University of Kentucky
Procurement Services

INVITATION FOR BIDS

CCK-2617.0-10-24
AG RESEARCH FACILITY 1 – BP 05 TEACHING GREENHOUSE
PROJECT # 2617.0
ADDENDUM # 1
11/13/2024

IMPORTANT: BID AND ADDENDUM MUST BE RECEIVED BY 12/03/2024 @ 3:00 P.M. LEXINGTON, KY TIME

Bidder must acknowledge receipt of this and any addendum as stated in the Invitation for Bids.

ITEM #1: BIDDER NOTICES

- Pursuant to KRS45A 183, Turner Construction Company declares its intention to bid on the General Trades package.

ITEM #2: CLARIFICATIONS AND MODIFICATIONS TO THE PROJECT DOCUMENTS

- Bidders are directed to review and incorporate the attached Addendum #1 from TCCO and BHDP into their offers.

OFFICIAL APPROVAL
UNIVERSITY OF KENTUCKY

Corey W. Leslie / (859) 257-9102

SIGNATURE

Typed or Printed Name

University of Kentucky
Procurement Services
322 Peterson Service Building
Lexington, KY 40506-0005

An Equal Opportunity University

UK AG Research Building
BID PACKAGE – 05 Teaching Greenhouse
ADDENDUM No. 1
CCK-2617.0-10-25
11/12/2024

TCCO Addendum #1 Items

Advertisement For Bid:

1. **Per KY Revised Statute (KRS45A_183) Turner Construction Company (Construction Manager) is notifying all potential bidders that it intends to competitively bid TC-026 General Trades as a self-perform package.**

Attachment B:

- **TC-026 General Trades:**
  - C. Scope Specific Items
    - ADD Item 36. – This contractor to provide and install Overhead Coiling Doors complete per the contract documents and specification section 08 3323.

Attachments Included:

- BHDP Addendum 01 – 20241108 – UK Teaching Greenhouse – Addendum 01
- Pre-Bid Meeting Powerpoint – CCK2617.0-10-25 Pre-bid Meeting BP-05 Teaching Greenhouse

Date	November 8, 2024
Project Title	University of Kentucky Agriculture Research Facility 1
To	All Plan Holders
Purpose	Modify the Bid Documents
Distribution	All Plan Holders University of Kentucky Turner Construction A/E Design Team

TO ALL BIDDERS: This Addendum modifies the Contract Documents and shall be taken into account in preparing bid proposals and shall become a part of the Contract Documents.

Specifications:

Item 1. 08 3323 – OVERHEAD COILING DOORS
- Added spec section for rolling service door at pesticide cabinet storage Closet GH0100.1.

Drawings:

Item 2. Sheet G002.3 – LIFE SAFETY FLOOR PLAN
- Updated plan to show pesticide cabinet storage Closet GH0100.1.

Item 3. Sheet L100.3 – TEACHING GREENHOUSE SITE LAYOUT
- Added dimensions to ramp/handrails.
- Added handrail on building side of ramp.
- Added reference to curb cuts/detections strips.

Item 4. Sheet L400.3 – LANDSCAPE DETAILS
- Added detail/dimensions for ramp and handrail.

Item 5. Sheet S003.3 - TYPICAL DETAILS
- Updated lintel schedule and typical lintel detail.

Item 6. Sheet S101.3 - FOUNDATION PLAN
- Added thickened slab under new non-load bearing wall.

Item 7. Sheet S401.3 – ELEVATIONS
- Added new opening in wall elevation.

Item 8. Sheet A101.3 – FIRST FLOOR PLAN
- Updated plan to show pesticide cabinet storage Closet GH0100.1, including overhead coiling door.
- Revised dimensions and partition tags.
- Added keynote 142 and added new wall section tag A8/A502.3.

Item 9. Sheet A401.3 – REFLECTED CEILING PLAN AND DETAILS
- Updated plan to show pesticide cabinet storage Closet GH0100.1.
- Added ceiling detail K13/A401.3

Item 10. Sheet A502.3 – WALL SECTIONS AND DETAILS
- Added sheet for wall section A8/A502.3 and section detail G8/A502.3.

Item 11. Sheet A801.3 - FINISH PLAN AND LEGEND
- Updated plan to show pesticide cabinet storage Closet GH0100.1.
- Added finish tag to Closet GH0100.1

Item 12. Sheet Q001.3 – LABORATORY SYMBOLS, NOTES AND LEGENDS
- Added Tall Cabinet Casework Type "G"

Item 13. Sheet Q110.3 – LABORATORY FIRST FLOOR PLAN
- Relocated Pesticide Cabinets.
- Modified Quantity of Heavy-Duty Shelving.
- Relocated OFOI Equipment.
- Modified Tall Cabinet Type A in Teaching Lab to Type G.

Item 14. Sheet Q210.3 – LABORATORY ELEVATIONS
- Modified Elevations to Reflect Floor Plan Updates.

Item 15. Sheet P110.3 – FIRST FLOOR – PLUMBING
- Added hose bibs in greenhouse compartments.

Item 16. Sheet M101.3 – TEACHING GREENHOUSE - MECHANICAL
- Added section view named "ROOF TOP UNIT SECTION".
- Added duct detectors to the inlet and outlet of RTU-1.
- Added an offset to the 12" DIA EA duct to avoid structural beam.
- Shifted the cabinet vent ductwork to coordinate with the new cabinet locations.

Item 17. Sheet E201.3 – TEACHING GREENHOUSE – FIRST FLOOR PLAN – POWER
- Revised Headhouse GH0108 to remove wiremold on plan east wall.
- Added two (2) receptacles to plan east wall.

Item 18. Sheet E301.3 – TEACHING GREENHOUSE – FIRST FLOOR PLAN – FIRE ALARM
- Added fire alarm devices in CER 4C (FRUITS) GH0120 and CER 4C (FLORAL) GH0122.

Item 19. Prospiant Greenhouse Drawings
- Provided for reference only.

Respectfully Submitted,

Kelly Gardner

Kelly Gardner
Senior Architect
BHDP Architecture

ATTACHMENTS

1. Specification 08 3323 – OVERHEAD COILING DOORS_ADD-1
2. Sheet G002.3 – LIFE SAFETY FLOOR PLAN_ADD-1
3. Sheet L100.3 – TEACHING GREENHOUSE SITE LAYOUT_ADD-1
4. Sheet L400.3 – LANDSCAPE DETAILS_ADD-1

5. Sheet S003.3 - TYPICAL DETAILS_ADD-1
6. Sheet S101.3 - FOUNDATION PLAN_ADD-1
7. Sheet S401.3 – ELEVATIONS_ADD-1
8. Sheet A101.3 – FIRST FLOOR PLAN_ADD-1
9. Sheet A401.3 – REFLECTED CEILING PLAN AND DETAILS_ADD-1
10. Sheet A502.3 – WALL SECTIONS AND DETAILS_ADD-1
11. Sheet A801.3 – FINISH PLAN AND LEGEND_ADD-1
12. Sheet Q001.3 – LABORATORY SYMBOLS, NOTES AND LEGENDS_ADD-1
13. Sheet Q110.3 – LABORATORY FIRST FLOOR PLAN_ADD-1
14. Sheet Q210.3 – LABORATORY ELEVATIONS_ADD-1
15. Sheet P110.3 – FIRST FLOOR – PLUMBING_ADD-1
16. Sheet M101.3 – TEACHING GREENHOUSE - MECHANICAL_ADD-1
17. Sheet E201.3 – TEACHING GREENHOUSE – FIRST FLOOR PLAN – POWER_ADD-1
18. Sheet E301.3 – TEACHING GREENHOUSE – FIRST FLOOR PLAN – FIRE ALARM_ADD-1
19. 20241031 - Prospiant Teaching Greenhouse Drawings – For Reference

END OF ADDENDUM 1

SECTION 08 3323
OVERHEAD COILING DOORS

PART 1 - GENERAL

1.1 SUMMARY

A. Section Includes:

1. Service overhead coiling doors.

1.2 ACTION SUBMITTALS

A. Product Data: For each type and size of overhead coiling door and accessory.

1. Include construction details, material descriptions, dimensions of individual components, profiles for slats, and finishes.

B. Shop Drawings: For each installation and for special components not dimensioned or detailed in manufacturer's product data.

1. Include plans, elevations, sections, and mounting details.
2. Include details of equipment assemblies, and indicate dimensions, required clearances, method of field assembly, components, and location and size of each field connection.
3. Include points of attachment and their corresponding static and dynamic loads imposed on structure.

C. Samples for Verification: For each type of exposed finish on the following components, in manufacturer's standard sizes:

1. Curtain slats.
2. Bottom bar.
3. Guides.
4. Brackets.
5. Hood.
6. Locking device(s).
7. Include similar Samples of accessories involving color selection.

1.3 INFORMATIONAL SUBMITTALS

A. Qualification Data: For Installer.

B. Sample Warranty: For special warranty.

1.4 CLOSEOUT SUBMITTALS

A. Special warranty.

B. Maintenance Data: For overhead coiling doors to include in maintenance manuals.

1.5 QUALITY ASSURANCE

A. Installer Qualifications: An entity that employs installers and supervisors who are trained and approved by manufacturer for both installation and maintenance of units required for this Project.

1.6 WARRANTY

A. Special Warranty: Manufacturer agrees to repair or replace components of doors that fail in materials or workmanship within specified warranty period.

1. Warranty Period: Two years from date of Substantial Completion.

PART 2 - PRODUCTS

2.1 SOURCE LIMITATIONS

A. Obtain overhead coiling doors from single source from single manufacturer.

1. Obtain operators and controls from overhead coiling-door manufacturer.

2.2 DOOR ASSEMBLY

A. Overhead Coiling Door: Service overhead coiling door formed with curtain of interlocking metal slats.

1. Basis-of-Design Product: Subject to compliance with requirements, provide Wayne Dalton; Rolling Steel Service Door, Model 926 or comparable product by one of the following:

a. C.H.I. Overhead Doors, Inc.
b. Cornell; a CornellCookson company
c. McKeon Door Company
d. Overhead Door Corporation
e. Wayne Dalton; a division of Overhead Door Corporation

B. Operation Cycles: Door components and operators capable of operating for not less than 20,000 cycles. One operation cycle is complete when a door is opened from the closed position to the fully open position and returned to the closed position.

C. Door Curtain Material: Galvanized steel.

D. Door Curtain Slats: Flat profile slats of 1-7/8-inch center-to-center height.

E. Bottom Bar: Two angles, each not less than 1-1/2 by 1-1/2 by 1/8 inch thick; fabricated from hot-dip galvanized steel and finished to match door.

F. Curtain Jamb Guides: Galvanized steel with exposed finish matching curtain slats.

G. Hood: Match curtain material and finish.

1. Shape: Round.
2. Mounting: Face of wall.

H. Locking Devices: Equip door with slide bolt for padlock and chain lock keeper.

I. Manual Door Operator: Chain-hoist operator.

J. Curtain Accessories: Equip door with astragal.

K. Door Finish:

1. Baked-Enamel or Powder-Coated Finish: Color as selected by Architect from manufacturer's full range.

2.3 DOOR CURTAIN MATERIALS AND CONSTRUCTION

A. Door Curtains: Fabricate overhead coiling-door curtain of interlocking metal slats, designed to withstand wind loading indicated, in a continuous length for width of door without splices. Unless otherwise indicated, provide slats of thickness and mechanical properties recommended by door manufacturer for performance, size, and type of door indicated, and as follows:

1. Steel Door Curtain Slats: Zinc-coated (galvanized), cold-rolled structural-steel sheet; complying with ASTM A653/A653M, with **G90** zinc coating; nominal sheet thickness (coated) of **0.028 inch**; and as required.
2. Metal Interior Curtain-Slat Facing: Match metal of exterior curtain-slat face .

B. Curtain Jamb Guides: Manufacturer's standard angles or channels and angles of same material and finish as curtain slats unless otherwise indicated, with sufficient depth and strength to retain curtain, to allow curtain to operate smoothly, and to withstand loading. Slot bolt holes for guide adjustment. Provide removable stops on guides to prevent overtravel of curtain.

2.4 HOODS

A. General: Form sheet metal hood to entirely enclose coiled curtain and operating mechanism at opening head. Contour to fit end brackets to which hood is attached. Roll and reinforce top and bottom edges for stiffness. Form closed ends for surface-mounted hoods and fascia for any portion of between-jamb mounting that projects beyond wall face. Equip hood with intermediate support brackets as required to prevent sagging.

1. Galvanized Steel: Nominal **0.028-inch-** thick, hot-dip galvanized-steel sheet with **G90** zinc coating, complying with ASTM A653/A653M.

2.5 LOCKING DEVICES

A. Slide Bolt: Fabricate with side-locking bolts to engage through slots in tracks for locking by padlock, located on both left and right jamb sides, operable from coil side.

B. Chain Lock Keeper: Suitable for padlock.

2.6 CURTAIN ACCESSORIES

A. Astragal for Interior Doors: Equip each door bottom bar with a replaceable, adjustable, continuous, compressible gasket of flexible vinyl, rubber, or neoprene as a cushion bumper.

2.7 COUNTERBALANCE MECHANISM

A. General: Counterbalance doors by means of manufacturer's standard mechanism with an adjustable-tension, steel helical torsion spring mounted around a steel shaft and contained in a spring barrel connected to top of curtain with barrel rings. Use grease-sealed bearings or self-lubricating graphite bearings for rotating members.

B. Counterbalance Barrel: Fabricate spring barrel of manufacturer's standard hot-formed, structural-quality, seamless or welded carbon-steel pipe, of sufficient diameter and wall thickness to support rolled-up curtain without distortion of slats and to limit barrel deflection to not more than **0.03 in./ft.** of span under full load.

C. Counterbalance Spring: One or more oil-tempered, heat-treated steel helical torsion springs. Size springs to counterbalance weight of curtain, with uniform adjustment accessible from outside barrel. Secure ends of springs to barrel and shaft with cast-steel barrel plugs.

D. Torsion Rod for Counterbalance Shaft: Fabricate of manufacturer's standard cold-rolled steel, sized to hold fixed spring ends and carry torsional load.

E. Brackets: Manufacturer's standard mounting brackets of either cast iron or cold-rolled steel plate.

2.8 MANUAL DOOR OPERATORS

A. General: Equip door with manual door operator by door manufacturer.

B. Chain-Hoist Operator: Consisting of endless steel hand chain, chain-pocket wheel and guard, and gear-reduction unit with a maximum 25-lbf force for door operation. Provide alloy-steel hand chain with chain holder secured to operator guide.

2.9 GENERAL FINISH REQUIREMENTS

A. Comply with NAAMM/NOMMA 500 for recommendations for applying and designating finishes.

B. Appearance of Finished Work: Noticeable variations in same piece are not acceptable. Variations in appearance of adjoining components are acceptable if they are within the range of approved Samples and are assembled or installed to minimize contrast.

2.10 STEEL AND GALVANIZED-STEEL FINISHES

A. Baked-Enamel or Powder-Coat Finish: Manufacturer's standard baked-on finish consisting of prime coat and thermosetting topcoat. Comply with coating manufacturer's written instructions for cleaning, pretreatment, application, and minimum dry film thickness.

PART 3 - EXECUTION

3.1 EXAMINATION

A. Examine substrates areas and conditions, with Installer present, for compliance with requirements for substrate construction and other conditions affecting performance of the Work.

B. Proceed with installation only after unsatisfactory conditions have been corrected.

3.2 INSTALLATION, GENERAL

A. Install overhead coiling doors and operating equipment complete with necessary hardware, anchors, inserts, hangers, and equipment supports; according to manufacturer's written instructions and as specified.

B. Install overhead coiling doors, hoods, controls, and operators at the mounting locations indicated for each door.

C. Accessibility: Install overhead coiling doors, switches, and controls along accessible routes in compliance with the accessibility standard.

3.3 STARTUP SERVICE

A. Engage a factory-authorized service representative to perform startup service.

1. Complete installation and startup checks according to manufacturer's written instructions.
2. Test and adjust controls and safety devices. Replace damaged and malfunctioning controls and equipment.

3.4 ADJUSTING

A. Adjust hardware and moving parts to function smoothly so that doors operate easily, free of warp, twist, or distortion.

B. Lubricate bearings and sliding parts as recommended by manufacturer.

3.5 DEMONSTRATION

A. Engage a factory-authorized service representative to train Owner's maintenance personnel to adjust, operate, and maintain overhead coiling doors.

END OF SECTION 08 3323

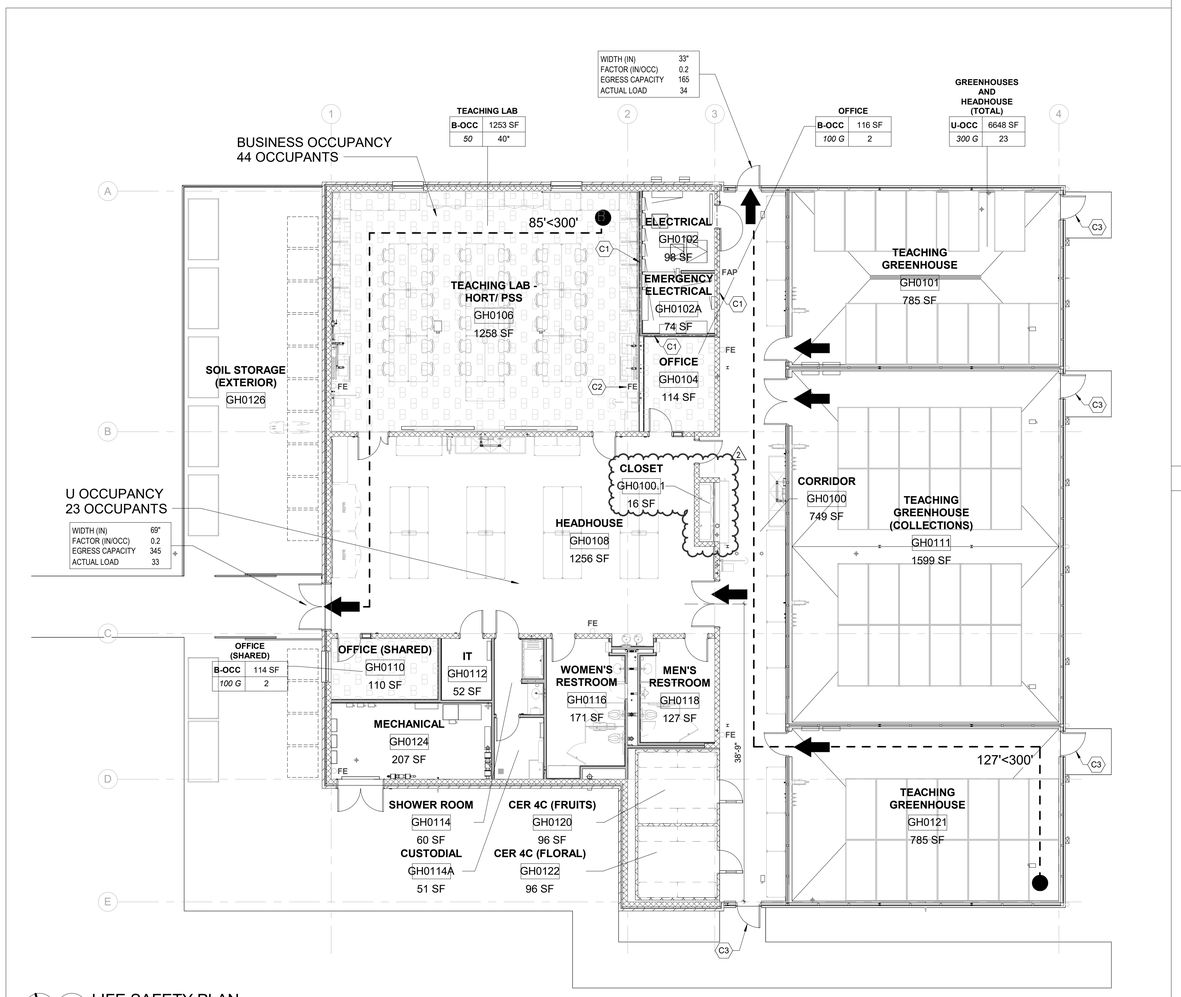

A13 G002.3 LIFE SAFETY PLAN
1/8" = 1'-0"

SHEET KEYNOTES

C1 1 HOUR RATED FIRE BARRIER

C2 FIRE EXTINGUISHER INSIDE OF RECESSED CABINET. REFER TO LAB EQUIPMENT FOR INFORMATION REGARDING THE SAFETY SHOWER WITH INCLUDED RECESSED FIRE EXTINGUISHER CABINET.

C3 PROVIDE VINYL DOOR SIGNAGE TO INDICATE DOOR IS NOT AN EMERGENCY EXIT.

LIFE SAFETY LEGEND

1-HR RATED FIRE BARRIER

ROOM / AREA NAME — SQUARE FOOTAGE
OCC. — OCCUPANCY TYPE
100G — OCCUPANT LOAD PER SF (N-NET/G-GROSS)
OCCUPANT LOAD (ASTERISK (*) INDICATES ACTUAL OCCUPANTS USED)

BUSINESS OCCUPANCY (B)

UTILITY OCCUPANCY (U)

PATH OF EGRESS TRAVEL

EXIT

000'<000' ACTUAL TRAVEL DISTANCE (FT) < ALLOWABLE TRAVEL DIST (FT)

WIDTH (IN) 0"
FACTOR (IN/OCC) 0.2
EGRESS CAPACITY 0
ACTUAL LOAD 0
EGRESS COMPONENT CALCULATIONS

0 SHEET NOTE

FE FIRE EXTINGUISHER ON BRACKET

FAP FIRE ALARM PANEL

University of Kentucky

No.	Issue/Revision/Submission	Date
2	ADDENDUM 1	11.08.2024
1	BID AND PERMIT	10.11.2024

Flad Architects
MADISON
644 SCIENCE DR.
MADISON, WI 53711
PHONE 608.238.9661
WWW.FLAD.COM

BHDP
COLUMBUS
214 MARCONI BLVD.
SUITE 200
COLUMBUS, OHIO 43215
PHONE 614.486.1900

BC&E ENGINEERING: DAYTON, OH
DELMAX CONSTRUCTION: URBANA, OH
TERRACON: LEXINGTON, KY

CMTA INC: LEXINGTON, KY
THP LIMITED INC: CINCINNATI, OH
NV5: PITTSBURGH, PA
BELL ENGINEERING: HOPKINSVILLE, KY
VIBRASURE: SAN FRANCISCO, CA

UNIVERSITY OF KENTUCKY
TEACHING GREENHOUSE
1421 UNIVERSITY DR. LEXINGTON, KENTUCKY 40503
LIFE SAFETY FLOOR PLAN

Project Manager: A. MEDINA
Drawn: K. GARDNER
Checked: K. DENMAN
Initial Drawing Date: 10.11.2024
Project Number: UKX05.00

G002.3

This document is the product and property of Baxter Hodell Donnelly Preston, Inc. Neither the document nor the information it contains may be copied or used for other than the specific project for which it was prepared without the written consent of Baxter Hodell Donnelly Preston, Inc.

Revit Template Version 2021

Autodesk Docs://UKX0500 University of Kentucky - Ag Research Facility 1/UKX0500-R23-B3-TEACHING-GREENHOUSE-ARCH.rvt — 11/7/2024 9:53:25 AM

Revit Template Version 2021

Copyright of Flad and Associates and may not be used in any way on any project other than the specific project for which it was prepared without the written consent of Flad and Associates. Copyright ©

15" CONC. WALL

RAMP AND HANDRAIL
SEE DETAIL A B, L400.3

POST MOUNTED HANDRAIL
SEE DETAIL A, L400.3

DOUBLE LEAF GATE
SEE DETAIL B, L300.3

CURB AND GUTTER ARE IN THE C&S PACKAGE
NOT INCLUDED IN TEACHING GREENHOUSE

POST MOUNTED HANDRAIL
NOT TO EXCEED PAST CORNER
OF BUILDING

PERIMETER SIDEWALK
TYP. DIMENSION

8' HIGH PERIMETER FENCE
SEE DETAIL A, L300.3

8' WIDE SLIDING GATE.
FIXED END AT BUILDING
SEE DETAIL D L300.3

FENCE TO BE 3' MIN.
OFFSET FROM SIDEWALK

TRENCH DRAIN
SEE SHEET C400.3

HEAVY DUTY CONCRETE
SEE PAVING SCHEDULE
DETAIL D, L300.3

LIGHT DUTY CONCRETE
SEE PAVING SCHEDULE
DETAIL D, L300.3

KEY	DESCRIPTION	LEGEND	DETAILS
	CONCRETE SIDEWALK	1	E – L300.3
	ADA RAMP WITH DETECTOR STRIP	2	C – L300.3
	GREEN SPACE/LANDSCAPE BED		
	EXPANSION JOINT		
	HEAVY DUTY CONCRETE	3	E – L300.3
	GRAVEL STRIP	4	F – L300.3
	RETAINING WALL W/ HANDRAIL	5	A – L400.3
	RETAINING WALL ELEVATION	6	B – L400.3
	HANDRAIL		B – L400.3

TEACHING GREENHOUSE SITE LAYOUT

SCALE: 1" = 10'

University of Kentucky

No.	Issue/Revision/Submission	Date
A	ADDENDUM 1	11.08.2024
	BID AND PERMIT	10.11.2024

Flad Architects
MADISON
644 SCONCE DR
PHONE 608.836.2811
WWW.FLADARCH.COM

BHDP
COLUMBUS
274 MARCONI BLVD.
SUITE 200
COLUMBUS, OHIO 43215
PHONE 614.481.6900

CMTA INC: LEXINGTON, KY
THP LIMITED INC: CINCINNATI, OH
KEL: PITTSBURGH, PA
KEL: ELIZABETHTOWN, HOPKINSVILLE, KY
VIBRASURE: SAN FRANCISCO, CA

UNIVERSITY OF KENTUCKY
AGRICULTURE RESEARCH FACILITY 1
1421 UNIVERSITY DR. LEXINGTON, KENTUCKY 40503

TEACHING GREENHOUSE
SITE LAYOUT

STATE OF KENTUCKY
THOMAS R. HARPER III
17315
PROFESSIONAL ENGINEER
10/11/24

Project Manager: R. HARPER
Drawn: T. MCKINLEY
Checked: R. HARPER
Initial Drawing Date: 10.11.2024
Project Number: UKX05.00

L100.3

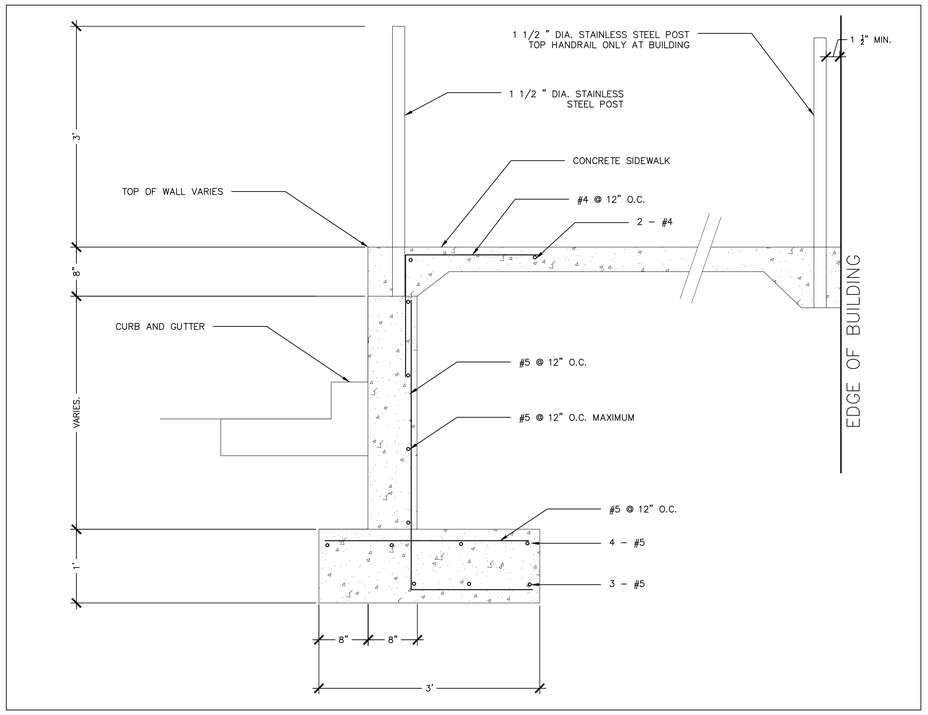

A RETAINING WALL W/ HANDRAIL
N.T.S.

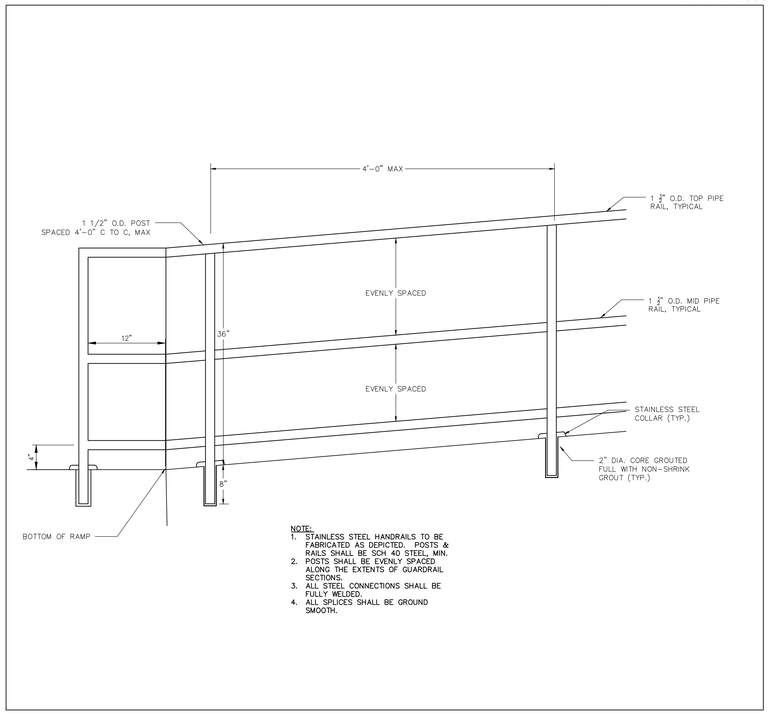

NOTE:
1. STAINLESS STEEL HANDRAILS TO BE FABRICATED AS DEPICTED. POSTS & RAILS SHALL BE SCH 40 STEEL, MIN.
2. POSTS SHALL BE EVENLY SPACED ALONG THE EXTENTS OF GUARDRAIL SECTIONS.
3. ALL STEEL CONNECTIONS SHALL BE FULLY WELDED.
4. ALL SPLICES SHALL BE GROUND SMOOTH.

C HANDRAIL
N.T.S.

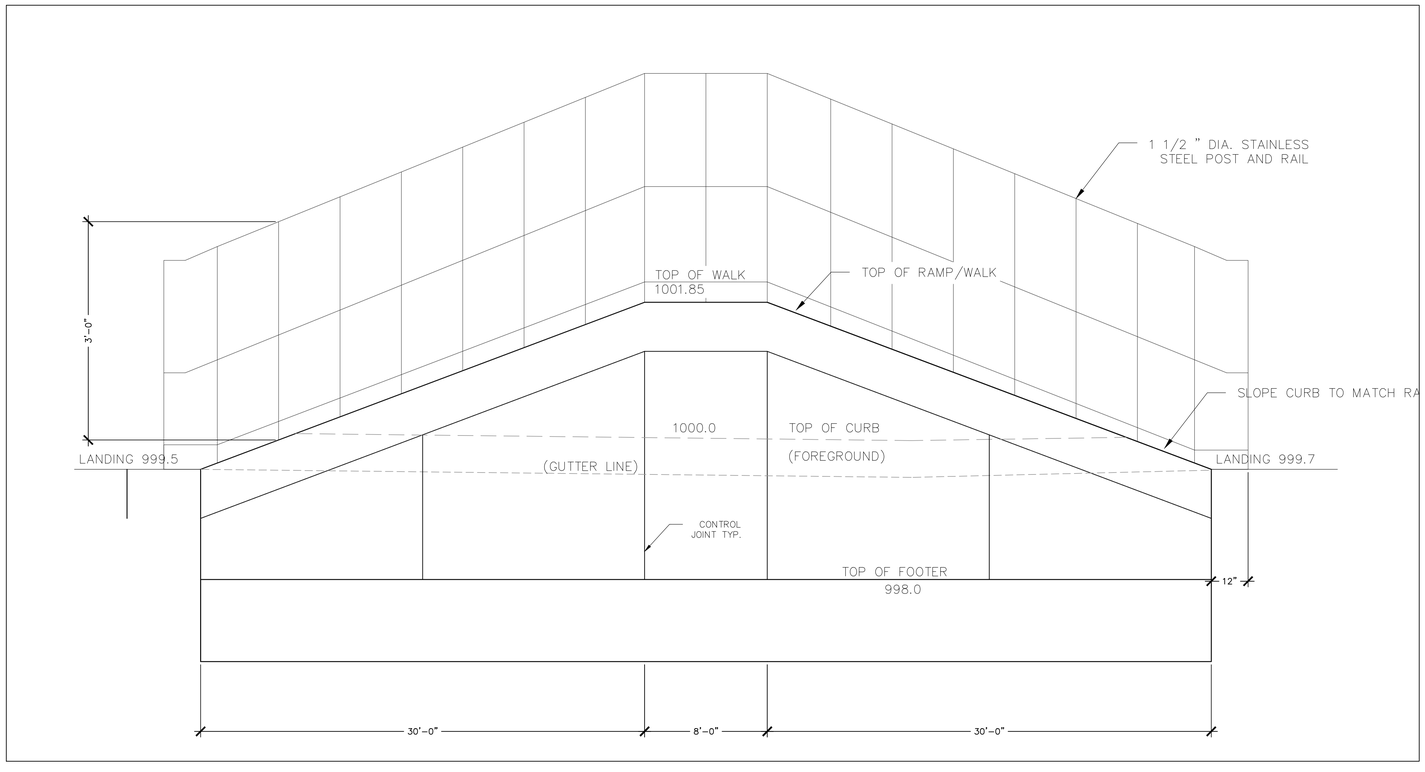

B RETAINING WALL ELEVATION
N.T.S.

University of Kentucky

No.	Issue/Revision/Submission	Date
A	BID AND PERMIT	11.08.2024
	ADDENDUM 1	10.11.2024

BHDP COLUMBUS
271 MARCONI BLVD.
SUITE 200
COLUMBUS, OHIO 43215
PHONE 614.486.1950

Flad Architects MADISON
644 SCIENCE DR.
MADISON, WI 53711
PHONE 608.238.7661
WWW.FLAD.COM

CMTA INC: LEXINGTON, KY
THP LIMITED INC: CINCINNATI, OH
NV5: PITTSBURGH, PA
BELL ENGINEERING: HOPKINSVILLE, KY
VIBRASURE: SAN FRANCISCO, CA

BC&E ENGINEERING: DAYTON, OH
DELMAX CONSTRUCTION: URBANA, OH
TERRACON: LEXINGTON, KY
FLAD: MADISON, WI

UNIVERSITY OF KENTUCKY
AGRICULTURE RESEARCH FACILITY 1
1421 UNIVERSITY DR. LEXINGTON, KENTUCKY 40503

LANDSCAPE DETAILS

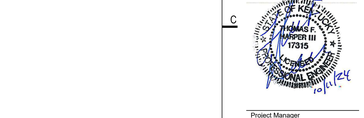

Project Manager
R. HARPER
Drawn
T. MCKINLEY
Checked
R. HARPER
Initial Drawing Date
10.11.2024
Project Number
UKX05.00

L400.3

3/6/2024 3:27:43 PM

copied or used for other than the specific project for which it was prepared without the written consent of Baxter Hodell Donnelly Preston, Inc.

Revit Template Version 2021

Revit Template Version 2021

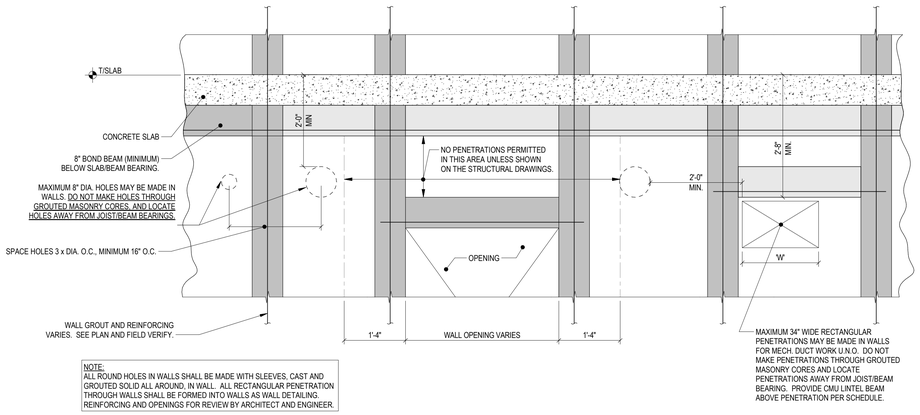

NOTE:
ALL ROUND HOLES IN WALLS SHALL BE MADE WITH SLEEVES, CAST AND GROUTED SOLID ALL AROUND, IN WALL. ALL RECTANGULAR PENETRATION THROUGH WALLS SHALL BE FORMED INTO WALLS AS WALL DETAILING. REINFORCING AND OPENINGS FOR REVIEW BY ARCHITECT AND ENGINEER.

GUIDELINES FOR CMU WALL PENETRATIONS

CMU LINTEL SCHEDULE AT MECH. DUCT PENETRATIONS

WALL PENETRATION WIDTH 'W'	LINTEL BEAM DEPTH	LINTEL BEAM REINFORCING	
		LONGITUDINAL	STIRRUPS
LESS THAN 9"	NOT REQUIRED	-	-
9"<W≤16"	8"	(2) # 5 BOT.	-
16"<W≤24"	16"	(2) # 5 BOT. (1) # 5 TOP	#4 AT 16" O.C. W/ 180° HOOKS E.E
24"<W≤34"	16"	(2) # 5 BOT. (1) # 5 TOP	#4 AT 8" O.C. W/ 180° HOOKS E.E.

NOTE: LINTEL SCHEDULE APPLIES FOR ALL MECHANICAL DUCT PENETRATIONS UNLESS NOTED OTHERWISE ON PLAN. WALL PENETRATION SIZE IS DUCT SIZE +/- 2". CONFIRM SIZE WITH MEP BEFORE WALL PLACEMENT. LINTEL TO SPAN BETWEEN REINFORCED, GROUTED, VERTICAL CORES NOTED ON PLAN, REGADLESS OF WALL PENETRATION SIZE, WITH 8" MIN. BEARING EACH END.

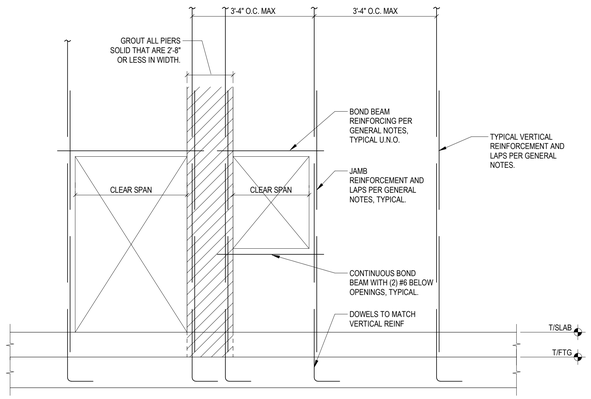

TYPICAL CMU WALL REINFORCING

BEAM BEARING PLATE SCHEDULE

BEAM SIZE	BEARING PLATE
BP-1	6" x 12" x 1/2"

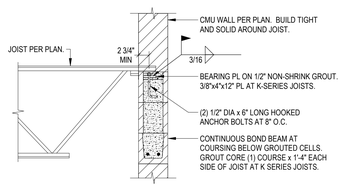

TYPICAL JOIST BEARING ON CMU

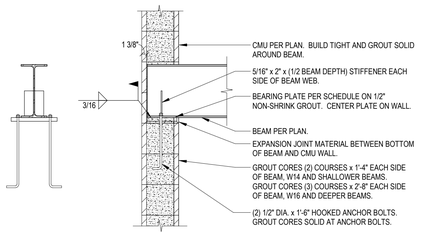

BEAM PERPENDICULAR TO WALL

TYPICAL STEEL BEAM BEARING ON CMU

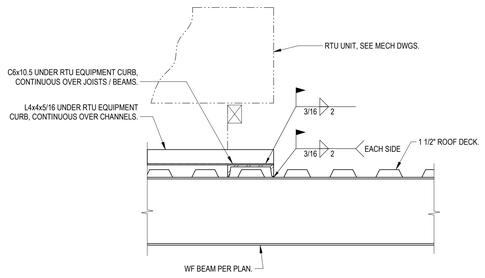

RTU SUPPORT FRAME

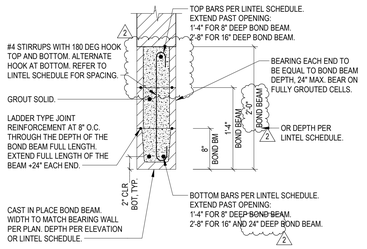

TYPICAL BOND BEAM DETAIL

LINTEL SCHEDULE

MARK	DEPTH	BOT BARS	TOP BARS	STIRRUP SPACING
L-1	8"	(2) #5	(1) #5	16" O.C.
L-2	16"	(2) #5	(1) #5	16" O.C.
L-3	24"	(2) #5	(1) #5	16" O.C.

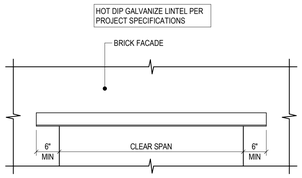

ELEVATION

NOTES:
1. EXTERIOR LINTELS SHALL BE HOT-DIPPED GALVANIZED.
2. LINTELS SHALL HAVE MINIMUM BEARING EACH END OF 1" PER FOOT OF OPENING (6" MINIMUM), EXCEPT AS DETAILED.
3. BEAR LINTELS ON 8" DEEP SOLID MASONRY.
4. NOTIFY ENGINEER IF LINTEL IS LOCATED IN BEARING WALL.

LOOSE LINTEL SCHEDULE

FOR 4" NON-BEARING MASONRY FACADE OR INTERIOR PARTITION WALL. PROVIDE THE FOLLOWING, WITH 3 1/2" LEG HORIZONTAL:

SPAN	ANGLE SIZE
0'-0" TO 4'-0"	L3X3 1/2X3/8
4'-1"- TO 5'-6"	L4X3 1/2X3/8
5'-7" TO 7'-6"	L5X3 1/2X3/8

TYPICAL LOOSE LINTEL IN NON-BEARING WALL

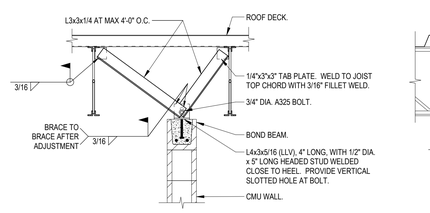

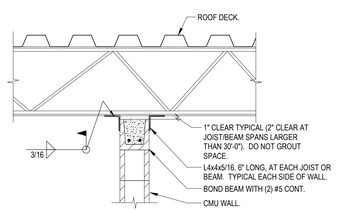

TOP OF CMU WALL SUPPORT AT STEEL JOISTS AND BEAMS AT ROOF

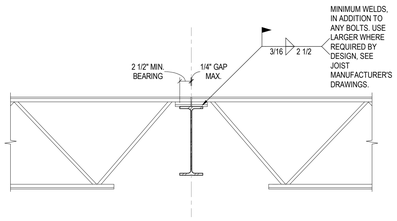

K-JOIST CONNECTION TO BEAM

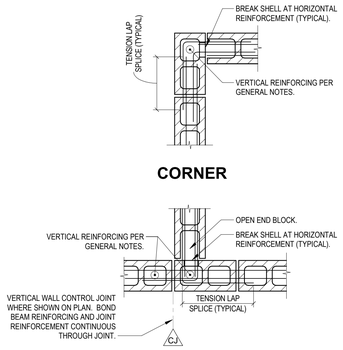

TYPICAL BARS AT CMU WALL CORNERS AND INTERSECTIONS

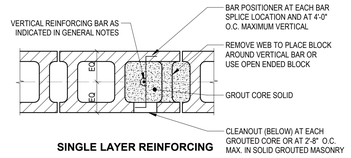

SINGLE LAYER REINFORCING

LAP SPLICE ALL REINFORCING PER GENERAL NOTES, U.N.O. ALTERNATIVELY, USE MECHANICAL CONNECTORS FOR REINFORCING BARS WHICH DEVELOP 125% OF YIELD STRENGTH OF BARS IN TENSION. SUBMIT MECHANICAL CONNECTORS, IF USED, FOR ENGINEER REVIEW.

REINFORCING IN MASONRY

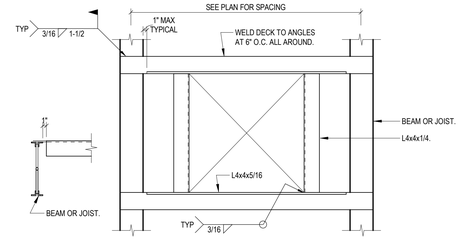

NOTES:
1. FOR LOADS NOT EXCEEDING 500 POUNDS.
2. REFER TO ARCH AND MECH DRAWINGS FOR SIZE AND LOCATIONS OF OPENINGS.
3. FOR OPENINGS SMALLER THAN 12"x12", REFER TO SPECIFICATION SECTION 053000 FOR REINFORCING OF ROOF DECK.
4. MAXIMUM OPENING SIZE: 4'-0"x4'-0".
5. BID TO BE BASED ON FABRICATING AND INSTALLING 4 ROOF OPENING FRAMES. SHOW OPENINGS ON SHOP DRAWINGS.

ROOF OPENING FRAME

This document is the product and property of Baxter Hodell Donnelly Preston, Inc. Neither the document nor the information it contains may be copied or used for other than the specific project for which it was prepared without the written consent of Baxter Hodell Donnelly Preston, Inc.

University of Kentucky

11.08.2024 2 ADDENDUM 1
10.11.2024 1 BID AND PERMIT
Date No. Issue/Revision/Submission

Flad Architects
MADISON
644 SCIENCE DR.
MADISON, WI 53711
PHONE 608.358.3661
WWW.FLADARCH.COM

BHDP
COLUMBUS
274 MARCONI BLVD.
SUITE 200
COLUMBUS, OHIO 43215
PHONE 614.481.6080
FAX 614.481.6090

BCAE ENGINEERING: DAYTON, OH
DELMAX CONSTRUCTION: URBANA, OH
TERRACON: LEXINGTON, KY
FLAD: MADISON, WI

CMTA INC: LEXINGTON, HY
THP LIMITED INC: CINCINNATI, OH
NV5: PITTSBURGH, PA
BELL ENGINEERING: HOPKINSVILLE, KY
VIBRASURE: SAN FANSISCO, CA

UNIVERSITY OF KENTUCKY
TEACHING GREENHOUSE
1421 UNIVERSITY DR. LEXINGTON, KENTUCKY 40503

TYPICAL DETAILS

Project Manager: SJD
Drawn: MRB
Checked: BCS
Initial Drawing Date: 10.11.2024
Project Number: UKX05.00

S003.3

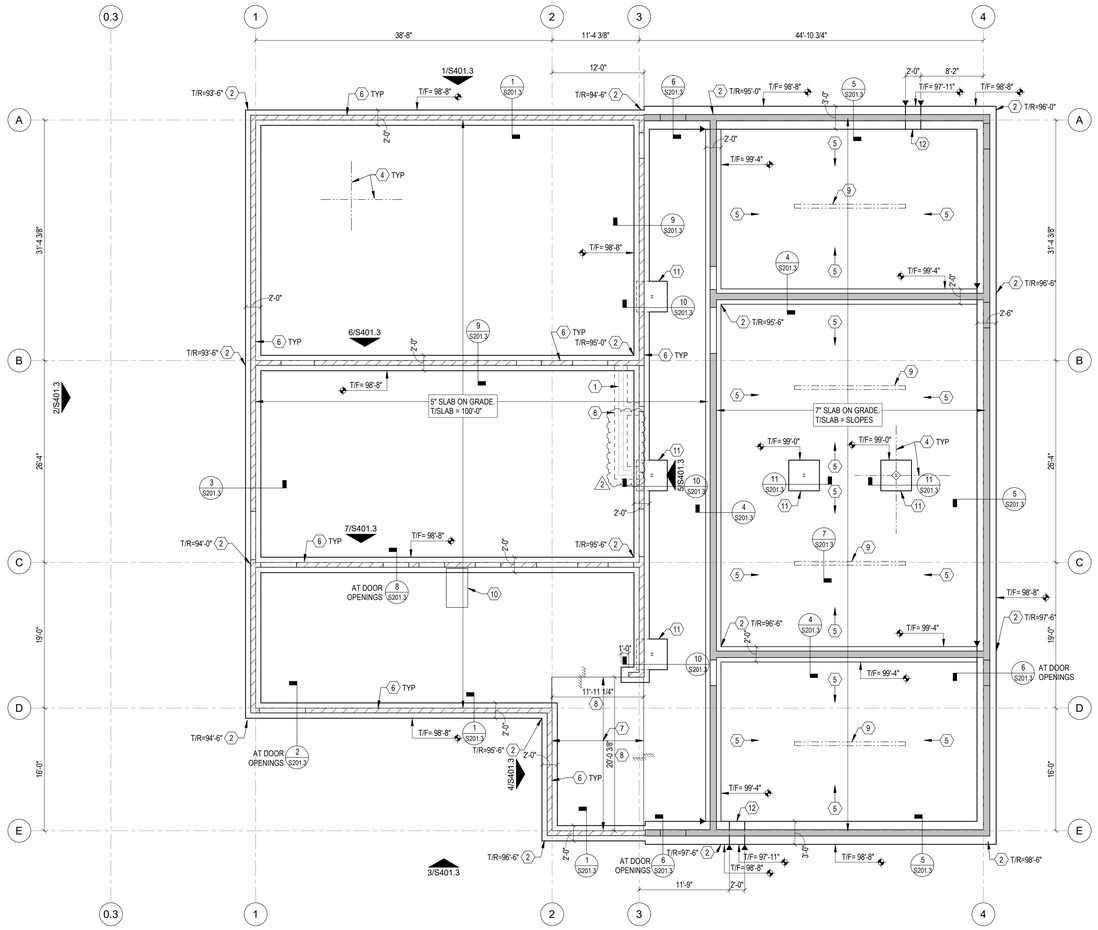

1 S101.3 T/SLAB = 100'-0" U.N.O.

FOUNDATION PLAN

1/8" = 1'-0"

NORTH

DRAWING NOTES:

1. REFER TO S000 SERIES FOR GENERAL STRUCTURAL NOTES, ABBREVIATIONS, AND TYPICAL DETAILS.
2. REFER TO S200 SERIES FOR FOUNDATION DETAILS.
3. REFER TO S300 SERIES FOR FRAMING DETAILS.
4. DATUM ELEVATION 1001.5' = 100'-0"

FOUNDATION KEY NOTES:

1. THICKENED SLAB AT INTERIOR CMU WALL PER TYPICAL DETAIL. REFER TO ARCH FOR EXTENTS OF INTERIOR CMU WALLS.
2. PROVIDE BACK FILL CONCRETE BETWEEN T/ROCK AND BOTTOM OF FOOTING. FOR BIDDING PURPOSES ESTIMATED T/ROCK ELEVATION IS PROVIDED FOR EACH FOOTING, ACTUAL T/ROCK MAY VARY.
3. 8" NON-LOAD CMU WALLS. BRACE TOP OF WALLS PER TYPICAL DETAILS.
4. SLAB ON GRADE CONTROL JOINT PER ARCH DRAWING LAYOUT. REFER TO TYPICAL DETAILS ON S002.
5. SLAB ON GRADE TO BE SLOPED TO DRAIN. SLAB IS 5" THICK AT DRAIN AND 7" THICK AT HIGHPOINTS (PERIMETER OF ROOMS AND BETWEEN TRENCH DRAINS). REFER TO ARCH AND PLUMBING FOR DRAIN LOCATIONS.
6. 8" CMU WALL. REINFORCE PER CMU WALL ELEVATIONS.
7. SLAB DEPRESSION AT COOLERS. T/SLAB = 99'-7 1/2".
8. DIMENSIONS OF SLAB DEPRESSION. VERIFY EXTENTS SHOWN ALIGN WITH COLD ROOM DIMENSIONS AND ARCHITECTURAL DETAILS.
9. TRENCH DRAIN PER ARCH.
10. SLAB DEPRESSION AT SHOWERS. T/SLAB = 99'-11".
11. 18" THICK BY 4'-0" X 4'-0" SPREAD FOOTING FOR GREENHOUSE COLUMN. REINFORCE WITH (6)#5 E.W. TOP AND BOTTOM, HOOKED EACH END. CONFIRM GREENHOUSE COLUMN LOCATIONS WITH GREENHOUSE DRAWINGS.
12. FOOTING STEP TO ACCOMMODATE BELOW SLAB DRAIN LINE. COORDINATE WITH PLUMBING DRAWINGS.

FOUNDATION PLAN LEGEND:

	SLAB STEP
▼	FOOTING STEP
▽	WALL CONTROL JOINT
T/F=XXX'-XX"	INDICATES TOP OF FOOTING ELEVATION
T/R=XXX'-XX"	INDICATES ESTIMATED TOP OF ROCK ELEVATION

University of Kentucky

No.	Issue/Revision/Submission	Date
2	ADDENDUM 1	11.08.2024
1	BID AND PERMIT	10.11.2024

BHDP COLUMBUS
274 MARCONI BLVD.
SUITE 200
COLUMBUS, OHIO 43215
PHONE 614.486.1960

Flad Architects
MADISON
644 SCIENCE DR.
MADISON, WI 53711
PHONE 608.238.2661
WWW.FLAD.COM

BC&E ENGINEERING: DAYTON, OH
DELMAX CONSTRUCTION: URBANA, OH
TERRACON: LEXINGTON, KY
FLAD: MADISON, WI

CMTA INC: LEXINGTON, HY
THP LIMITED INC: CINCINNATI, OH
NV5: PITTSBURGH, PA
BELL ENGINEERING: HOPKINSVILLE, KY
VIBRASURE: SAN FANSISCO, CA

UNIVERSITY OF KENTUCKY
TEACHING GREENHOUSE
1421 UNIVERSITY DR. LEXINGTON, KENTUCKY 40503

FOUNDATION PLAN

STATE OF KENTUCKY
BRAD C. SAALFELD
26869
LICENSED
PROFESSIONAL ENGINEER

Project Manager: SJD
Drawn: MRB
Checked: BCS
Initial Drawing Date: 10.11.2024
Project Number: UKX05.00

S101.3

This document is the product and property of Baxter Hodell Donnelly Preston, Inc. Neither the document nor the information it contains may be copied or used for other than the specific project for which it was prepared without the written consent of Baxter Hodell Donnelly Preston, Inc.

Revit Template Version 2021

Autodesk Docs://UKX0500 University of Kentucky - Ag Research Facility 1/UKX0500-R23-B3-TEACHING-GREENHOUSE-STRUCT.rvt — 11/6/2024 3:22:37 PM

Revit Template Version 2021

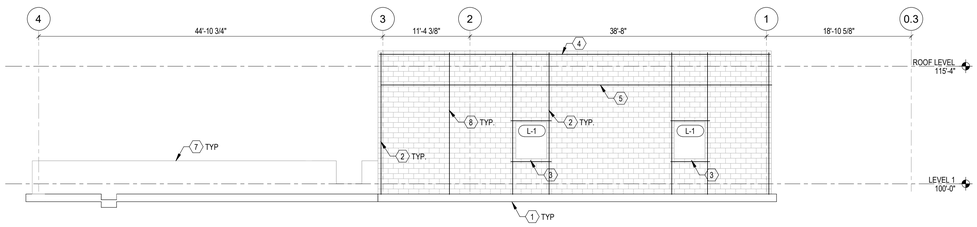

LINE A (LOOKING SOUTH)
1 ELEVATION
S401.3 — 1/8" = 1'-0"

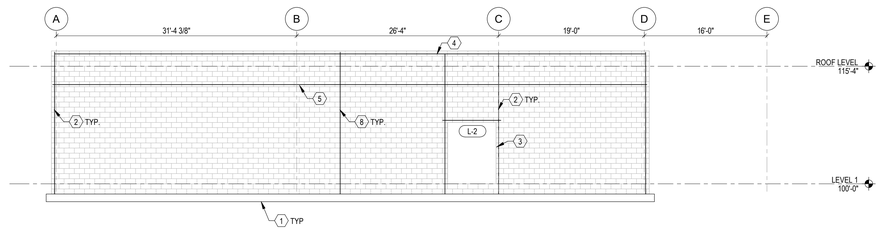

LINE 1 (LOOKING EAST)
2 ELEVATION
S401.3 — 1/8" = 1'-0"

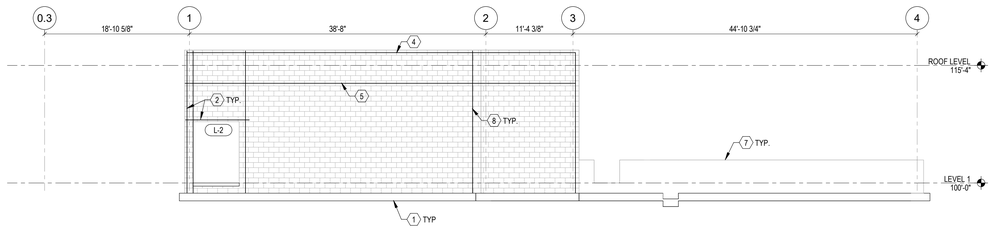

LINE D/E (LOOKING NORTH)
3 ELEVATION
S401.3 — 1/8" = 1'-0"

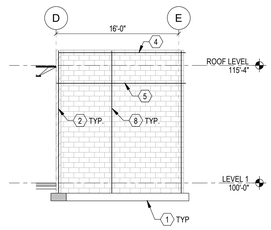

LINE 2 (LOOKING WEST)
4 ELEVATION
S401.3 — 1/8" = 1'-0"

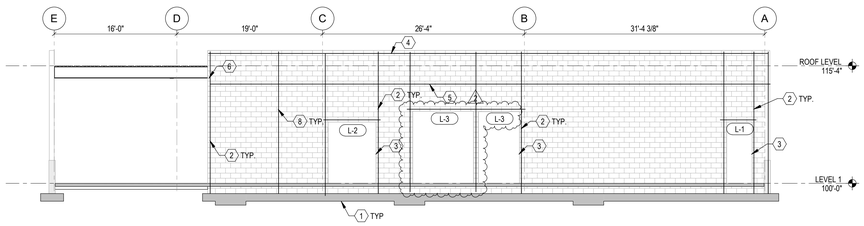

LINE 3 (LOOKING WEST)
5 ELEVATION
S401.3 — 1/8" = 1'-0"

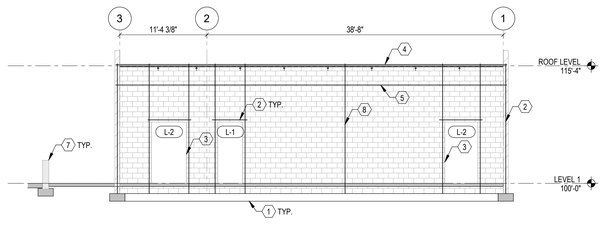

LINE B (LOOKING SOUTH)
6 ELEVATION
S401.3 — 1/8" = 1'-0"

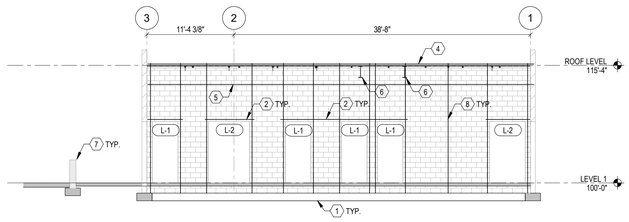

7 ELEVATION
S401.3 — 1/8" = 1'-0"

DRAWING NOTES:

1. REFER TO S000 SERIES FOR GENERAL STRUCTURAL NOTES, ABBREVIATIONS, AND TYPICAL DETAILS.
2. REFER TO S200 SERIES FOR FOUNDATION DETAILS.
3. REFER TO S300 SERIES FOR FRAMING DETAILS.
4. DATUM ELEVATION 1001.5' = 100'-0"

ELEVATION KEY NOTES:

1. FOUNDATION PER PLAN.
2. TYPICAL WALL REINFORCING AT CORNERS, EDGES OF OPENINGS, INTERSECTION WALLS, ETC. PER GENERAL NOTES.
3. WINDOW/DOOR/ETC. OPENING IN CMU WALL. REFER TO ARCH TO CONFIRM DIMENSIONS.
4. 8" DEEP CONT. BOND BEAM WITH 2#5 BOTTOM AT THE TOP OF THE WALL.
5. 24" DEEP CONT. BOND BEAM WITH 2#5 BOTTOM BELOW JOIST BEARING.
6. STEEL BEAM AND BEAM BEARING PLATE PER PLAN.
7. CONCRETE KNEE WALL AT GREENHOUSE.
8. #5 AT 32" O.C. VERTICAL

WALL ELEVATION LEGEND:

L-X — INDICATES CMU BOND BEAM LINTEL ABOVE DOOR/WINDOW OPENING. REFER TO TYPICAL DETAIL FOR REINFORCING.

This document is the product and property of Baxter Hodell Donnelly Preston, Inc. Neither the document nor the information it contains may be copied or used for other than the specific project for which it was prepared without the written consent of Baxter Hodell Donnelly Preston, Inc.

University of Kentucky

No.	Issue/Revision/Submission	Date
1	ADDENDUM 1	11.08.2024
2	BID AND PERMIT	10.11.2024

Flad Architects
MADISON
644 SOUTHPOINTE COURT, SUITE 1
VERONA, WISCONSIN 53593
PHONE 608.358.3681
WWW.FLADARCH.COM

BHDP
COLUMBUS
210 MARCONI BLVD
COLUMBUS, OHIO 43215
PHONE 614.221.6900

BCAE ENGINEERING: DAYTON, OH
DELMAX CONSTRUCTION: URBANA, OH
TERRACON: LEXINGTON, KY
FLAD: MADISON, WI

CMTA INC: LEXINGTON, HY
THP LIMITED INC: CINCINNATI, OH
NV5: PITTSBURGH, PA
BELL ENGINEERING: HOPKINSVILLE, KY
VIBRASURE: SAN FANSISCO, CA

UNIVERSITY OF KENTUCKY
TEACHING GREENHOUSE
1421 UNIVERSITY DR. LEXINGTON, KENTUCKY 40503

ELEVATIONS

STATE OF KENTUCKY — BRAD C. SAALFELD — 26869 — LICENSED PROFESSIONAL ENGINEER

Project Manager: SJD
Drawn: MRB
Checked: BCS
Issue Drawing Date: 10.11.2024
Project Number: UKX05.00

S401.3

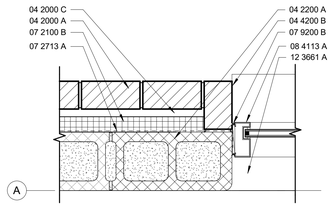

N10 / A101.3 — WINDOW JAMB
1 1/2" = 1'-0"

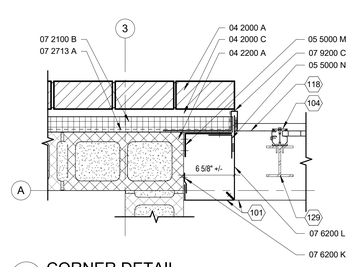

N7 / A101.3 — CORNER DETAIL
1 1/2" = 1'-0"

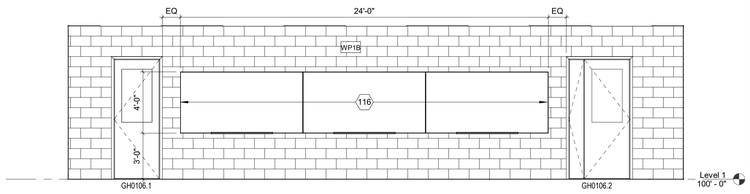

K10 / A101.3 — TEACHING WALL ELEVATION
1/4" = 1'-0"

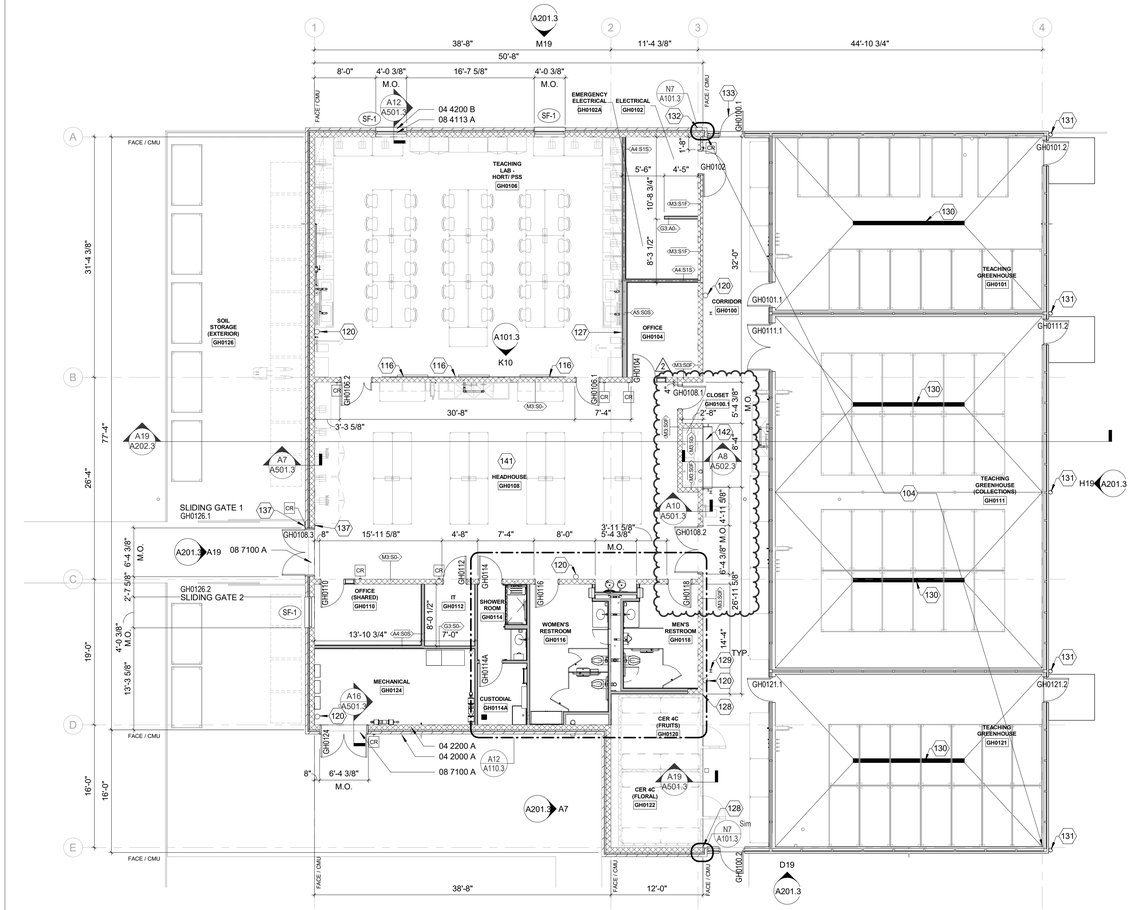

A13 / A101.3 — FIRST FLOOR PLAN
1/8" = 1'-0"

GENERAL ARCHITECTURAL NOTES

A. REFER TO PLUMBING, MECHANICAL, AND ELECTRICAL DRAWINGS FOR ASSOCIATED WORK.
B. DIMENSIONS ON PLANS ARE TO FACE OF WALL, CMU OR COLUMN CENTERLINE - UON.
C. OPENING DIMENSIONS ON PLAN ARE TO ROUGH OPENING OR CENTERLINE OF MULLION - UON.
D. DOORS NOT DIMENSIONED ON THE PLAN ARE TO BE INSTALLED 4" FROM END OF WALL TO EDGE OF FRAME.
E. PROVIDE ADEQUATE BLOCKING IN WALL FOR FIXTURES, ACCESSORIES, DISPLAY BOARDS, SHELVING, CASEWORK, EQUIPMENT, ETC.
F. PROVIDE METAL-EDGE TRIM ACCESSORIES AT ALL EXPOSED GYPSUM WALL BOARD OUTSIDE CORNERS AND WHERE GYPSUM WALL BOARD TERMINATES INTO ANOTHER MATERIAL. PROVIDE CAULK AND A METAL EDGE BEAD WHERE GYPSUM WALL BOARD PARTITIONS ABUT MASONRY OR GLAZING FRAMES.
G. PROVIDE CONTROL JOINTS IN ALL GYPSUM WALL BOARD PARTITIONS AT SPANS NOT TO EXCEED 30'-0" IN EITHER DIRECTION, OR AS INDICATED.
H. WHERE GYPSUM WALL BOARD PARTITIONS EXTEND FROM FLOOR TO STRUCTURE ABOVE, PROVIDE A JOINT BETWEEN THE PARTITION AND STRUCTURE TO ALLOW FOR DEFLECTION.
I. PROVIDE FIRE RATED JOINT SEALS AND PENETRATION SEALS IN FIRE RATED ASSEMBLIES. REFER TO MECHANICAL, PLUMBING, AND ELECTRICAL DRAWINGS.
J. SOUND SEAL NEW GYPSUM BD PARTITIONS AT PERIMETER TERMINATIONS AT FLOORS, WALLS, AND STRUCTURE ABOVE, BOTH SIDES. SEAL PENETRATIONS. FILL STUD CAVITY WITH SOUND BATTS AS REQUIRED.
K. SOUND INSULATION: 3-1/2" THICK FIBER BATTS.

REFERENCE KEYNOTES

04 2000 A	FACE BRICK - RUNNING BOND
04 2000 C	CAVITY WALL AIR SPACE
04 2200 A	8-INCH REINFORCED CONCRETE MASONRY UNITS; REFER TO STRUCTURAL DRAWINGS. PROVIDE BULLNOSE CORNER FOR ALL CMU END AND OUTSIDE CORNER LOCATIONS.
04 4200 B	LIMESTONE SILL WITH DRIP
05 5000 M	3"x6"x12GA STEEL ANGLE.
05 5000 N	3"x3"x16GA STEEL ANGLE.
07 2100 B	2" THICK (R-10) RIGID EXTRUDED POLYSTYRENE CAVITY INSULATION ADHERED TO CONCRETE MASONRY UNITS
07 2713 A	NON-BITUMINOUS SELF-ADHERING SHEET AIR BARRIER
07 6200 K	METAL CLIP SECURED TO CMU.
07 6200 L	0.060 ALUMINUM BRAKE METAL TRIM. ALIGN TO FACE OF BRICK ABOVE. SEAL ALL LOCATIONS WHERE TRIM MEETS ANOTHER MATERIAL.
07 9200 B	SEALANT AND BACKER ROD ON BOTH SIDES OF STOREFRONT AT ALL PERIMETER JOINTS
07 9200 C	SEALANT AND BACKER ROD
08 4113 A	ALUMINUM-FRAMED STOREFRONT SYSTEM INFILL AT MASONRY PUNCHED OPENINGS. B.O.D. IS KAWNEER TRIFAB VERSAGLAZE 451T FRAMING SYSTEM WITH 2" SIGHTLINE.
08 7100 A	SADDLE THRESHOLD. SET IN BED OF BUTYL SEALANT.
12 3661 A	SOLID SURFACING WINDOW STOOL WITH 1-1/4" TALL THICKENED FRONT EDGE. ADHERED TO 1/2" THICK PLYWOOD SUBSTRATE.

SHEET KEYNOTES

101	ALIGN.
104	GREENHOUSE PANELS AND STRUCTURE BY GREENHOUSE MANUFACTURER. PROVIDE CONCRETE WALL BELOW GREENHOUSE PANELS. REFER TO STRUCTURAL DRAWINGS.
116	MARKER BOARD. REFER TO ELEVATIONS FOR DIMENSIONS, AND SPEC SECTION 10 1100 VISUAL DISPLAY UNITS FOR MORE INFORMATION.
118	EXPANSION FLASHING BY GREENHOUSE CONTRACTOR.
120	FIRE EXTINGUISHER, BRACKET MOUNTED.
127	FIRE EXTINGUISHER INSIDE OF RECESSED CABINET. REFER TO LAB EQUIPMENT FOR INFORMATION REGARDING THE SAFETY SHOWER WITH INCLUDED RECESSED FIRE EXTINGUISHER CABINET.
128	CLOSURE PANEL BY CER. REFER TO LAB DRAWINGS.
129	GREENHOUSE STEEL BY GREENHOUSE CONTRACTOR.
130	TRENCH DRAIN. REFER TO PLUMBING DRAWINGS FOR MORE INFORMATION.
131	DOWNSPOUT. TIE INTO BOOT. REFER TO CIVIL DRAWINGS.
132	RECESS MOUNTED KNOX BOX WITH FACTORY PAINTED FINISH. MOUNT AT 5'-6" FROM THE LEVEL OF DOOR THRESHOLD TO THE BOTTOM OF THE KNOX BOX, AND 3'-0" FROM DOOR JAMB TO THE RIGHT SIDE OF THE KNOX BOX.
133	DOOR TO RECEIVE CARD READER AND AUTO OPERATOR BY GREENHOUSE MANUFACTURER.
137	AUTO OPERATOR.
141	COORDINATE FLOOR DRAIN COVER ELEVATION WITH POLISHED CONCRETE FLOOR FINISHING.
142	CHAIN OPERATED OVERHEAD COILING DOOR. CHAIN HOIST MECHANISM TO BE ON RIGHT SIDE. REFER TO SPECIFICATIONS FOR MORE INFORMATION.

PARTITION SYMBOL KEY

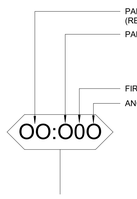

University of Kentucky

No.	Issue/Revision/Submission	Date
2	ADDENDUM 1	11.08.2024
1	BID AND PERMIT	10.11.2024

Flad Architects
MADISON
644 SCIENCE DR.
MADISON, WI 53711
PHONE 608.358.3661
WWW.FLADARCH.COM

BHDP
COLUMBUS
224 MARKOR PKWY.
SUITE 200
COLUMBUS, OHIO 43215
PHONE 614.481.7683

BCAE ENGINEERING: DAYTON, OH
DELMAX CONSTRUCTION: URBANA, OH
TERRACON: LEXINGTON, KY

CMTA INC: LEXINGTON, KY
THP LIMITED INC: CINCINNATI, OH
NV5: PITTSBURGH, PA
BELL ENGINEERING: HOPKINSVILLE, KY
VIBRASURE: SAN FRANCISCO, CA

UNIVERSITY OF KENTUCKY
TEACHING GREENHOUSE
1421 UNIVERSITY DR. LEXINGTON, KENTUCKY 40503
FIRST FLOOR PLAN

Project Manager: A. MEDINA
Drawn: M.PLOUCHA/J.BEVERIDGE
Checked: K. DENMAN
Initial Drawing Date: 10.11.2024
Project Number: UKX05.00

A101.3
11/7/2024 9:53:26 AM

This document is the product and property of Baxter Hodell Donnelly Preston, Inc. Neither the document nor the information it contains may be copied or used for other than the specific project for which it was prepared without the written consent of Baxter Hodell Donnelly Preston, Inc.

Revit Template Version 2021

Autodesk Docs://UKX0500 University of Kentucky - Ag Research Facility 1/UKX0500-R23-B3-TEACHING-GREENHOUSE-ARCH.rvt

Revit Template Version 2021

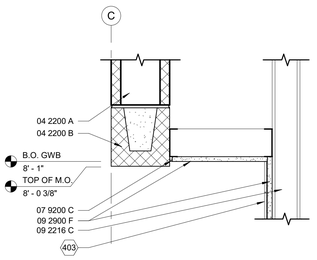

N10 A401.3 CEILING DETAIL
1 1/2" = 1'-0"

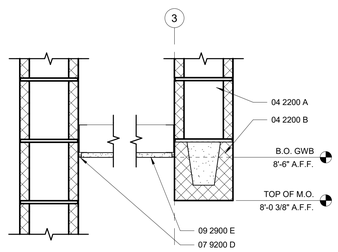

K13 A401.3 CEILING DETAIL
1 1/2" = 1'-0"

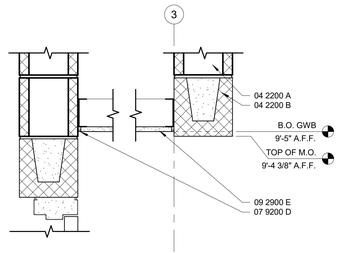

K10 A401.3 CEILING DETAIL
1 1/2" = 1'-0"

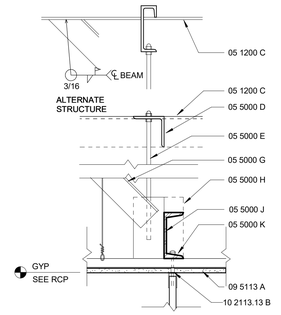

K7 A401.3 TOILET PARTITION SUPPORT DETAIL
1 1/2" = 1'-0"

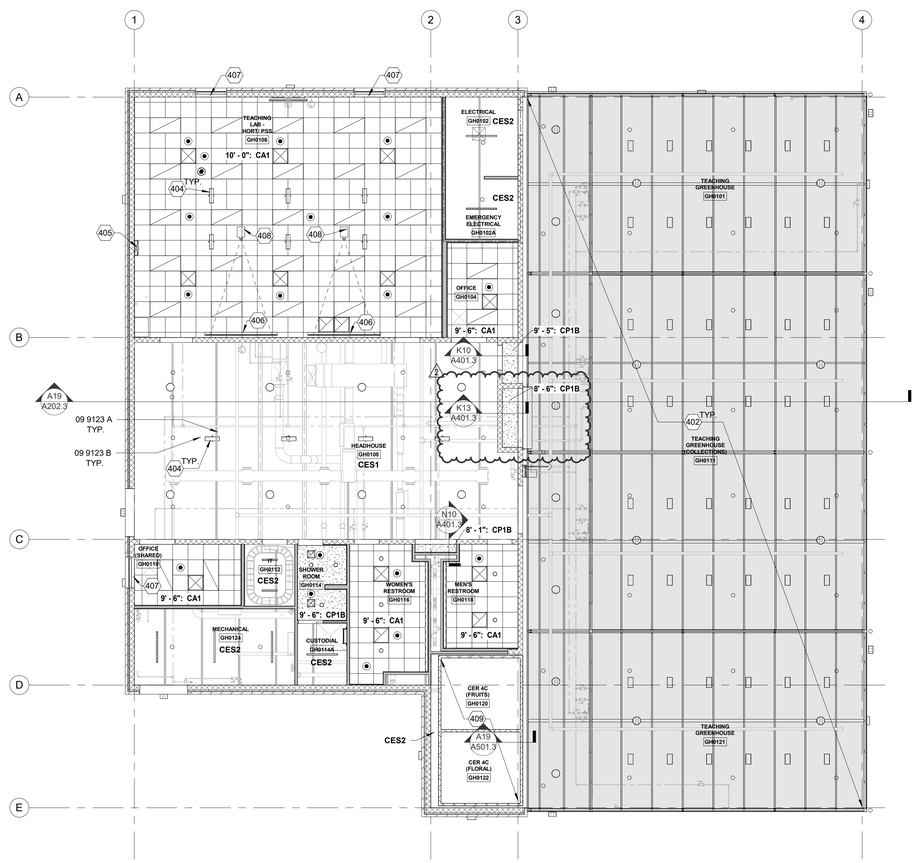

A13 A401.3 REFLECTED CEILING PLAN
1/8" = 1'-0"

GENERAL REFLECTED CEILING PLAN NOTES

A. REFER TO OTHER DISCIPLINE DRAWINGS FOR LOCATIONS OF CEILING MOUNTED DEVICES. NOTE: NOT ALL CEILING MOUNTED MOUNTED DEVICES ARE SHOWN ON THIS PLAN.
B. THESE DRAWINGS SHALL BE USED FOR GENERAL LAYOUT OF CEILING DEVICES. CONSULT WITH ARCHITECT IF A CONFLICT ARISES WITH OTHER DISCIPLINE DRAWINGS.
C. PROVIDE AND COORDINATE ACCESS PANELS IN GYPSUM BOARD CEILINGS FOR ACCESS TO EQUIPMENT AND CONTROLS. REVIEW LOCATIONS WITH ARCHITECT DURING CONTRACTOR COORDINATION.
D. ALL LAY-IN CEILING GRID SHALL BE CENTERED WITHIN ROOMS AND BOUNDARIES UNLESS OTHERWISE NOTED. AVOID CUT SIZES SMALLER THAN 3 INCHES.
E. REFER TO FINISH LEGEND FOR CEILING TYPES AND SOFFIT PAINT COLORS.
F. ALL VERTICAL FACES OF SOFFIT TO BE FINISHED TO MATCH ADJACENT SURFACE MATERIALS. THE HORIZONTAL SURFACE TO BE PAINTED WHITE UNLESS OTHERWISE NOTED.
G. WHERE SPECIFIC ACCENT PAINT FINISHES ARE NOTED, THE VERTICAL AND HORIZONTAL SURFACES OF THE SOFFIT ARE TO BE PAINTED THE SPECIFIED COLOR. REFER TO FINISH PLANS.
H. REFER TO Q-SERIES DRAWINGS FOR FUME HOOD LOCATIONS AND CEILING MOUNTED LAB EQUIPMENT. COORDINATE ABOVE CEILING LAB EQUIPMENT SUPPORTS WITH ABOVE CEILING BUILDING SYSTEMS, LIGHTING, AND STRUCTURE. COORDINATE LAB EQUIPMENT PENETRATIONS IN THE CEILING AND HOLD CEILING FINISH TIGHT TO EQUIPMENT.
I. CENTER RECESSED CAN LIGHTS AND SPRINKLER HEADS IN CEILING PANELS UNLESS OTHERWISE NOTED.
J. PROVIDE SUPPORTS FOR CEILING MOUNTED PROJECTORS. REFER TO TECHNOLOGY DRAWINGS.
K. ALL EXTERIOR WINDOWS TO RECEIVE MANUAL ROLLER SHADE WITH LIGHT FILTERING SHADECLOTH. REFER TO FINISH LEGEND FOR TYPES.

REFERENCE KEYNOTES

04 2200 A	8-INCH REINFORCED CONCRETE MASONRY UNITS; REFER TO STRUCTURAL DRAWINGS. PROVIDE BULLNOSE CORNER FOR ALL CMU END AND OUTSIDE CORNER LOCATIONS.
04 2200 B	REINFORCED BOND BEAM; REFER TO STRUCTURAL DRAWINGS
05 1200 C	STRUCTURAL STEEL ROOF FRAMING. REFER TO STRUCTURAL DRAWINGS.
05 5000 D	4"x4"x 5/16" STEEL ANGLE TO BOTTOM CHORD OF JOIST AT EACH HANGER ROD (ANGLE SHOWN PERPENDICULAR TO STRUCTURE)
05 5000 E	1/2" DIAMETER HANGER ROD AT EACH PILASTER. WELD TO PLATE BELOW
05 5000 G	3"x3"x1/4" ANGLE BRACE TO STRUCTURE ABOVE. MAXIMUM 36" O.C. AND AT EACH PARTITION
05 5000 H	1/4" PLATE. WELD TO END OF CHANNEL TYPICAL
05 5000 J	CONTINUOUS C8x11.5
05 5000 K	BEVELED WASHERS TYPICAL
07 9200 C	SEALANT AND BACKER ROD
07 9200 D	SEALANT AND BACKER ROD AT PERIMETER OF GWB CEILING
09 2216 C	3 5/8 INCH METAL STUD FRAMING - STUDS @ 16 INCH OC - TYPICAL.
09 2900 E	5/8" GLASS MATT GYSPUM SHEATHING BOARD ON 3-5/8" LGMF.
09 2900 F	5/8" GYPSUM BOARD ON LGMF.
09 5113 A	SCHEDULED CEILING - REFER TO INTERIOR ARCHITECTURE DRAWINGS.
09 9123 A	PAINT ROOF SUPPORT FRAMING IN HEADHOUSE
09 9123 B	PAINT ROOF DECK IN HEADHOUSE
10 2113.13 B	BEARING CHANNEL

SHEET KEYNOTES

402	SURFACE OF GREENHOUSE ABOVE. GREENHOUSE CONSTRUCTION BY GREENHOUSE CONTRACTOR. REFER TO MEP DRAWINGS FOR BUILDING SYSTEMS WITHIN GREENHOUSE CONSTRUCTION.
403	REFER TO THE FINISH PLAN FOR TYPE AND EXTENTS OF WALL FINISH.
404	POWER CORD REEL. REFER TO Q SHEETS FOR LABORATORY EQUIPMENT PLANS AND INFORMATION.
405	LABORATORY EQUIPMENT. REFER TO Q SHEETS FOR MORE INFORMATION.
406	RECESSED PROJECTOR SCREEN.
407	TYPICAL WINDOW ROLLER SHADE AND BRACKET. REFER TO FINISH LEGEND ON SHEET A801.3 AND SPECIFICATIONS FOR MORE INFORMATION.
408	CEILING MOUNTED PROJECTORS, OFOI.
409	INSULATED CEILING PANEL BY CONTROLLED ENVIRONMENT ROOM CONTRACTOR.

REFLECTED CEILING PLAN LEGEND

1'-0": CLG1	CEILING HEIGHT AND TYPE TAG
	2'-0" X 2'-0" GRID WITH ACOUSTICAL PANELS - REFERENCE FINISH TAG AND LEGEND
	GYPSUM BOARD CEILING (PAINTED)
	RECESSED 2'-0" X 4'-0" FIXTURE
	COVE LIGHT FIXTURE (RESTROOMS ONLY)
	INDUSTRIAL STRIP LIGHT FIXTURE
	RECESSED DOWNLIGHT FIXTURE
	SUSPENDED DOWNLIGHT FIXTURE
	SPEAKERS (TEACHING LAB ONLY), REFER TO AV DRAWINGS
	MECHANICAL SUPPLY DIFFUSER
	MECHANICAL RETURN DIFFUSER
	MECHANICAL EXHAUST DIFFUSER
	SPRINKLER HEADS

This document is the product and property of Baxter Hodell Donnelly Preston, Inc. Neither the document nor the information it contains may be copied or used for other than the specific project for which it was prepared without the written consent of Baxter Hodell Donnelly Preston, Inc.

University of Kentucky

No.	Issue/Revision/Submission	Date
2	ADDENDUM 1	11.08.2024
1	BID AND PERMIT	10.11.2024

BHDP
COLUMBUS
231 MARCONI BLVD.
COLUMBUS, OHIO 43215
PHONE 614.621.3675

CMTA INC: LEXINGTON, KY
THP LIMITED INC: CINCINNATI, OH
NV5: PITTSBURGH, PA
BELL ENGINEERING: HOPKINSVILLE, KY
VIBRASURE: SAN FRANCISCO, CA

Flad Architects
MADISON
644 ESOENCY DR.
MADISON, WI 53711
PHONE 608.358.3681
WWW.FLADARCH.COM

BC&E ENGINEERING: DAYTON, OH
DELMAX CONSTRUCTION: URBANA, OH
TERRACON: LEXINGTON, KY

UNIVERSITY OF KENTUCKY
TEACHING GREENHOUSE
1421 UNIVERSITY DR. LEXINGTON, KENTUCKY 40503

REFLECTED CEILING PLAN AND DETAILS

Project Manager: A. MEDINA
Drawn: M.PLOUCHA/J.BEVERIDGE
Checked: K. DENMAN
Initial Drawing Date: 10.11.2024
Project Number: UKX05.00

A401.3

REFERENCE KEYNOTES

04 2000 A	FACE BRICK - RUNNING BOND
04 2000 C	CAVITY WALL AIR SPACE
04 2200 B	REINFORCED BOND BEAM; REFER TO STRUCTURAL DRAWINGS
05 5000 B	CONTINUOUS STEEL SHELF ANGLE - REFER TO STRUCTURAL DRAWINGS
07 2100 B	2" THICK (R-10) RIGID EXTRUDED POLYSTYRENE CAVITY INSULATION ADHERED TO CONCRETE MASONRY UNITS
07 2713 A	NON-BITUMINOUS SELF-ADHERING SHEET AIR BARRIER
08 3323 C	CHAIN OPERATED OVERHEAD COILING DOOR. REFER TO SPECIFICATIONS FOR MORE INFORMATION.

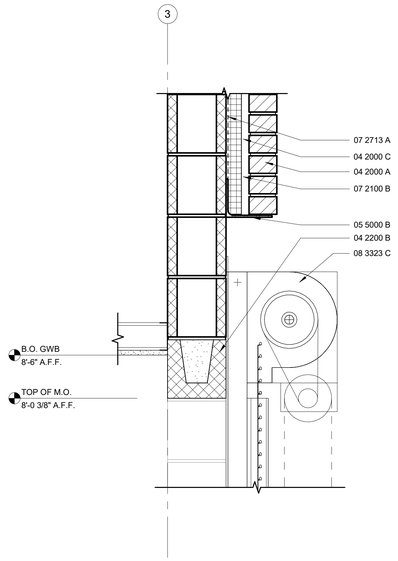

G8 A502.3 ROLLING DOOR HEAD DETAIL
1 1/2" = 1'-0"

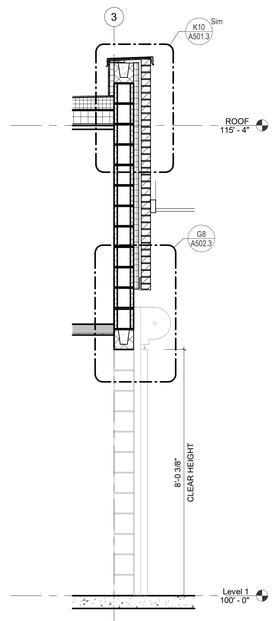

A8 A502.3 ROLLING DOOR HEAD SECTION
1/2" = 1'-0"

University of Kentucky

No.	Issue/Revision/Submission	Date
1	ADDENDUM 1	11.08.2024

BHDP Flad Architects

COLUMBUS
214 MARCONI BLVD.
SUITE 200
COLUMBUS, OHIO 43215
PHONE 614.486.1500

MADISON
644 SCIENCE DR.
MADISON, WI 53711
PHONE 608.233.2661
WWW.FLAD.COM

CMTA INC: LEXINGTON, KY
THP LIMITED INC: CINCINNATI, OH
NV5: PITTSBURGH, PA
BELL ENGINEERING: HOPKINSVILLE, KY
VIBRASURE: SAN FRANCISCO, CA

BC&E ENGINEERING: DAYTON, OH
DELMAX CONSTRUCTION: URBANA, OH
TERRACON: LEXINGTON, KY

UNIVERSITY OF KENTUCKY
TEACHING GREENHOUSE
1421 UNIVERSITY DR. LEXINGTON, KENTUCKY 40503

WALL SECTIONS AND DETAILS

Project Manager
A. MEDINA
Drawn
J.BEVERIDGE
Checked
K. DENMAN
Initial Drawing Date
10.11.2024
Project Number
UKX05.00

A502.3

This document is the product and property of Baxter Hodell Donnelly Preston, Inc. Neither the document nor the information it contains may be copied or used for other than the specific project for which it was prepared without the written consent of Baxter Hodell Donnelly Preston, Inc.

Autodesk Docs://UKX0500 University of Kentucky - Ag Research Facility 1/UKX0500-R23-B3-TEACHING-GREENHOUSE-ARCH.rvt — 11/12/2024 12:10:01 AM

FINISH LEGEND

FLOORS (F):

FLOOR GENERAL (FG)	03 35 43
FG1	MFG/TYPE: POLISHED CONCRETE COLOR: GREY, ARCHITECT TO APPROVE FINISH LOCATION: REFER TO FINISH PLANS
FG2	MFG/TYPE: SEALED CONCRETE COLOR: GREY, ARCHITECT TO APPROVE FINISH LOCATION: BACK-OF-HOUSE AREAS, MECHANICAL SPACES; REFER TO FINISH PLANS

FLOOR HIGH- PERFORMANCE RESINOUS (FH)	09 67 23
FH1	TYPE/SPEC: RESINOUS EPOXY FLOORING MFG/STYLE: STONHARD / STONCLAD EPOXY FLOORING COLOR: CHARCOAL INSTALLATION: APPLY TO CONCRETE SLABS, INCLUDING ALL SIDES OF FORMED CONCRETE TRENCH DRAINS. 6"H INTEGRAL COVE BASE AT FLOOR; INSTALL PER MANUFACTURER INSTRUCTION LOCATION: GREENHOUSES NOTE: BASIS OF DESIGN

BASE (B):

BASE RESILIENT (BR)	09 65 13
BR1	MFG/TYPE: JOHNSONITE RUBBER BASE COLOR: 20 CHARCOAL SIZE: 4"H COVE LOCATION: GENERAL ARCHITECTURE

PANEL PRODUCTS (P):

PANEL PRODUCTS (PP)	06 64 00
PP1	TYPE/SPEC: FRP WALL PROTECTION MFG/STYLE: MARLITE STANDARD FRP COLOR: P151 LIGHT GREY W/ PEBBLED FINISH SIZE/EDGE: 4' X 9' PANELS INSTALLATION: DIRECT APPLIED; INSTALL UP TO 48" AFF LOCATION: CUSTODIAL ROOMS

OPENING TREATMENT [WINDOW] (OT):

OPENING TREATMENT FOR WINDOWS (OT)	12 24 13
OT1	MFG/TYPE: MECHOSHADE STYLE/PATTERN: ECOVEIL 1550 SERIES, 3% OPENNESS, PVC-FREE FABRIC COLOR: 1570 SHADOW GREY OPERATION: MANUAL LOCATION: REFER TO RCPS

WALLS (W):

WALL PAINT (WP)	09 91 13 AND 09 91 23
WP1	MFG/TYPE: SHERWIN WILLIAMS, INTERIOR LATEX COLOR: SW7064 PASSIVE FINISH: EGGSHELL LOCATION: GENERAL ARCHITECTURE
WP1B	MFG/TYPE: SHERWIN WILLIAMS, HIGH PERFORMANCE EPOXY PAINT SYSTEM COLOR: SW7064 PASSIVE FINISH: EGGSHELL LOCATION: HIGH MOISTURE AREAS
WP1C	MFG/TYPE: SHERWIN WILLIAMS, INTERIOR LATEX COLOR: SW7064 PASSIVE FINISH: SEMI-GLOSS LOCATION: INTERIOR FACES OF HOLLOW METAL DOORS AND FRAMES
WP1D	MFG/TYPE: SHERWIN WILLIAMS, EXTERIOR LATEX COLOR: SW7064 PASSIVE FINISH: SEMI-GLOSS LOCATION: EXTERIOR FACES OF HOLLOW METAL DOORS AND FRAMES, BRICK SHELVES, AND GUARD RAILS
WP8	MFG/TYPE: SHERWIN WILLIAMS COLOR: SW7068 GRIZZLE GRAY FINISH: FLAT LOCATION: EXPOSED ROOF DECK AND STRUCTURAL MEMBERS

WALL HIGH-PERFORMANCE COATING (WH)	09 96 00
WH1	TYPE/SPEC: HIGH PERFORMANCE COATING, POLYAMIDOAMINE EPOXY MFG/STYLE: TNEMEC, SERIES L69 HI-BUILD EPOXOLINE II COLOR: 00WH WHITE INSTALLATION: APPLY TO CONCRETE WALLS FROM TOP OF BASE TO BOTTOM OF PREFABRICATED GREENHOUSE STRUCTURES LOCATION: GREENHOUSES NOTE: SCRATCH COAT & HIGH BUILD SPECIALTY COATING

WALL TILE (WT)	09 30 13
WT1	MFG/TYPE: ROCA TILE STYLE / COLOR: FLOW / FLOWH17-312 WHITE SIZE: 3" X 12" INSTALLATION: VERTICAL, MONOLITHIC GROUT: TBD LOCATION: RESTROOMS, SHOWER ROOM
WT2	MFG/TYPE: FLORIDA TILE STYLE / COLOR: STORIED / FTISTE70G SAFFRON YELLOW SIZE: 2.5" X 10" INSTALLATION: HERRINGBONE GROUT: TBD LOCATION: ACCENT WALL

CEILINGS (C):

CEILING ACOUSTIC (CA)	09 51 13
CA1	MFG/TYPE: ARMSTRONG OPTIMA 3250PB SIZE/EDGE: 24" X 24" X 3/4" SQUARE TEGULAR COLOR: WHITE GRID: 15/16" TEE LOCATION: TYPICAL AT OFFICES, CORRIDORS, TEACHING LABS PER REFLECTED CEILING PLANS

CEILING PAINTED (CP)	09 91 23
CP1B	MFG/TYPE: SHERWIN WILLIAMS COLOR: SW7064 PASSIVE FINISH: EPOXY, FLAT LOCATION: RESTROOMS, SOFFITS, REFER TO RCPS

CEILING EXPOSED (CES)	09 91 23
CES1	MFG/TYPE: EXPOSED STRUCTURE COLOR/FINISH: WP8, AS INDICATED ON FINISH LEGEND LOCATION: AS INDICATED ON REFLECTED CEILING PLANS
CES2	MFG/TYPE: EXPOSED STRUCTURE COLOR/FINISH: NONE - LEAVE UNFINISHED LOCATION: AS INDICATED ON REFLECTED CEILING PLANS

LAMINATE (L):

LAMINATE (L)	06 41 16
L1	MFG/TYPE: WILSONART STYLE/COLOR: 7996-38 NATURAL RECON FINISH: VELVET LOCATION: CASEWORK

SOLID SHEET / SLAB (SS):

SOLID SHEET OR SLAB (SS)	12 36 61
SS2	TYPE/SPEC: SOLID SURFACE COUNTERTOP MFG/STYLE: HI-MACS COLOR/FINISH: AURORA BLANC M617 SIZE: 30" x 145" SLAB, .5" THICK EDGE: RIMROCK EDGE (MITERED) LOCATION: RESTROOMS, SHOWER ROOM
SS4	TYPE/SPEC: SOLID SURFACE WINDOW STOOLS MFG/STYLE: WILSONART SOLID SURFACE COLOR/FINISH: PEACE GREY 9232SS SIZE: 30" x 144" SLAB, .5" THICK EDGE: RIMROCK EDGE (MITERED) LOCATION: WINDOW STOOLS

GENERAL FINISH PLAN NOTES

A. REFERENCE FINISH LEGEND FOR FINISH TYPE AND DESCRIPTION. REFERENCE BOOK SPECIFICATIONS FOR ALL FINISH REQUIREMENTS.
B. CONTRACTOR TO PROVIDE ALL LEVELING MATERIALS AS REQUIRED TO ENSURE AN ADEQUATE LEVEL SUBSTRATE FOR FINAL FINISH MATERIAL INSTALLATION. PROVIDE LATEX FILL TO ENSURE A LEVEL TRANSITION BETWEEN FLOORING TRANSITIONS.
C. AT DOOR OPENINGS, TRANSITION BETWEEN DISSIMILAR MATERIALS IS TO OCCUR DIRECTLY AT THE CENTERLINE OF THE DOOR IN THE CLOSED POSITION.
D. AT CASED OPENING LOCATIONS, TRANSITION BETWEEN TWO DISSIMILAR MATERIALS IS TO OCCUR AT THE CENTERLINE OF THE OPENING, UNLESS OTHERWISE NOTED.
E. ALL PARTITIONS, GYPSUM AND MASONRY, ARE TO RECEIVE WP1 PAINT UNLESS OTHERWISE NOTED. REFER TO SPECIFICATIONS FOR PRIMING, NUMBER OF COATS, AND TYPES OF PAINT FINISH. REFER TO FINISH PLANS FOR PAINT LOCATIONS.
F. FINISH CHANGES ON WALLS ARE TO OCCUR AT INSIDE AND OUTSIDE CORNERS, UNLESS OTHERWISE NOTED. ALL DISCREPANCIES ARE TO BE REVIEWED WITH THE ARCHITECT/DESIGNER.
G. BR1 BASE THROUGHOUT UNLESS OTHERWISE NOTED.
H. ACOUSTIC CEILING TILE CA1 IN ALL AREAS INDICATED ON REFLECTED CEILING PLAN, UNLESS OTHERWISE NOTED ON FINISH DRAWINGS OR CEILING PLANS.
I. REFER TO STRUCTURAL CONCRETE SPECIFICATIONS FOR ADDITIONAL INFORMATION RELATED TO CONTROL JOINT, SAWCUT JOINTS AND OTHER JOINTS NOT SHOWN ON FINISH PLANS.
J. HOLLOW METAL DOORS AND FRAMES TO BE PAINTED WP1C UNLESS OTHERWISE NOTED.

SHEET KEYNOTES

801 FINISH INDICATED FOR WALLS REFER TO PARTITIONS SURROUNDING CER EQUIPMENT, DEFINED ON A100 SERIES SHEETS. FINISH INDICATED FOR FLOOR REFER TO THE INTERIOR OF THE CER. ALL AREAS UNDER CER EQUIPMENT ARE TO BE SEALED EXPOSED CONCRETE. FLOOR TYPE FG2.
803 EXTEND WH1 WALL AND BASE FINISH ALONG CONCRETE KNEE WALL, EXTENDING UP AND OVER TOP OF KNEE WALL.
804 EXTERIOR SIDE OF DOOR LEAF. PAINT WP1D. REFER TO FINISH LEGEND FOR INFORMATION.
805 INTERIOR SIDE OF DOOR LEAF. PAINT WP1C. REFER TO FINISH LEGEND FOR INFORMATION.

--- DASHED LINE: CONCRETE SLAB EDGE BOUNDARY - REFER TO STRUCTURAL DRAWINGS
—— SOLID LINE: SAW CUT CONCRETE CONTROL JOINT LOCATIONS. ALIGN AS SHOWN WITH FACE OF CMU, ON PULL SIDE OF DOORS, AND ALIGNED WITH RECESSED PORTIONS OF THE CONCRETE SLAB.

A19 / A801.3 FIRST FLOOR SLAB CONTROL JOINT PLAN
3/32" = 1'-0"

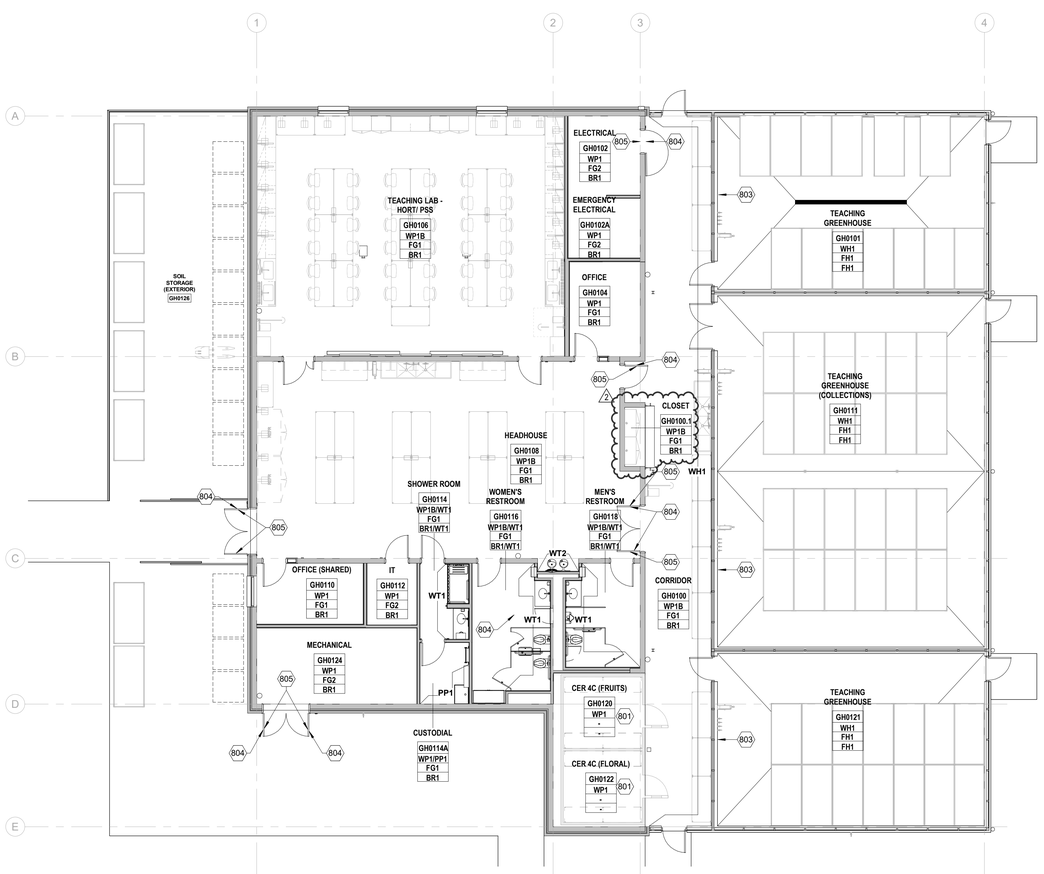

A13 / A801.3 FIRST FLOOR FINISH PLAN
1/8" = 1'-0"

FLOOR PLAN KEY

ROOM NUMBER
FINISH TAGS
DIRECTION OF FLOORING MATERIAL; STRIPE OR PLANK.

FINISH & MATERIAL ABBREVIATIONS

* MULTIPLE FINISH ON SURFACE - SEE PLAN/NOTES
--- NO NEW FINISH

FG GENERAL - CONCRETE
FR RESILIENT FLOOR - LVT, VCT, RUBBER...

WP PAINT
WT TILE

BR RESILIENT

CA ACOUSTIC TILE CEILING
CES EXPOSED CEILING TO STRUCTURE
CP PAINTED CEILING

PP PANEL PRODUCTS FOR WALLS - SYSTEM
SP SPECIALTY PRODUCT - SCREEN, RESIN, 3D

LP PLASTIC LAMINATE
SS SHEET/SLAB - STONE, QUARTZ, SOLID SURFACE
OT OPENING TREATMENTS - SHADES, DRAPES, BLINDS

University of Kentucky

No.	Issue/Revision/Submission	Date
2	ADDENDUM 1	11.08.2024
1	BID AND PERMIT	10.11.2024

MADISON
644 SCIENCE DR
MADISON, WI 53711
PHONE 608.356.2661
WWW.FLADARCH.COM

Flad Architects

BHDP
COLUMBUS
274 MARCONI BLVD.
COLUMBUS, OHIO 43215
PHONE 614.481.6300

BOAE ENGINEERING: DAYTON, OH
DELMAX CONSTRUCTION: URBANA, OH
TERRACON: LEXINGTON, KY

CMTA INC: LEXINGTON, KY
THP LIMITED INC: CINCINNATI, OH
NV5: PITTSBURGH, PA
BELL ENGINEERING: HOPKINSVILLE, KY
VIBRASURE: SAN FRANCISCO, CA

UNIVERSITY OF KENTUCKY
TEACHING GREENHOUSE
1421 UNIVERSITY DR. LEXINGTON, KENTUCKY 40503

FINISH PLAN AND LEGEND

Project Manager: A. MEDINA
Drawn: T. ZALENSKI
Checked: K. DENMAN
Initial Drawing Date: 10.11.2024
Project Number: UKX05.00

A801.3

This document is the product and property of Baxter Hodell Donnelly Preston, Inc. Neither the document nor the information it contains may be copied or used for other than the specific project for which it was prepared without the written consent of Baxter Hodell Donnelly Preston, Inc.

LABORATORY CASEWORK TYPE LEGEND

- LABORATORY CASEWORK SHALL BE PAINTED METAL, UNO.
- FIXED CASEWORK SHALL RECEIVE BASE ON TOEKICK PER DETAIL 10/Q501.3.

B 36 x 30 A L

- LOCK IF REQUIRED
- CASEWORK STYLE
- CASEWORK DEPTH (as needed)
- CASEWORK WIDTH
- CASEWORK TYPE

CASEWORK PLAN KEY

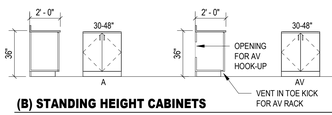

(B) STANDING HEIGHT CABINETS

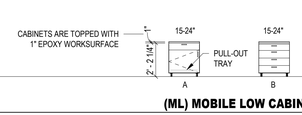

(ML) MOBILE LOW CABINETS

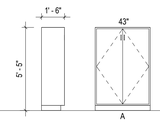

(P) PESTICIDE STORAGE CABINETS

ALL PESTICIDE CABINETS HAVE INSET DOORS.

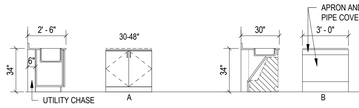

(SA) SINK CABINETS - ACCESSIBLE HEIGHT

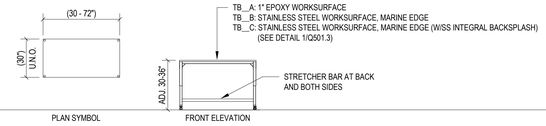

(TB) LAB TABLES

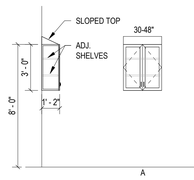

(W) WALL CABINETS

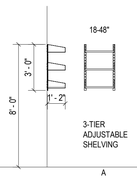

(WS) WALL SHELVING

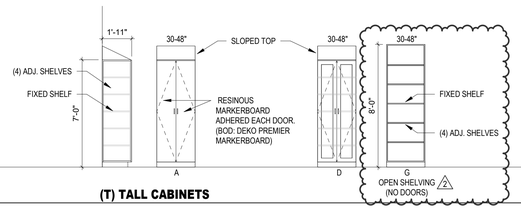

(T) TALL CABINETS

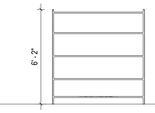

(HD) HEAVY DUTY SHELVING

SYMBOL AND TAG - LABORATORY SINK

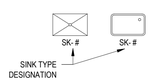

LABORATORY SINK SCHEDULE

SINK TYPE (SK)	SINK DESCRIPTION	MANUFACTURER	BASIS OF DESIGN / SPEC SECTION
1	DROP-IN EPOXY SINK, CORNER DRAIN, 28"x15"x12"D, COLOR SHALL MATCH BENCHTOP	DURCON	D59
3	ADA DROP-IN EPOXY SINK, CORNER DRAIN, 25"x15"x5"D, COLOR SHALL MATCH BENCHTOP	DURCON	A55
15	STAINLESS STEEL SCULLERY SINK, DOUBLE COMPARTMENT 30L"x24"Wx14"D EACH; OVERALL DIMENSIONS 27"Wx111"Lx36" H	JUST MANUFACTURING	NSFB-260-24RL-J

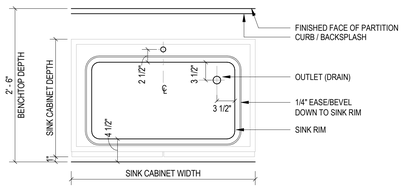

FIXTURE SPACING AT LAB SINK

1" = 1'-0"

TAG - LABORATORY SERVICE FIXTURE

LABORATORY SERVICE FIXTURE SCHEDULE

FIXTURE TYPE	SERVICE TYPE	FIXTURE DESCRIPTION	MANUFACTURER	MODEL NO.
1A	LHW/LCW	DECK MOUNTED MIXING FAUCET WITH 10" RIGID/SWING GOOSENECK SPOUT, VACUUM BREAKER AND WRIST BLADE HANDLES	WATERSAVER FAUCET CO.	L414-RS-10VB-BH
1C	LHW/LCW	PANEL MOUNTED CENTERSET MIXING FAUCET WITH 8" RIGID/SWING GOOSENECK SPOUT, VACUUM BREAKER, AND WRIST BLADE HANDLES	WATERSAVER FAUCET CO.	LA224-RS-8VB-BH
1D	LHW/LCW	PANEL MOUNTED MIXING PRE-RINSE UNIT WITH VB SPRAY HOSE, BACK FLOW PREVENTER, WRIST BLADE HANDLES, ADJ. WALL SUPPORT BRACKET	WATERSAVER FAUCET CO.	PR171-VB-BH-WSA-PCL
4C	ES/EW	SURFACE MOUNTED SAFETY STATION WITH DRAIN PAN, WALL MOUNTED EXPOSED SHOWER HEAD, WITH THERMOSTATIC MIXING VALVE	WATERSAVER FAUCET CO.	SSBF2173; TM-6040
4E	ES/EW	RECESSED SAFETY STATION, EMERGENCY SHOWER, EYEWASH WITH INTERNAL DRAIN, AND FIRE EXTINGUISHER CABINET; WITH THERMOSTATIC MIXING VALVE	WATERSAVER FAUCET CO.	GSC2650A; TM-6040
5A	CW	OPEN HOSE REEL, STAINLESS STEEL, 3/8 INCH x 50 FEET, REAR TRIGGER WATER GUN	T&S BRASS AND BRONZE WORKS, INC.	B-7142-02
5B	CW	COLD WATER FIXTURE		SEE PLUMBING DRAWINGS
5C	TW	TEMPERED WATER FIXTURE WITH MIXING VALVE		SEE PLUMBING DRAWINGS
5C	TW	TEMPERED WATER FIXTURE WITH MIXING VALVE (FOR CONNECTION WITH DOSATRON)		SEE PLUMBING DRAWINGS
5D	PW	PURE WATER FIXTURE		SEE PLUMBING DRAWINGS

TAG - LABORATORY FURNISHING

LABORATORY FURNISHINGS SCHEDULE

FURNISHING NUMBER	FURNISHING DESCRIPTION	DETAIL / SPEC SECTION
1C	SS PEGBOARD, 36" x 36" WITH SS DRIP TROUGH WITH SCREEN	SPECIFICATION SECTION 11 5346
2C	OVERHEAD EXTENSION CORD REEL	SEE ELECTRICAL DRAWINGS/SPECIFICATIONS
2E	VERTICAL SERVICE CHASE, 6"x24", BY LAB CASEWORK CONTRACTOR	SPECIFICATION SECTION 12 3553.13
4B	WIRE SHELVING, 24" DEEP	OWNER FURNISHED / OWNER INSTALLED (OFOI)

LABORATORY TYPICAL MOUNTING HEIGHTS

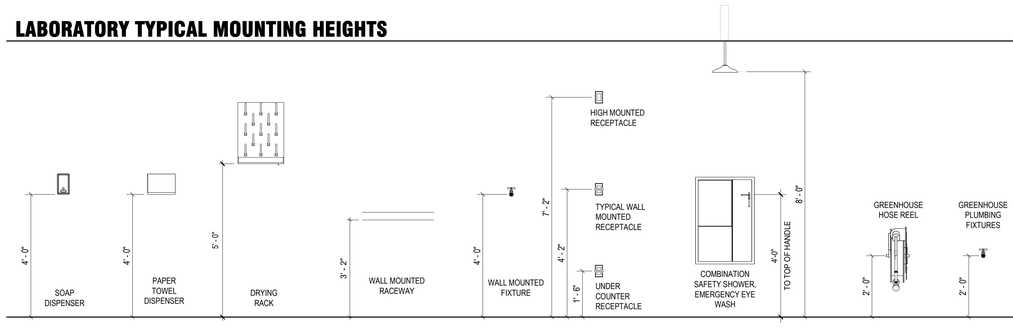

LABORATORY GENERAL NOTES

1	LABORATORY FURNISHING DIVISION 11/12 CONTRACTOR SHALL CAREFULLY EXAMINE THE LABORATORY FURNISHING DRAWINGS AND SPECIFICATION AND ALL OTHER DRAWINGS. SPECIFICATIONS TO PROPERLY DETERMINE CONTRACTUAL RESPONSIBILITIES.
2	FOR ACTUAL ROOM DIMENSIONS, REFER TO THE ARCHITECTURAL PLANS.
3	LABORATORY FURNISHING DIVISION 11/12 CONTRACTOR SHALL FIELD VERIFY ALL DIMENSIONS BEFORE FABRICATION.
4	OVERALL LENGTH OF TOPS SHALL BE DETERMINED BY CASEWORK AND DIMENSIONS AS INDICATED ON PLANS. SUCH LENGTHS SHALL REMAIN CONSTANT REGARDLESS OF SUCCESSFUL BIDDER'S STANDARDS. TOPS TYPICAL SHALL OVERHANG 1" AT EACH END AND 1" FROM FRONT OF BASE CABINET. WHEN OVERALL DIMENSIONS ARE GIVEN, 1" OVERHANG IS INCLUDED.
5	ON WALL-TO-WALL CASEWORK ASSEMBLIES, THE "OPEN" SPACE DIMENSION SHALL BE DETERMINED IN THE FIELD. IF THERE IS MORE THEN ONE "OPEN" SPACE INDICATED, SPACE AVAILABLE FOR "OPEN" SPACE SHALL BE EVENLY DISTRIBUTED - UNO.
6	DIMENSIONS FOR COUNTERTOP HEIGHTS ARE NOMINAL WITHIN 3/4" OF THE REQUIRED HEIGHT.
7	ALL WALL BENCH TOPS SHALL BE 2'-6" DEEP INCLUDING THE BACKSPLASH, UNO. ISLAND OR PENINSULA BENCHES 5'-0" WIDE, UNO.
8	TOP MATERIAL 1" THICK EPOXY RESIN CONSTRUCTION AT 36" AFF, UNO.
9	FILLER PANELS SHALL BE USED BETWEEN BACK OF CABINETS OR HOODS AND WALLS AT EXPOSED ENDS AND WHEN BASE CABINETS AND/OR HOODS SET BACK-TO-BACK. FILLER PANELS SHALL ALSO BE USED AT THE ENDS OF BENCHES, ALL KNEE SPACES, AND AT ALL EXPOSED CORE AREAS.
10	ALL EXPOSED-TO-VIEW BACKS AND SIDES AND FILLER PANELS ARE TO BE FINISHED.
11	HIGH CASEWORK AND FREE-STANDING SHELVING SHALL BE SEISMICALLY RESTRAINED.
12	ALL PENETRATIONS THROUGH COUNTERTOP SHALL BE CAULKED BY THE LAB FURNISHINGS DIVISION 11/12 CONTRACTOR WITH APPROVED ACID-RESISTANT SEALANT.
13	LOCATION OF EQUIPMENT, SUCH AS ISLAND BENCH SHELF SUPPORTS, OVERHEAD SERVICE CARRIERS, UMBILICAL ENCLOSURES, FUME HOODS, BRACES, OR ANY OTHER ITEMS THAT MAY INTERFERE WITH LIGHTING, STRUCTURAL OR MECHANICAL SYSTEMS SHALL BE CAREFULLY COORDINATED BY THE LABORATORY FURNISHINGS DIVISION 11/12.
14	ANY TYPE OF UNISTRUTS OR SLOTTED STANDARD FRAME SUPPORTS (USED FOR RACKS, SHELVING, ETC.) SHALL BE SPACED AND POSITIONED TO CLEAR FITTINGS, SINKS AND CUPSINKS FOR NON-BSL-3 APPLICATIONS.
15	ON WALLS WHERE UNISTRUT OR SLOTTED STANDARDS RUN FULL HEIGHT AND INTERFERE WITH ELECTRICAL SERVICES, RACEWAYS SHALL BE WALL MOUNTED AND UNISTRUT/STANDARDS CUT AS REQUIRED, UNO.
16	FOR LOCATION OF OVERHEAD SERVICE CARRIERS, SNORKELS AND ANY OTHER FURNISHINGS THAT PENETRATE THE CEILING, SEE ARCHITECTURAL REFLECTED CEILINGS PLANS. UMBILICAL CEILING PENETRATIONS ARE SHOWN APPROXIMATE ON THE ARCHITECTURAL REFLECTED CEILING PLANS.
17	FOR LAB SERVICES FITTINGS, TYPES, LOCATION AND ORDER, SEE THE "Q" FLOOR PLANS AND SPECIFICATIONS. THESE FITTINGS SHALL BE FURNISHED AND DELIVERED BY THE LABORATORY FURNISHINGS DIVISION 11/12 CONTRACTOR AND INSTALLED BY THE PLUMBING OR MECHANICAL PIPING CONTRACTORS. SINK SHALL BE FURNISHED AND INSTALLED BY THE LABORATORY FURNISHINGS DIVISION 11/12 CONTRACTOR. COORDINATE WITH GENERAL CONTRACTOR OR CONSTRUCTION MANAGER.
18	ALL PLUMBING/MECHANICAL PIPING SYSTEM SUPPORTS SHALL BE FURNISHED AND INSTALLED BY THE PLUMBING/MECHANICAL PIPING CONTRACTOR. THE SPACING HANGERS AND FASTENERS SHALL BE AS PER PIPE MANUFACTURER'S RECOMMENDATIONS.
19	ELECTRICAL CONTRACTOR SHALL FURNISH AND INSTALL ALL ELECTRICAL RACEWAY. FOR INSTALLATION SEE ELECTRICAL AND LABORATORY FURNISHINGS DRAWINGS AND SPECIFICATIONS FOR QUANTITY, TYPE AND LOCATION.
20	UNLESS NOTED OTHERWISE, ALL UNISTRUT BRACKETS AND FITTINGS INDICATED ON THE LABORATORY FURNISHINGS DOCUMENTS SHALL BE SUPPLIED, INSTALLED AND PAINTED BY THE LABORATORY FURNISHINGS DIVISIONS 11/12 CONTRACTOR.
21	FOR CHEMICAL FUME HOOD PRE-PIPING AND PRE-WIRING, SEE THE LABORATORY FURNISHINGS PLANS, SPECIFICATIONS AND DETAILS. SYSTEMS TESTING SHALL BE AS SPECIFIED BY DIVISION 11 5313.
22	WALL BLOCKING (NON-CELLULAR) PROVIDED BY GENERAL CONTRACTOR, TO BE COORDINATED WITH LABORATORY FURNISHINGS DIVISION 11/12 CONTRACTOR.

LAB ABBREVIATIONS AND ACRONYMNS

AFF	ABOVE FINISHED FLOOR	M	MOBILE CABINET
ADJ	ADJUSTABLE	MB	MARKER BOARD
ADW	ANIMAL DRINKING WATER	MIC	MOBILE INSTRUMENT CART
AS	ANTI-STATIC	MS	METRO SHELVING
AR	ARGON		
		N2	NITROGEN
B	BASE CABINET	NIC	NOT IN CONTRACT
BSC	BIOLOGICAL SAFETY CABINET		
		O2	OXYGEN
C	CORROSIVE CABINET	OHSC	OVER HEAD SERVICE CARRIER
CA	COMPRESSED AIR	OFOI	OWNER FURNISHED / OWNER INSTALLED
CAB	CABINET	OFCI	OWNER FURNISHED / CONTRACTOR INSTALLED
CFCI	CONTRACTOR FURNISHED/ CONTRACTOR INSTALLED		
CFOI	CONTRACTOR FURNISHED/ OWNER INSTALLED	PC	PLUMBING CONTRACTOR
CH	CHILLER	PC	PUMPED CONDENSATE
CO	CARBON MONOXIDE	PCWS/R	PROCESS CHILLED WATER SUPPLY/RETURN
CO2	CARBON DIOXIDE	PCW	PROCESS COLD WATER
CHWS/R	CHILLED WATER SUPPLY/RETURN	PHW	PROCESS HOT WATER
CS	CUP SINK	PP	POLYPROPLYENE
		PRI	PRE-RINSE
DH	DRENCH HOSE	PW	PURE WATER
DI	DEIONIZED WATER		
DPF	DIAMOND PLATE FLOORING	RAD	RADIOLOGICAL, RADIOISOTOPE
E	EPOXY	REF	REFRIGERATOR
EC	ELECTRICAL CONTRACTOR	REF	ROOF EXHAUST FAN
ENCL	ENCLOSURE	RO	REVERSE OSMOSIS WATER
EQ	EQUAL	ROS/R	REVERSE OSMOSIS WATER
ES	EMERGENCY SHOWER		SUPPLY / RETURN
EW	EYEWASH		
		S	SINK CABINET
F	FLAMMABLE CABINET	SA	SMALL ANIMAL
FD	FLOOR DRAIN	SAA	SATELLITE ACCUMULATION AREA
FE	FIRE EXTINGUISHER	SG	SPECIALTY GAS
FH	CHEMICAL FUME HOOD	SIM	SIMILAR
FP	FILLER PANEL	SK	SINK
FS	FLOOR SINK	SNO	SNORKEL
FRZ	FREEZER	SS	STAINLESS STEEL
GC	GAS CABINET	T	TALL CABINET
GEN	GENERATOR	TW	TEMPERED WATER
GB	GLOVE BOX		
GH	GREENHOUSE	UA	USER AIR
H2	HYDROGEN	UHP	ULTRA HIGH PURITY
HE	HELIUM	UNO	UNLESS NOTED OTHERWISE
HP	HIGH PURITY	UPS	UNINTERRUPTED POWER SUPPLY
HPC	HIGH PERFORMANCE COATING		
HV	HIGH VACUUM	V	VENTED CABINET
HOI	HOIST	VAC	VACUUM AIR
KO	KNEE SPACE OPENING	VBSE	VENTED BALANCE SAFETY ENCLOSURE
LA	LARGE ANIMAL	W	UPPER / WALL CABINET
LCW	LABORATORY COLD WATER	WP	WATER POLISHER
LEV	LOCAL EXHAUST VENT	WPV	WATER POLISHER VALVE
LFC	LAB FURNISHINGS CONTRACTOR	W/	WITH
LFH	LAMINAR FLOW HOOD	W/O	WITHOUT
LHW	LABORATORY HOT WATER		
LVS	LABORATORY VACUUM		
LNZ	LIQUID NITROGEN		

This document is the product and property of Baxter Hodell Donnelly Preston, Inc. Neither the document nor the information it contains may be copied or used for other than the specific project for which it was prepared without the written consent of Baxter Hodell Donnelly Preston, Inc.

University of Kentucky

No.	Issue/Revision/Submission	Date
2	ADDENDUM 1	11.08.2024
1	BID AND PERMIT	10.11.2024

MADISON
644 EDGEWOOD DR.
MADISON, WI 53711
PHONE 608.358.2681
WWW.FLADARCH.COM

Flad Architects

BCAE ENGINEERING: DAYTON, OH
DELMAX CONSTRUCTION: URBANA, OH
TERRACON: LEXINGTON, KY

COLUMBUS
211 MORCOM BLVD.
COLUMBUS, OHIO 43215
PHONE 614.481.6000

BHDP

CMTA INC: LEXINGTON, KY
THP LIMITED INC: CINCINNATI, OH
NV5: PITTSBURGH, PA
BELL ENGINEERING: HOPKINSVILLE, KY
VIBRASURE: SAN FRANCISCO, CA

UNIVERSITY OF KENTUCKY
TEACHING GREENHOUSE
1421 UNIVERSITY DR. LEXINGTON, KENTUCKY 40503

LABORATORY SYMBOLS, NOTES AND LEGENDS

Project Manager: A. MEDINA
Driver: FLAD
Checked: FLAD / BHDP
Initial Drawing Date: 10.11.2024
Project Number: UKX05.00

Q001.3

Autodesk Docs://UKX0500 University of Kentucky - Ag Research Facility 1/UKX0500-R23-B3-TEACHING-GREENHOUSE-ARCH.rvt — 11/7/2024 9:53:31 AM

Revit Template Version 2021

1 Q110.3 TEACHING GREENHOUSE - FIRST FLOOR PLAN
1/4" = 1'-0"

LAB PLAN SYMBOLS LEGEND

- SYMBOL INDICATES WALL-MOUNTED BRACKET SUPPORTING COUNTERTOP; REFER TO DETAIL 9/Q501.3.
- B18A — TICKMARKS INDICATE CABINET BELOW COUNTERTOP
- CASEWORK DESIGNATION; REFER TO LAB CASEWORK LEGEND ON SHEET Q001.3.
- E — COUNTERTOP MATERIAL DESIGNATION
- +36" — COUNTERTOP HEIGHT, AFF; E = EPOXY; SS = STAINLESS STEEL
- EPOXY SINK
- STAINLESS STEEL SINK
- SK- # — SINK TYPE DESIGNATION
- CA-1A — LAB SERVICE FIXTURE TAG; FIXTURE DESIGNATION; SERVICE DESIGNATION
- #X — LAB FURNISHING TAG. REFER TO SCHEDULE ON SHEET Q001.3.
- UPPER WALL CABINET
- ADJUSTABLE WALL SHELVING
- EMERGENCY SHOWER EYEWASH STATION (ES/EW)
- CHEMICAL FUME HOOD
- BIOLOGICAL SAFETY CABINET
- LOCAL EXHAUST
- COMPRESSED GAS CYLINDER RACK
- COMPRESSED GAS CYLINDER RESTRAINTS
- EQ-XXX — EQUIPMENT CFCI
- EQ-XXX — EQUIPMENT OFOI

University of Kentucky

No.	Issue/Revision/Submission	Date
2	ADDENDUM 1	11.08.2024
1	BID AND PERMIT	10.11.2024

Flad Architects
MADISON
644 EDGEWOOD DR.
MADISON, WI 53711
PHONE 608.238.2661
WWW.FLAD.COM

BHDP
COLUMBUS
274 MARCONI BLVD.
SUITE 200
COLUMBUS, OHIO 43215
PHONE 614.486.1950

BC&E ENGINEERING: DAYTON, OH
DELMAX CONSTRUCTION: URBANA, OH
TERRACON: LEXINGTON, KY

CMTA INC: LEXINGTON, KY
THP LIMITED INC: CINCINNATI, OH
NV5: PITTSBURGH, PA
BELL ENGINEERING: HOPKINSVILLE, KY
VIBRASURE: SAN FRANCISCO, CA

UNIVERSITY OF KENTUCKY
TEACHING GREENHOUSE
1421 UNIVERSITY DR. LEXINGTON, KENTUCKY 40503
LABORATORY FIRST FLOOR PLAN

Project Manager: A. MEDINA
Drawn: FLAD
Checked: FLAD / BHDP
Initial Drawing Date: 10.11.2024
Project Number: UKX05.00

Q110.3

This document is the product and property of Baxter Hodell Donnelly Preston, Inc. Neither the document nor the information it contains may be copied or used for other than the specific project for which it was prepared without the written consent of Baxter Hodell Donnelly Preston, Inc.

Autodesk Docs://UKX0500 University of Kentucky - Ag Research Facility 1/UKX0500-R23-B3-TEACHING-GREENHOUSE-ARCH.rvt 11/7/2024 9:59:44 AM

Revit Template Version 2021

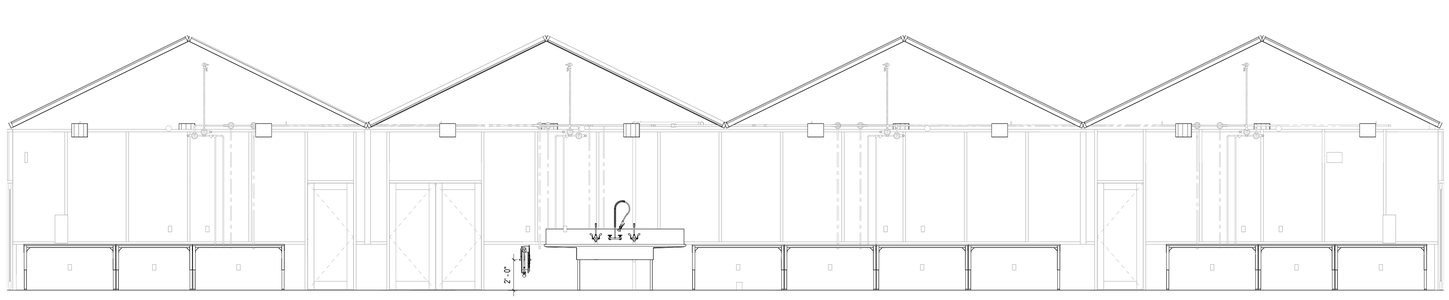

9 Q210.3 GREENHOUSE CORRIDOR ELEVATION - EAST
1/4" = 1'-0"

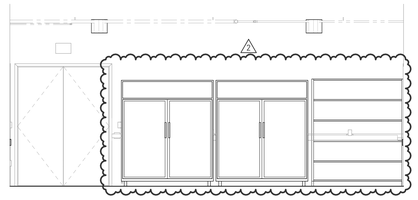

8 Q210.3 HEADHOUSE ELEVATION - WEST
1/4" = 1'-0"

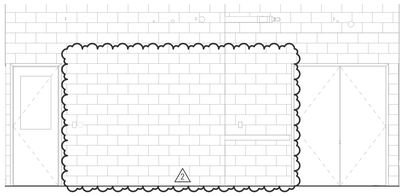

7 Q210.3 HEADHOUSE ELEVATION - EAST
1/4" = 1'-0"

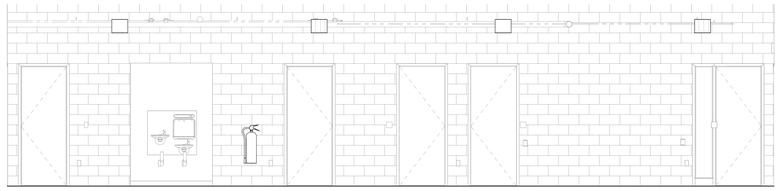

6 Q210.3 HEADHOUSE ELEVATION - SOTUTH
1/4" = 1'-0"

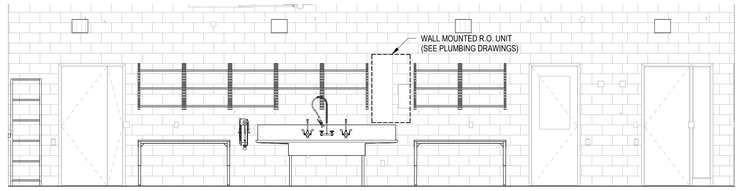

5 Q210.3 HEADHOUSE ELEVATION - NORTH
1/4" = 1'-0"

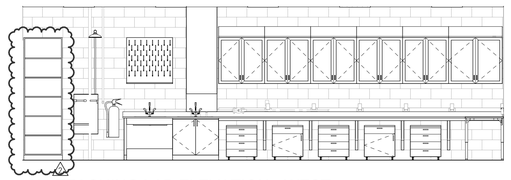

4 Q210.3 TEACHING LAB ELEVATION - WEST
1/4" = 1'-0"

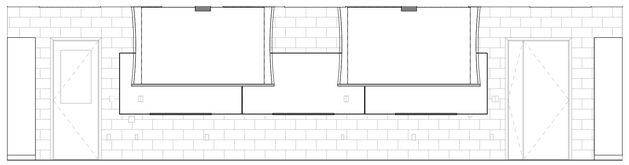

3 Q210.3 TEACHING LAB ELEVATION - SOUTH
1/4" = 1'-0"

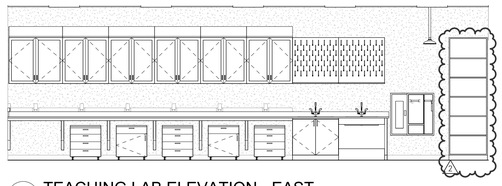

2 Q210.3 TEACHING LAB ELEVATION - EAST
1/4" = 1'-0"

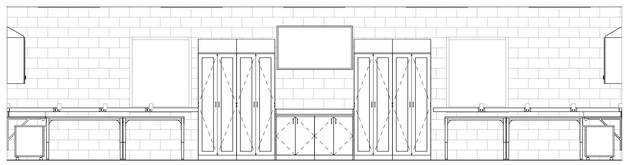

1 Q210.3 TEACHING LAB ELEVATION - NORTH
1/4" = 1'-0"

This document is the product and property of Baxter Hodell Donnelly Preston, Inc. Neither the document nor the information it contains may be copied or used for other than the specific project for which it was prepared without the written consent of Baxter Hodell Donnelly Preston, Inc.

University of Kentucky

No.	Issue/Revision/Submission	Date
2	ADDENDUM 1	11.08.2024
1	BID AND PERMIT	10.11.2024

Flad Architects
MADISON
644 ESQUIRE DR
MADISON, WI 53713
PHONE 608.233.2661
WWW.FLADARCH.COM

COLUMBUS
219 MARCONI BLVD
SUITE 200
COLUMBUS, OHIO 43215
PHONE 614.224.6900

BHDP

BC&E ENGINEERING: DAYTON, OH
DELMAX CONSTRUCTION: URBANA, OH
TERRACON: LEXINGTON, KY

CMTA INC.: LEXINGTON, KY
THP LIMITED INC.: CINCINNATI, OH
NV5: PITTSBURGH, PA
BELL ENGINEERING: HOPKINSVILLE, KY
VIBRASURE: SAN FRANCISCO, CA

UNIVERSITY OF KENTUCKY
TEACHING GREENHOUSE
1421 UNIVERSITY DR. LEXINGTON, KENTUCKY 40503

LABORATORY ELEVATIONS

Project Manager: A. MEDINA
Drawn: FLAD
Checked: FLAD / BHDP
Initial Drawing Date: 10.11.2024
Project Number: UKX05.00

Q210.3

Autodesk Docs://UKX0500 University of Kentucky - Ag Research Facility 1/UKX0500-R23-B3-TEACHING-GREENHOUSE-ARCH.rvt 11/7/2024 9:59:47 AM

INSTANTANEOUS WATER HEATER

TAG	WH-1, WH-2, WH-3
MANUFACTURER	EEMAX
MODEL	ED024480T2T ML
INPUT (KW)	24 KW
MAX CAPACITY (66° RISE)	2.5 GPM
CAPACITY RANGE	0.3 GPM - 4 GPM
OPERATING PRESSURE	25 - 150 PSI
VOLTAGE	480V - 3 PHASE

* INCLUDED ACCESSORIES: REMOTE CONTROLLER, REMOTE CONTROLLER CORD, ANCHORING SCREWS
* THE FOLLOWING OPTIONAL ACCESSORIES SHALL BE FURNISHED AND INSTALLED: (4) ISOLATION VALVE KITS, MULTI-SYSTEM CONTROLLER
* SET EACH WATER HEATER AT 120° F.

EXPANSION TANK

TAG	ET-1
MANUFACTURER	WATTS
MODEL	DET-5-M1
MAX PRESSURE (PSI)	150
MAX TEMPERATURE	200° F
TANK VOLUME-GAL.	2.1
TANK ACCEPTANCE-GAL.	.85
DIAPHRAGM	BUTYL RUBBER

RECIRCULATING PUMP

TAG	DP-1
MANUFACTURER	BELL & GOSSETT
MODEL	NBF-25
VOLTAGE / PHASE	115 / 1 □
WATTS	125
FLOW (GPM)	2
HEAD (FT.)	10
ALL BRONZE BODY	YES
100% LEAD FREE	YES

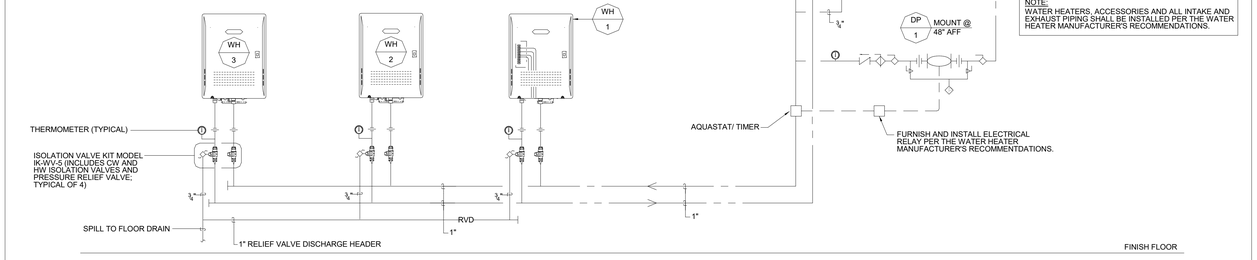

DOMESTIC WATER HEATING PIPING DIAGRAM

NOT TO SCALE

KEYNOTES

P1 FURNISH AND INSTALL A 2" REDUCED PRESSURE BACKFLOW PREVENTER WITH 1-1/2" BYPASS BACKFLOW PREVENTER. REFER TO DOMESTIC WATER SERVICE ENTRY DETAIL ON THIS SHEET FOR MORE INFORMATION.

P2 2" CW DN.

P3 6" SS DN.

P4 2" CW AND 1/2" HW DN. EXTEND FULL SIZE MAIN HORIZONTALLY IN CHASE BEHIND FIXTURES AND CONNECT. PROVIDE WATER HAMMER ARRESTORS AS REQUIRED.

P5 4" V UP TO 4" VTR.

P6 FURNISH AND INSTALL A SELF-ACTIVATING THERMOSTATIC BALANCING VALVE ASSEMBLY EQUAL TO THERM-OMEGA-TECH CIRCUIT SOLVER MODEL CSUAS WITH INTEGRAL BALL VALVES, STRAINERS, CHECK VALVE, AND DIRT LEG AT EACH CONNECTION. REFER TO DETAIL ON THIS SHEET.

P7 REFER TO DOMESTIC WATER HEATER PIPING DIAGRAM ON THIS SHEET FOR CONTINUATION

P11 ROUTE 3/4" CW UNDER COUNTERTOP FROM UTILITY CHASE TO FPWH.

P12 EXTEND QTY (2) 1/2" TW AND QTY (1) 1/2" CW LINES DN EXPOSED ON CORRIDOR WALL TO 18" AFF. PROVIDE 1/2" STUB OUT INTO GREENHOUSE COMPARTMENT WITH THREADED NPT CONNECTION AND BALL VALVE ON EACH LINE FOR CONNECTION TO GREENHOUSE EQUIPMENT.

P13 EXTEND 3/4" CW TO HOSE REEL AND CONNECT. PROVIDE VACUUM BREAKER AS REQUIRED BY CODE.

P14 FURNISH AND INSTALL MILLIPORE SIGMA MODEL ZLXE0150WW ELIX ESSENTIAL WATER PURIFICATION SYSTEM MOUNTED ON WALL. 15 L/HR CAPACITY WITH 5 MEGA OHM RESISTIVITY. EXTEND 1/2" CW TO UNIT AND CONNECT. INSTALL PER MANUFACTURER'S RECOMMENDATIONS

P15 FURNISH AND INSTALL MILLIPORE SIGMA MODEL TANKPE030 30 LITER POLYETHYLENE TANK ADJACENT TO WATER PURIFICATION SYSTEM. EXTEND PIPING FROM PURIFIER TO TANK AND CONNECT. INSTALL PER MANUFACTURER'S RECOMMENDATIONS.

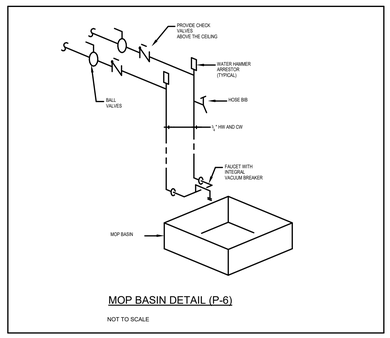

MOP BASIN DETAIL (P-6)

NOT TO SCALE

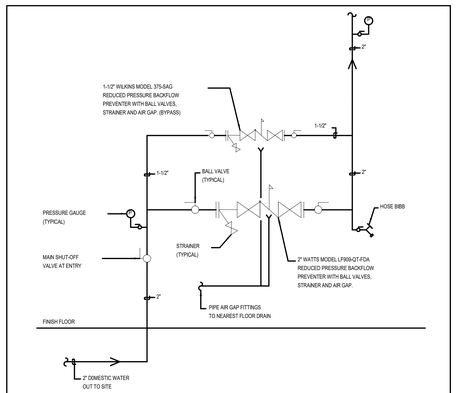

DOMESTIC WATER SERVICE ENTRY DETAIL

NOT TO SCALE

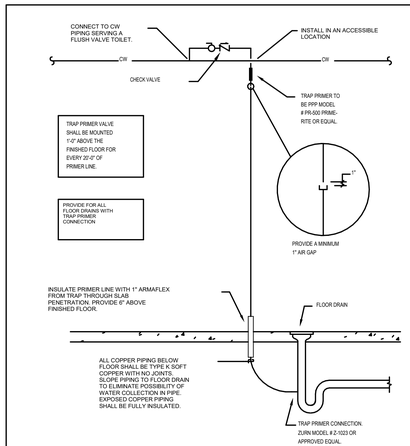

FLOOR DRAIN TRAP PRIMER PIPING SCHEMATIC

NOT TO SCALE

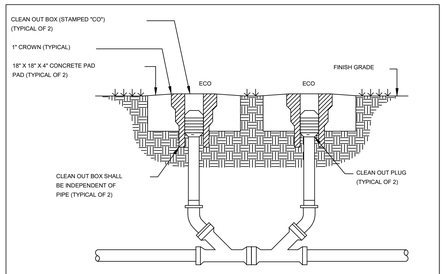

TWO-WAY EXTERIOR CLEANOUT DETAIL

NOT TO SCALE

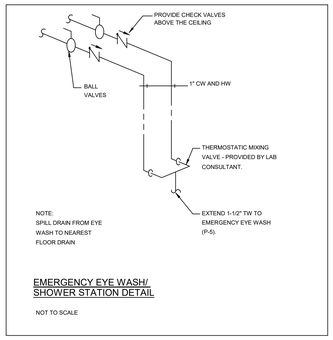

EMERGENCY EYE WASH/ SHOWER STATION DETAIL

NOT TO SCALE

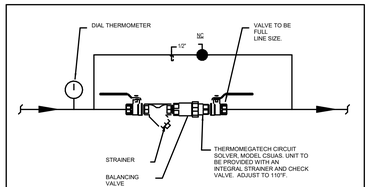

HOT WATER RETURN

BALANCING VALVE DETAIL.

NOT TO SCALE

COORDINATE ALL PENETRATIONS THROUGH GREENHOUSE GLASS WITH UTILITY ENTRY LOCATION PROVIDED BY GREENHOUSE CONSULTANT. SEAL AROUND ENTRY BOX WITH SILICONE BASED SEALANT, ASTM C920, TYPE S. REFER TO GREENHOUSE CONSULTANT DRAWINGS FOR MORE INFORMATION.

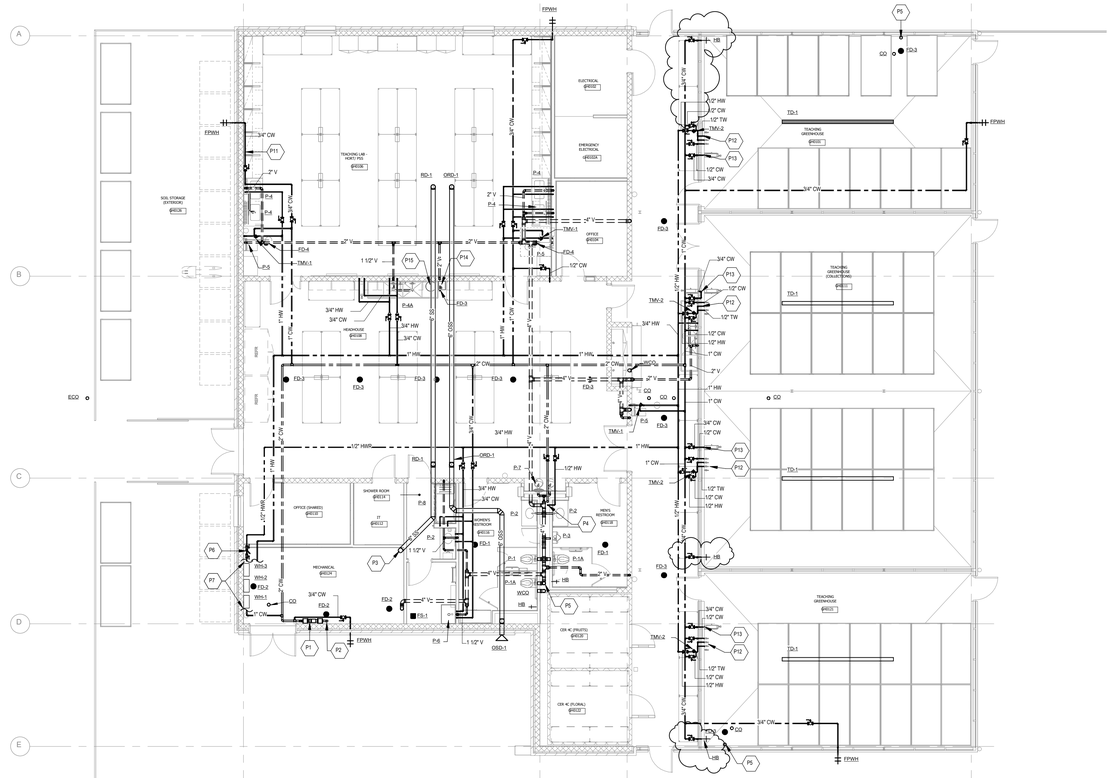

FIRST FLOOR - PLUMBING

SCALE: 1/8" = 1'-0"

NORTH

This document is the product and property of Bohler HDGM Connelly Prindle, Inc. Neither the document nor the information it contains may be copied, used or disclosed to any person for any purpose without the written permission of Bohler HDGM Connelly Prindle, Inc. which reserves all rights.

University of Kentucky

No.	Issue/Revision/Submission	Date
2	ADDENDUM 1	11.08.2024
1	BID AND PERMIT	10.11.2024

MADISON
MILWAUKEE, WI 53211
414.967.5444
www.bhdp.com

COLUMBUS
33 NORTH HIGH, 4th FL
614.628.0300
PROUD TO LIVE AND WORK

BHDP **Flad** Architects

BCJAE ENGINEERING: DAYTON, OH
DELMAX CONSTRUCTION: URBANA, OH
TERRAZON: LEXINGTON, KY

CMTA INC: LEXINGTON, KY
THP LIMITED INC: CINCINNATI, OH
NV5: PITTSBURGH, PA
BELL ENGINEERING: HONKINSVILLE, KY
VIBRASURE: SAN FRANCISCO, CA

UNIVERSITY OF KENTUCKY
TEACHING GREENHOUSE
1421 UNIVERSITY DR. LEXINGTON, KENTUCKY 40503

FIRST FLOOR PLAN - PLUMBING

STATE OF KENTUCKY
ROBERT S. JOHNSON
27666
LICENSED PROFESSIONAL ENGINEER

Project Manager	S. JOHNSON
Drawn	C. YOUNGBLOOD
Checked	N. ROGERS
Initial Drawing Date	10.11.24
Project Number	UKX05.00

P110.3

11/8/2024 9:55:16 AM

Autodesk Docs://UKX0500 University of Kentucky - Ag Research Facility 1/UKX0500-R23-TEACHING-GREENHOUSE-PLUMB.rvt

Revit Template Version 2021

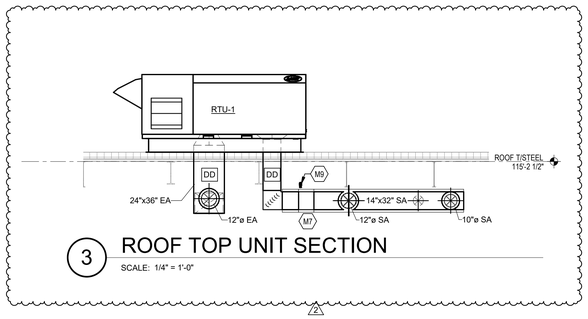

3 ROOF TOP UNIT SECTION

SCALE: 1/4" = 1'-0"

VAV/CAV BOX AIRFLOW SCHEDULE

MARK	ZONE NUMBER	INLET	OCCUPIED MIN CFM	UNOCCUPIED MIN CFM
VAV-06	GH0104	6"	300	300
VAV-12	GH0106	12"	1050	700
VAV-12	GH0108	12"	1200	800
VAV-08	GH0110	8"	750	750

RGD RUNOUT SCHEDULE

SYMBOL	RUNOUT DUCT SIZE
E-1	6" DIA.
E-2	8" DIA.
E-3	12" DIA.
E-4	48"X18"
E-5	6" DIA.
S-1	6" DIA.
S-3	8" DIA.
S-4	10" DIA.
S-5	12"X6"
S-6	6" DIA.
T-1	12" DIA.
T-2	12" DIA.

TAGGED NOTES

(##)

- M1 MAINTAIN 10' CLEARANCE BETWEEN EXHAUST AND OUTSIDE AIR INTAKE.
- M2 ROOFTOP DUCTWORK SHALL BE SUPPORTED FROM ROOF. PROVIDE SUPPORT TO MEET OR EXCEED DUCT WIDTH. SUPPORTS SHALL BE SPACED PER MANUFACTURERS REOMMENDATIONS.
- M3 COORDINATE SCREEN AND ACCESS DOOR DISTANCE WITH EQUIPMENT CLEARANCES. SCREEN PRIMARY SUPPORT SHALL BE FROM ROOF CURD. PROVIDE AUXILLARY SUPPORT PER MANUFACTURER. SEE SPECIFICATION SECTION 230200 FOR SCREEN REQUIREMENTS.
- M4 INSTALL BALANCE DAMPERS AT EACH CABINET EXHAUST. BALANCE EACH CABINET TO 75 CFM.
- M5 COORDINATE OPENING IN SCREEN FOR EA DUCT EXTENSION.
- M6 ELECTRIC STEAM GENERATOR. REFER TO HUMIDIFIER PIPING DETAIL ON SHEET M201.3 FOR ADDITIONAL INFORMATION.
- M7 HUMIDIFIER DISPERSION TUBE INSTALLED IN DUCT. INSTALL DUCT AT HEIGHT TO ALLOW FOR PITCH BACK TO STEAM GENERATOR. REFER TO HUMIDIFIER DETAIL ON SHEET M201.3 FOR ADDITIONAL INFORMATION. PROVIDE 12" MINIMUM OF STRAIGHT DUCT UP STREAM AND DOWN STREAM OF HUMIDIFIER DISPERSION TUBE.
- M8 EXPOSED UNINSULATED DUCTWORK SHALL BE READY FOR PAINTING. TYP.
- M9 PIPING SHALL BE HARD COPPER SIZED AND ROUTED WITH NECESARY TRAPS PER MANUFACTURER RECOMMENDATIONS.
- M10 EXPOSED INSTULAED DUCTWORK IN HEAD HOUSE SHALL BE DOUBLE WALL INSULATED. READY TO BE PAINTED. TYP.
- M11 AIR COOLED CONDENSING UNITS FOR CER GH0120 AND GH0122 PROVIDED BY LAB EQUIPMENT VENDOR. CONDENSING UNITS SHALL BE INSTALLED ON ROOF PER ROOF MOUNTED CONDENSING UNIT DETAIL ON SHEET M201.3.
- M12 CONDENSING UNIT SHALL BE INSTALLED ON ROOF PER ROOF MOUNTED CONDENSING UNIT DETAIL ON SHEET M201.3.
- M13 ROUTE RS/RL DOWN THROUGH PIPE CHASE ROOF CURB DETAIL ON SHEET M201.3.
- M14 ROUTE RS/RL LINES TO CONDENSING UNIT ON ROOF. ROUTE AND SIZE PER MANUFACTURER REQUIREMENTS.
- M15 PROVIDE BACKDRAFT DAMPER IN TRANSFER DUCT.

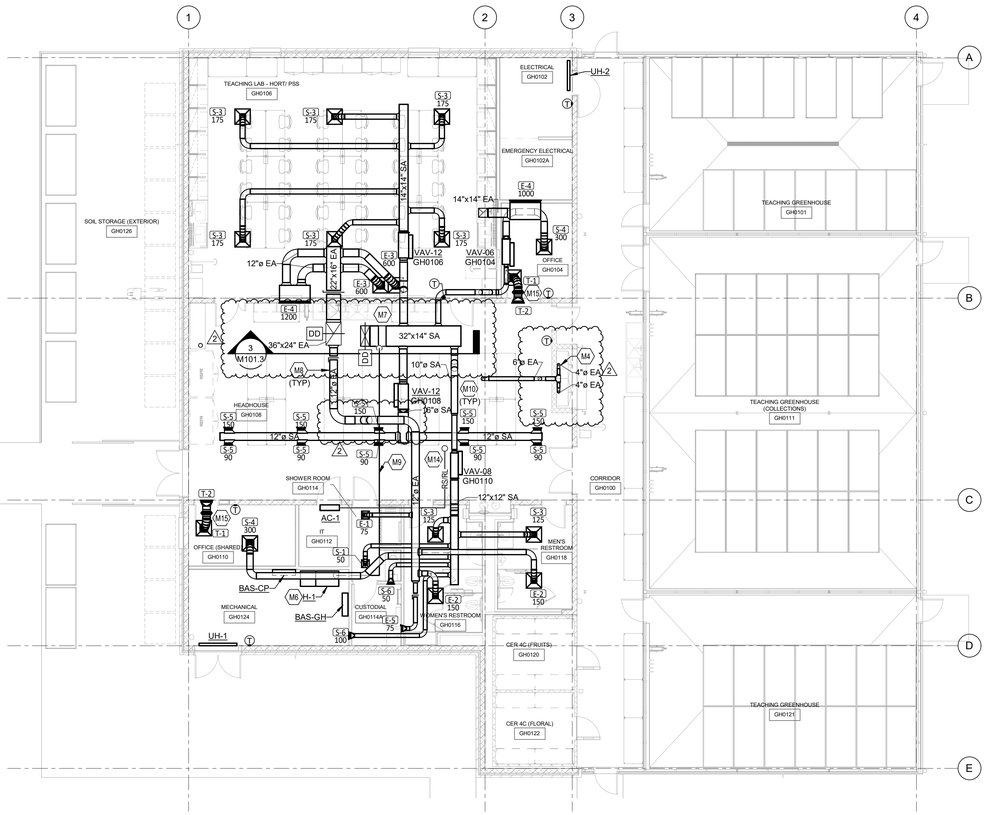

1 TEACHING GREENHOUSE - MECHANICAL

SCALE: 1/8" = 1'-0"

NORTH

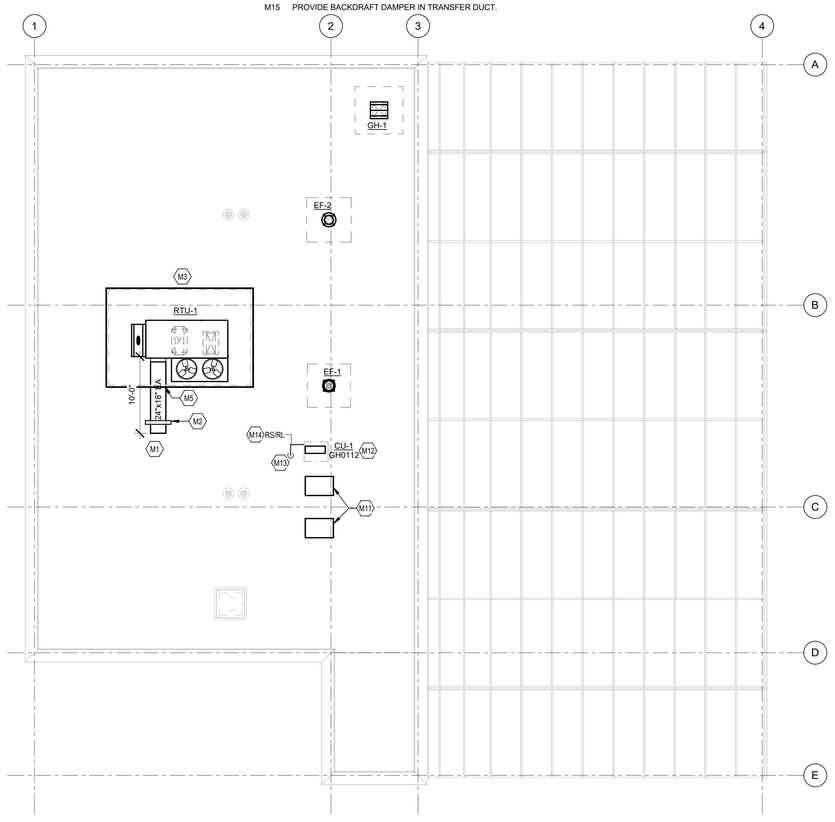

2 TEACHING GREENHOUSE ROOF - MECHANICAL

SCALE: 1/8" = 1'-0"

NORTH

This document is the product and property of Blaster Hodell Donnelly Preston, Inc. Neither the document nor the information it contains may be copied or used for other than the specific project for which it was prepared without the written consent of Blaster Hodell Donnelly Preston, Inc.

University of Kentucky

Flad Architects
MADISON
644 SOUTHEC DR
MADISON, WI 53711
PHONE 608.358.3681
WWW.FLADART.COM

BCAE ENGINEERING: DAYTON, OH
DELMAX CONSTRUCTION: URBANA, OH
TERRACON: LEXINGTON, KY

BHDP COLUMBUS
274 MARKET/SHERLEY
COLUMBUS, OHIO 43215
PHONE 614.621.1900

CMTA INC: LEXINGTON, KY
THP LIMITED INC: CINCINNATI, OH
NV5: PITTSBURGH, PA
BELL ENGINEERING: HOPKINSVILLE, KY
VIBRASURE: SAN FRANCISCO, CA

No.	Issue/Revision/Submission	Date
2	Addendum 1	11.08.2024
1	Permit and Bid Set	10.11.2024

UNIVERSITY OF KENTUCKY
TEACHING GREENHOUSE
1421 UNIVERSITY DR. LEXINGTON, KENTUCKY 40503

TEACHING GREENHOUSE - MECHANICAL

Project Manager: S. JOHNSON
Drawn: K. TEAGUE
Checked: N. ROGERS
Initial Drawing Date: 10.11.2024
Project Number: UKX05.00

M101.3

Autodesk Docs://UKX0500 University of Kentucky - Ag Research Facility 1/UKX0500-R23-TEACHING-GREENHOUSE-MECH.rvt — 11/8/2024 11:10:14 AM

Revit Template Version 2021

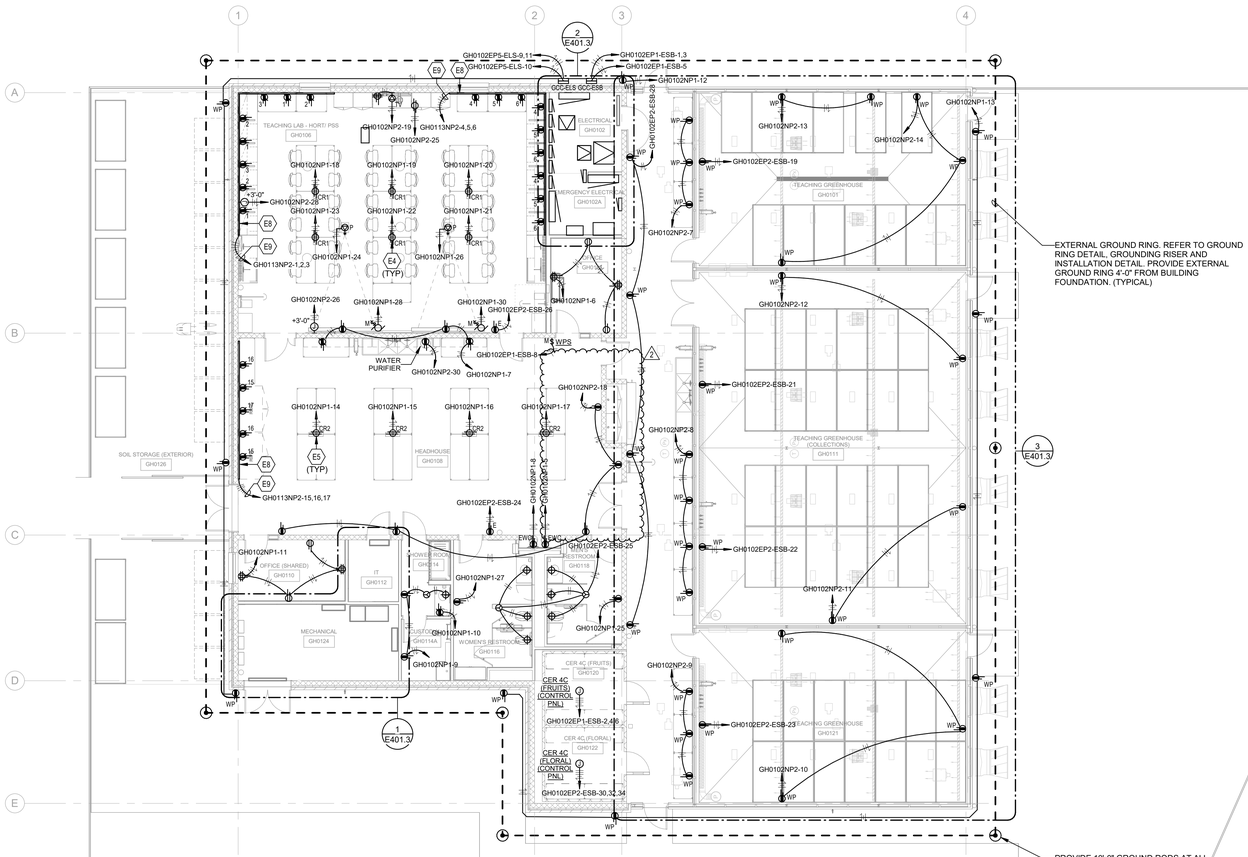

EXTERNAL GROUND RING. REFER TO GROUND RING DETAIL, GROUNDING RISER AND INSTALLATION DETAIL. PROVIDE EXTERNAL GROUND RING 4'-0" FROM BUILDING FOUNDATION. (TYPICAL)

PROVIDE 10'-0" GROUND RODS AT ALL VERTICAL STRUCTURAL COLUMNS, AT DOWN CONDUCTORS AND BUILDING STEEL. PROVIDE GROUND RODS, AT MINIMUM, 60' ON CENTER AROUND PERIMETER OF BUILDING. REFER TO STRUCTURAL DRAWINGS. (TYPICAL)

NOTE:
REFER TO TECHNOLOGY AND AV DRAWINGS FOR ADDITIONAL INFORMATION AND REQUIREMENTS.

GENERAL NOTES (POWER):

A. REFER TO THE ARCHITECT'S REFLECTED CEILING PLANS, ELEVATIONS, AND CASEWORK DETAILS FOR EXACT LOCATIONS OF ALL WALL AND CEILING MOUNTED ELECTRICAL DEVICES.

B. CONTRACTOR SHALL FOLLOW BRANCH CIRCUITING LAY-OUT, AS INDICATED ON THE FLOOR PLANS, WITH A MAXIMUM OF THREE (3) BRANCH CIRCUITS PER HOMERUN. EACH BRANCH CIRCUIT SHALL BE PROVIDED WITH A DEDICATED NEUTRAL CONDUCTOR. DEDICATED NEUTRAL CONDUCTORS SHALL BE CONSIDERED CURRENT CARRYING. IF ADDITIONAL CONDUCTORS ARE RAN IN THE SAME CONDUIT WITH THOSE INDICATED, CONTRACTOR SHALL DERATE ALL CURRENT CARRYING CONDUCTORS PER NEC 310.15(B)(3), AND UPSIZE CONDUIT AS REQUIRED PER NEC 300.17 AND ANNEX C. MULTIWIRE BRANCH CIRCUITS AS DEFINED IN NEC 100 / 210.4 (CIRCUITS SHARING A COMMON NEUTRAL CONDUCTOR) SHALL NOT BE PERMITTED.

C. IDENTIFY THE PANEL AND CIRCUIT NUMBER FOR ALL RECEPTACLES, SWITCHES, ETC. IN AREA OF CONSTRUCTION. PROVIDE CLEAR ADHESIVE LABELS WITH BLACK LETTERING. MARK INSIDES OF ALL DEVICE BOXES WITH PANEL AND CIRCUIT NUMBER.

D. RECEPTACLES THAT ARE CONTROLLED BY AN AUTOMATIC MEANS SUCH AS OCCUPANCY SENSOR OR ENERGY MANAGEMENT SYSTEM SHALL BE MARKED IN ACCORDANCE WITH NEC 406.3(E).

E. LOCATIONS OF ELECTRICAL CONNECTIONS AND LOCAL DISCONNECTS SHALL BE COORDINATED WITH MECHANICAL AND PLUMBING CONTRACTORS TO ENSURE ACCESS AND WORKING CLEARANCE IS MAINTAINED PER NEC. NOTIFY OTHER TRADES OF REQUIRED CLEARANCE AREAS TO AVOID ROUTING OF OTHER SYSTEMS IN THESE AREAS. DO NOT INSTALL ELECTRICAL EQUIPMENT OVER EQUIPMENT NAMEPLATES OR ACCESS PANELS OR THROUGH ACCESS/MAINTENANCE CLEARANCES OF EQUIPMENT BY OTHER TRADES.

GENERAL NOTES (LIGHTNING PROTECTION):

A. CONTRACTOR SHALL PROVIDE A COMPLETE LIGHTNING PROTECTION SYSTEM (LPS) FOR THIS FACILITY. REFER TO THE ELECTRICAL SPECIFICATIONS FOR ADDITIONAL REQUIREMENTS.

B. PROVIDE A UL LIGHTNING PROTECTION INSPECTION CERTIFICATE FOR THE FACILITY CERTIFIED FOR NFPA 780.

C. SYSTEM SHALL COMPLY WITH UL #96A "MASTER LABELED LIGHTNING PROTECTION SYSTEMS".

D. BOND EQUIPMENT OR SUBSYSTEMS INTO A SINGLE GROUNDING SYSTEM FOR THE FACILITY.

E. BOND ANY EXTERIOR METAL LADDERS TO THE SYSTEM AT BOTH UPPER AND LOWER ENDS OF EACH LADDER.

F. TERMINATE EACH DOWN CONDUCTOR TO BUILDING EXTERNAL GROUND RING. PROVIDE GROUND ROD AT EACH SUCH LOCATION.

G. BUILDING STEEL SHALL NOT BE USED AS A DOWN CONDUCTOR.

H. PENETRATIONS THROUGH SHEET METAL INCLUDING BUT NOT LIMITED TO COPINGS AND COUNTER FLASHINGS SHALL NOT BE ALLOWED. CONNECTIONS TO THE PARAPETS SHALL BE BY CLAMPS MADE TO FASTEN TO THE DRIP EDGE OF THE COPINGS WITHOUT PENETRATIONS TO AND OF THE COPINGS. REFER TO ARCHITECTURAL ROOF PLAN FOR DETAILS OF THE PENETRATIONS THROUGH HORIZONTAL ROOF AREA. PENETRATIONS THROUGH HORIZONTAL ROOF AREAS SHALL BE NO CLOSER THAN 16" TO ANY VERTICAL BUILDING SURFACE.

I. ALL ROOF PENETRATIONS AND ASSOCIATED LABOR COST SHALL BE AT THE EXPENSE OF THE CONTRACTOR, BUT SHALL BE INSTALLED BY THE ROOFING CONTRACTOR IN ORDER TO MAINTAIN ANY APPLICABLE ROOF WARRANTIES. ANY DEVIATIONS NECESSARY BY THIS FIRST MUST BE SUBMITTED TO THE ARCHITECT'S OFFICE FOR REVIEW. ANY COSTS ASSOCIATED WITH THE CHANGES TO THIS SYSTEM THAT ARE A RESULT OF PROPOSED DETAILS NOT BEING ACCEPTABLE TO THE COR, ARCHITECT OR ENGINEER SHALL BE AT THE EXPENSE OF THE CONTRACTOR. ALL REQUIRED CONNECTION DEVICES AND ADHESIVES SHALL BE REVIEWED BY THE ARCHITECT AND ENGINEER DURING SHOP DRAWING REVIEW.

J. PROVIDE SURGE PROTECTION DEVICES FOR ALL SYSTEMS IDENTIFIED IN NFPA 780.

K. ALL DOWN CONDUCTORS SHALL BE CONCEALED. DOWN CONDUCTORS IN GREENHOUSE TO BE ROUTED IN SCH 80 PVC CONDUIT, TIGHT TO STRUCTURE.

L. REFER TO PLUMBING AND MECHANICAL ROOF PLANS FOR EQUIPMENT LOCATIONS.

KEYNOTES

E4 CORD REEL WITH GFCI RECEPTACLE AND RECESSED ENCLOSURE. HUBBELL MODEL #HBLIWC45123GF220HG / HBLIPRBOX (TYPICAL FOR ALL IN TEACHING LAB).

E5 CORD REEL WITH GFCI RECEPTACLE. HUBBELL MODEL #HBLIWC45123GF220HG (TYPICAL FOR HEADHOUSE).

E8 PROVIDE WIREMOLD 3000 SERIES TWO-PIECE STEEL SURFACE RACEWAY WITH GRAY BAKED ENAMEL FINISH. PROVIDE GFCI DUPLEX RECEPTACLE ON 36" CENTERS. REFER TO CASEWORK DRAWINGS FOR MOUNTING HEIGHT AND ADDITIONAL REQUIREMENTS. RACEWAY SHALL BE FLUSH WITH END OF CASEWORK. DRAWINGS INDICATE MINIMUM NUMBER OF DUPLEX RECEPTACLES. EACH OUTLET SHALL BE LABELED PER DETAIL. PROVIDE ALL REQUIRED COUPLERS, CORNERS, JUNCTION BOXES, COVERS, RECEPTACLES, OUTLETS, FACEPLATES, ETC. FOR A COMPLETE AND WORKING SYSTEM.

E9 EACH BRANCH CIRCUIT SHALL BE PROVIDED WITH DEDICATED NEUTRAL.

NOTE:
COORDINATE ALL PENETRATIONS THROUGH GREENHOUSE GLASS WITH UTILITY ENTRY LOCATION PROVIDED BY GREENHOUSE CONSULTANT. SEAL AROUND ENTRY BOX WIL SILICONE BASED SEALANT; ASTM C920, TYPE S. REFER TO GREENHOUSE CONSULTANT DRAWINGS FOR ADDITIONAL INFORMATION.

1 NORTH

TEACHING GREENHOUSE - FIRST FLOOR PLAN - POWER

SCALE: 1/8" = 1'-0"

This document is the product and property of Baxter Hodell Donnelly Preston, Inc. Neither the document nor the information it contains may be copied or used for other than the specific project for which it was prepared without the written consent of Baxter Hodell Donnelly Preston, Inc.

Revit Template Version 2021

University of Kentucky

No.	Issue/Revision/Submission	Date
2	Addendum 1	11.08.2024
1	BID AND PERMIT	10.11.2024

Flad Architects
MADISON
644 SOUTHPOINTE COURT, SUITE 111
COLLEGEVILLE, PA 19426
PHONE 608.358.3681
WWW.FLADARCH.COM

BCAE ENGINEERING: DAYTON, OH
DELMAX CONSTRUCTION: URBANA, OH
TERRACON: LEXINGTON, KY

BHDP
COLUMBUS
231 NORTH 5TH BLVD.
SUITE 200
COLUMBUS, OHIO 43215
PHONE 614.621.4500

CMTA INC: LEXINGTON, KY
THP LIMITED INC: CINCINNATI, OH
NV5: PITTSBURGH, PA
BELL ENGINEERING: HOPKINSVILLE, KY
VIBRASURE: SAN FRANCISCO, CA

UNIVERSITY OF KENTUCKY
TEACHING GREENHOUSE
1421 UNIVERSITY DR. LEXINGTON, KENTUCKY 40503

TEACHING GREENHOUSE - FIRST FLOOR PLAN - POWER

STATE OF KENTUCKY
BRIAN K BAUMGARTLE
23170
LICENSED PROFESSIONAL ENGINEER

Project Manager: B. BAUMGARTLE
Drawn: G. CRISP
Checked: B. BAUMGARTLE
Initial Drawing Date: 10.11.2024
Project Number: UKX05.00

E201.3

Autodesk Docs://UKX0500 University of Kentucky - Ag Research Facility 1/UKX0500-R23-TEACHING-GREENHOUSE-ELEC.rvt — 11/8/2024 10:55:53 AM

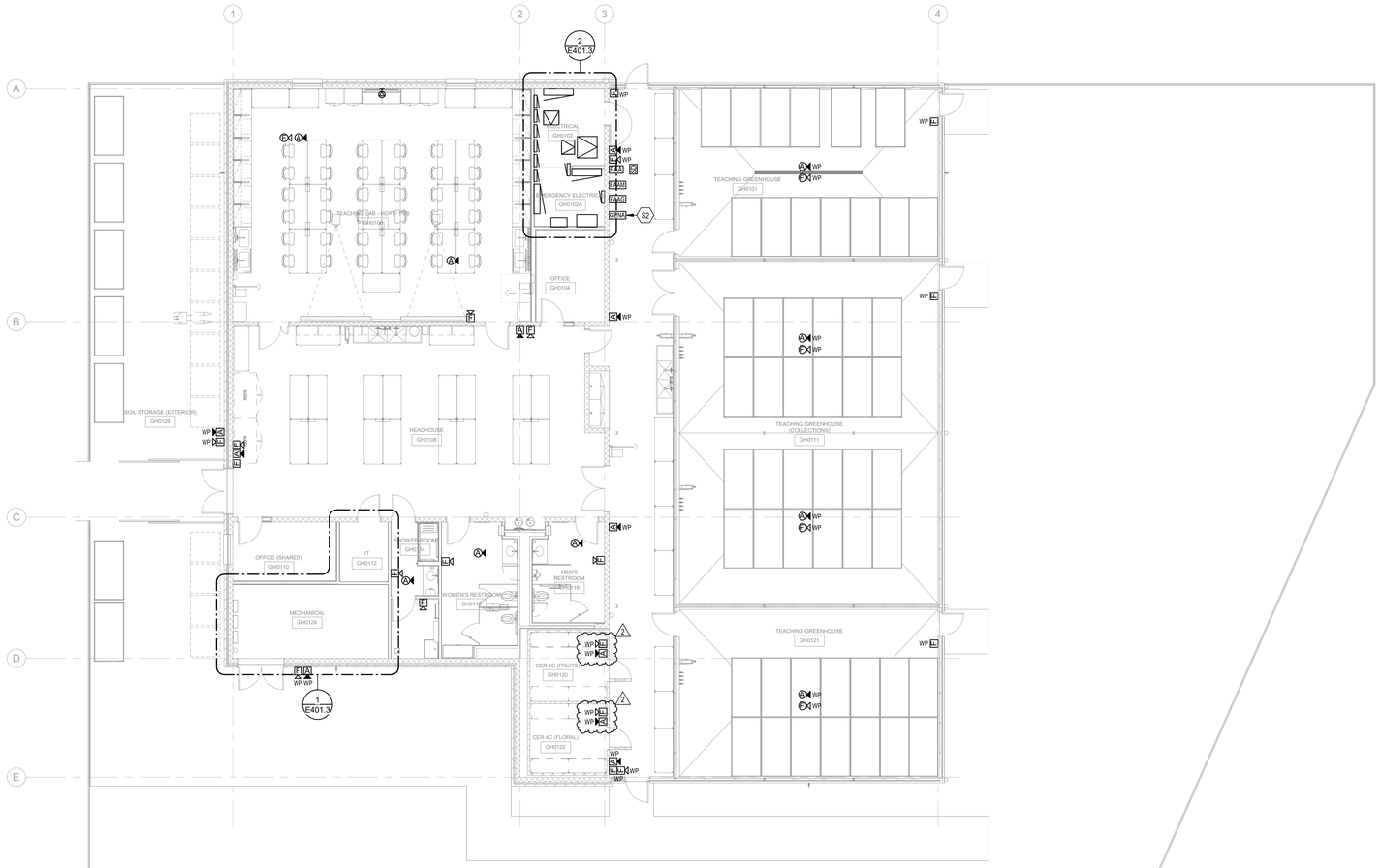

1 NORTH

TEACHING GREENHOUSE - FIRST FLOOR PLAN - FIRE ALARM

SCALE: 1/8" = 1'-0"

GENERAL NOTES (SYSTEMS):

A. REFER TO THE ARCHITECT'S REFLECTED CEILING PLANS, ELEVATIONS, AND CASEWORK DETAILS FOR EXACT LOCATIONS OF ALL WALL AND CEILING MOUNTED ELECTRICAL DEVICES.

B. CONTRACTOR SHALL FOLLOW BRANCH CIRCUITING LAY-OUT, AS INDICATED ON THE FLOOR PLANS, WITH A MAXIMUM OF THREE (3) BRANCH CIRCUITS PER HOMERUN. EACH BRANCH CIRCUIT SHALL BE PROVIDED WITH A DEDICATED NEUTRAL CONDUCTOR. DEDICATED NEUTRAL CONDUCTORS SHALL BE CONSIDERED CURRENT CARRYING. IF ADDITIONAL CONDUCTORS ARE RAN IN THE SAME CONDUIT WITH THOSE INDICATED, CONTRACTOR SHALL DERATE ALL CURRENT CARRYING CONDUCTORS PER NEC 310.15(B)(3), AND UPSIZE CONDUIT AS REQUIRED PER NEC 300.17 AND ANNEX C. MULTIWIRE BRANCH CIRCUITS AS DEFINED IN NEC 100 / 210.4 (CIRCUITS SHARING A COMMON NEUTRAL CONDUCTOR) SHALL NOT BE PERMITTED.

C. IDENTIFY THE PANEL AND CIRCUIT NUMBER FOR ALL RECEPTACLES, SWITCHES, ETC. IN AREA OF CONSTRUCTION. PROVIDE CLEAR ADHESIVE LABELS WITH BLACK LETTERING. IN HEALTHCARE FACILITIES, ENGRAVE EMERGENCY DEVICE COVERPLATES IN PATIENT CARE AREAS. MARK INSIDES OF ALL DEVICE BOXES WITH PANEL AND CIRCUIT NUMBER.

D. REFER TO "SYSTEM INSTALLATION MATRIX" (ON SYSTEMS LEGEND SHEET) AND SPECIFICATIONS FOR CONTRACTOR REQUIREMENTS OF EACH SYSTEM.

E. THE CONTRACTOR SHALL ROUTE ALL "SYSTEM CONDUIT STUB-UPS" TO THE NEAREST CORRIDOR CABLING PATH (SEE "STUB-UP" DETAILS). REFER TO CABLING PATH INSTALLATION DETAIL FOR ADDITIONAL REQUIREMENTS.

F. CONTRACTOR SHALL PAINT ALL SYSTEMS CONDUIT STUB-UPS LIGHT BLUE FOR SYSTEMS CABLING INTO THE CORRIDOR CABLING PATH. PROVIDE PULL STRINGS IN ALL NEW CONDUIT RUNS FOR SYSTEM CABLING INSTALLATION.

KEYNOTES

S2 GENERATOR ANNUNCIATOR PANEL. COORDINATE EXACT LOCATION WITH ARCHITECT AND OWNER PRIOR TO ROUGH-IN/INSTALLATION.

NOTE:
COORDINATE ALL PENETRATIONS THROUGH GREENHOUSE GLASS WITH UTILITY ENTRY LOCATION PROVIDED BY GREENHOUSE CONSULTANT. SEAL AROUND ENTRY BOX WIL SILICONE BASED SEALANT; ASTM C920, TYPE S. REFER TO GREENHOUSE CONSULTANT DRAWINGS FOR ADDITIONAL INFORMATION.

This document is the product and property of Baxter Hodell Donnelly Preston, Inc. Neither the document nor the information it contains may be used or used for other than the specific project for which it was prepared without the written consent of Baxter Hodell Donnelly Preston, Inc.

Revit Template Version 2021

University of Kentucky

No.	Issue/Revision/Submission	Date
2	Addendum 1	11.08.2024
1	BID AND PERMIT	10.11.2024

Flad Architects
MADISON
644 SCIENCE DR.
MADISON, WI 53711
PHONE 608.358.3661
WWW.FLADARCH.COM
BCAE ENGINEERING: DAYTON, OH
DELMAX CONSTRUCTION: URBANA, OH
TERRACON: LEXINGTON, KY

BHDP
COLUMBUS
274 MARCONI BLVD.
SUITE 200
COLUMBUS, OHIO 43215
PHONE 614.481.6300
CMTA INC: LEXINGTON, KY
THP LIMITED INC: CINCINNATI, OH
NV5: PITTSBURGH, PA
BELL ENGINEERING: HOPKINSVILLE, KY
VIBRASURE: SAN FRANCISCO, CA

UNIVERSITY OF KENTUCKY
TEACHING GREENHOUSE
1421 UNIVERSITY DR. LEXINGTON, KENTUCKY 40503

TEACHING GREENHOUSE - FIRST FLOOR PLAN - FIRE ALARM

STATE OF KENTUCKY
BRIAN K. BAUMGARTLE
23719
LICENSED PROFESSIONAL ENGINEER

Project Manager: B. BAUMGARTLE
Drawn: G. CRISP
Checked: B. BAUMGARTLE
Initial Drawing Date: 10.11.2024
Project Number: UKX05.00

E301.3

Autodesk Docs://UKX0500 University of Kentucky - Ag Research Facility 1/UKX0500-R23-TEACHING-GREENHOUSE-ELEC.rvt — 11/8/2024 10:55:55 AM

UNIVERSITY OF KENTUCKY

1421 UNIVERSITY DRIVE LEXINGTON, KENTUCKY 40503

GREENHOUSE DESIGNER, MANUFACTURER & SUPPLIER:

PROSPIANT

GROWTH ROOTED IN PARTNERSHIP

5513 VINE STREET : CINCINNATI, OH 45217
WWW.PROSPIANT.COM
PH. (513) 242-0310

PROSPIANT, INC. JOB NO. 2420004

PROJECT CONTACT: JIM DUNBAR

CONSULTING ENGINEER:
MOHAMED ALY, PE
1460 BETTY DRIVE : BEAVERCREEK, OH 45434
PH. (513) 460-1977

Drawing Index	
SHEET NUMBER	SHEET TITLE
GH–0.00	COVER SHEET
GH–1.00	POST PLAN
GH–1.01	FOUNDATION – PIN PLAN
GH–1.10	POST FOOT DETAILS
GH–2.10	TRUSS CROSS SECTION
GH–3.00	SIDEWALL ELEVATIONS
GH–3.01	SIDEWALL PARTITION ELEVATIONS
GH–3.10	GABLE ELEVATIONS
GH–3.11	GABLE PARTITION ELEVATIONS
GH–4.30	CORNER & CLOSURE DETAILS
GH–4.31	CORNER & CLOSURE DETAILS
GH–4.32	CORNER & CLOSURE DETAILS
GH–6.00	DOOR SCHEDULE & DETAILS
GE–1.00	EQUIPMENT PLAN
GE–1.01	BENCH – IRRIGATION – LIGHT PLANS
GE–2.00	EQUIPMENT SECTION(S)

NOT FOR CONSTRUCTION

PROGRESS SET
DATE 10/31/2024
PROSPIANT, INC. IS NOT RESPONSIBLE FOR CONSTRUCTION THAT IS BUILT FROM SET LABELED "PROGRESS SET"

SUBJECT TO WRITTEN CONFIRMATION OF CONTRACT AGREEMENT, THE ATTACHED DRAWINGS, & SPECIFICATIONS REMAIN THE PROPERTY OF PROSPIANT, INC. AND THE STRUCTURAL CALCULATIONS REMAIN THE PROPERTY OF MOHAMED ALY, PE

GREENHOUSE CONSULTANT:
PROSPIANT
5513 Vine Street - Cincinnati, OH 45217
(513) 242-0310 - www.Prospiant.com

THE DRAWINGS AND DATA IN THIS DOCUMENT, AND THE INTELLECTUAL PROPERTY AND CONFIDENTIAL INFORMATION IT CONTAINS ARE THE PROPERTY OF PROSPIANT, INC. - 5513 VINE STREET, CINCINNATI, OH 45217. ANY PARTY ACCEPTING THIS DOCUMENT DOES SO IN CONFIDENCE AND AGREES THAT IT SHALL NOT BE DUPLICATED, IN WHOLE OR IN PART, NOR DISCLOSED TO OTHERS WITHOUT THE WRITTEN CONSENT OF PROSPIANT, INC. © 2024

CONSULTING ENGINEER:
MOHAMED ALY, PE
1460 Betty Drive - Beavercreek, OH 45434
(513) 460-1977

NOT FOR CONSTRUCTION

PROSPIANT, INC.
IS NOT RESPONSIBLE FOR CONSTRUCTION THAT IS BUILT FROM SET LABELED "NOT FOR CONSTRUCTION"

ENGINEER'S SEAL APPLIES TO DESIGN OF STRUCTURAL COMPONENTS ONLY

TEACHING GREENHOUSE
FOR
UNIVERSITY OF KENTUCKY
1421 UNIVERSITY DRIVE LEXINGTON, KENTUCKY 40503

NO.	DATE	DESCRIPTION

RELEASE AND ISSUE:
Schematic Set 09/06/2024

REVIEWED BY:	DRAWN BY:
----	BD/CBG

PROJECT No.: 2420004

COVER SHEET

GH-0.00

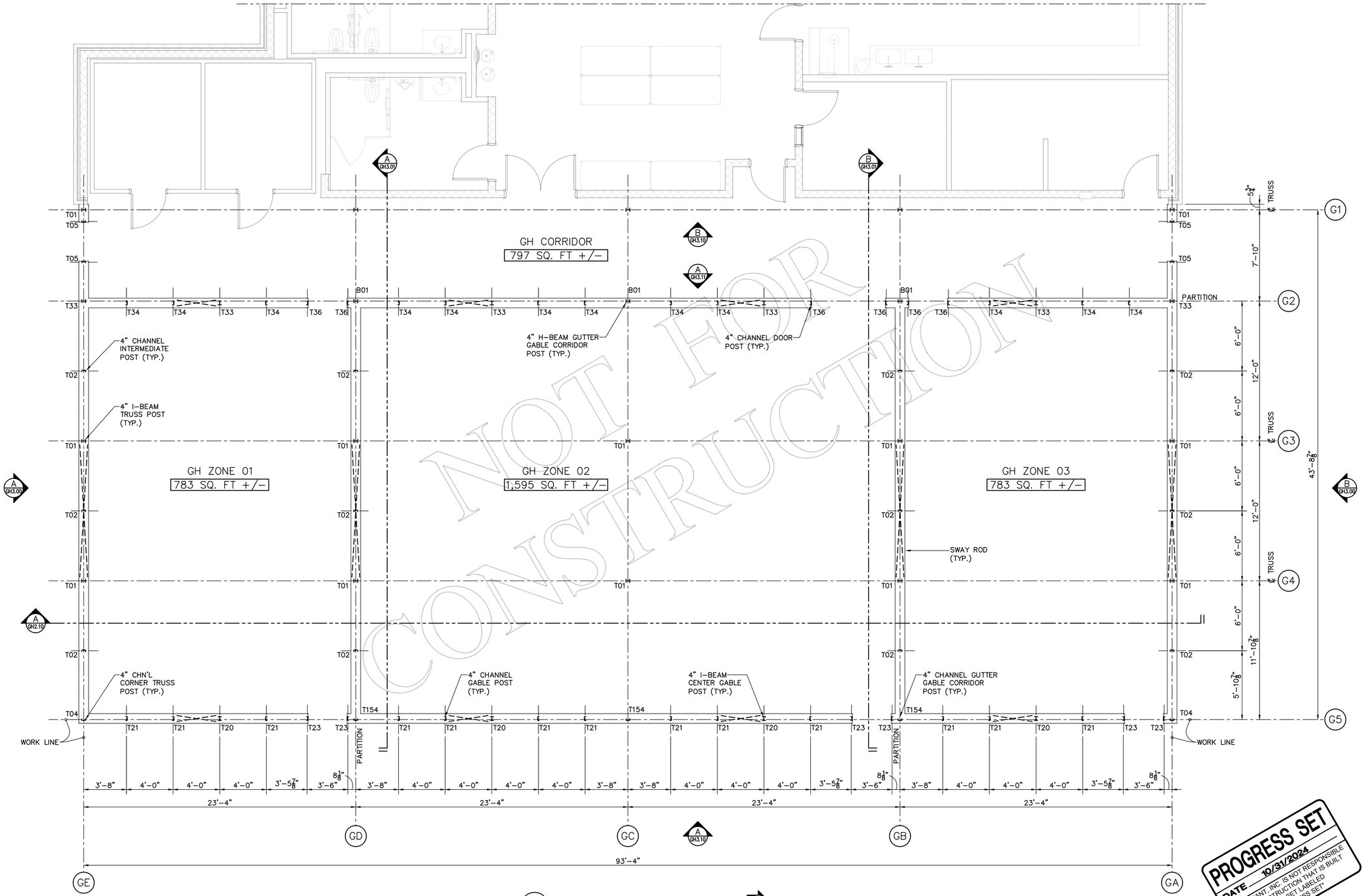

A TEACHING HOUSE POST PLAN
SCALE: 1/4"=1'-0"

PLAN NOTES:

1. SEE DWG. GH-1.10 FOR POST BASE/ANCHOR BOLT DETAILS TX-TX.
2. SEE DWG. GH-1.01 FOR FOUNDATION WALL LAYOUT.
3. SEE DWG. GH-6.00 FOR DOOR DETAILS.
4. SEE DWG. GE-1.00 FOR EQUIPMENT PLAN.

PROGRESS SET
DATE 10/31/2024
PROSPIANT, INC. IS NOT RESPONSIBLE FOR CONSTRUCTION THAT IS BUILT FROM SET LABELED "PROGRESS SET"

NOT FOR CONSTRUCTION

GREENHOUSE CONSULTANT:
PROSPIANT
5513 Vine Street - Cincinnati, OH 45217
(513) 242-0310 - www.Prospiant.com

THE DRAWINGS AND DATA IN THIS DOCUMENT, ARE THE INTELLECTUAL PROPERTY AND CONFIDENTIAL INFORMATION IT CONTAINS ARE THE PROPERTY OF PROSPIANT, INC. - 5513 VINE STREET, CINCINNATI, OH 45227. ANY PARTY ACCEPTING THIS DOCUMENT DOES SO IN CONFIDENCE AND AGREES THAT IT SHALL NOT BE DUPLICATED, IN WHOLE OR IN PART, NOR DISCLOSED TO OTHERS WITHOUT THE WRITTEN CONSENT OF PROSPIANT, INC. © 2024

CONSULTING ENGINEER:
MOHAMED ALY, PE
1460 Betty Drive - Beavercreek, OH 45434
(513) 460-1977

NOT FOR CONSTRUCTION

PROSPIANT, INC.
IS NOT RESPONSIBLE FOR CONSTRUCTION THAT IS BUILT FROM SET LABELED "NOT FOR CONSTRUCTION"

ENGINEER'S SEAL APPLIES TO DESIGN OF STRUCTURAL COMPONENTS ONLY

TEACHING GREENHOUSE
FOR
UNIVERSITY OF KENTUCKY
1421 UNIVERSITY DRIVE LEXINGTON, KENTUCKY 40503

NO.	DATE	DESCRIPTION
1		
2		
3		
4		
5		
6		
7		

RELEASE AND ISSUE:
Schematic Set 09/06/2024

REVIEWED BY: ----
DRAWN BY: BD/CBG

PROJECT No.: 2420004

POST PLAN

GH-1.00

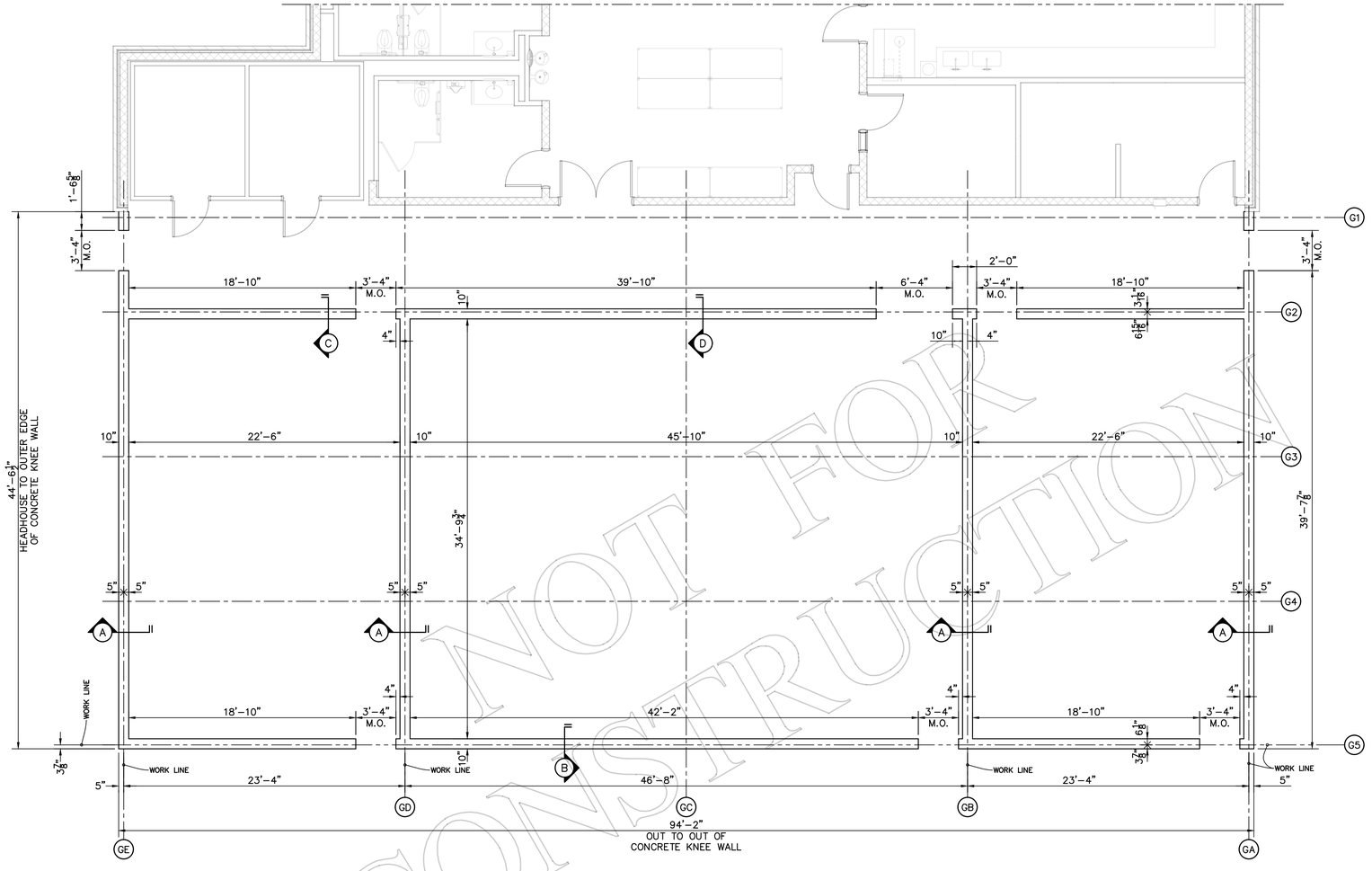

A TEACHING HOUSE FOUNDATION PLAN
SCALE: 3/16"=1'-0"

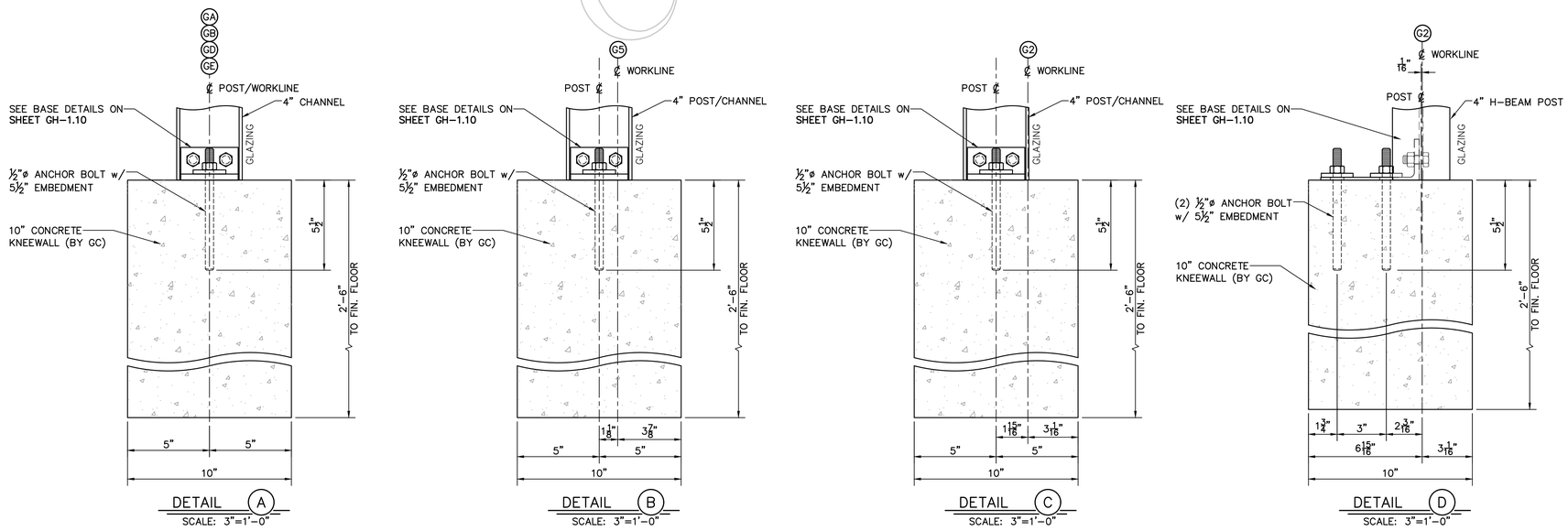

PROGRESS SET
DATE 10/31/2024
PROSPIANT, INC. IS NOT RESPONSIBLE FOR CONSTRUCTION THAT IS BUILT FROM SET LABELED "PROGRESS SET"

FOUNDATION NOTES:

1. PROSPIANT, INC. IS NOT RESPONSIBLE FOR THE DESIGN, MATERIALS AND WORKMANSHIP OF THE FOOTING, CURBS, AND FINISHED FLOOR.
2. THE ARCHITECT/ENGINEER SHALL ENSURE THAT FOOTINGS & CURBS ARE PROPERLY DESIGNED TO ADEQUATELY SECURE THE ANCHOR BOLTS, AND RESIST THE LOADS IMPOSED BY THE GREENHOUSE SYSTEM.
3. IT IS THE RESPONSIBILITY OF THE GENERAL CONTRACTOR TO ENSURE THAT THE FOOTING, CURBS, & FINISH FLOOR ARE CONSTRUCTED PER THE ARCHITECTS DESIGN, AND THAT THE FOUNDATION WALLS BE SQUARE AND TRUE WITHIN ±1/4" OF THE DIMENSIONS SHOWN ON THIS DRAWING FOR PROPER GREENHOUSE INSTALLATION.
4. IT IS THE RESPONSIBILITY OF THE GENERAL CONTRACTOR TO ENSURE THAT THE REBAR INSTALLATION IS COORDINATED WITH THE GREENHOUSE COLUMN LOCATIONS TO ALLOW DRILLING HOLES FOR THE HILTI HIT-HY 200-R V3 OR HILTI HIT-HY 200-A V3 EPOXY SET ANCHOR EMBEDMENTS (OR CAST-IN-PLACE). SEE DWG. GH-1.00 FOR POST LOCATIONS AND DWG. GH-1.10 FOR POST BASE DETAILS.

CONSTRUCTION
NOT FOR

GREENHOUSE CONSULTANT:
PROSPIANT
5513 Vine Street - Cincinnati, OH 45217
(513) 242-0310 - www.Prospiant.com

THE DRAWINGS AND DATA IN THIS DOCUMENT, AND THE INTELLECTUAL PROPERTY AND CONFIDENTIAL INFORMATION IT CONTAINS ARE THE PROPERTY OF PROSPIANT, INC. - 5513 VINE STREET, CINCINNATI, OH 45217. ANY PARTY ACCEPTING THIS DOCUMENT DOES SO IN CONFIDENCE AND AGREES THAT IT SHALL NOT BE DUPLICATED IN WHOLE OR IN PART, NOR DISCLOSED TO OTHERS WITHOUT THE WRITTEN CONSENT OF PROSPIANT, INC. © 2024

CONSULTING ENGINEER:
MOHAMED ALY, PE
1460 Betty Drive - Beavercreek, OH 45434
(513) 460-1977

NOT FOR CONSTRUCTION

PROSPIANT, INC.
IS NOT RESPONSIBLE FOR CONSTRUCTION THAT IS BUILT FROM SET LABELED "NOT FOR CONSTRUCTION"

ENGINEER'S SEAL APPLIES TO DESIGN OF STRUCTURAL COMPONENTS ONLY

TEACHING GREENHOUSE FOR UNIVERSITY OF KENTUCKY

1421 UNIVERSITY DRIVE LEXINGTON, KENTUCKY 40503

NO.	DATE	DESCRIPTION

RELEASE AND ISSUE:
Schematic Set 09/06/2024

REVIEWED BY: ----
DRAWN BY: BD/CBG

PROJECT No.: 2420004

FOUNDATION - PIN PLAN

GH-1.01

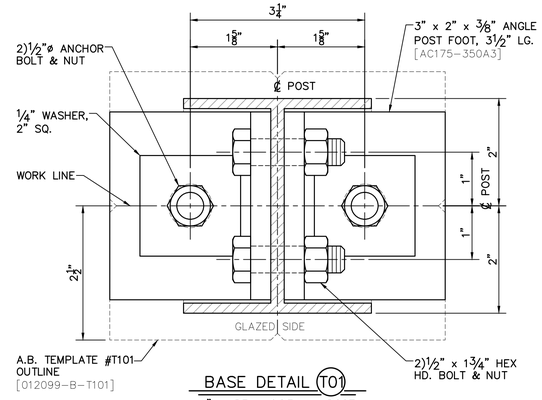

BASE DETAIL T01
4" H-BEAM SIDEWALL POST
A.B. TEMPLATE T101
USE SHIMS ASM350

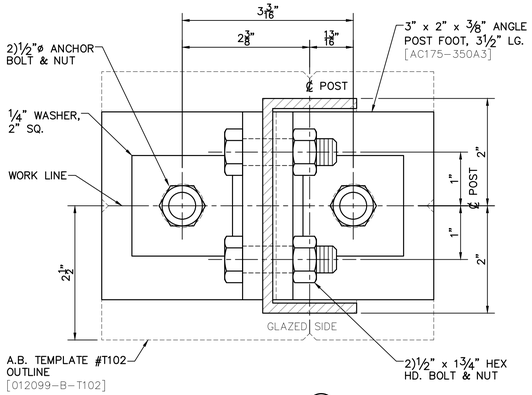

BASE DETAIL T02
4" CHANNEL SIDEWALL INTERMEDIATE POST
A.B. TEMPLATE T102
USE SHIMS ASM350

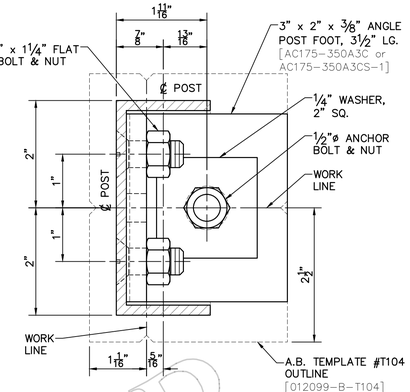

BASE DETAIL T04
4" CHANNEL GLASS GUTTER CORNER
A.B. TEMPLATE T104
USE SHIM ASM350

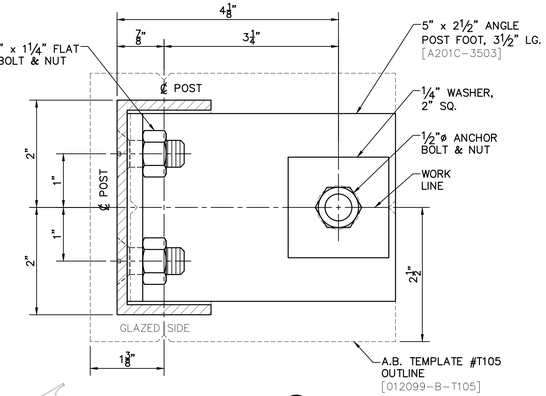

BASE DETAIL T05
4" CHANNEL SIDEWALL DOOR POST @ MASONRY OPN'G.
A.B. TEMPLATE T105
USE ASM350-500 SHIM

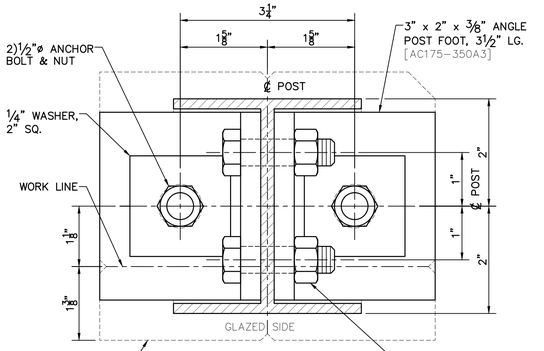

BASE DETAIL T20
4" H-BEAM GABLE POST
A.B. TEMPLATE T120
USE SHIMS ASM350

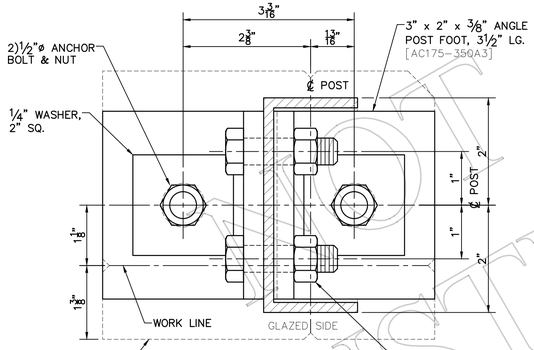

BASE DETAIL T21
4" CHANNEL GABLE POST
A.B. TEMPLATE T121
USE SHIMS ASM350

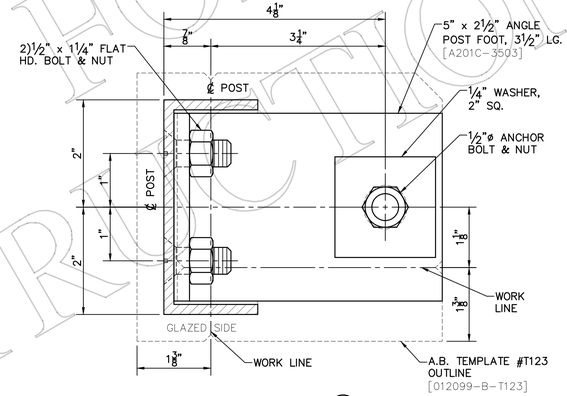

BASE DETAIL T23
4" CHANNEL GABLE DOOR POST @ MASONRY OPN'G.
A.B. TEMPLATE T123
USE ASM350-500 SHIM

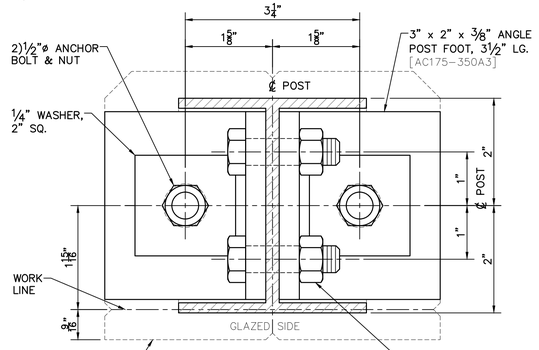

BASE DETAIL T33
4" H-BEAM GABLE PARTITION POST
A.B. TEMPLATE T133
USE SHIMS ASM350

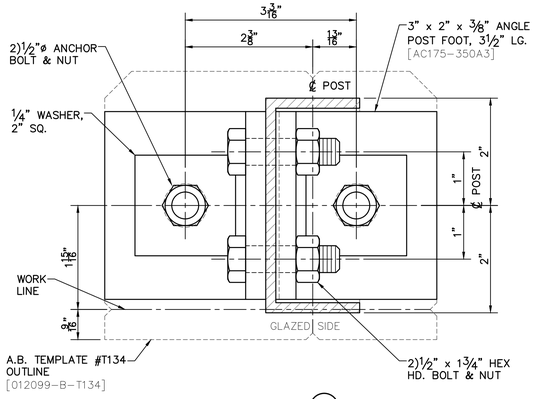

BASE DETAIL T34
4" CHANNEL GABLE PARTITION POST
A.B. TEMPLATE T134
USE SHIMS ASM350

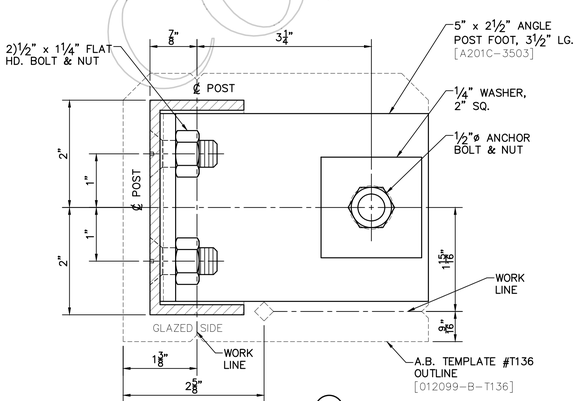

BASE DETAIL T36
4" CHANNEL GABLE PARTITION DOOR POST @ MASONRY OPN'G.
A.B. TEMPLATE T136
USE ASM350-500 SHIM

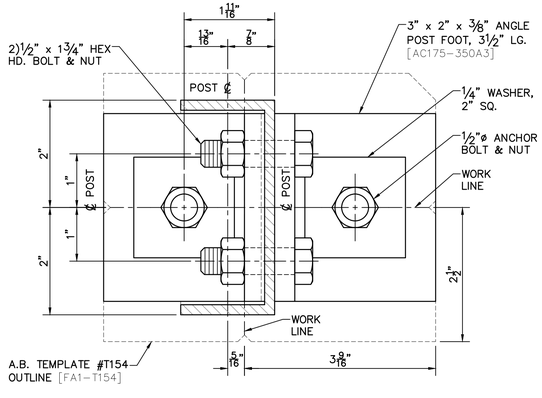

BASE DETAIL T154
4" CHANNEL GLASS GUTTER GABLE CORRIDOR POST
A.B. TEMPLATE T154
USE SHIM ASM350

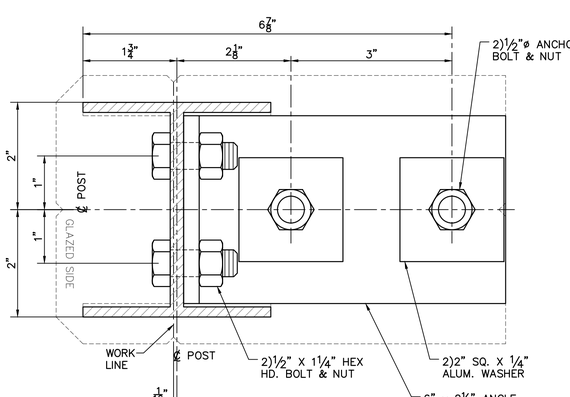

POST BASE DETAIL B5
4" H-BEAM GABLE DOOR POST

PROGRESS SET
DATE 10/31/2024
PROSPIANT, INC. IS NOT RESPONSIBLE FOR CONSTRUCTION THAT IS BUILT FROM SET LABELED "PROGRESS SET"

EPOXY-SET ANCHOR BOLTS:

1. ANCHOR BOLTS TO BE GRADE 316 STAINLESS STEEL ½" x 6½" LG. THREADED ROD WITH MIN 4½" EMBEDMENT, SET IN HILTI HIT-HY 200-R V3 OR HILTI HIT-HY 200-A V3 EPOXY ADHESIVE.
2. EPOXY ANCHORS TO BE STORED AND INSTALLED PER MANUFACTURER'S INSTRUCTIONS SUPPLIED WITH THE EPOXY CARTRIDGE.

NOT FOR CONSTRUCTION

GREENHOUSE CONSULTANT:
PROSPIANT
5513 Vine Street - Cincinnati, OH 45217
(513) 242-0310 - www.Prospiant.com

THE DRAWINGS AND DATA IN THIS DOCUMENT, AND THE INTELLECTUAL PROPERTY AND CONFIDENTIAL INFORMATION IT CONTAINS ARE THE PROPERTY OF PROSPIANT, INC. - 5513 VINE STREET, CINCINNATI, OH 45217. ANY PARTY ACCEPTING THIS DOCUMENT DOES SO IN CONFIDENCE AND AGREES THAT IT SHALL NOT BE DUPLICATED, IN WHOLE OR IN PART, NOR DISCLOSED TO OTHERS WITHOUT THE WRITTEN CONSENT OF PROSPIANT, INC. © 2024

CONSULTING ENGINEER:
MOHAMED ALY, PE
1460 Betty Drive - Beavercreek, OH 45434
(513) 460-1977

NOT FOR CONSTRUCTION

PROSPIANT, INC. IS NOT RESPONSIBLE FOR CONSTRUCTION THAT IS BUILT FROM SET LABELED "NOT FOR CONSTRUCTION"

ENGINEER'S SEAL APPLIES TO DESIGN OF STRUCTURAL COMPONENTS ONLY

TEACHING GREENHOUSE
FOR
UNIVERSITY OF KENTUCKY
1421 UNIVERSITY DRIVE LEXINGTON, KENTUCKY 40503

NO.	DESCRIPTION	DATE

RELEASE AND ISSUE:
Schematic Set 09/06/2024

REVIEWED BY: ----
DRAWN BY: BD/CBG

PROJECT No.: 2420004

POST FOOT DETAILS

GH-1.10

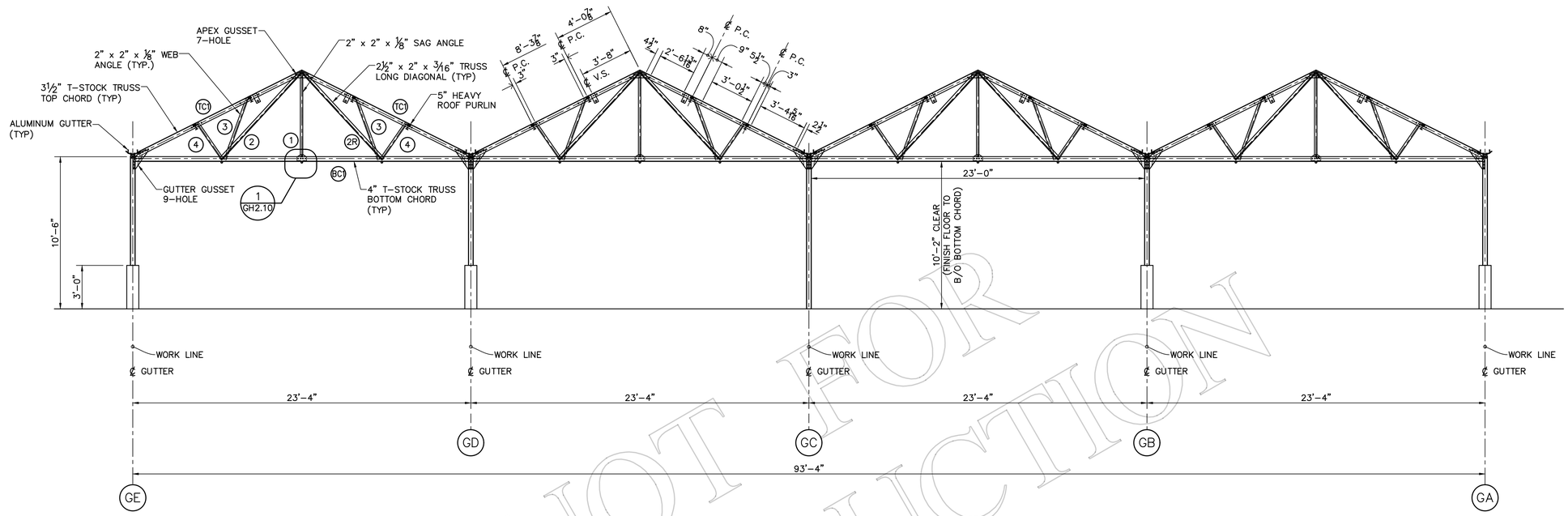

A TEACHING HOUSE TRUSS CROSS SECTION
SCALE: ¼"=1'–0"

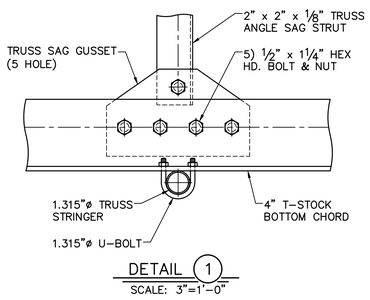

DETAIL 1
SCALE: 3"=1'–0"

23'–4" TRUSS SCHEDULE		
ID	DESCRIPTION	LENGTH
TC	3½" T–STOCK TOP CHORD	149.681"
BC	4" T–STOCK BOTTOM CHORD	276.02"
1	2" X 2" X ⅛" SAG ANGLE	67⅜"
2	2½" X 2" X 3⁄16" LONG DIAGONAL ANGLE	97 15⁄16"
3	2" X 2" X ⅛" STRUT ANGLE	53½"
4	2" X 2" X ⅛" STRUT ANGLE	36⅜"

PROGRESS SET
DATE 10/31/2024
PROSPIANT, INC. IS NOT RESPONSIBLE FOR CONSTRUCTION THAT IS BUILT FROM SET LABELED "PROGRESS SET"

TRUSS NOTES:

1. ALL TRUSS GUSSETS TO BE ¼" ALUMINUM PLATE.
2. ALL TRUSS STRUT AND GUSSET BOLTS TO BE ½" DIA. HIGH STRENGTH (J429, GRADE 5).
3. ALL PURLIN CONNECTION BOLTS TO BE ⅜" DIA.
4. ALL TRUSS MEMBERS TO HAVE 1" END CLEARANCE (E.C.) UNLESS NOTED OTHERWISE
5. ALL HORIZONTAL TRUSS STRINGERS TO BE ATTACHED TO TRUSS BOTTOM CHORD USING U–BOLTS, (XX) RUNS REQ'.D ATTACH ENDS OF STRINGERS TO THE BACK SIDE OF GABLE POSTS USING 2½" x 2½" x ⅛"ALUM. HORIZONTAL/SLOPED ANGLES TO GABLE POSTS WITH ⅜" x 1" HEX. HD. BOLTS AND NUTS. U–BOLT STRINGER TO ANGLE.
6. TRUSS STRINGERS ARE NOT DESIGNED OR CERTIFIED TO SUPPORT ANY ADDITIONAL HANGING LOADS. NO CONDUIT, PIPING, EQUIPMENT OR OTHER COMPONENTS ARE TO BE ATTACHED TO OR SUSPENDED FROM THE TRUSS STRINGERS

NOT FOR CONSTRUCTION

GREENHOUSE CONSULTANT:
PROSPIANT
5513 Vine Street - Cincinnati, OH 45217
(513) 242-0310 - www.Prospiant.com

THE DRAWINGS AND DATA IN THIS DOCUMENT, AND THE INTELLECTUAL PROPERTY AND CONFIDENTIAL INFORMATION IT CONTAINS ARE THE PROPERTY OF PROSPIANT, INC. - 5513 VINE STREET, CINCINNATI, OH 45217. ANY PARTY ACCEPTING THIS DOCUMENT DOES SO IN CONFIDENCE AND AGREES THAT IT SHALL NOT BE DUPLICATED, IN WHOLE OR IN PART, NOR DISCLOSED TO OTHERS WITHOUT THE WRITTEN CONSENT OF PROSPIANT, INC. © 2024

CONSULTING ENGINEER:
MOHAMED ALY, PE
1460 Betty Drive - Beavercreek, OH 45434
(513) 460-1977

NOT FOR CONSTRUCTION

PROSPIANT, INC.
IS NOT RESPONSIBLE FOR
CONSTRUCTION THAT IS
BUILT FROM SET LABELED
"NOT FOR CONSTRUCTION"

ENGINEER'S SEAL APPLIES TO DESIGN OF STRUCTURAL COMPONENTS ONLY

TEACHING GREENHOUSE
FOR
UNIVERSITY OF KENTUCKY
1421 UNIVERSITY DRIVE LEXINGTON, KENTUCKY 40503

NO.	DATE	DESCRIPTION

RELEASE AND ISSUE:
Schematic Set 09/06/2024

REVIEWED BY: ----
DRAWN BY: BD/CBG

PROJECT No.: 2420004

TRUSS CROSS SECTION

GH-2.10

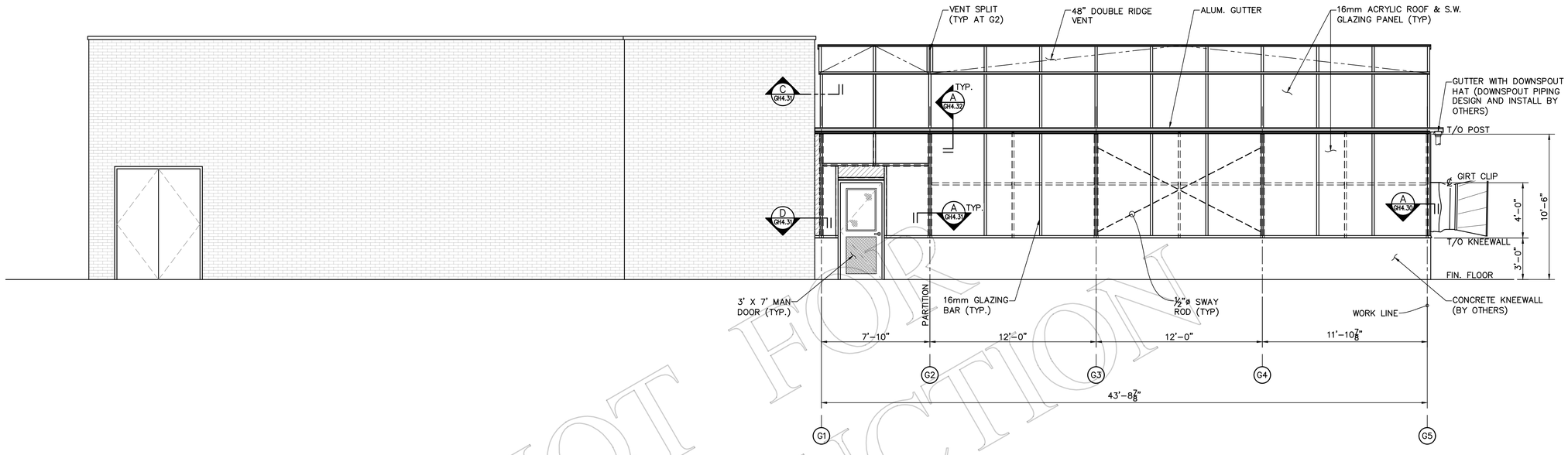

A TEACHING HOUSE SOUTH ELEVATION
SCALE: ¼"=1'-0"

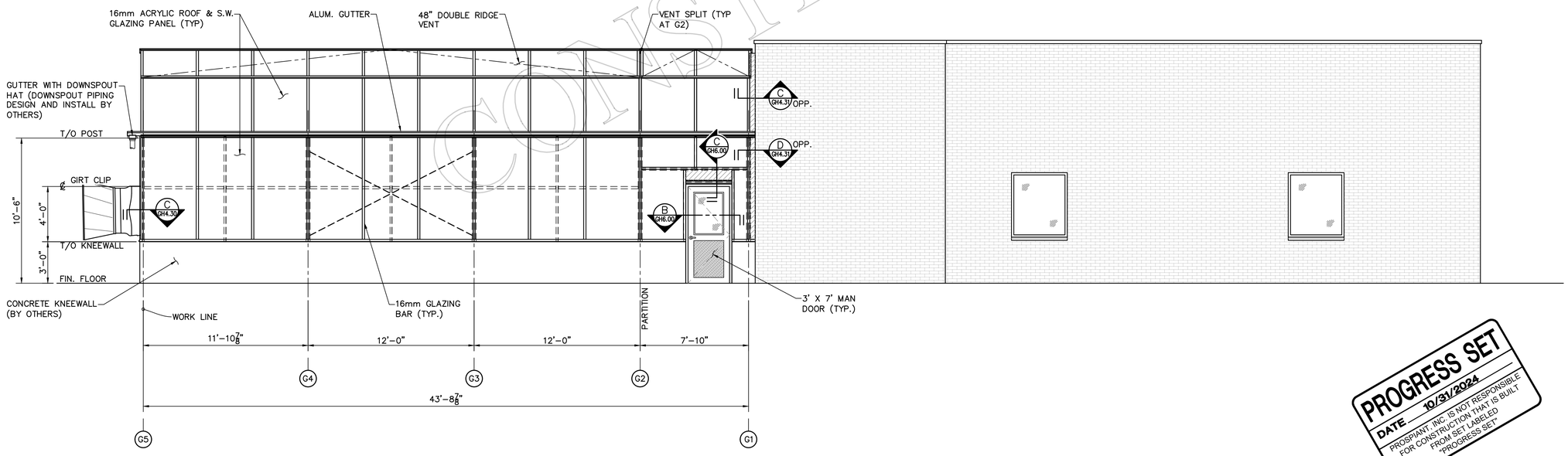

B TEACHING HOUSE NORTH ELEVATION
SCALE: ¼"=1'-0"

NOT FOR CONSTRUCTION

PROGRESS SET
DATE 10/31/2024
PROSPIANT, INC. IS NOT RESPONSIBLE FOR CONSTRUCTION THAT IS BUILT FROM SET LABELED "PROGRESS SET"

GREENHOUSE CONSULTANT:
PROSPIANT
5513 Vine Street - Cincinnati, OH 45217
(513) 242-0310 - www.Prospiant.com

THE DRAWINGS AND DATA IN THIS DOCUMENT, AND THE INTELLECTUAL PROPERTY AND CONFIDENTIAL INFORMATION IT CONTAINS ARE THE PROPERTY OF PROSPIANT, INC. - 5513 VINE STREET, CINCINNATI, OH 45217. ANY PARTY ACCEPTING THIS DOCUMENT DOES SO IN CONFIDENCE AND AGREES THAT IT SHALL NOT BE DUPLICATED, IN WHOLE OR IN PART, NOR DISCLOSED TO OTHERS WITHOUT THE WRITTEN CONSENT OF PROSPIANT, INC. © 2024

CONSULTING ENGINEER:
MOHAMED ALY, PE
1460 Betty Drive - Beavercreek, OH 45434
(513) 460-1977

NOT FOR CONSTRUCTION

PROSPIANT, INC.
IS NOT RESPONSIBLE FOR CONSTRUCTION THAT IS BUILT FROM SET LABELED "NOT FOR CONSTRUCTION"

ENGINEER'S SEAL APPLIES TO DESIGN OF STRUCTURAL COMPONENTS ONLY

TEACHING GREENHOUSE FOR UNIVERSITY OF KENTUCKY

1421 UNIVERSITY DRIVE LEXINGTON, KENTUCKY 40503

NO.	DATE	DESCRIPTION
1		
2		
3		
4		
5		
6		
7		

RELEASE AND ISSUE:
Schematic Set 09/06/2024

REVIEWED BY:	DRAWN BY:
----	BD/CBG

PROJECT No.: 2420004

SIDEWALL ELEVATIONS

GH-3.00

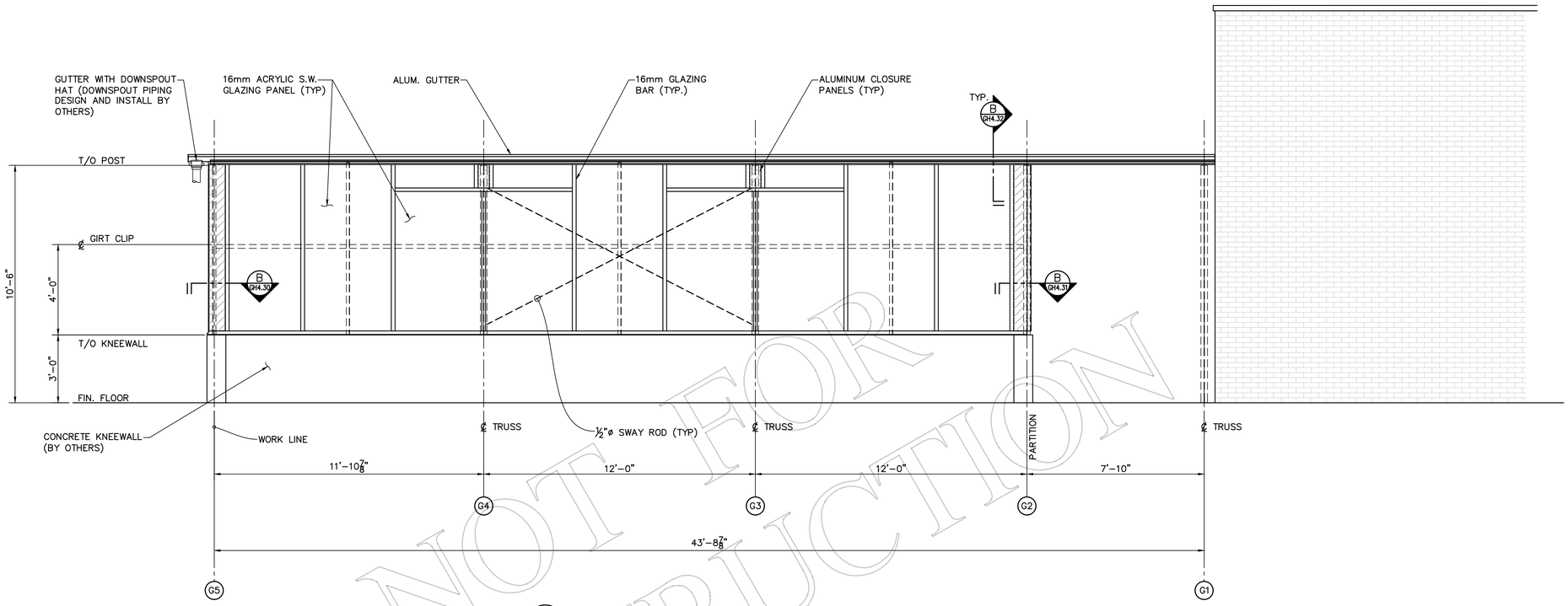

A TEACHING HOUSE SIDEWALL PARTITION ELEVATION
SCALE: 3/8"=1'-0"

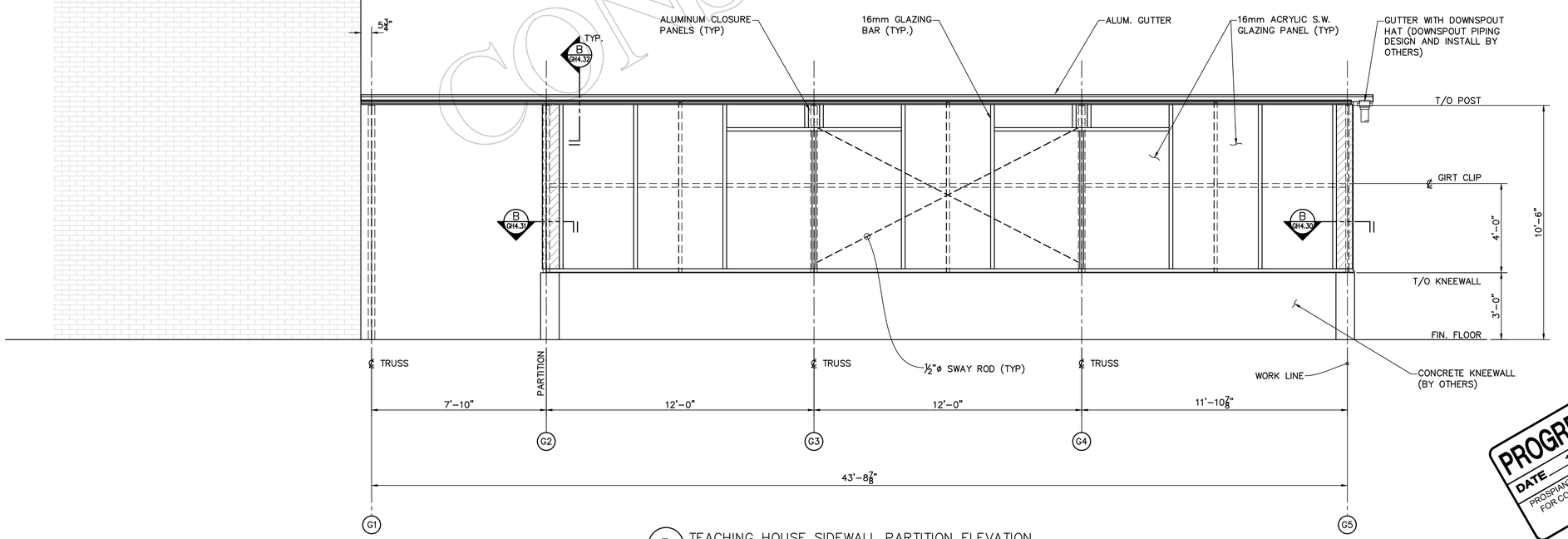

B TEACHING HOUSE SIDEWALL PARTITION ELEVATION
SCALE: 3/8"=1'-0"

PROGRESS SET
DATE 10/31/2024
PROSPIANT, INC. IS NOT RESPONSIBLE FOR CONSTRUCTION THAT IS BUILT FROM SET LABELED "PROGRESS SET"

NOT FOR CONSTRUCTION

GREENHOUSE CONSULTANT:
PROSPIANT

5513 Vine Street - Cincinnati, OH 45217
(513) 242-0310 - www.Prospiant.com

THE DRAWINGS AND DATA IN THIS DOCUMENT, AND THE INTELLECTUAL PROPERTY AND CONFIDENTIAL INFORMATION IT CONTAINS ARE THE PROPERTY OF PROSPIANT, INC. - 5513 VINE STREET, CINCINNATI, OH 45217. ANY PARTY ACCEPTING THIS DOCUMENT DOES SO IN CONFIDENCE AND AGREES THAT IT SHALL NOT BE DUPLICATED, IN WHOLE OR IN PART, NOR DISCLOSED TO OTHERS WITHOUT THE WRITTEN CONSENT OF PROSPIANT, INC. © 2024

CONSULTING ENGINEER:
MOHAMED ALY, PE
1460 Betty Drive - Beavercreek, OH 45434
(513) 460-1977

NOT FOR CONSTRUCTION

PROSPIANT, INC.
IS NOT RESPONSIBLE FOR CONSTRUCTION THAT IS BUILT FROM SET LABELED "NOT FOR CONSTRUCTION"

ENGINEER'S SEAL APPLIES TO DESIGN OF STRUCTURAL COMPONENTS ONLY

TEACHING GREENHOUSE
FOR
UNIVERSITY OF KENTUCKY

1421 UNIVERSITY DRIVE LEXINGTON, KENTUCKY 40503

NO.	DATE	DESCRIPTION

RELEASE AND ISSUE:
Schematic Set 09/06/2024

REVIEWED BY: ----
DRAWN BY: BD/CBG

PROJECT No.: 2420004

SIDEWALL PARTITION ELEVATIONS

GH-3.01

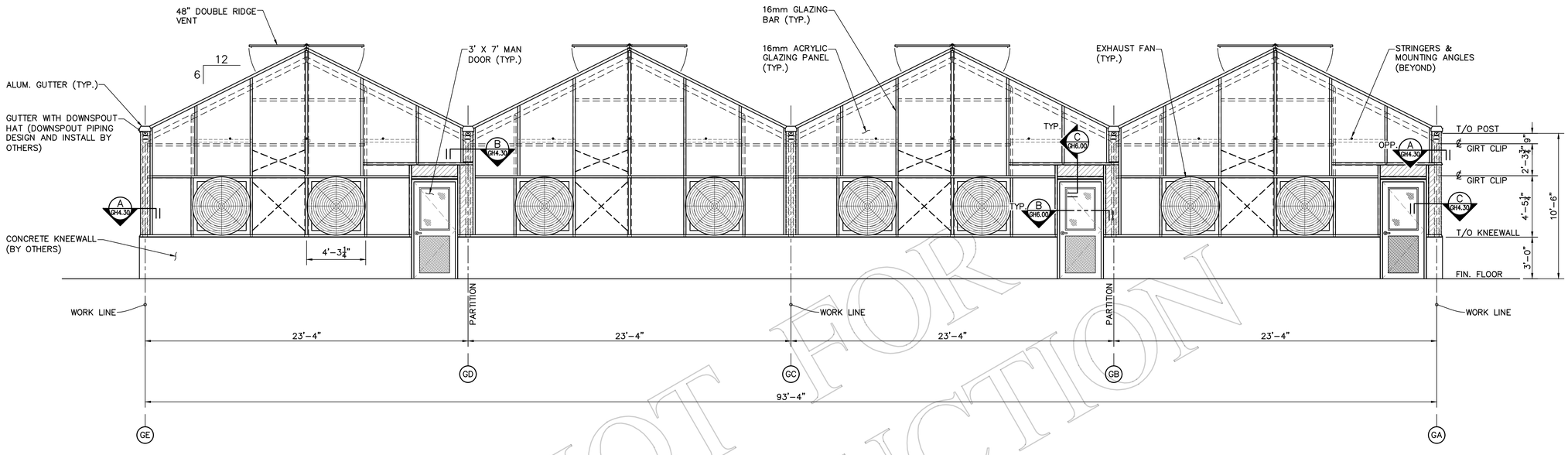

A TEACHING HOUSE EAST ELEVATION
SCALE: 1/4"=1'-0"

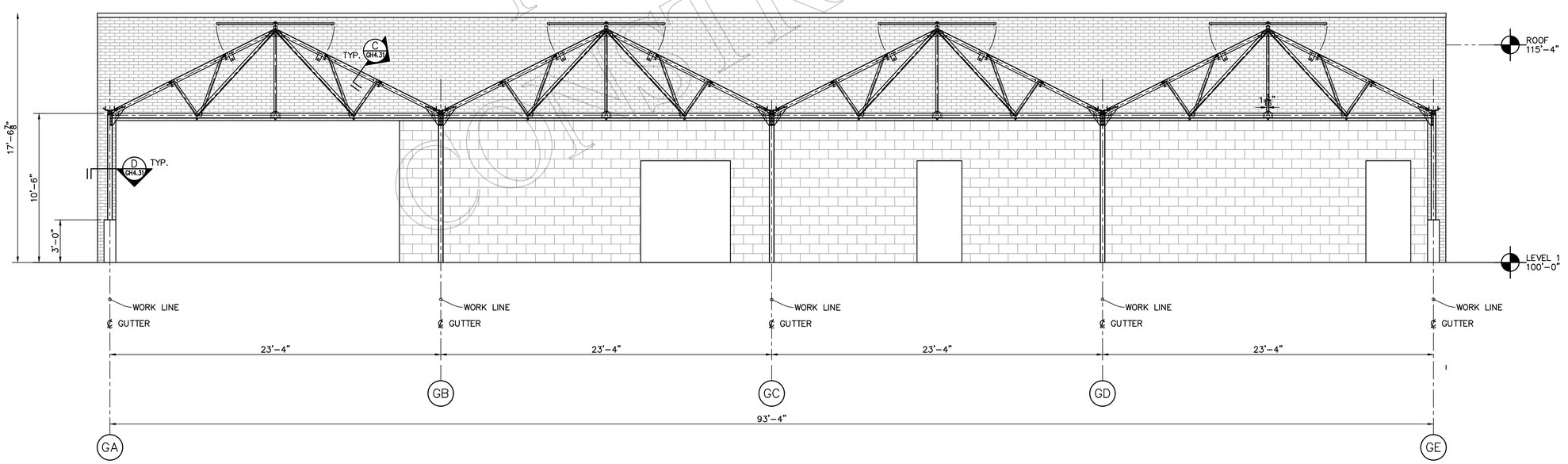

B TEACHING HOUSE PARITION ELEVATION AT HEADHOUSE
SCALE: 1/4"=1'-0"

NOT FOR CONSTRUCTION

PROGRESS SET
DATE 10/31/2024
PROSPIANT, INC. IS NOT RESPONSIBLE FOR CONSTRUCTION THAT IS BUILT FROM SET LABELED "PROGRESS SET"

GREENHOUSE CONSULTANT:
PROSPIANT
5513 Vine Street - Cincinnati, OH 45217
(513) 242-0310 - www.Prospiant.com

THE DRAWINGS AND DATA IN THIS DOCUMENT, AND THE INTELLECTUAL PROPERTY AND CONFIDENTIAL INFORMATION IT CONTAINS ARE THE PROPERTY OF PROSPIANT, INC. - 5513 VINE STREET, CINCINNATI, OH 45217. ANY PARTY ACCEPTING THIS DOCUMENT DOES SO IN CONFIDENCE AND AGREES THAT IT SHALL NOT BE DUPLICATED IN WHOLE OR IN PART, NOR DISCLOSED TO OTHERS WITHOUT THE WRITTEN CONSENT OF PROSPIANT, INC. © 2024

CONSULTING ENGINEER:
MOHAMED ALY, PE
1460 Betty Drive - Beavercreek, OH 45434
(513) 460-1977

NOT FOR CONSTRUCTION

PROSPIANT, INC.
IS NOT RESPONSIBLE FOR CONSTRUCTION THAT IS BUILT FROM SET LABELED "NOT FOR CONSTRUCTION"

ENGINEER'S SEAL APPLIES TO DESIGN OF STRUCTURAL COMPONENTS ONLY

TEACHING GREENHOUSE FOR UNIVERSITY OF KENTUCKY

1421 UNIVERSITY DRIVE LEXINGTON, KENTUCKY 40503

NO.	DATE	DESCRIPTION

RELEASE AND ISSUE:
Schematic Set 09/06/2024

REVIEWED BY: ----
DRAWN BY: BD/CBG

PROJECT No.: 2420004

GABLE ELEVATIONS

GH-3.10

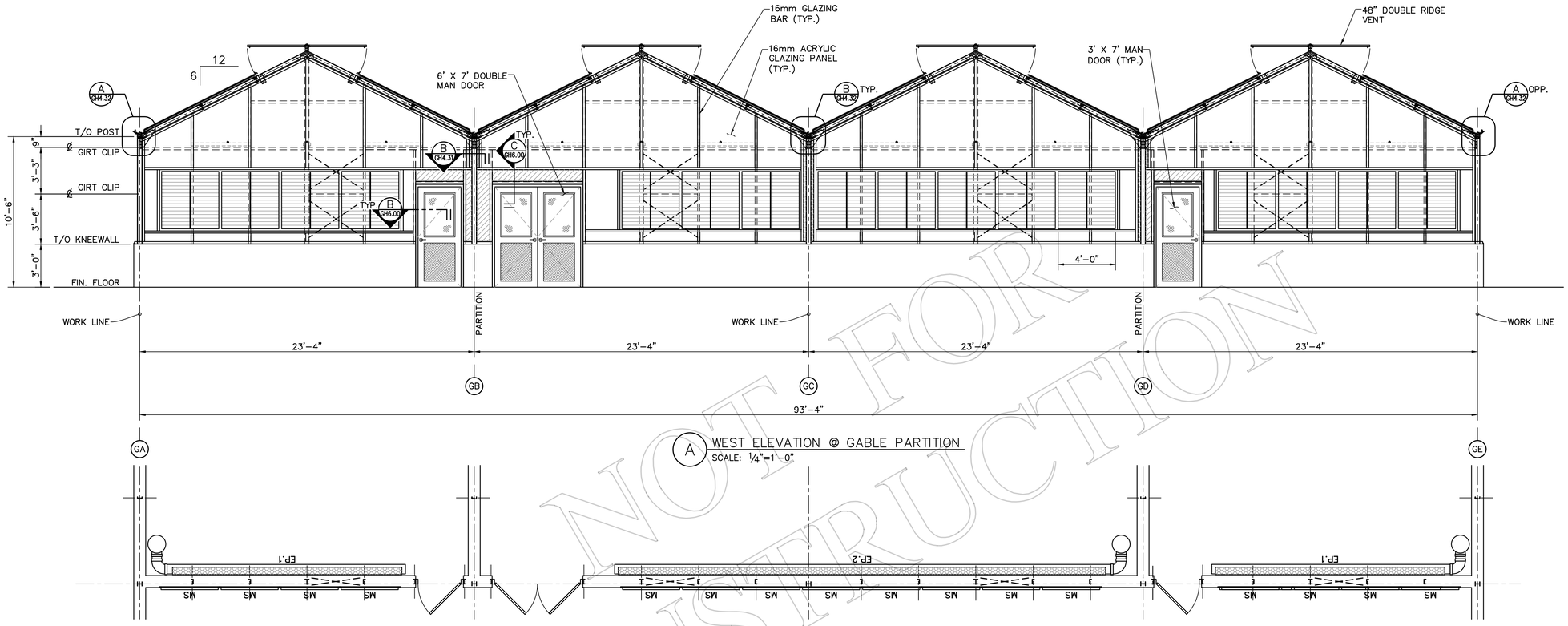

A WEST ELEVATION @ GABLE PARTITION
SCALE: 1/4"=1'-0"

NOT FOR CONSTRUCTION

PROGRESS SET
DATE 10/31/2024
PROSPIANT, INC. IS NOT RESPONSIBLE FOR CONSTRUCTION THAT IS BUILT FROM SET LABELED "PROGRESS SET"

GIRT SCHEDULE	
ID	LENGTH
A	–"
B	–"
C	–"

SWAY ROD SCHEDULE	
ID	LENGTH
1	148"
2	143"
3	146"

GREENHOUSE CONSULTANT:
PROSPIANT
5513 Vine Street - Cincinnati, OH 45217
(513) 242-0310 - - www.Prospiant.com

THE DRAWINGS AND DATA IN THIS DOCUMENT, AND THE INTELLECTUAL PROPERTY AND CONFIDENTIAL INFORMATION IT CONTAINS ARE THE PROPERTY OF PROSPIANT, INC. - 5513 VINE STREET, CINCINNATI, OH 45227. ANY PARTY ACCEPTING THIS DOCUMENT DOES SO IN CONFIDENCE AND AGREES THAT IT SHALL NOT BE DUPLICATED IN WHOLE OR IN PART, NOR DISCLOSED TO OTHERS WITHOUT THE WRITTEN CONSENT OF PROSPIANT, INC. © 2024

CONSULTING ENGINEER:
MOHAMED ALY, PE
1460 Betty Drive - Beavercreek, OH 45434
(513) 460-1977

NOT FOR CONSTRUCTION

PROSPIANT, INC.
IS NOT RESPONSIBLE FOR CONSTRUCTION THAT IS BUILT FROM SET LABELED "NOT FOR CONSTRUCTION"

ENGINEER'S SEAL APPLIES TO DESIGN OF STRUCTURAL COMPONENTS ONLY

TEACHING GREENHOUSE FOR UNIVERSITY OF KENTUCKY

1421 UNIVERSITY DRIVE LEXINGTON, KENTUCKY 40503

NO.	DATE	DESCRIPTION

RELEASE AND ISSUE:
Schematic Set 09/06/2024

REVIEWED BY: ----
DRAWN BY: BD/CBG

PROJECT No.: 2420004

GABLE PARTITION ELEVATIONS

GH-3.11

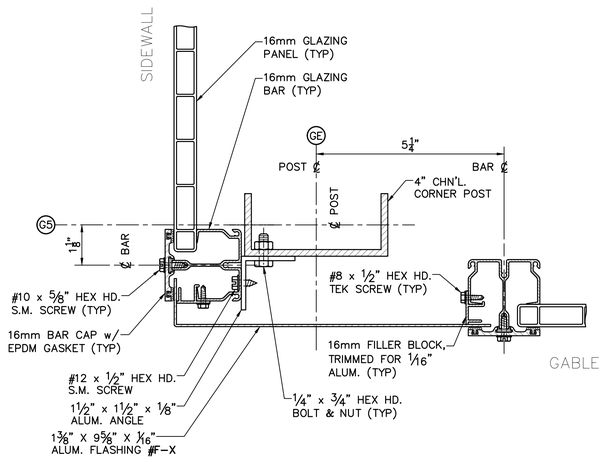

CORNER CLOSURE DETAIL (A)
AT GLAZING

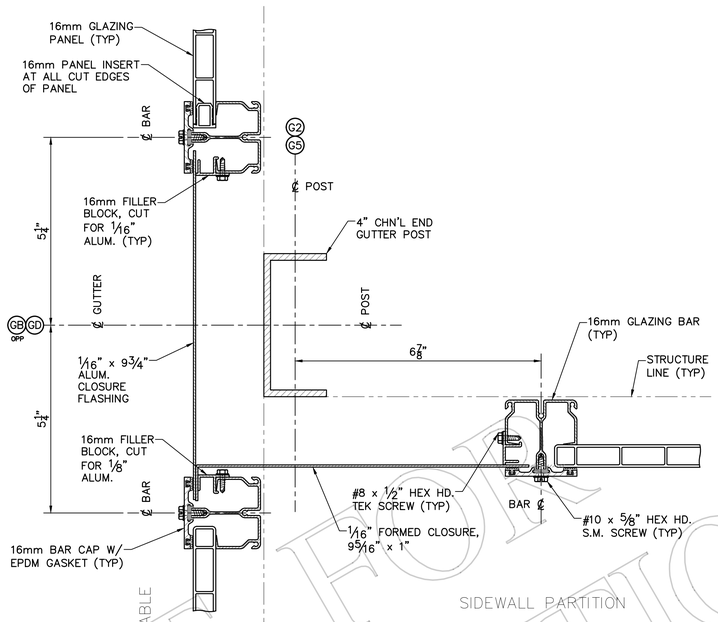

SIDEWALL PART. CLOSURE DETAIL (B)
AT GLAZING

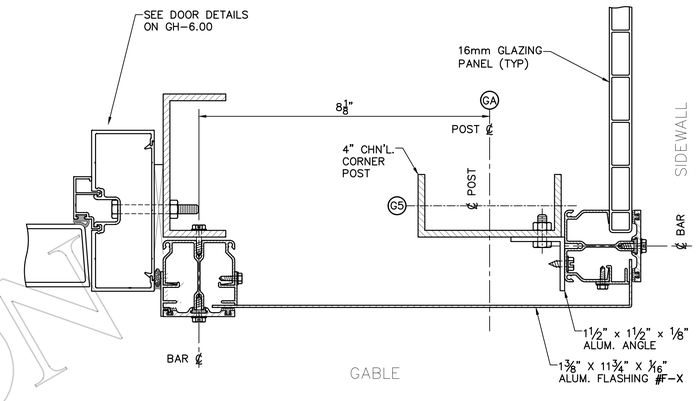

SIDEWALL CLOSURE DETAIL (C)
AT GLAZING

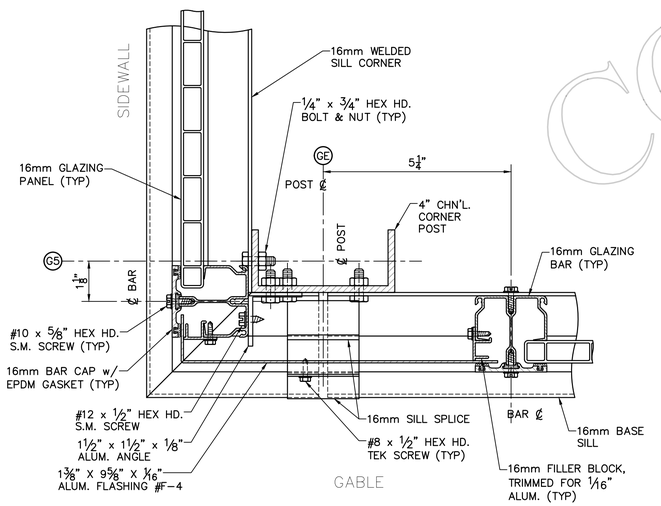

CORNER CLOSURE DETAIL (A.1)
AT SILL

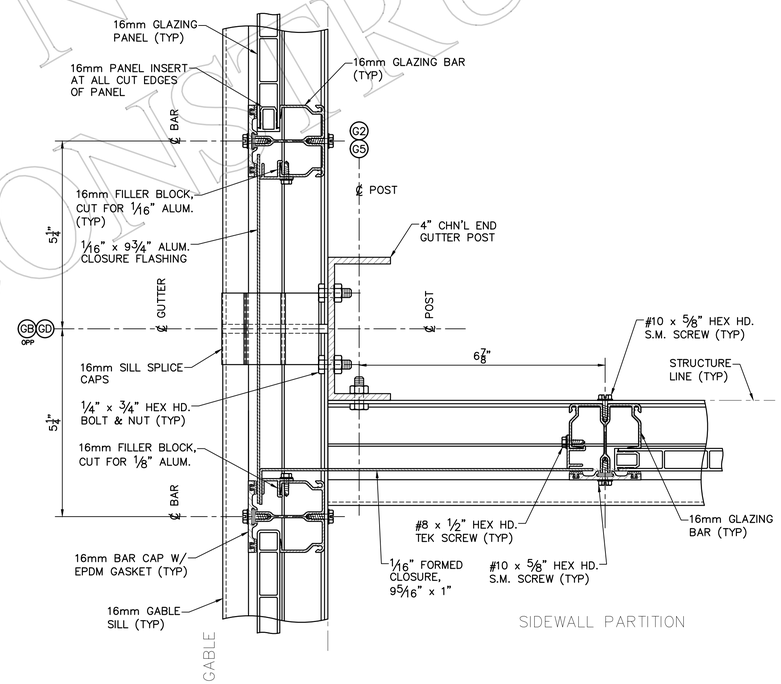

SIDEWALL PART. CLOSURE DETAIL (B.1)
AT SILL

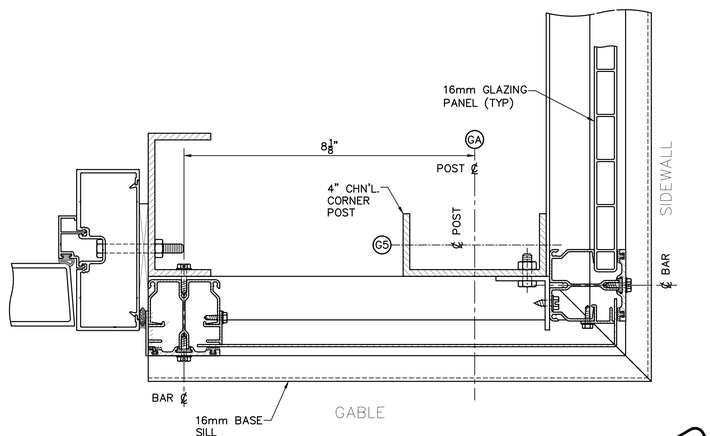

SIDEWALL CLOSURE DETAIL (C.1)
AT SILL

NOT FOR CONSTRUCTION
PROGRESS SET
DATE 10/31/2024
PROSPIANT, INC. IS NOT RESPONSIBLE FOR CONSTRUCTION THAT IS BUILT FROM SET LABELED "PROGRESS SET"

GREENHOUSE CONSULTANT:
PROSPIANT
5513 Vine Street - Cincinnati, OH 45217
(513) 242-0310 - www.Prospiant.com

THE DRAWINGS AND DATA IN THIS DOCUMENT, ARE THE INTELLECTUAL PROPERTY AND CONFIDENTIAL INFORMATION IT CONTAINS ARE THE PROPERTY OF PROSPIANT, INC. - 5513 VINE STREET, CINCINNATI, OH 45217. ANY PARTY ACCEPTING THIS DOCUMENT DOES SO IN CONFIDENCE AND AGREES THAT IT SHALL NOT BE DUPLICATED, IN WHOLE OR IN PART, NOR DISCLOSED TO OTHERS WITHOUT THE WRITTEN CONSENT OF PROSPIANT, INC. © 2024

CONSULTING ENGINEER:
ROBERT MEDLOCK, P.E.
7403 Bolby Ridge Blvd, Sachse, TX 75048
(903) 850-1977

NOT FOR CONSTRUCTION

PROSPIANT, INC.
IS NOT RESPONSIBLE FOR CONSTRUCTION THAT IS BUILT FROM SET LABELED "NOT FOR CONSTRUCTION"

ENGINEER'S SEAL APPLIES TO DESIGN OF STRUCTURAL COMPONENTS ONLY

TEACHING GREENHOUSE FOR UNIVERSITY OF KENTUCKY

1421 UNIVERSITY DRIVE LEXINGTON, KENTUCKY 40503

NO.	DATE	DESCRIPTION

RELEASE AND ISSUE:
Schematic Set 09/06/2024

REVIEWED BY: ---
DRAWN BY: BD/CBG

PROJECT No.: 2420004

CORNER & CLOSURE DETAILS

GH-4.30

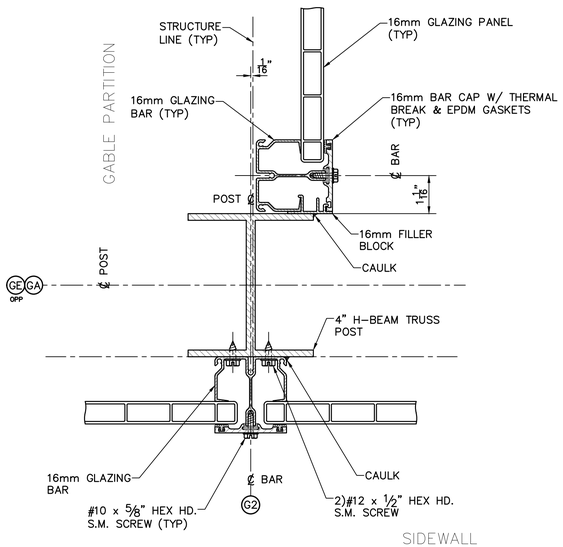

GABLE PART. CLOSURE DETAIL (A)

AT GLAZING

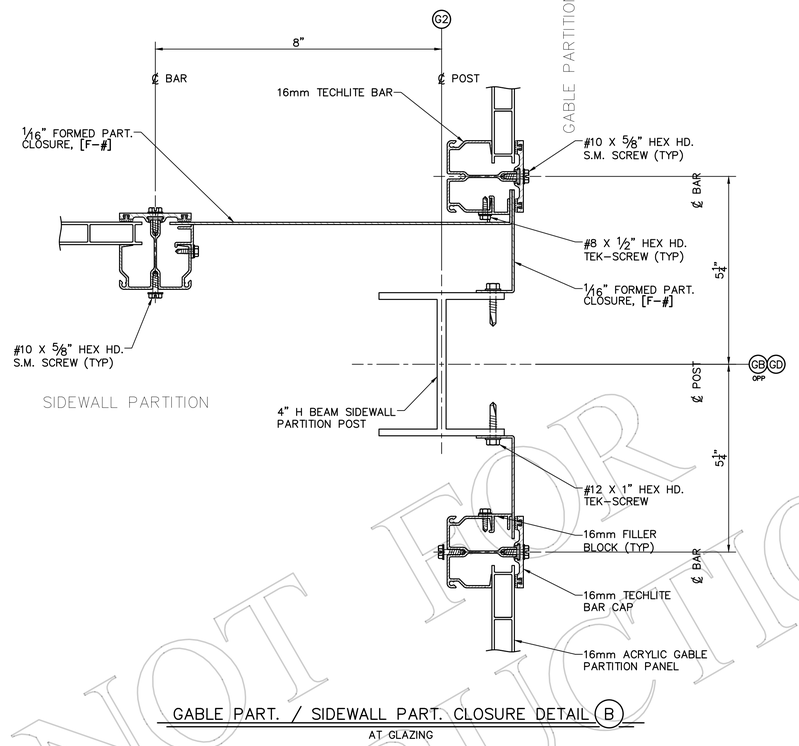

GABLE PART. / SIDEWALL PART. CLOSURE DETAIL (B)

AT GLAZING

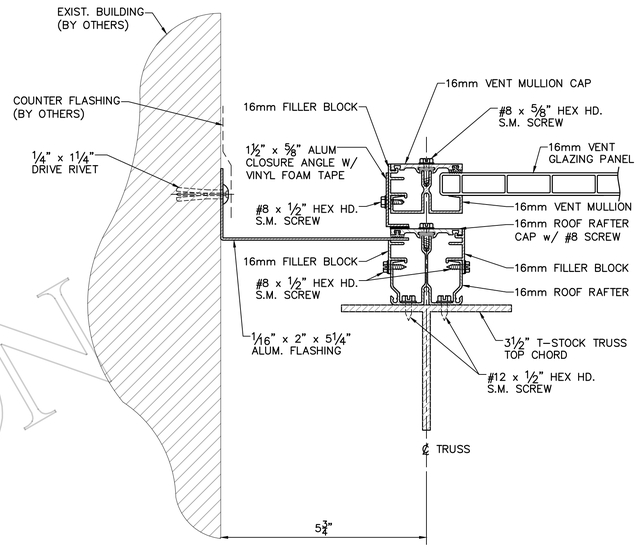

CLOSURE DETAIL AT GREENHOUSE ROOF (C)

AT EXISTING BUILDING

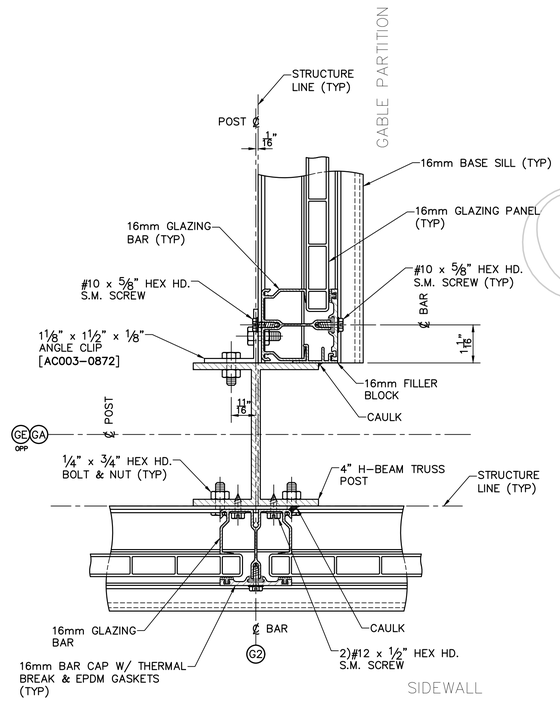

GABLE PART. CLOSURE DETAIL (A.1)

AT SILL

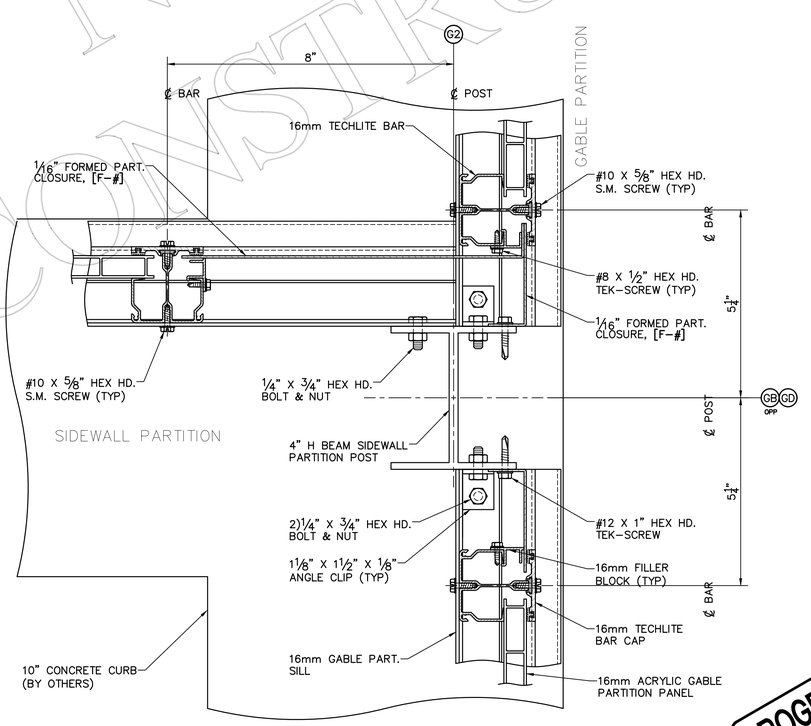

GABLE PART. / SIDEWALL PART. CLOSURE DETAIL (B.1)

AT SILL

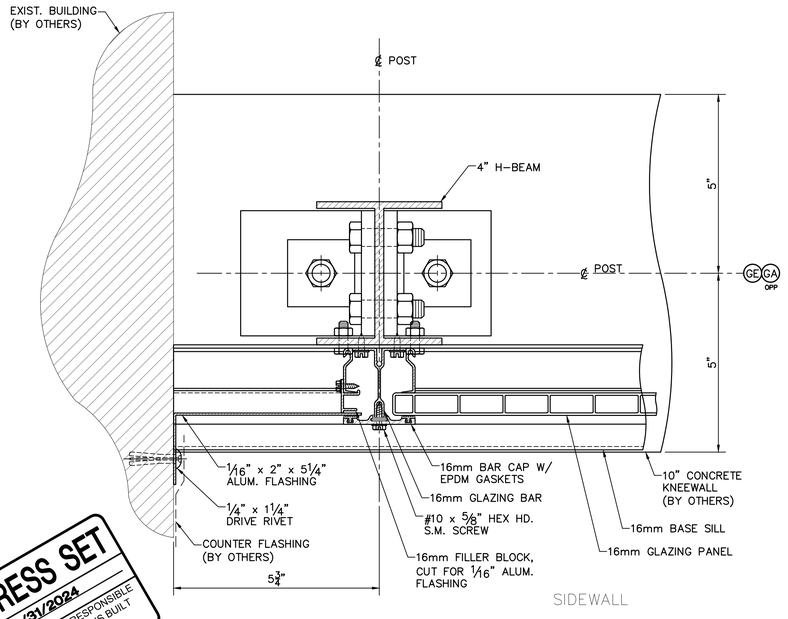

CLOSURE DETAIL (D)

AT CONNECTOR HEADHOUSE

PROGRESS SET
DATE 10/31/2024
PROSPIANT, INC. IS NOT RESPONSIBLE FOR CONSTRUCTION THAT IS BUILT FROM SET LABELED "PROGRESS SET"

NOT FOR CONSTRUCTION

GREENHOUSE CONSULTANT:
PROSPIANT
5513 Vine Street - Cincinnati, OH 45217
(513) 242-0310 - www.Prospiant.com

THE DRAWINGS AND DATA IN THIS DOCUMENT, AND THE INTELLECTUAL PROPERTY AND CONFIDENTIAL INFORMATION IT CONTAINS ARE THE PROPERTY OF PROSPIANT, INC. - 5513 VINE STREET, CINCINNATI, OH 45217. ANY PARTY ACCEPTING THIS DOCUMENT DOES SO IN CONFIDENCE AND AGREES THAT IT SHALL NOT BE DUPLICATED, IN WHOLE OR IN PART, NOR DISCLOSED TO OTHERS WITHOUT THE WRITTEN CONSENT OF PROSPIANT, INC. © 2024

CONSULTING ENGINEER:
ROBERT MEDANICH, P.E.
7423 Bella Oaks Lane Boerne, TX 78256
(253) 859-1977

NOT FOR CONSTRUCTION

PROSPIANT, INC.
IS NOT RESPONSIBLE FOR CONSTRUCTION THAT IS BUILT FROM SET LABELED "NOT FOR CONSTRUCTION"

ENGINEER'S SEAL APPLIES TO DESIGN OF STRUCTURAL COMPONENTS ONLY

TEACHING GREENHOUSE
FOR
UNIVERSITY OF KENTUCKY

1421 UNIVERSITY DRIVE LEXINGTON, KENTUCKY 40503

NO.	DATE	DESCRIPTION

RELEASE AND ISSUE:
Schematic Set 09/06/2024

REVIEWED BY: ----
DRAWN BY: BD/CBG

PROJECT No.: 2420004

CORNER & CLOSURE DETAILS

GH-4.31

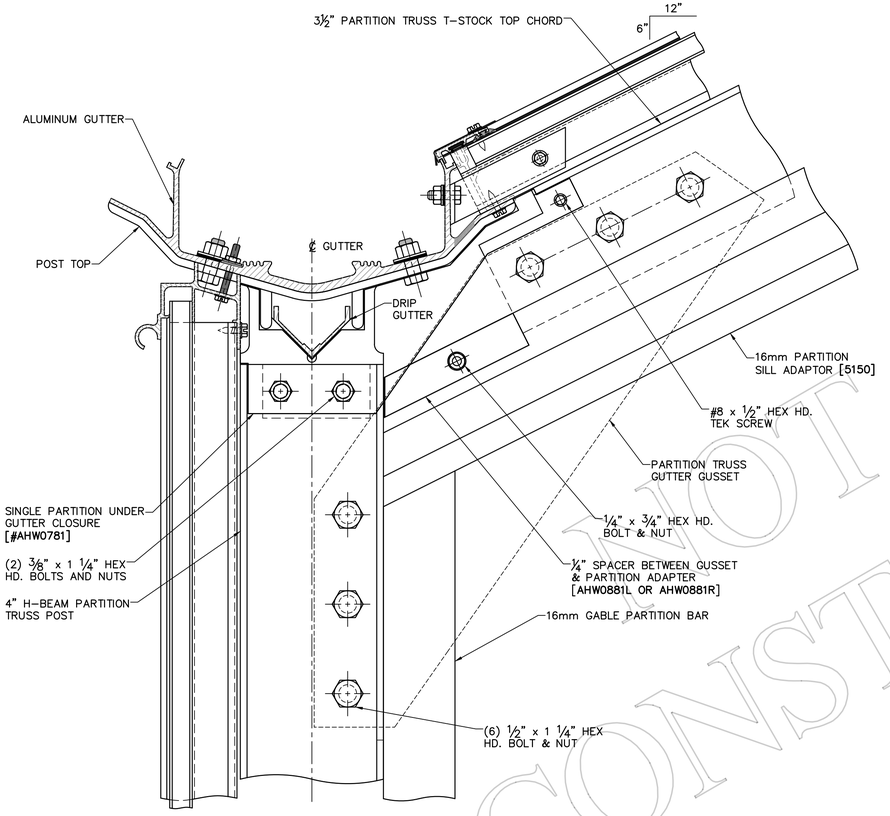

16mm SECTION @ GABLE PARTITION (A)
AT EXTERIOR GUTTER

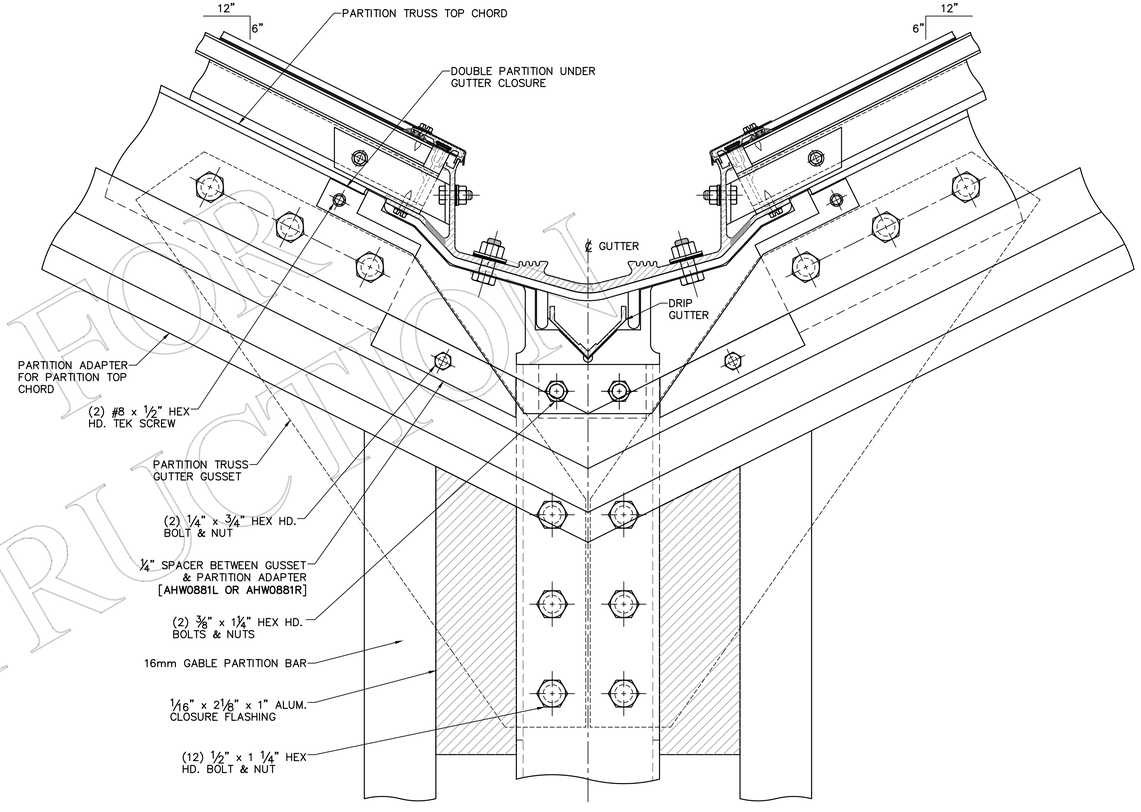

16mm SECTION @ GABLE PARTITION (B)
AT VALLEY GUTTER

NOT FOR CONSTRUCTION

PROGRESS SET
DATE 10/31/2024
PROSPIANT, INC. IS NOT RESPONSIBLE FOR CONSTRUCTION THAT IS BUILT FROM SET LABELED "PROGRESS SET"

GREENHOUSE CONSULTANT:
PROSPIANT
5513 Vine Street - Cincinnati, OH 45217
(513) 242-0310 - www.Prospiant.com

THE DRAWINGS AND DATA IN THIS DOCUMENT, AND THE INTELLECTUAL PROPERTY AND CONFIDENTIAL INFORMATION IT CONTAINS ARE THE PROPERTY OF PROSPIANT, INC. - 5513 VINE STREET, CINCINNATI, OH 45217. ANY PARTY ACCEPTING THIS DOCUMENT DOES SO IN CONFIDENCE AND AGREES THAT IT SHALL NOT BE DUPLICATED, IN WHOLE OR IN PART, NOR DISCLOSED TO OTHERS WITHOUT THE WRITTEN CONSENT OF PROSPIANT, INC. © 2024

CONSULTING ENGINEER:
ROBERT MEDANO, P.E.
7423 Bolty Ridge Drive Houston, TX 77436
(713) 450-1921

NOT FOR CONSTRUCTION

PROSPIANT, INC. IS NOT RESPONSIBLE FOR CONSTRUCTION THAT IS BUILT FROM SET LABELED "NOT FOR CONSTRUCTION"

ENGINEER'S SEAL APPLIES TO DESIGN OF STRUCTURAL COMPONENTS ONLY

TEACHING GREENHOUSE FOR UNIVERSITY OF KENTUCKY

1421 UNIVERSITY DRIVE LEXINGTON, KENTUCKY 40503

NO.	DATE	DESCRIPTION
1		
2		
3		
4		
5		
6		
7		

RELEASE AND ISSUE:
Schematic Set 09/06/2024

REVIEWED BY: ----
DRAWN BY: BD/CBG

PROJECT No.: 2420004

CORNER & CLOSURE DETAILS

GH-4.32

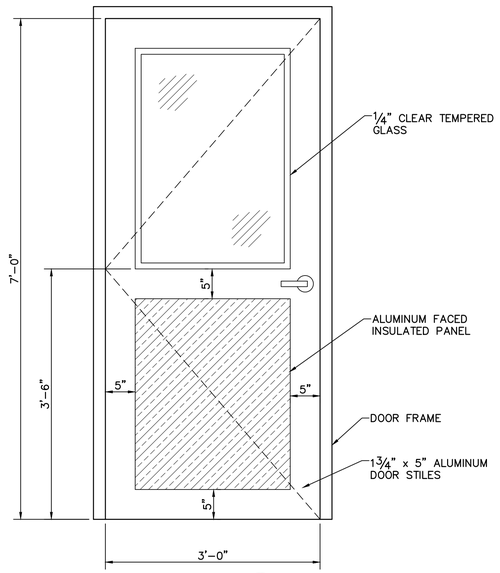

DOOR D-1 (A.1)
SCALE: 1" = 1'-0"

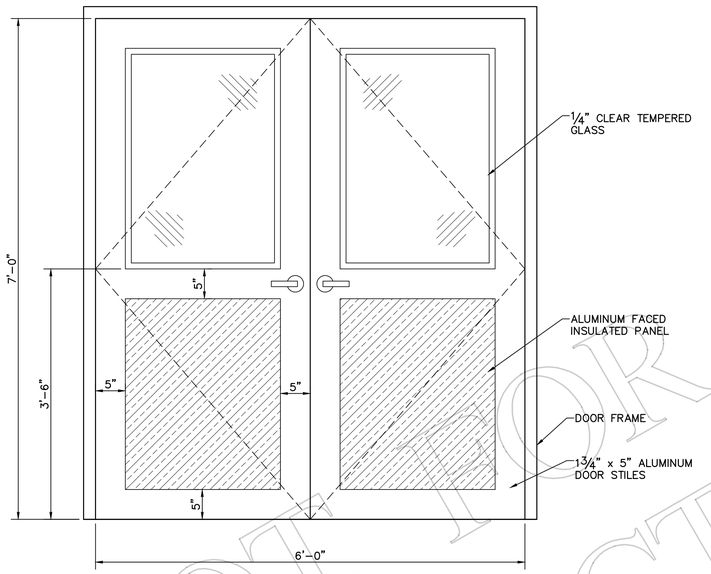

DOOR D-2 (A.2)
SCALE: 1"=1'-0"

DOOR SCHEDULE					
ID	QTY	ELEV.	HAND	DESCRIPTION	HARDWARE
D-1	7	A	(1)RH (1)RHR (4)LH (1)LHR	3'-0" X 7'-0" SERIES 500 ALUMINUM HALF PANEL PASSAGE DOOR w/ 1/4" CLEAR TEMPERED (OR 1" INSULTED TEMPERED) UPPER PANEL LITE AND 1" ALUMINUM INSULATED SMOOTH FINISH LOWER PANEL. DOOR FINISH TO BE CLEAR ANODIZED.	(4) STAINLESS STEEL BUTT HINGES (1) LCN 4040 XP x HW/PA x SRT x 4040XP-18PA w/DROP PLATE (1) BRUSH STYLE SWEEP, 18100CNB x BLACK x 42W (1) STANDARD PUSH/PULL HARDWARE (1) THUMB TURN LOCK WITH POSITION INDICATOR
D-2	1	B	DOUBLE (RHR LEAF ACTIVE)	6'-0" X 7'-0" SERIES 500 ALUMINUM HALF PANEL PASSAGE DOUBLE DOOR w/ 1" 4 CLEAR TEMPERED (OR 1" INSULTED TEMPERED) UPPER PANEL LITE AND 1" ALUMINUM INSULATED SMOOTH FINISH LOWER PANEL. DOOR FINISH TO BE CLEAR ANODIZED.	(8) STAINLESS STEEL BUTT HINGES (2) LCN 4040 XP x HW/PA x SRT x 4040XP-18PA w/DROP PLATE (2) NGP 220NA AUTOMATIC DOOR BOTTOM-SURFACE (2) SARGENT 28-65U15-KL-26D LEVER HANDLE (1) TOP & BOTTOM FLUSH BOLT @ INACTIVE LEAF

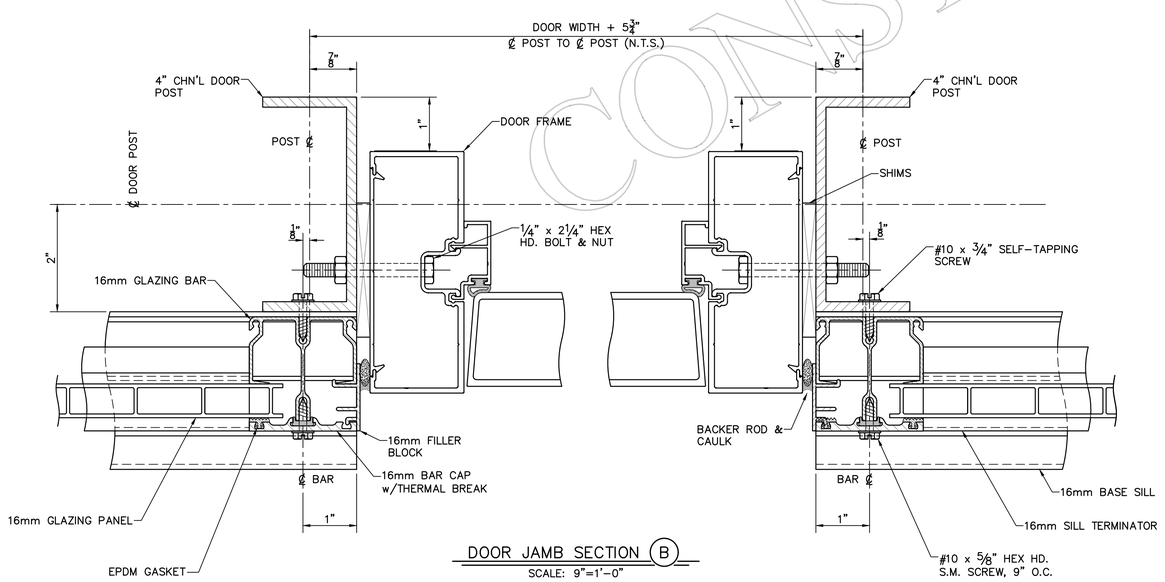

DOOR JAMB SECTION (B)
SCALE: 9"=1'-0"

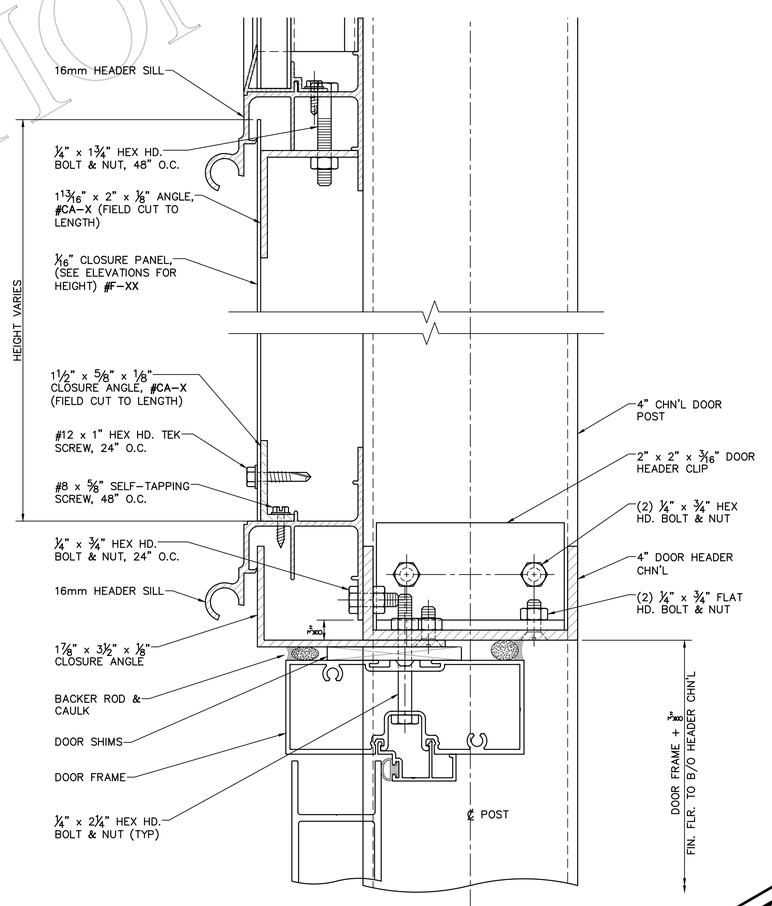

DOOR HEADER SECTION (C)
SCALE: 9"=1'-0"

NOT FOR CONSTRUCTION

PROGRESS SET
DATE 10/31/2024
PROSPIANT, INC. IS NOT RESPONSIBLE FOR CONSTRUCTION THAT IS BUILT FROM SET LABELED "PROGRESS SET"

GREENHOUSE CONSULTANT:
PROSPIANT
5513 Vine Street - Cincinnati, OH 45217
(513) 242-0310 - www.Prospiant.com

THE DRAWINGS AND DATA IN THIS DOCUMENT, AND THE INTELLECTUAL PROPERTY AND CONFIDENTIAL INFORMATION IT CONTAINS ARE THE PROPERTY OF PROSPIANT, INC. - 5513 VINE STREET, CINCINNATI, OH 45217. ANY PARTY ACCEPTING THIS DOCUMENT DOES SO IN CONFIDENCE AND AGREES THAT IT SHALL NOT BE DUPLICATED, IN WHOLE OR IN PART, NOR DISCLOSED TO OTHERS WITHOUT THE WRITTEN CONSENT OF PROSPIANT, INC. © 2024

CONSULTING ENGINEER:
ROBERT MEDARIS, P.E.
7423 Bolby Ridge Blvd, Houston, TX 77346
(281) 650-1977

NOT FOR CONSTRUCTION

PROSPIANT, INC.
IS NOT RESPONSIBLE FOR CONSTRUCTION THAT IS BUILT FROM SET LABELED "NOT FOR CONSTRUCTION"

ENGINEER'S SEAL APPLIES TO DESIGN OF STRUCTURAL COMPONENTS ONLY

TEACHING GREENHOUSE FOR UNIVERSITY OF KENTUCKY

1421 UNIVERSITY DRIVE LEXINGTON, KENTUCKY 40503

NO.	DATE	DESCRIPTION

RELEASE AND ISSUE:
Schematic Set 09/06/2024

REVIEWED BY: ----
DRAWN BY: BD/CBG

PROJECT No.: 2420004

DOOR SCHEDULE & DETAILS

GH-6.00

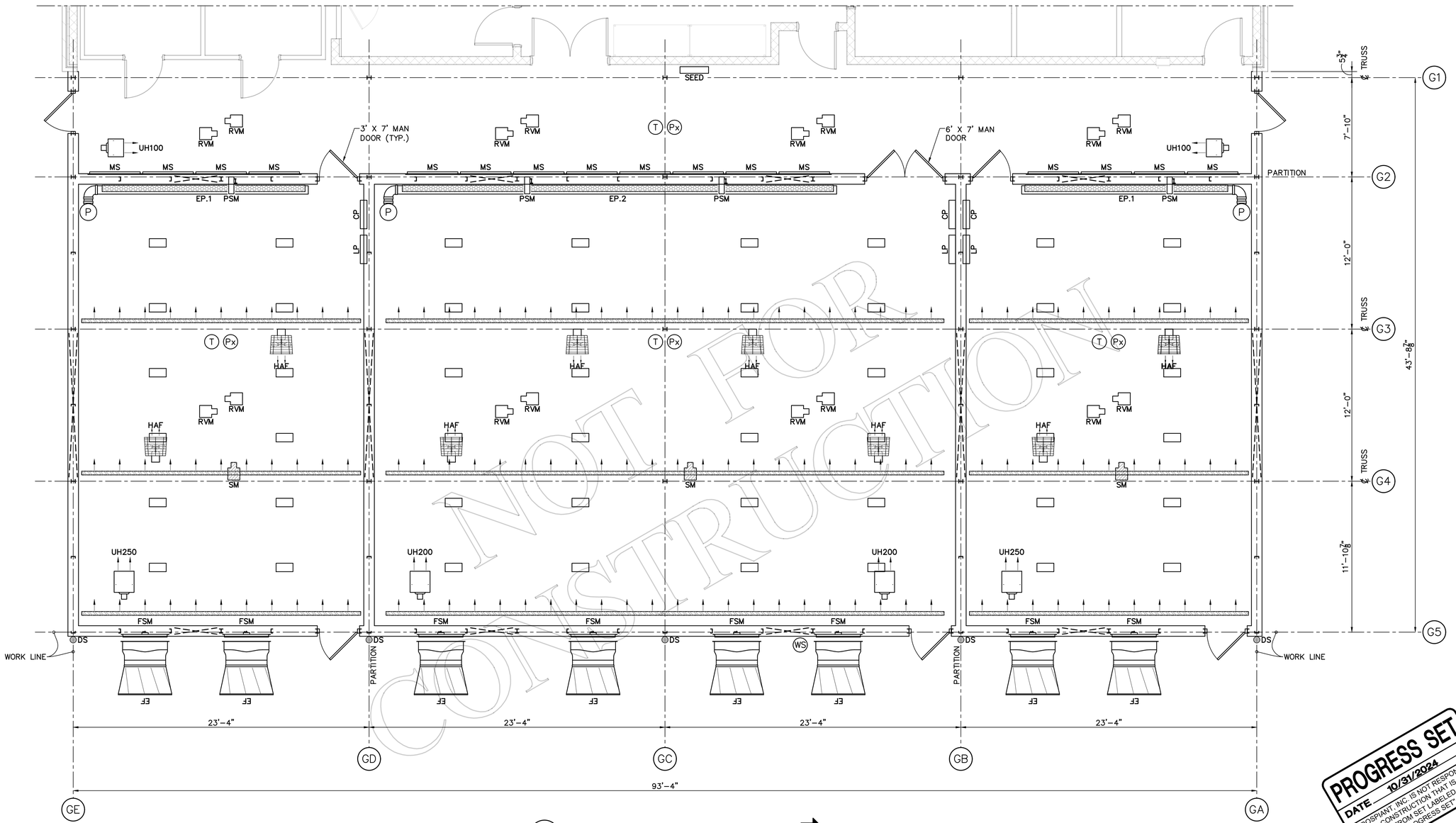

A TEACHING HOUSE EQUIPMENT PLAN
SCALE: 1/4"=1'-0"

N

NOT FOR CONSTRUCTION

PROGRESS SET
DATE 10/31/2024
PROSPIANT, INC. IS NOT RESPONSIBLE FOR CONSTRUCTION THAT IS BUILT FROM SET LABELED "PROGRESS SET"

EQUIPMENT SCHEDULE

SYMBOL	QTY.	DESCRIPTION	HP	VOLT	PH	AMP	RPM
RVM.#	16	ROOF VENT MOTOR, LOCK EWA50.1503, 150Nm, WITH OPEN/CLOSE LIMIT SWITCH	.5	120	1	3.6	3.2
SM.#	3	SHADE MOTOR, LOCK EWA50.1503, 150Nm, WITH OPEN/CLOSE LIMIT SWITCH	.5	120	1	3.6	3.2
HAF.#	8	PROSPIANT 12" HORIZONTAL AIRFLOW FAN. (MOUNT TO TRUSS BOTTOM CHORD, DO NOT MOUNT TO LIGHT SUPPORTS).	1/10	115	1	1.3	1725
EF.#	8	36" EXHAUST FAN, MUNTERS VX36-HE W/ FIBERGLASS HOUSING, DISCHARGE CONE **AND OSHA INLET & OUTLET GUARDS**	.5	460	3	1.3	796
	3	MOTORIZED SUSPENDED ROOF SHADE/HEAT RETENTION CURTAIN SYSTEM. FLAME RETARDANT SHADE FABRIC WITH XX% LIGHT REDUCTION FACTOR. 50% SHADE FACTOR	–	–	–	–	–
FSM	8	42" MOTORIZED SHUTTER, MUNTERS SW42 ALUMINUM SHUTTER	–	24	1	1.0	–
MS	16	60" MOTORIZED SHUTTER, MUNTERS SW60 ALUMINUM SHUTTER W/ (1) PAD SHUTTER MOTOR (PSM.#) FOR EVERY (4) SHUTTERS. (SEE BELOW FOR PSM.# DATA)	–	–	–	–	–

EQUIPMENT SCHEDULE

SYMBOL	QTY.	DESCRIPTION	HP	VOLT	PH	AMP	RPM
PSM.#	4	BELIMO AFBUP [180 IN-LB (20 Nm)] ACTUATOR	–	24	1	1.0	–
EP.1	2	MUNTERS "CT" EVAPORATIVE COOLING PAD SYSTEM, 6" THK. X 5'-0" H X 16'-0" LG. W/ 10" PVC SUMP TANK, PUMP (SEE BELOW) & PIPING, W/ MUNTERS CELDEK PADS, DISTRIBUTION PIPE, RETURN GUTTERS, AND END PANELS	–	–	–	–	–
EP.2	1	MUNTERS "CT" EVAPORATIVE COOLING PAD SYSTEM, 6" THK. X 5'-0" H X 34'-0" LG. W/ 10" PVC SUMP TANK, PUMP (SEE BELOW) & PIPING, W/ MUNTERS CELDEK PADS, DISTRIBUTION PIPE, RETURN GUTTERS, AND END PANELS	–	–	–	–	–
P	3	MUNTERS EC1319 (LITTLE GIANT 6EN-CIM), SUBMERSIBLE PUMP	1/3	115	1	6.0	–
UH250	2	ELECTRIC UNIT HEATER, MODINE HER250	1/15	480	3	–	1050
UH200	2	ELECTRIC UNIT HEATER, MODINE HER200	1/15	480	3	–	1050
UH100	2	ELECTRIC UNIT HEATER, MODINE HER100	1/15	480	3	–	1050

EQUIPMENT SCHEDULE

SYMBOL	QTY.	DESCRIPTION	HP	VOLT	PH	AMP	RPM
DS	5	6" ALUM. DOWNSPOUT PIPING (HEAT TRACE OF PIPING BY OTHERS)	–	–	–	–	–
SEED	1	ENVIRONMENTAL CONTROL SYSTEM, WADSWORTH SEED CONTROL PANEL	–	–	–	–	–
CP.#	3	WADSWORTH CONTACTOR PANEL	–	–	–	–	–
LP.#	3	WADSWORTH LIGHTING CONTROL PANEL	–	–	–	–	–
WS.#	1	WADSWORTH OUTDOOR WEATHER STATION, W/ MAST	–	24	–	–	–
T.#	1	WADSWORTH ASPIRATOR TEMPERATURE/HUMIDITY SENSOR (INSTALLED BY ELECTRICAL CONTRACTOR)	–	24	–	–	–
Px.#	1	WADSWORTH APOGEE SQ512 INDOOR LIGHT SENSOR W/ APOGEE AI-100 SENSOR LEVELING PLATE	–	24	–	–	–
	48	PHOTOBIO-CX 2125 LED GROW LIGHT – 850W	–	120	–	–	–

GREENHOUSE CONSULTANT:
PROSPIANT
5513 Vine Street - Cincinnati, OH 45217
(513) 242-0310 - www.Prospiant.com

THE DRAWINGS AND DATA IN THIS DOCUMENT, AND THE INTELLECTUAL PROPERTY AND CONFIDENTIAL INFORMATION IT CONTAINS ARE THE PROPERTY OF PROSPIANT, INC. - 5513 VINE STREET, CINCINNATI, OH 45227. ANY PARTY ACCEPTING THIS DOCUMENT DOES SO IN CONFIDENCE AND AGREES THAT IT SHALL NOT BE DUPLICATED IN WHOLE OR IN PART, NOR DISCLOSED TO OTHERS WITHOUT THE WRITTEN CONSENT OF PROSPIANT, INC. © 2024

CONSULTING ENGINEER:
MOHAMED ALY, PE
1460 Betty Drive - Beavercreek, OH 45434
(513) 460-1977

NOT FOR CONSTRUCTION

PROSPIANT, INC. IS NOT RESPONSIBLE FOR CONSTRUCTION THAT IS BUILT FROM SET LABELED "NOT FOR CONSTRUCTION"

ENGINEER'S SEAL APPLIES TO DESIGN OF STRUCTURAL COMPONENTS ONLY

TEACHING GREENHOUSE FOR UNIVERSITY OF KENTUCKY

1421 UNIVERSITY DRIVE LEXINGTON, KENTUCKY 40503

NO.	DATE	DESCRIPTION

RELEASE AND ISSUE:
Schematic Set 09/06/2024

REVIEWED BY: ----
DRAWN BY: BD/CBG

PROJECT No.: 2420004

EQUIPMENT PLAN

GE-1.00

University of Kentucky

UK Agricultural Research Facility 1

CCK-2617.0-10-25 – BP-05 Teaching Greenhouse

November 12, 2024

Pre-Proposal Conference

CCK-2617.0-10-25

TC-026 – General Trades
TC-027 – Mechanical/Plumbing
TC-028 – Electrical/Communications
TC-029 – Fire Protection

Turner

University of Kentucky

UK Agricultural Research Facility 1

CCK-2617.0-10-25 – BP-05 Teaching Greenhouse

Agenda

1. **Introduction of Project Team**
2. **Review of Procurement Process**
   - *Joe Wietmarschen, Turner Construction*
   - *Corey Leslie / Ken Scott, UK Purchasing*
3. **Review of Project Scope, Schedule and Site Logistics**
   - *Joe Wietmarschen, Turner Construction*
4. **Review Project Safety Requirements**
   - *Joe Wietmarschen, Turner Construction*
5. **Review Proposal Format and Content**
   - *UK Purchasing and Turner Construction*
6. **Questions**

Turner

University of Kentucky

UK Agricultural Research Facility 1

CCK-2617.0-10-25 – BP-05 Teaching Greenhouse

1

Introduction of Project Team

Joe Wietmarschen, Turner Construction

Turner

University of Kentucky

UK Agricultural Research Facility 1

CCK-2617.0-10-25 – BP-05 Teaching Greenhouse

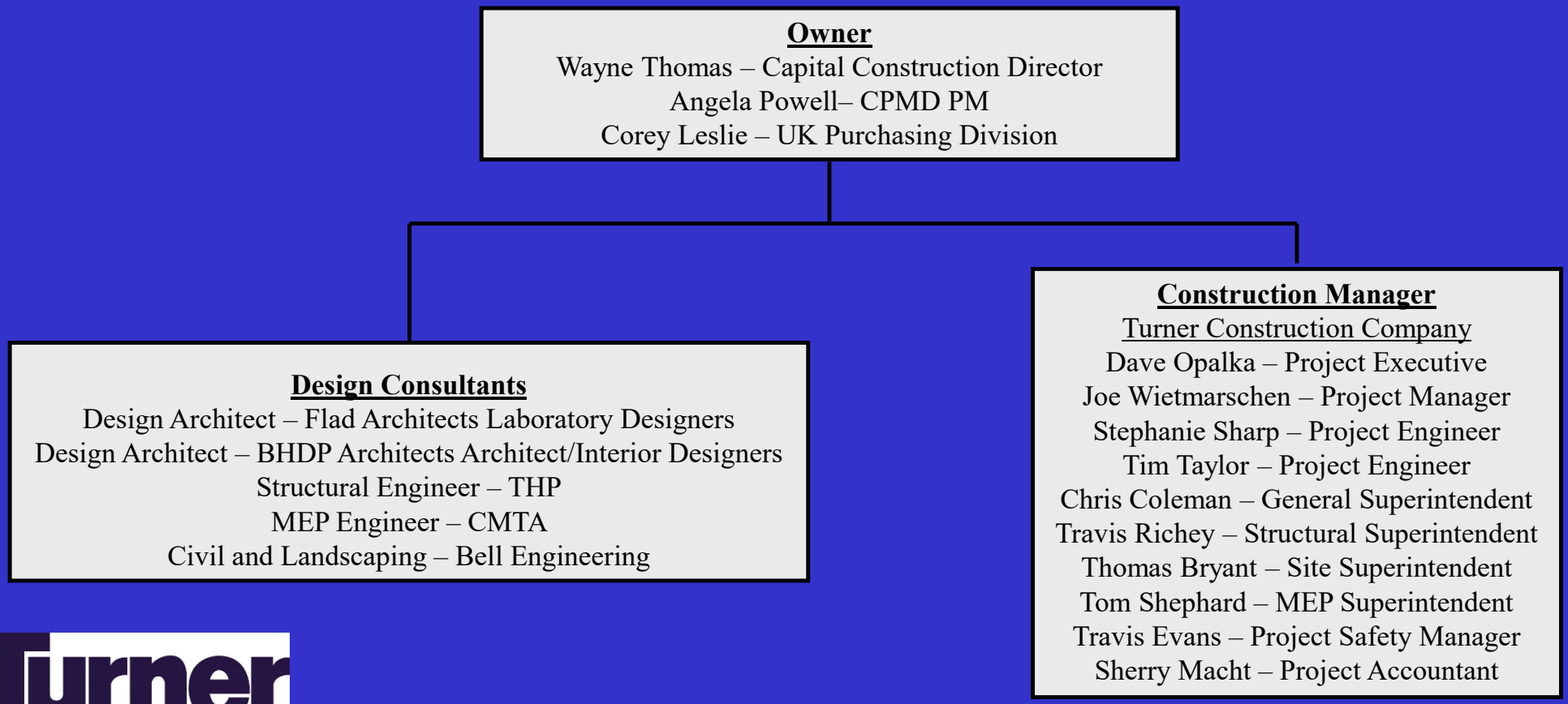

Turner

University of Kentucky

UK Agricultural Research Facility 1

CCK-2617.0-10-25 – BP-05 Teaching Greenhouse

2

Review of Procurement Process

Corey Leslie, UK Purchasing

Joe Wietmarschen, Turner Construction

Turner

University of Kentucky

UK Agricultural Research Facility 1

CCK-2617.0-10-25 – BP-05 Teaching Greenhouse

- **Bid Submission**
  - *Tuesday, December 3rd, 3:00 PM (Lexington Time)*
  - *Peterson Building, Room 322 (Directly to UK Purchasing)*
    - *411 South Limestone, Lexington, KY 40506*
  - *Post-Bid Review: TBA*
- **Confirmation of Receipt of Bid Package Documents and Addenda**
- **Due Date for Submission of Written Questions**
  - *Monday, November 18th, at 1:00 pm (Lexington Time)*
  - *All questions must be submitted in writing and must be submitted to Corey Leslie at cckbidquestions@uky.edu*
    - *Please use bid number and title in the 'Subject' line of your e-mail*
- **Note: Offerors shall NOT submit their standard terms and conditions.**

Turner

University of Kentucky

UK Agricultural Research Facility 1

CCK-2617.0-10-25 – BP-05 Teaching Greenhouse

3

Review of Project Scope, Schedule & Site Logistics

Joe Wietmarschen, Turner Construction

Turner

University of Kentucky

UK Agricultural Research Facility 1

CCK-2617.0-10-25 – BP-05 Teaching Greenhouse

Project Overview

- **This package includes the Construction Phase Teaching Greenhouse which includes General Trades, Mechanical/Plumbing, Electric/Communications, and Fire Protection.**
  - *Project is a new build located on Farm Road directly in front of the UK Football Stadium.*
  - *Project is adjacent to the UK Plant Sciences, Tabacco Research, Good Barn and Barnhart Buildings*
  - *Project is a stand alone Teaching Greenhouse. It is a masonry structure with an attached Greenhouse building. Building is a single story structure, no basement.*
- **The work will be performed under contract with the Construction Manger, Turner Construction Company**

Turner

University of Kentucky

UK Agricultural Research Facility 1

CCK-2617.0-10-25 – BP-05 Teaching Greenhouse

Project Scope Key Items

3. GENERAL WORK REQUIREMENTS - Specific contractors have work items listed that need to be included in your bid cost.
   - All subcontractor pay applications will be per Textura-CPM – please review fees per General Work Requirements.
   - Electronic DCR, Safety Forms, and QA/QC will be utilized on this project for quality management thru Procore.
   - Each Trade contractor and their subs are required to have cellular iPads.
   - Off hour work may be required. Make sure to review ALL project information.
   - Contractor responsible for daily clean up of work area and transporting daily debris to project dumpster(s)
   - UK Project Management Software - eCommunications

Turner

University of Kentucky

UK Agricultural Research Facility 1

CCK-2617.0-10-25 – BP-05 Teaching Greenhouse

Project Scope Key Items

4. GENERAL ITEMS
   - Contractor Parking:
     - Single connex box can be accommodated for storage and office trailer onsite, provided by each trade partner.
     - No specific parking provisions for trade partners have been made. No trade partner parking will be permitted on the jobsite.
   - UBE Inclusion
     - University of Kentucky inclusion goal for UBE is 10%
     - Each Prime Contractor will be required to submit UBE % of contracted work awarded with each payment application.

Turner

University of Kentucky

UK Agricultural Research Facility 1

CCK-2617.0-10-25 – BP-05 Teaching Greenhouse

Project Scope Key Items

1. ATTACHMENT "B" – SCOPES OF WORK….
   - *TC-026 General Trades*
     - Construction Phase Services
       - Division 03 Concrete complete
       - Division 04 Masonry complete
       - Division 05 Metals complete
       - Division 06 wood, plastics, and composites complete
       - Division 07 Thermal and Moisture Control complete
       - Division 08 Openings complete
       - Division 09 Finishes complete
       - Division 10 Roof Specialties complete
       - Division 12 Window shades and simulated stone countertops
       - Division 31 and 32 – sitework, seed/straw, concrete paving/retaining walls, fencing

Turner

University of Kentucky

UK Agricultural Research Facility 1

CCK-2617.0-10-25 – BP-05 Teaching Greenhouse

Project Scope Key Items

1. ATTACHMENT "B" – SCOPES OF WORK….
   - *TC-027 – Mechanical/Plumbing*
     - Construction Phase Services
       - All Plumbing per P drawings
         - Plumbing, plumbing fixtures, equipment, etc.
         - Hookup of all laboratory casework plumbing fixtures
         - Hookup of all greenhouse equipment and fixtures
       - All HVAC per the M drawings
         - Include all ductwork, mechanical piping, condensate drains (incl. CER rooms), equipment
       - Site utilities including storm piping, domestic water, sanitary waste and vent, etc.
       - Controls system complete
       - BIM
       - Permits

Turner

University of Kentucky

UK Agricultural Research Facility 1

CCK-2617.0-10-25 – BP-05 Teaching Greenhouse

Project Scope Key Items

1. ATTACHMENT "B" – SCOPES OF WORK….
   - *TC-028 Electrical/Communications*
     - Construction Phase Services
       - Electrical System complete including underground
       - Communication System complete including underground
       - Fire Alarm (rough in only) – include coordination with Fire Alarm Contractor
       - AV System complete per documents
       - Security/Access Control systems
       - Lighting Control system complete
       - Lightning protection and grounding
       - Permits
       - BIM

Turner

University of Kentucky

UK Agricultural Research Facility 1

CCK-2617.0-10-25 – BP-05 Teaching Greenhouse

Project Scope Key Items

1. ATTACHMENT “B” – SCOPES OF WORK….
   - *TC-029 Fire Protection*
     - Construction Phase Services
       - Fire Protection rough in, piping, trim, finish
       - FDC and underground piping
       - FDC concrete pad and bollards
       - Backflow preventor
       - BIM
       - Permits

Turner

University of Kentucky

UK Agricultural Research Facility 1

CCK-2617.0-10-25 – BP-05 Teaching Greenhouse

Project Scope Key Items

6. ATTACHMENT “E” – ACCOUNTNG PROCEDURES
   - Textura will be used for pay applications
7. ATTACHMENT “F” – PERCENTAGE MARKUP
   - Contractors will receive 10% markup on change orders
8. ATTACHMENT “I” – LEAN SUBCONTRACT EXHIBIT
   - WWP will be submitted from each contractor on a weekly basis
   - Daily huddles and weekly subcontractor meetings will be held with onsite foreman.
9. ATTACHMENT “J” – ELECTRONIC AGREEMENT
   - A copy of the design model to aid the bidders to better understand the overall design of the building and façade.
   - This document must be signed and returned in order to gain access to this model.

Turner

University of Kentucky

UK Agricultural Research Facility 1

CCK-2617.0-10-25 – BP-05 Teaching Greenhouse

Project Schedule Key Items

12. ATTACHMENT "G" – BID SCHEDULE

- Refer to Attachment G for Project Milestone Schedule

- Bid Date 12/3/2024
- Teaching Greenhouse Sitework Start – May 2025
- Teaching Greenhouse Completion – December 2025

Turner

University of Kentucky

UK Agricultural Research Facility 1

CCK-2617.0-10-25 – BP-05 Teaching Greenhouse

Project Scope Key Items

9. ATTACHMENT "L" - CONTRACTOR CONTROLLED INSURANCE PROGRAM (CCIP)
   - ALL Contractors will be required to enroll in the CCIP.
   - Turner is responsible for ONSITE Coverage, Trade Contractors and Sub Tiers are responsible for Auto and OFFSITE Coverage
   - The CCIP Manual is considered a contractual document.
   - All TSIB forms in the CCIP manual are required to be submitted and approved by TSIB prior to starting work.
   - All Lower Tier Subcontractors will be required to enroll in the CCIP and complete TSIB forms as well. It will be the Prime Contractors responsibility to ensure that lower tier subs are enrolled and compliant prior to starting work on site.
   - Each Prime Contractor and Lower Tier Subcontractors are required to submit a Form-4 Payroll report to TSIB every month that you are enrolled on the project. This is not the same as the Certified Payroll Reports.

Turner

University of Kentucky

UK Agricultural Research Facility 1

CCK-2617.0-10-25 – BP-05 Teaching Greenhouse

Project Logistics Key Items

SK001 Site Logistics

- Material Deliveries will come off University Dr.
- Limits of site for Teaching Greenhouse work are within the curb limits of the pavement surrounding Teaching Greenhouse. (highlighted in Purple)

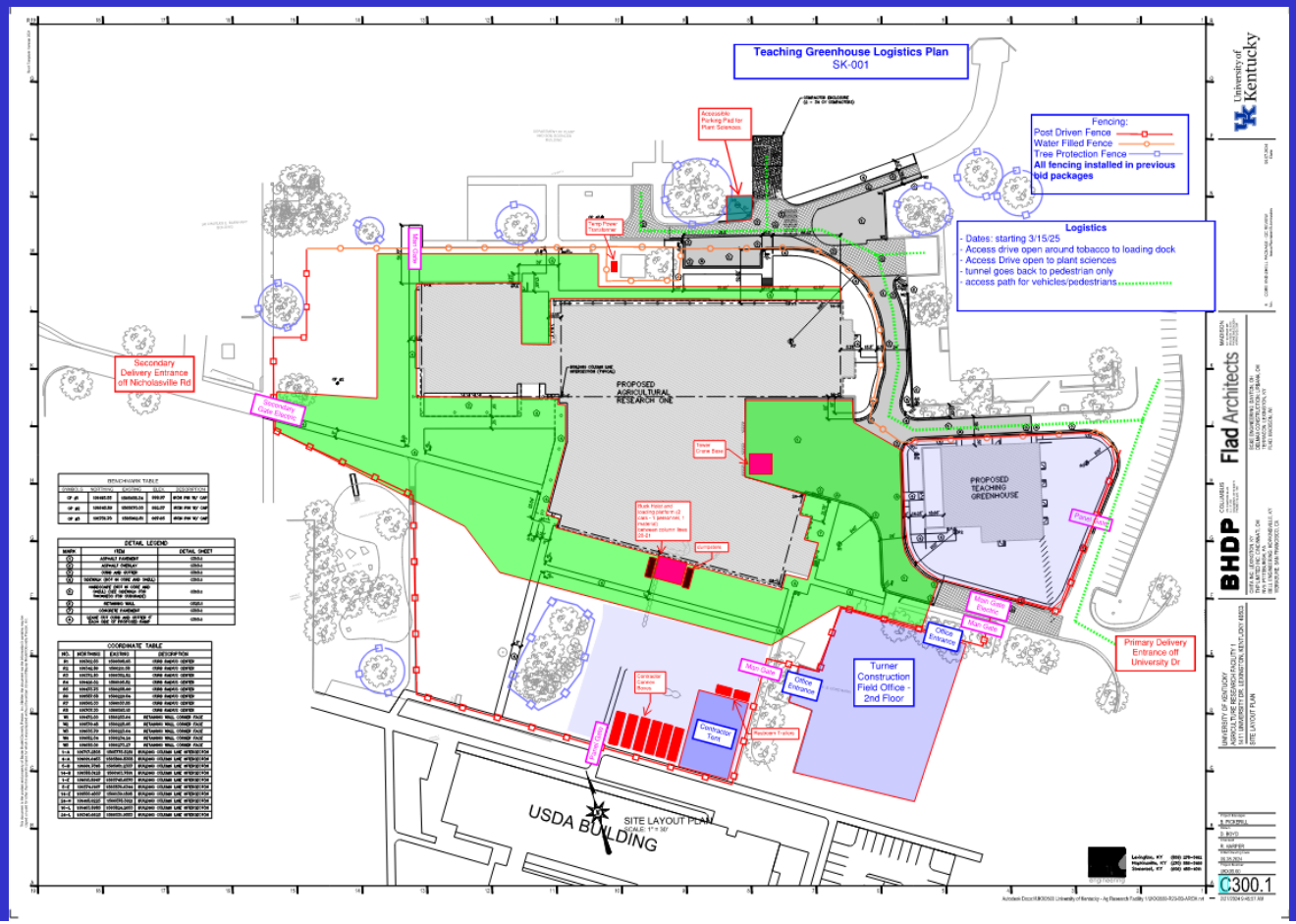

Turner

University of Kentucky

UK Agricultural Research Facility 1

CCK-2617.0-10-25 – BP-05 Teaching Greenhouse

4 Review Project Safety Requirements

Joe Wietmarschen, Turner Construction

Turner

University of Kentucky

UK Agricultural Research Facility 1

CCK-2617.0-10-25 – BP-05 Teaching Greenhouse

Project Safety Requirements

- Compliance with Turner Jobsite Safety Program – Attachment C
- Building L.I.F.E. principles will be fully integrated into all facets of the Project – READ THROUGH THIS. This is an updated program for 2024.
- Negative Drug Test required to start onsite – costs paid by TC's
- Hardhats, Safety Spoggle Glasses, High Vis, and Gloves are required 100%.
- OSHA 30 Hour for Supervisor/foreman (1 person onsite per contractor)
- Tobacco Free Campus & Jobsite
- Each contractor must have a competent person on site AT ALL TIMES to perform any work.
- Each contractor's foremen are required to attend Building L.I.F.E. training before beginning work.
- Any signaling shall be by a qualified signal person.
- Rigging must be done by qualified rigger and shall inspect rigging before each use.
- Perimeter cable must be 3/8" or larger and installed anywhere a leading edge/fall of 4' or greater can occur
- Full time safety manager required for contracts over $5 million

Turner

University of Kentucky

UK Agricultural Research Facility 1

CCK-2617.0-10-25 – BP-05 Teaching Greenhouse

Project Safety Requirements (cont.)

- All scissor and boom lifts to have shroud or guard over the joystick/controls. Scissor lifts to have “timeout” feature which disables the lift/lower and drive functions. Boom lifts to have anti-crush or secondary guard technology
- Nothing Hits the Ground – Practice good construction practices. We expect all materials able to be readily movable (pallets, dunnage, etc.) and that cutting is completed off the ground and in a manner where cleanup is part of the activity.
- 100% Fall protection when working 6’ and above – fall protection plan will be required. Contractor to supply the correct fall protection for the task.
- Each contractor will be required to preform a Pre-Task Plan after stretch and flex before starting work every day. These will be an in depth review with the workers to determine what work will be done for that day, what the hazards are associated with this work, and how to mitigate these hazards. The workers will initial out at the end of the day and the contractor will submit this digitally.
- 100% fall protection required when working in any lifts.

Turner

University of Kentucky

UK Agricultural Research Facility 1

CCK-2617.0-10-25 – BP-05 Teaching Greenhouse

5

Review Proposal Format & Content

Joe Wietmarschen, Turner Construction

Turner

University of Kentucky

UK Agricultural Research Facility 1

CCK-2617.0-10-25 – BP-05 Teaching Greenhouse

Proposal Format & Content

- Form of Proposal and Work Category Description
  - Bid must be signed
  - Addenda (if any) must be acknowledged
- Hourly Rates, UBE form, and materials list must be filled out
- Authentication of Bid
- Business Classification
- 5% Bid Bond
- Payment and Performance bonds are NOT to be included base bid price.

Turner

University of Kentucky

UK Agricultural Research Facility 1

CCK-2617.0-10-25 – BP-05 Teaching Greenhouse

Bid Form – Must fill out all blanks (including alternates)

FOR THE LUMP SUM OF_____
(USE WORDS)

_____ DOLLARS AND _____ CENTS.
(USE WORDS) (USE WORDS)

($_____) **BIDDER MUST TURN IN BID BREAKOUT SHEET WITH THIS FORM OF PROPOSAL**
(USE FIGURES)

Turner

University of Kentucky

UK Agricultural Research Facility 1

CCK-2617.0-10-25 – BP-05 Teaching Greenhouse

Bid Form – Bid Breakout

- This must be completed for bid to be accepted

	Description of Work	Labor Hours	Quantity	Unit	Unit Cost	Total
1	Engineering & Submittals				$	$
2	Layout, Permits & fees				$	$
3	Temp Lighting & Power				$	$
4	Electrical Power Underground and Duct Banks				$	$
5	Communications Underground and Duct Banks				$	$
6	Risers Electric Power				$	$
7	Risers Communication				$	$
8	1000 kVA Transformer				$	$
9	Testing and Inspection				$	$
10					$	$
11						
12						
	Please list and breakdown below any work that has not been listed above					
13					$	$
14					$	$
15					$	$
16					$	$
17					$	$
18	Management				$	$
19	Safety and Housekeeping				$	$
20	General Work Requirements				$	$
21	Overhead and Profit				$	$
Allowances (to be included in bid amount)						
1	Underground Utility Coordination				$	$30,000
2						
	TOTAL BID AMOUNT (This amount should match the Lump Sum listed on Form of Proposal)					**$**
	Cost of Payment & Performance Bond **(DO NOT INCLUDE THIS COST IN BID AMOUNT)**					$

Turner

University of Kentucky

UK Agricultural Research Facility 1

CCK-2617.0-10-25 – BP-05 Teaching Greenhouse

6

Questions

Joe Wietmarschen, Turner Construction

Turner

University of Kentucky

UK Agricultural Research Facility 1

CCK-2617.0-10-25 – BP-05 Teaching Greenhouse

Questions

All questions must be submitted in writing and must be submitted to Corey Leslie at *cckbidquestions@uky.edu*

Turner