University of Kentucky
Procurement Services

INVITATION FOR BIDS

CCK-2557.0-1-24
GOOD SAMARITAN HOSPITAL
EMERGENCY GENERATOR UPGRADE
ADDENDUM # 1
05/10/2024

IMPORTANT: BID AND ADDENDUM MUST BE RECEIVED BY 05-16-2024 @ 3:00 P.M. LEXINGTON, KY TIME

Bidder must acknowledge receipt of this and any addendum as stated in the Invitation for Bids.

ITEM #1: MODIFICATIONS AND CLARIFICATIONS TO THE PROJECT DOCUMENTS

Bidders are instructed to review and incorporate the enclosed addendum items into their offer.

OFFICIAL APPROVAL
UNIVERSITY OF KENTUCKY

Corey W. Leslie / (859) 257-9102

SIGNATURE

Typed or Printed Name

University of Kentucky
Procurement Services
322 Peterson Service Building
Lexington, KY 40506-0005

An Equal Opportunity University

ADDENDUM # 1

UNIVERSITY OF KENTUCKY
GOOD SAMARITAN HOSPITAL
EMERGENCY GENERATOR UPGRADE
LEXINGTON, KENTUCKY

INVITATION TO BID: CCK-2557.0-1-24

CMPD Project: 2557.0
CMTA Project: XKGU21

To: All Plan Holders

From: CMTA Engineering Consultants
2365 Harrodsburg Road, Suite B400
Lexington, Kentucky 40504

Date: May 10, 2024

The purpose of this Addendum is to further clarify the requirements of the Plans and Specifications. This Addendum does hereby become a part of the Contract Documents, and the Bidder shall be governed by the information in this Addendum as if included in the Plans and Specifications. Each bidder shall acknowledge receipt of this Addendum on the space provided on the Form of Proposal.

Item #1 Pre-Bid Meeting and Contractor Questions

A. Refer to the attached sign-in sheet for a list of attendees.
B. Refer to the attached sheet for pre-bid questions and answers.

Item #2 Refer to the Special Conditions

A. Revise Article 25.7 to read: "Due to concurrent construction on the site, space for a dumpster may not be available. The Contractor shall plan to haul off demolition debris on a daily basis. Dumpsters/trailers/trucks will be provided and maintained by the General Contractor."
B. Related to Article 28: Note that a concurrent site sidewalk and paving project will be occur this summer.
C. Revise Article 41 to read: "This policy shall have a minimum of $2,000,000 combined single limits for bodily injury and property damage for each occurrence in excess of the applicable limits in the primary policies."

Item #3 Refer to the Drawings, Sheet A3.3 – Keynote 078400.A1

A. Clarification: Revise note to state: 'HEAD AND BASE OF WALL FIRE STOP JOINT TREATMENT SYSTEM AT INTERSECTION OF FIRE AND/OR SMOKE RESISTIVE SEPARATION ASSEMBLY, WITH ROOF ASSEMBLY, OR FLOOR ASSEMBLY.'

Item #4 Refer to the Drawings, Sheet A4.1 – Text note 102600.A1

A. Clarification: Revise note to state: 'PROVIDE FULL HEIGHT STAINLESS STEEL CORNER GUARDS AT ALL OUTSIDE CORNERS OF SHAFT'

Item #5 Refer to the Drawings, Sheet A4.1 – Text note 099123.A4

A. Clarification: Revise note to state: 'PAINT ALL SHAFT WALLS, BOTH INTERRIOR SIDE AND ROOM SIDE, WITH EPOXY PAINT, PAINTING SHALL ALSO INCLUDE RATED ACCESS PANELS'

Item #6 Refer to the Drawings, Sheet A3.3 – Door Hardware Schedule

A. See revisions below:

HARDWARE GROUPS					
HARD WARE	#	DESCRIPTION	PRODUCT NUMBER	FINISH	Mfr Code
HW SET 01 DOOR #104A GENERATOR ROOM	6	Butt Hinge	BB1168 5" X 4.5 X NRP	26D	Hager
	2	Closer Regular Arm	4040XP-EDA	AL	LCN
	1	Fire Rated Exit	9927L-F-LBR	US26D	Von Duprin
	1	Fire Rated Exit	9927EO-F-LBR	US26D	Von Duprin
	1	Gasketing	162 V Head and Jambs		NGP
	1	Astragal Set	137 NA		NGP
	1	Key Core	Per Owner	626	Best
HW SET 02 DOOR #104B GENERATOR ROOM	3	Butt Hinge	BB1168 4.5 X 4.5 X NRP	26D	Hager
	1	Closer Regular Arm	4040XP-EDA	AL	LCN
	1	Fire Rated Exit	99L-F	US26D	Von Duprin
	1	Gasketing	162 V Head and Jambs		NGP
Notes	A	Coordinate with UK Key Shop for Key Core, Contractor To Provide Core			
	B	Positive Latching Required At Rated Doors, Must Be Allowed To Exit At All Times			
	C	Lockset and Key Core Manufacturer To Be Verified By Owner			
	D	All Hardware To Be Fire Rated			

Item #7 Refer to the Drawings, Sheet A4.1 – Text note 323113.A1

A. Clarification: Revise note to state: '8' HIGH WOOD FENCE, MATCH EXISTING DESIGN.PROVIDE 8'-0" CLEAR WIDTH GATE WITH CONTINUOUS HINGES, CANE BOLT AND LOCKING HARDWARE.OWNER TO PROVIDE PADLOCK WITH KEY CORE.

Item #8 Wood Fencing and Gate

A. Clarification: All wood components of fencing system and gate to be coated with Behr Premium Solid Color Waterproofing Stain and Sealer to match existing fence system.

Item #9 Refer to the Drawings, Sheet E6.0

A. Refer to new panelboard 104/E/P-1 and associated transformer: Provide temporary power for this panelboard from existing panelboard 108/E/P-01 as necessary for generator/equipment startup. Complete permanent connection as shown after distribution board 002/E/EDP-4 is operational.

Item #10 Refer to the Drawings, Sheet M3.0

A. Add general note to read “CONTRACTOR SHALL BE RESPONSIBLE FOR RELOCATING EXISTING FIRE PROTECTION BRANCH PIPING AND PROVIDING AND INSTALLING NEW FIRE PROTECTION HEADS AS NECESSARY TO ACCOMMODATE NEW FLOOR PLAN.”
B. Add general note to read “CONTRACTOR SHALL PROVIDE AND TURN OVER A FULL TANK AFTER ALL TESTING HAS BEEN PERFORMED.”

Item #11 Refer to the Drawings, Sheet M4.0

A. Refer to bubbled changes on attached sheet.

Item #12 Refer to the Specifications

A. Add the attached spec section “202200-Insulation” to the spec book.

END OF ADDENDA ITEMS

PRE-BID MEETING AGENDA
Good Samaritan Emergency Generator Upgrades
CCK-2557.0-1-24

Date/Time: 05/01/2024 at 10:00am EST

Location: Meet at Esports Theater in the Cornerstone Building, 411 S. Limestone Lexington KY

SIGN IN SHEET

Name	Organization	Phone	E-mail address
Dan Zornes	Glenwood	393-3263	DW2@Glenwoodelectric.com
Jeff Ely	Glenwood	859-446-2864	Jely@glenwoodelectric.com
Shawn Skeese	UK FMMC	859-333-2754	Shawn.skeese@uky.edu
Brian Harr	CPMD		
Alan Kellum	CMTA		
Sean Reynolds	L&D	859-326-0083	Seanedwardsreynolds@gmail.com

University of Kentucky

CCK-2557.0-1-24 Good Sam Emergency Generator Upgrades

Question and Response Log

Question Deadline 05/06/2024

#	Question	Response
1	What is project Budget?	The estimate is less than $2M.
2	Will you be issuing a revised Bid Form that includes the Alternates?	Yes
3	Article 41 of the Special Conditions indicates $100 million of Excess Umbrella Liability Insurance is required. Please confirm if this is correct?	Revise article 41 to read: This policy shall have a minimum of $2,000,000 combined single limits for bodily injury and property damage for each occurrence in excess of the applicable limits in the primary policies.
4	Since the Generator Set, Switchgear and Transfer Switch are provided by Owner, will the Owner also be providing for the Demonstration and Training?	Factory startup and training on individual equipment was purchased with the equipment. The Contractor will be responsible for coordinating these services and will need an electrician on-site to assist and to basic training on the overall system operation.
5	Drawing S1.1 indicates the Contractor is responsible for 3rd Party Special Inspections. Please confirm.	Special inspections will be provided by the Owner as required. The Contractor shall be responsible for scheduling these inspections through the Engineer and Owner in a timely manner.
6	Can cutsheets/submittals be provided for owner provided equipment including generator, generator components and parallelling gear?	Submittals are attached to this addendum.
7	Will Simplex be providing a quote to UK for the bidding contractor to carry in their bid?	The Contractor is to obtain a quote directly from Simplex and include this in his bid.
8	Can liquidated damages be removed from this project due to lead times of the contractor furnished panelboards?	Contract completion times will be adjusted as appropriate if delivery becomes a scheduling issue.
9	On Drawing M3.0 Fuel Oil Pump is shown as FOP-1 No FOP-1 is called out on the Equipment Schedule. Fuel Oil Pumps are in the HVAC spec Section 231213. Please clarify.	Schedule added for FOP-1 and piping schematic has been adjusted
10	In regards to Fuel Oil Pumps, none are shown in the Fuel Oil Piping Schematic on Drawing M4.0. Please clarify.	Schedule added for FOP-1 and piping schematic has been adjusted
11	The Fuel Oil Piping Schematic on Drawing M4.0 shows a Fill Line Connection. What is the size of this connection and where will it be in relation to the tank? This line is not shown on the Plan View Drawings. Fuel Oil Tank Spec 231214 references tank openings and sizes and refers to attached drawing. No drawing is shown. Please provide contact information for Highland tank.	Highland tank rep: Ryan Parsons 859-623-8520. Fill line is 4". Drawing has been added to sheet M4.0.
12	No piping detail is shown for UH-1 on Drawing M3.0. Please provide detail.	Piping detail added to sheet M4.0
13	Detail 2 on Drawing M4.0 shows the generator exhaust running up the exterior of the building. How is this piping to be supported?	Contractor shall provided steel structural support as necessary.
14	Who is responsible for the initial filling of the fuel oil tank?	Contractor shall provide and turn over a full tank after all testing has been performed.
15	Will a permit from the Fire Marshall be required for this project and if so, who is responsible for the permit if required?	Contractor shall be responsible for receiving fuel oil permit for the state fire Marshall.
16	Will the Flex Connectors shown in Detail 2 on Drawing M4.0 be provided with the generator?	Flexible connectors to be provided with the generator.
17	Please provide a detail for the Thimble shown on Detail 2 on Drawing M4.0.	Contractor shall provide and install manufacture approved thimble.
18	Please provide an Insulation Specification for this project.	Spec section provided.
19	Fuel Oil Piping Schematic shown on Drawing M4.0 shows (2) vents to outside off of the day tank. What size are they and where will they terminate outside of the building?	Vent scope clarified on piping schematic

SECTION 202200 - INSULATION - MECHANICAL

1. GENERAL

   A. The Contractor's attention is directed to the General and Special Conditions, General Conditions-Mechanical and to all other Contract Documents as they apply to this branch of the work. Attention is also directed to all other sections of the Contract Documents which affect the work of this section and which are hereby made a part of the work specified herein.

   B. Work under this section shall include all labor, equipment, accessories, materials and services required to furnish and install all insulation, fittings and finishes for all mechanical systems specified herein and/or as indicated.

   C. Application of insulation materials shall be done in accordance with manufacturer's written recommendations. Where thickness of insulation is not specified, use applicable thickness recommended by manufacturer for specific use. Insulation shall be applied by a company regularly engaged in the application of insulation and any work deemed unacceptable by the Engineers shall be removed and properly installed at the expense of the Contractor.

2. MANUFACTURERS

   A. Insulation shall be as manufactured by Manville, Knauf, CertainTeed, Owens-Corning, Armacell or approved equivalent. Insulation sundries, adhesives, and jackets/covers shall be as made by Benjamin Foster, Zeston, Speedline, Proto, Childers, Vimasco or approved equivalent.

3. FIRE RATINGS AND STANDARDS

   A. Insulations, jackets and facings shall have composite fire and smoke hazard ratings as tested by ASTM E-84, NFPA 255 and UL 723 procedures not exceeding Flame Spread 25, Smoke Developed 50.

   B. Adhesives, mastics, tapes and fitting materials shall have component ratings as listed above.

   C. All products and their packaging shall bear a label indicating above requirements are not exceeded.

   D. Duct linings shall meet the Erosion Test Method in compliance with UL Publication No. 181.

4. GENERAL APPLICATION REQUIREMENTS

   A. Insulation shall be applied on clean, dry surfaces in a neat and workmanlike manner reflecting the best current practices in the trade. Insulation shall not be applied to piping, ductwork or equipment until tested, inspected and released for insulation.

   B. All insulation shall be continuous through walls, ceiling openings and sleeves. However, insulation shall be broken through fire walls. All covered pipe and ductwork is to be located a sufficient distance from walls, other pipe, ductwork and other obstacles to permit the application of the full thickness of insulation specified. If necessary, extra fittings and pipe are to be used. No noticeable deformation of insulation or discontinuity of vapor seal, where required, will be accepted.

   C. "Concealed", where used herein, shall mean hidden from sight as in trenches, chases, furred spaces, pipe shafts, or above hung finished ceilings. "Exposed" shall mean that piping or equipment is not "concealed" as defined above. Piping and equipment in service tunnels, mechanical equipment rooms, mechanical platform, mezzanine, penthouses, storage areas, unfinished rooms, etc. is to be considered as "exposed".

D. Existing and/or new insulation removed and/or damaged during course of construction shall be repaired or replaced as directed by the Engineer.

E. Vapor barrier jackets shall be applied with a continuous unbroken vapor seal. Do not use staples thru the jacket. NO EXCEPTIONS!

F. All insulation shall be installed with joints butted firmly together.

G. The Contractor shall ensure that all insulation (piping, ductwork, equipment, etc.) is completely continuous along all conduits, equipment, connection routes, etc. carrying cold fluids (air, water, other) and that condensation can, in no way, collect in or on the insulation, equipment, conduits, etc. Any such occurrence of condensation collection and/or damage therefrom shall be repaired solely at the expense of the Contractor.

5. PIPING SYSTEMS

A. GENERAL

(1) Bevel insulation and jacket at all points where insulation terminates at unions, flanges, valves and equipment. Note: Applies to hot water lines only; cold water lines require continuous insulation.

(2) Pipe insulation shall extend around valve bodies to above drain pans in hydronic equipment over pumps, etc. to ensure no condensation drip or collection.

(3) Factory molded fittings may be installed in lieu of built-up fittings. Jackets to be the same as adjoining insulation. Insulated fittings must have same or better K factors than adjoining straight run insulation.

(4) Valves, flanges and unions shall only be insulated when installed on piping whose surface temperature will be at or below the dew point temperature of the ambient air.

(5) Insulation shall not extend through fire and smoke walls. A UL-listed penetration system shall be used for each fire or smoke wall penetration in accordance with KBC. Materials used such as caulk, sleeves, etc. shall be manufactured by 3M, Hilti, or equal.

B. INSULATION SHIELDS

(1) Metal insulation shields are required at all pipe hangers where the piping is insulated. Metal shields shall be constructed of galvanized steel, formed to a 180-degree arc. Insulation shields shall be the following size:

PIPE SIZE	SHIELD GAUGE	SHIELD LENGTH
2" AND LESS	20	12"
2 1/2" TO 4"	18	12"
5" TO 10"	16	18"
12" AND GREATER	14	24"

C. INSULATION MATERIAL (FOR THE FOLLOWING SYSTEMS)

Insulation shall be Owens-Corning Model 25ASJ/SSL, or approved equivalent fiberglass pipe insulation with an all service jacket. The insulation shall be a heavy density, pipe insulation with a K factor .23 at 75°F mean temperature. The insulation shall be wrapped with a vapor barrier jacket. Approved manufacturers are listed in Section 2 – Manufacturers. The jacket shall have an inside foil surface with self sealing lap and a water vapor permeability of .02 perm/inch. All circumferential joints shall be vapor sealed with butt strips. All insulation shall be installed in strict accordance with the manufacturers' recommendations. The following pipes shall be insulated with the thickness of insulation as noted.

(1) High Pressure Steam and/or High Temperature Hot Water (306°F-450°F)

a. 1" and less pipe size: 1 ½" thick
b. 1 ¼" thru 1 ½" pipe size: 2" thick
c. 2" thru 4" pipe size: 3" thick
d. 5" and larger pipes: 3 ½" thick

(2) Medium Pressure Steam and Medium Temperature Hot Water (251°F-305°F)

a. 1" and less pipe size: 1 ½" thick
b. 1-1/4" thru 1-1/2" pipe size: 2" thick
c. 2" thru 4" pipe size: 3" thick
d. 5" and larger pipes: 3 ½" thick

(3) Low Pressure Steam (201°F-250°F)

a. 1 ½" or less pipe size: 1 ½" thick
b. 1 ½" and larger pipe sizes: 3" thick

(4) Steam Condensate

a. 1 ½" and less pipe size: 1 ½" thick
b. 2" and larger pipe size: 3" thick

D. ENGINE EXHAUST AND MUFFLER (INTERIOR ONLY)

(1) Rigid hydrous calcium silicate; K factor; .40 at 200°F mean temperature; 2" thick. Provide with a 6-oz. canvas jacket with fire retardant lagging.

E. STEAM/STEAM CONDENSATE & HOT WATER PIPING REMOVABLE JACKETING INSULATION

(1) All steam pressure reducing stations shall be installed with removable jacketing insulation to allow service to the station. This includes all fittings, valves, etc. on the steam pressure reducing stations. All steam condensate pumps shall be installed with removable jacketing insulation over reservoir. All steam traps 2 1/2" and larger shall have removable jacket insulation. All steam control valves shall be installed with removable jackets for maintenance. Designer shall coordinate with UK on removable jackets required for HVAC hot water components such as large control valves or strainers.

(2) Insulation shall meet at minimum the following specification:

a) Non-Asbestos Glass mat, type E needled fiber.
b) Temperature maximum of 450°F, Maximum water vapor transmission of 0.00 perm, and maximum moisture absorption of 0.2 percent by volume.

c) Jacket Material: Silicon/fiberglass compressed as required to give maximum 130F surface temperature depending on fluid medium in piping.
d) Construction: One piece jacket body with three-ply braided pure Teflon or Kevlar thread and insulation sewn as part of jacket.
e) Sewn lock stitch with a minimum 4 to 6 stitches per inch. The thread must be able to withstand the skin temperatures without degradation.
f) Hog rings, staples and wire <u>are not are not</u> acceptable methods of closure. Velcro straps alone are not acceptable unless written permission from UK (hook & loop method required).
g) No raw cut jacket edges shall be exposed.
h) Jackets shall be fastened using hook and loop (Velcro) straps
i) Provide a permanently attached Aluminum or stainless steel nameplate on each jacket to identify its location, size and tag number.
j) The insulation shall be designed to minimize the convection current in the space between the hot metal surface and the inner layer of insulation. To this end, during jacket fabrication, the layers of insulating mat shall be placed in an overlapping pattern.
k) Insulation must be sewn as integral part of the jacket to prevent shifting of the insulation.
l) Insulation thickness: As required for Touch Temperature Exterior of all jacket < 130F.

F. MECHANICAL ROOM INSULATION

(1) Provide Calcium Silicate insulation in mechanical room heating applications, where piping is more subject to abuse. Insulation in mechanical areas must be protected with an 8-oz. canvas jacket applied with lagging adhesive.

CALCIUM SILICATE INSULATION APPLICATION AND THICKNESS (INCHES)						
PIPE SYSTEM	TEMP		PIPE DIAMETER (inches)			
	RANGE DEG F	1	1.25-2	2.5 – 6	8	10+
HIGH PRESS STEAM (-76 PSIG)	320 - 500	3.0	3.5	4.0	4.0	4.0
MED PRESS STEAM (21-75 PSIG)	260-320	2.5	3.0	3.5	4.0	4.0

(1) Insulate all surfaces not requiring constant access.

(2) Provide removable insulation for surfaces requiring periodic access.

(3) Insulate all surfaces creating a burn hazard.

(4) Exposed piping in any room and all piping in boiler or mechanical rooms shall have an 8-oz. canvas jacket applied over the fiberglass factory ASU/SSL jacketing to further protect the insulation from abuse. This jacketing must be properly applied with lagging adhesive, such that the outer surface is smooth and free of wrinkles. The canvas jacketing in all mechanical areas is to be prepared by painting, and then painted according to the University of Kentucky standard

piping color coding. All chilled water piping insulation shall be completely sealed so that a perfect vapor barrier is achieved

G. JACKETS

(1) Exposed (Mechanical Rooms, Interior Finished Rooms and Storage Rooms)

All insulated piping installed in the above areas shall have a canvas or PVC jacket:

a. Exposed piping in any room and all piping in boiler or mechanical rooms shall have an 8-oz. canvas jacket applied over the fiberglass factory ASJ/SSL jacketing to further protect the insulation from abuse. This jacketing must be properly applied with lagging adhesive, such that the outer surface is smooth and free of wrinkles. The canvas jacketing in all mechanical areas is to be prepared for painting, and then painted according to the University of Kentucky standard piping color coding. All chilled water piping insulation shall be completely sealed so that a perfect vapor barrier is achieved

b. For all systems except steam, plenum rated PVC jacket equal to LoSmoke PVC jacket with flame/smoke rating of 25/50, ASTM-E84 test method. Minimum thickness 0.04 inches. Steam systems shall utilize plenum rated CPVC jacket with minimum thickness of 0.04 inches. Jackets shall be applied over top of specified pipe insulation. Approved equal manufacturers are Zeston and Speedline. Approved equal manufacturers are Zeston and Speedline.

(2) Exposed (Exterior)

In addition to the insulation specified for the exterior pipe, provide .016" aluminum jacket or PVC jacket 0.05” thick. The jackets shall be installed as recommended by the manufacturer to maintain water tight seal. All longitudinal and transverse seams to be sealed water tight. PVC jacket shall be Ceel-Co, Proto, or Zeston.

6. DUCTWORK SYSTEMS

A. GENERAL

(1) Duct sizes indicated are the net free area inside clear dimensions; where ducts are internally lined, overall dimensions shall be increased accordingly.

(2) Duct insulation shall extend completely to all registers, grilles, diffusers, and louver outlets, etc., to ensure no condensation drip or collection. The backs of all supply diffusers, plenums, grilles, etc. shall be insulated only if indicated by details on the drawings.

(3) Insulate the ends of slot diffuser plenum boxes.

(4) All flexible duct connections on insulated ductwork shall be externally insulated.

(5) All duct outside of building envelope, including rooftop duct, duct in unconditioned attic spaces above the insulation, etc. shall have two layers of specified insulation. This shall apply to supply air, exhaust air where air is run through energy recovery unit, outside air, return air, and combustion air intake ducts.

B. EXTERNAL INSULATION

(1) Outside Air

Owens/Corning “Faced Duct Wrap - Type 100", or approved equal, 2" thick fiberglass duct wrap, 1.0 pcf density factory laminated to a reinforced foil kraft vapor barrier facing (FRK) with a 2" stapling flange at one edge. Flame spread 24, smoke developed 50, vapor barrier performance 0.02 perms per inch. K factor shall not exceed .26 at 75°F. mean temperature. Minimum R-value of the 2” thick insulation shall be 7.4 out of package and 6.0 installed.

Special Notes:

a. Do not provide externally insulated duct per the above specification for any duct that is to be painted. Insulated duct that is to be painted shall be dual wall ductwork per specification Section 231200, Sheet Metal and Flexible Duct.
b. Where supply, return, and outside air ductwork is routed through an unconditioned attic or any other space outside of the building thermal envelope, the ductwork shall be provided with a minimum of 2 layers of duct wrap for a minimum R value of 11.0. Additionally, this shall apply to exhaust ductwork on entering side of energy recovery type air handling units.

END OF SECTION 202200

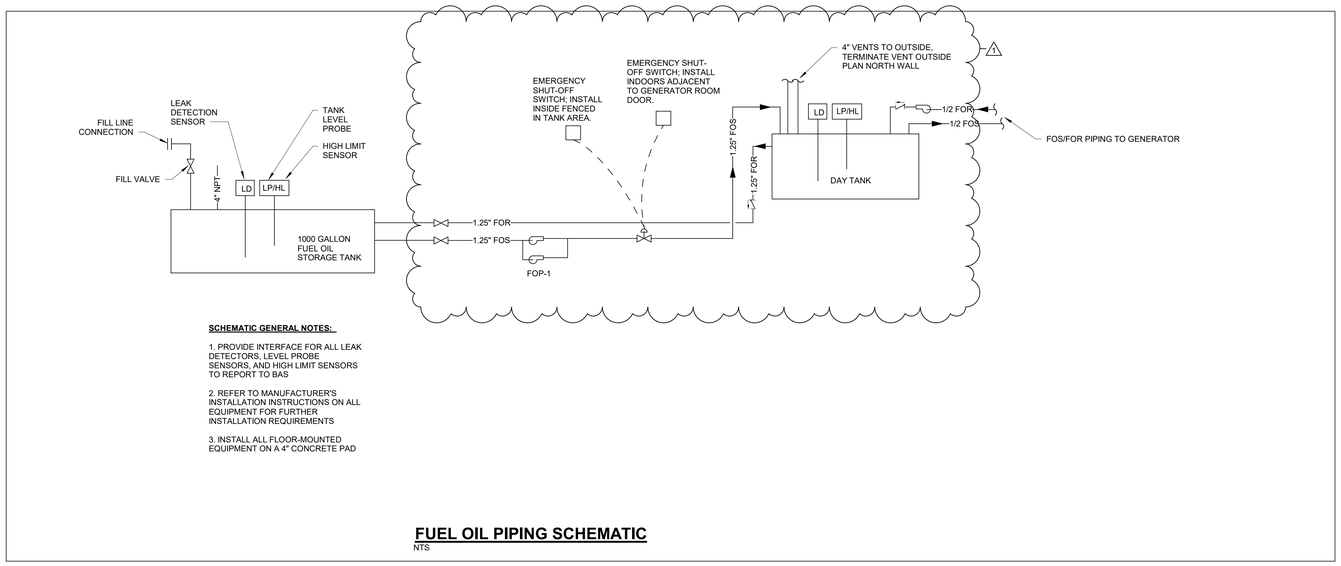

SCHEMATIC GENERAL NOTES:

1. PROVIDE INTERFACE FOR ALL LEAK DETECTORS, LEVEL PROBE SENSORS, AND HIGH LIMIT SENSORS TO REPORT TO BAS
2. REFER TO MANUFACTURER'S INSTALLATION INSTRUCTIONS ON ALL EQUIPMENT FOR FURTHER INSTALLATION REQUIREMENTS
3. INSTALL ALL FLOOR-MOUNTED EQUIPMENT ON A 4" CONCRETE PAD

FUEL OIL PIPING SCHEMATIC
NTS

1 FUEL OIL PIPING SCHEMATIC
SCALE: NONE

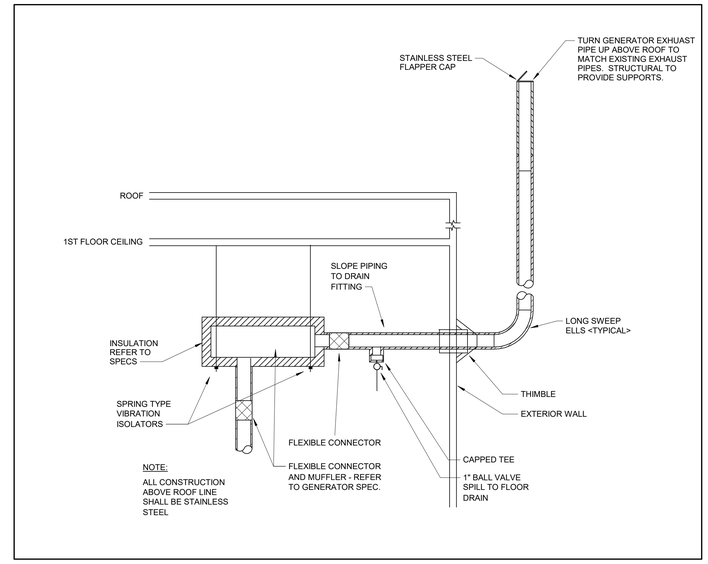

2 GENERATOR EXHAUST DETAIL
SCALE: NONE

FUEL OIL PUMP SCHEDULE

MARK	MANUFACTURER	MODEL #	SERVICE	TYPE	FLOW (GPM)	MOTOR HP	ELECTRICAL DATA VOLTAGE	PHASE	HZ	REMARKS
FOP-1	PHILLIPS	D-3	GENERATOR	DUPLEX PUMP SYSTEM	3	0.33	115 V	1	60	ALL

1

LOUVER SCHEDULE

MARK	MANUFACTURER	MODEL #	SERVICE	DEPTH (IN)	CONSTRUCTION	CFM	WIDTH (IN)	HEIGHT (IN)	FREE AREA (SF)	VELOCITY (FPM)	APD (IN. WG.)	BIRD SCREEN	DRAINABLE BLADE	REMARKS
L-1	RUSKIN	ELF6425DD	GENERATOR	6	EXTRUDED ALUMINUM	42377	120	108	51	925	0.09	Yes	Yes	

FUEL OIL TANK SCHEDULE

MARK	MANUFACTURER	MODEL	STORAGE CAPACITY (GPM)	DIAMETER (FT)	LENGTH (FT)	REMARKS
FOT-1	HIGHLAND	HT-1069	1000	4	11	ALL

REMARKS:

1. PROVIDE SADDLE STYLE SUPPORTS
2. USE UL-142 DOUBLE-WALL CONSTRUCTION
3. PROVIDE 2-HR RATED TANK.

1

STEAM UNIT HEATER SCHEDULE

MARK	MANUFACTURER	MODEL #	CFM	HEATING CAPACITY (MBH)	FLOW (LBS/HR)	DIMENSIONS (IN) LENGTH	WIDTH	HEIGHT	ELECTRICAL DATA HP	MOCP	VOLTAGE	PHASE	REMARKS
UH-1	TRANE	UHS-042	750	48.0	49	18	9	18	1/6	2.2	120 V	1	ALL

REMARKS:

1. UNIT MOUNTED DISCONNECT.

1

LOUVERED PENTHOUSE SCHEDULE

MARK	MANUFACTURER	MODEL #	SERVICE	HEIGHT (IN)	WIDTH (IN)	HEIGHT (IN)	CFM	FREE AREA (SF)	VELOCITY (FPM)	APD (IN. WG.)	REMARKS
LP-2	RUSKIN	PHB	GENERATOR 3	48	48	120	42500	71	596	0.05	ALL

REMARKS:

1. PROVIDE PNEUMATIC DAMPER
2. PROVIDE BIRD SCREEN

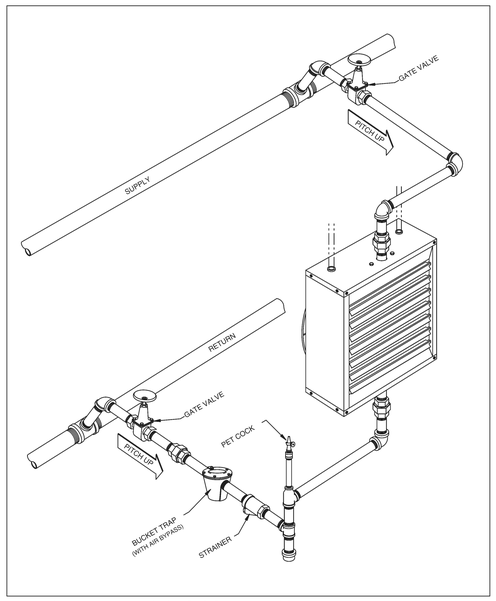

3 UNIT HEATER PIPING SCHEMATIC
SCALE: NONE

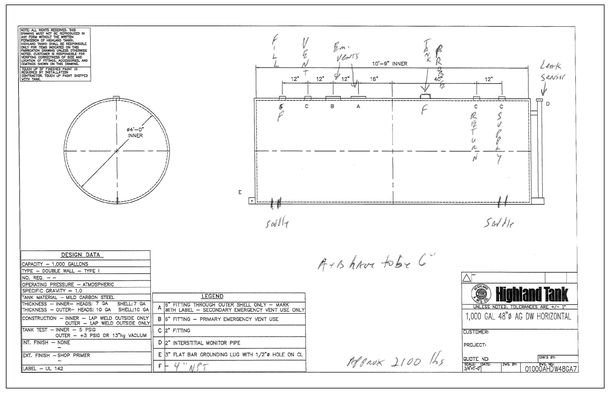

4 FUEL OIL STORAGE TANK DETAIL
SCALE: NONE

CMTA
2429 Members Way
Lexington, KY 40504
T: 859 253.0892 F: 859 231.8357

CONSTRUCTION DOCUMENT

STATE OF KENTUCKY
SCOTT CHANDLER CLAXTON
27243
LICENSED PROFESSIONAL ENGINEER

HealthCare

EMERGENCY GENERATOR UPGRADE
UK HEALTHCARE - GOOD SAMARITAN HOSPITAL
310 SOUTH LIMESTONE
LEXINGTON, KY 40508

MECHANICAL DETAILS AND SCHEDULES

CLIENT/CMTA JOB #:	2557.0/XKGU21
DATE:	JULY 17 2023
DRAWN:	KS
CHECKED:	SC

REVISIONS

1	ADDENDUM 1	05.10.24

M4.0

FILENAME: 2020.XKGU21 Central Plks_detached.rvt
PLOT DATE: 5/9/2024 4:28:43 PM

Submittal Review Summary

Project: Emergency Generator Upgrade – UKHC Good Sam – 2557.0

Submittal: Generator Set

CMTA Project Code: XKGU21 Reviewed by: ARK

Date Received: 2022-07-27 Date Returned: 2022-08-16

Corrections or comments made on the shop drawings during this review do not relieve the contractor from compliance with requirements of the drawings and specifications. This check is only for review of general compliance with the information given in the contract documents. The contractor is responsible for confirming and correlating all quantities and dimensions; selecting fabrication processes and techniques of construction; coordinating his work with that of all other trades; and performing his work in a safe and satisfactory manner.

- ☐ **Reviewed**
- ☒ **Furnish as Corrected**
- ☐ **Rejected**
- ☐ **Revise and Resubmit**

COMMENTS:

1. System Overview para. 1.1 p.10: The system consists of three generator sets, not two as noted.

2. System One-Line para. 1. p.11: The one-line diagram is mirrore[illegible]. S[illegible] .

3. System Operating Features para. 1.5.05 p.16: Relabel ATS-10 to be 108 ATS-10 throughout the document. Add the missing transfer switch 108 ATS-11 (formerly listed as 108 ATS-9) to the list.

4. 3009518009-P-SWGR: Cubicle arrangement is a mirror of the required configuration. The transition section must be in the 5th position from left when facing the front of the gear to coordinate with existing structure per the contract documents. See diagram below. Relabel ATS-10 to be 108 ATS-10.

5. 3009518009-P-MCC: Clarify whether cubicle is being supplied with 24VDC or 125VAC control power input.

2429 Members Way Lexington KY 40504 859.253.0892 www.cmta.com

MEP Engineering | Performance Contracting | Zero Energy Engineering | Technology | Commissioning

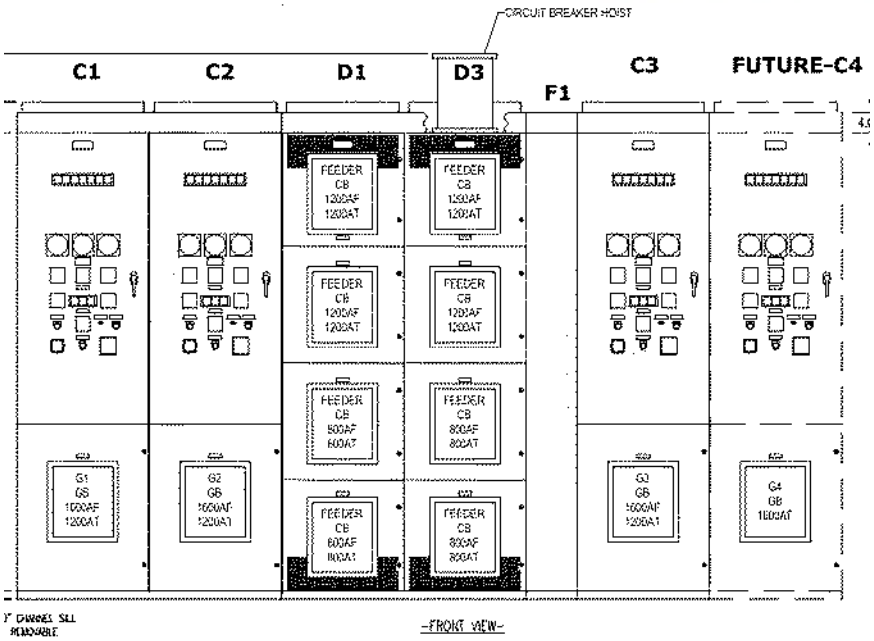

6. Human Machine Interface Overview p.54: Power Metering Screens - The system consists of three generator sets, not two as noted.

7. ATS Specification Sheet p.274: New ATS marking is to be 108 ATS-10.

End of comments

2429 Members Way Lexington KY 40504 859.253.0892 www.cmta.com

MEP Engineering | Performance Contracting | Zero Energy Engineering | Technology | Commissioning

Russelectric Switchgear

SUBMITTAL

CUSTOMER:

UNIVERSITY OF KENTUCKY

PROJECT:

UKHC Good Samaritan Switchgear

RyanSmith
RyanSmith@BoydCat.com
(502) 774-4441

Telephone 781 749-6000

Russelectric
A Siemens Business

South Shore Park
Hingham, MA 02043-4387

SUBMITTAL TRANSMITTAL

Date: 5/18/2022 11:46:38 AM

To: BOYD COMPANY
10001 LINN STATION RD
LOUISVILLE, KY 40223-3810

Job Name: UK GOOD SAMARITANS HOSPITAL

Location: LEXINGTON, KY

Customer: BOYD COMPANY
Contact: BJ Stout - bjstout@BoydCat.com

Purchase Order No.: PO001271472-1

Russelectric Shop Order No.: 3009518009

Quantity of Submittals Enclosed: One Electronic Copy.

Status of Job:

Unreleased. Submittals are for approval. Actual shipment will be determined at the time of order release and will be dependent upon receipt of all engineering information and available production capacity at the time.

If there are any questions about this submittal, please contact Arthur N. Ulrich Co. at (740) 927-8244

cc: tmulrich@anu-co.com (Electronic Copy)
Russelectric, A Siemens Business
Ayman Eldinary
Darren Cundari
Javier Capriles
Michael Peters
Jeanne Hesketh
Jeff Cunningham

SUBMITTAL DATA

GENERATOR SWITCHGEAR AND AUTOMATIC
TRANSFER SWITCHES

FOR

UK GOOD SAMARITANS HOSPITAL
LEXINGTON, KY
RUSSELECTRIC SHOP ORDER NO. 3009518009

RTS-30 SERIES Bypass/Isolation Switches

Russelectric
A Siemens Business

Submittal

272 Pages. Document 1 of 1

Job #3009518009

UK GOOD SAMARITANS HOSPITAL

LEXINGTON, KY

Tel: (781)-749-6000
russelectric.com

Overview

Submittal Description:

Rev0 Submittal - Physical details, BOM's and a System Description is provided for the items listed below.

1. Master control switchboard cubicle designated as MCC.
2. Generator paralleling distribution switchboard designated as ESWGR
3. Remote operator interface panel.
4. 24vdc station battery system.

Upon release of the new equipment; the information listed below is required

1. Confirmation that the shipping splits splits for the ESWGR switchgear are accurate
2. Confirmation that the conduit entry which is shown as "Top" on the ESWGR switchgear is correct.
3. Drawings on any ATS's at the facility that are not Russelectric. This is required to show accurate termination locations on the interconnect drawings for the existing ATS's.

Submittal Revision History

Document Revision	Date	Recorded By	Sheets	Description
0	5/26/2022 4:19:45 PM	jfoley		Rev0 Submittal for emergency distribution/control switchboard ESWGR and remote operator interface panel. A 24vdc station battery system is also being provided

Table of Contents

System Description **8**

ESWGR BOM **32**

ESWGR Physica Details **37**

MCC BOM **42**

MCC Physical Detail **45**

ROIP BOM **46**

ROIP Physical Detail **48**

Scada BOM **49**

SCADA Submittal **51**

Station Battery BOM **85**

Station Battery Cell Info **87**

Station Battery Charger Info **107**

Station Battery Rack Info **113**

Components **114**

ALLEN BRADLEY

1. Panel Mount Signaling Alarm 114

BASLER

1. BE1-32R-OU Reverse Power Relay 118

CARLO GAVAZZI

1. DUB 01 Overvoltage Relay 130

CLAROSTAT

1. Potentiometers, decades and dials 134

CROMPTON

1. 007 ANSI Synchroscope 135
2. Paladin Class 0.5 transducers 250 series 137

3. 256 - SyncroCheck..... 150
4. 007 Series Compact ANSI Switchboard Meter..... 153
CRYDOM
1. Series F18 SCR-DIODE Modules..... 177
ELECTRO SWITCH
1. Series 24 Switches..... 179
FERRAZ SHAWMUT
1. USCC & USM Fuse Holders..... 185
2. Fuses (ATDR, ATQR, ATMR)..... 187
GE FANUC
1. Versamax Control and IO..... 195
2. PACSystems RX3i CPE330..... 197
IDEC
1. SLC40 Annunciator..... 219
ITI
1. 120 Current Transformer..... 227
2. 190-190X Current Transformer..... 229
KENALL
1. Sentinall 2000 Series..... 231
MOXA TECH
1. MB3170 Modbus Ethernet Converter..... 232
SIEMENS
1. 9410 Meter Overview..... 235
SPECTROL
1. Precision pots & turns..... 241
SQUARE D
1. Class 9070-T CPT's..... 242
WAGO
1. 858 Relay..... 249
WONDERWARE
1. InTouch v2020..... 255
2. Wonderware Box PC Series E..... 271

1 System Description

1.0 Introduction

This section contains the system description for the Russelectric Standby Generator Control Switchgear for UK GOOD SAMARITAN HOSPITAL, LEXINGTON, KENTUCKY, Shop Order #3009518009. Refer to ***Section 2***, *Operating Instructions* for the procedures necessary to operate the switchgear.

1.0.01 Revision History

Revision No.	Date	Recorded By	Description
0	**5/24/2022**	**J Foley**	**First Release**

1.1 Overview

The standby generator control switchgear is designed to automatically control and supply generator power to the facilities automatic transfer switch loads. Emergency power is derived from two Caterpillar 750kW, 277/480V, 3-phase, .8 power factor, 60Hz, diesel-driven generator sets.

The system is controlled by a primary and redundant PLC. The acronym "PLC" refers to the Programmable Logic Controllers embedded in the switchboard as the primary component in all control circuits. All PLCs are networked to form one distributed control system. This control system utilizes multiple programs of complex software circuits that govern the entire Russelectric system. Two GE RX3i PLCs act redundantly as the main computers that control all of the Russelectric switchgear through distributed digital and analog interface I/O modules.

In the event of a normal power failure, the generators automatically start, parallel, and supply emergency generator power to the building loads. The generator control switchgear is equipped with an alarm system that automatically shuts down an engine if an engine failure occurs. Load shedding shall occur when the load exceeds generator capacity. When normal power returns, the building loads are transferred back to the normal source. The generators shut down and resume stand-by status until the next power failure occurs.

System control of the various switchgear line-ups, and control switchboards has three categories:

1. Full Automatic - requiring no intervention by building personnel
2. Manually Initiated Automatic Sequences - building personnel select various modes, load transfers, or test functions from operator interface panels mounted at the switchboards or remote locations.
3. Full Manual - requiring the building personnel to perform all functions. Manual functions are usually generator control and circuit breaker operations.

NOTE: Automatic safety functions remain in effect in all operating modes.

The following equipment is provided under Shop Order 3009518009:

Item #20000: The Master Control Switchboard, as shown on drawing #3009518009-P-MCC consists of:

- One Master Control Cubicle (CC)

Item #21000: The Generator Paralleling Switchboard, as shown on drawing #3009518009-P-ESWGR consists of:

- Three Generator Control/ Circuit Breaker Cubicles (C1,C2 & C3)
- Two Four Stack Distribution Circuit Breaker Cubicle (D1 & D2)
- One Transition Cubicle (T1)

Item #22000: The Remote Operator Interface Panel, as shown on drawing #3009518009-P-ROIP

Item 23000: One 1000 AMP Automatic Bypass/Isolation Load Break Closed Transition Transfer Switch 30 cycle, (RTS30-ABLC10004AMF1-RPTCS) (ATS-10)

Item #1000: One 24vdc Station Battery Systems that consists of:

- 20 – Nickel Cadmium Batteries
- Two Step Seismic Rack
- 25 amp Battery Charger in a wall mounted enclosure

1.2 System One-Line

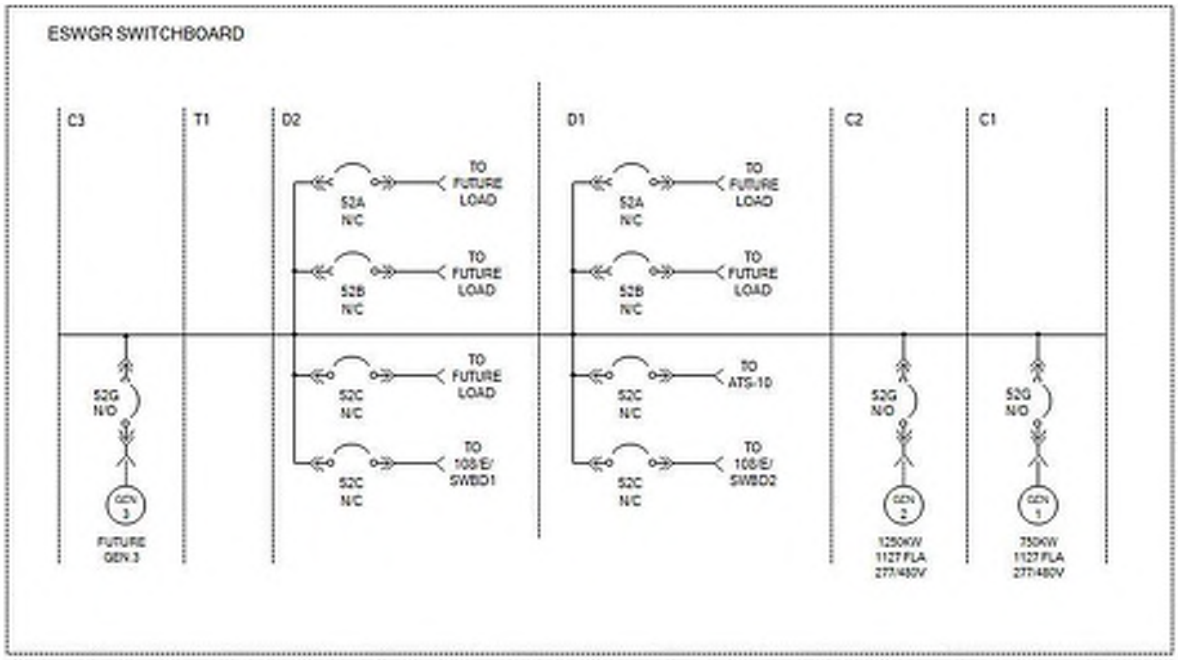

1.3 Operational Overview

A. All system operation and control functions have been coordinated and integrated such that during automatic and/or manual operation, no unsafe condition shall occur, no malfunction of intended operation shall occur, and the highest possible reliability of operation shall be maintained.

B. All selector switch circuitry has been coordinated to ensure that the various settings available do not cause a malfunction of the intended system operation.

C. In Normal/Standby operation, the main circuit breakers will be positioned as follows:
   - Generator Breakers Open
   - Feeder Breakers Closed

D. Breaker Interlocks: Generator Breakers can close with line side voltage available. Either of the conditions listed below must exist to allow closure of a generator breaker:
   - All Gen Breakers open
   - In-phase condition across the breaker

1.4 Automatic Operation

1.4.01 Automatic Start Sequence

A. Automatic Start Sequence: Control circuits have been provided to produce the following normal operating function when a system start command is given to the engine generator standby system.
   1. Upon receipt of a start signal, start all the diesel generators.
   2. Close the generator output circuit breaker for the first generator to reach 90% operating voltage and a frequency of 58HZ.
   3. Once the next generator (random selection) has reached operating voltage and frequency, it shall synchronize to the unit on-line and close into the bus.
   4. In like manner, each generator shall synchronize to the on-line units and close into the bus, independent of the other units, until all available units are on the bus.
   5. Provide positive lockout such that no two engine generators can be connected to a dead bus simultaneously.
   6. Upon receipt of a stop signal, each individual generator circuit breaker shall open and the engine generator shall continue to run at no load for a cool down period before complete shutdown.

B. Automatic Transfer Switch Control:
   1. When a start signal is received from any automatic transfer switch, initiate an engine start sequence.
   2. Once the first generator closes to the emergency bus the priority 1 automatic transfer switches will transfer to the emergency position.
   3. As any remaining generators close to the emergency bus the respective priority transfer switches are signaled to transfer to the emergency position by the switchgear.
   4. Failure of either engine generator shall initiate load shedding if there is an overload or underfrequency condition. Priority 1 loads can never be shed.
   5. When the utility power returns, and after an adjustable stabilization period (set at each ATS

controller), the automatic transfer system retransfers the building loads to utility power. Once all loads have been transferred to utility power, an engine start signal will no longer be present.

1.4.02 Failure Scenarios

Throughout the many load transfer schemes designed into the Russelectric system, equipment failure scenarios have been taken into account. Programmed reactions to these scenarios will activate to insure that building loads are energized under a stable mode. Circuit breakers that fail to open or close when needed during an automatic function shall cause the system to abort the intended transfer, annunciate the failure, and, in most cases, operate other breakers to safely accommodate the building's load.

A. PLC Failures

1. Failure of a single PLC shall be displayed on the system control section. Automatic operation shall be controlled by the redundant processor.
2. Failure of both PLCs, or the I/O network are displayed on the system control section. System operation will default to manual control. Hardwired safeties are provided, outside of the PLCs, to allow an operator to safely control the system. Under frequency load shedding is also hardwired outside of the PLC and will shed all non-priority 1 loads.

   Upon restoration of a PLC, or the I/O network the system will return to automatic operation. Once the remaining PLC is restored it will synchronize and provide redundancy to the online PLC.
3. Failure of an engine cubicle distributed I/O drop shall be displayed on the engine control cubicle. Engine operation will default to manual control. Hardwired safeties are provided, outside of the PLC to allow an operator to safely control the engine. Any engine that was on line shall remain on line.
4. Failure of an individual I/O module shall be displayed on the system control section. Automatic functions associated with the module will be disabled.

B. Failure of a generator bus

1. During any automatic operation, the failure of the generators results in immediate retransfer to normal power, once available. Stabilization time delays are bypassed to prevent being locked out from a good source.

C. Failure of a generator breaker to close

1. The failure of a generator breaker to close shall cause the associated generator to be locked out, an alarm horn to be sounded, and the failure to be displayed in the operator interface panel on the system control section & annunciated on the generator control section.
2. When an operator resets the generator alarm using the engine selector switch located on the generator control section, and on the generator mounted control as appropriate, the generator shall be allowed to restart and attempt to close to the generator bus.

D. Failure of a generator breaker to open

1. The failure of a generator breaker to open shall cause the associated generator to continue to run (if possible), an alarm horn to be sounded, and the failure to be displayed in the operator interface panel on the generator control section.
2. Once the breaker is opened, and an operator resets the generator alarm using the engine selector switch located on the generator control section, the generator shall be allowed to restart

1.5 System Operating Features

1.5.01 ATS Load Test

Automatic Transfer Switch Load Test

1. ATS load test mode is selected through the ATS load control set points screen on the Operator Interface panel (OIP).
2. A Load Test signal is issued to all selected automatic transfer switches. The load test signal at the automatic transfer switch will simulate a loss of utility power and cause the transfer switch to issue an engine start signal and transfer to the emergency position after the switchgear determines that adequate capacity is available. A bypass circuit is provided to allow the ATS switches to return to their normal positions if the generator system fails.
3. Detailed operation will be as described in Automatic Transfer Switch Control section of this document and the ATS operating manuals.

1.5.02 No-Load Test

A No-Load Test function button is provided on the operator interface panel (OIP) to permit supervised testing of the system. When the function key is enabled the system will automatically start all standby engine-generator sets, synchronize them, and close their breakers to the emergency bus; but the loads remain connected to the normal supply.

NOTE: Generator Demand operation is disabled during a No Load Test.

1.5.03 Load Bank Test

Generators may be load tested using the load bank breaker. Any combination of engines may be selected by enabling them using the operator interface panel (OIP). The three modes available are Manual, Concurrent and Consecutive. In the Manual mode each generator will remain in the test

mode until ended by the operator, the remaining modes allow testing of the generators concurrently (all at the same time) or consecutively (one at a time) for a set duration. The duration of these tests (total or individual), as well as the load bank cool down duration, is adjustable on the OIP. Initiation of the load bank test is performed on the Operator Interface as well. The steps listed below are required to initiate a Load Bank Test.

1. The Load Bank Test soft button is activated on the operator interface panel.
2. The enabled engine-generator(s) are started.
3. After the engine-generator(s) have synchronized to the generator bus, the remote load bank breaker will be closed and the load bank control panel will be turned on.
4. The operator must manually add load using the load bank control panel supplied by others.
5. The system will test each generator using the supplied test type. If the test type selected is consecutive testing, the on-coming generator will synchronize to the generator bus. The off-going generator will ramp load off before opening its breaker. This will maintain continuity of power to the load bank for fan operation.
6. Upon conclusion of the test, the Load Bank Test soft button is de-activated.
7. After the load bank cool down period, the generator breaker(s) open.
8. The generators shall then go through the cool down period and the generators are placed in readiness for a power failure.

NOTE: If an automatic engine start occurs during load bank testing, a "load dump" contact will be picked up to shut down the load bank and the engines made available for emergency operation. If a load bank dump provision is not available the load bank breaker will trip.

1.5.04 Gen Demand (kW Based Spinning Reserve)

A generator demand sensing program is provided in the master PLC to remove excess generators from the bus when the connected load decreases. This program is designed to insure that adequate capacity is available for sudden load changes while reducing the operating hours of the system generators.

1. A function key on the operator interface panel provides for generator demand operation as follows. When the function key is enabled the programmable controller monitors the load on the generator bus and will initiate signals to add or subtract a generator as required. In a normal power failure operation, generator demand sensing will, after the spinning reserve enable time delay (as determined by the operator interface panel), be placed into operation. Generator Demand timer and status indication is provided on the Operator Interface Generator Demand screen.
2. The engine starting and stopping sequence can be changed through the operator interface panel. The start/stop sequence is provided to allow the operators of the system to adjust the total operating hours of each engine-generator for a planned maintenance schedule. Sequence set points are reserved for each engine in the system. The engine selected with a sequence set point containing a value of 1 is the base engine; the one with a value of 2 is sequence position no. 2,

etc. If the sequence is changed during an automatic operation, any engine on line will remain on line. If the engine selected as the base engine is not on line, it will be immediately started and placed on line. The engine-generator that is selected as sequence position no. 2 will be the first to be added to the bus and the last to be subtracted. Should an engine be locked out of the system, it will be skipped over and the next engine in sequence will be started or stopped as required.

3. Generator demand status indications are provided on the operator interface panel generator demand screen to indicate when the loading of the generating system reaches preset spinning reserve set point. The set point is field adjustable through the operator interface panel.
4. The increase gen capacity time delay has inverse time characteristics - the higher the loading - the shorter the time delay. The gen demand timer set points are programmable through the operator interface panel.
5. If the load on the generator bus decreases low enough that the last engine in sequence can be stopped and still maintain the minimum spare generating capacity set point value plus the decrease to increase deadband value (both adjustable via operator interface panel), the programmable controller will, after the time delay, signal the last engine-generator in sequence to be removed from the bus. Controls are provided to ramp load off of the engine before giving an engine stop signal. When the number of generators on line is equal to the minimum number of generators (as determined by the operator interface panel), the decrease sensing will be inoperative.
6. If the load on the generator bus increases such that the available generator bus capacity is below the minimum spare generating capacity set point, the programmable controller will, after the time delay, signal the next engine-generator in sequence to automatically start and close to the bus. An Increase Load Capacity function key is provided on the operator interface panel to allow an operator to immediately place the next engine-generator in sequence on line.
7. Should the load of any engine increase to above the Overload set point, all available engine-generator be started and placed on line. In addition, non-essential loads will be shed to reduce the load on the generator bus.

1.5.05 Load Controls

Load Control circuits are provided to match emergency system loads to available generator capacity, ensure against overloading the generator(s), and prevent the loss of critical loads. ATS priority setpoints are provided for the six automatic transfer switches. There are provisions for ten future automatic transfer switches. The automatic transfer switch priorities may be adjusted through the Operator Interface Panel. The list of prioritized ATS's are below:

ATS-10
108 ATS-4
108 ATS-3
108 ATS-5
B031 Fire Pump ATS
C125 ATS-6
C125 ATS-7
C125 ATS-8

C125 ATS-9

C125 Fire Pump ATS

Provision for 6 Future ATS's

The load control circuits provide the following operation:

1. When the first generator closes to the bus, the corresponding priority 1 ATS's will transfer to the the emergency postion.
2. Once the second generator is connected to the bus, the emergency generator control system will send control signals to the priority 2 ATS's, allowing them to transfer to the emergency position.
3. Should an overload condition occur (adjustable 90-125% of the engine rating), and after an adjustable 0-10 second time delay, the lowest priority ATS's will be shed. ATS's will continue to shed in reverse order of priority until the overload condition is cleared.

   (The overload time delay has inverse time characteristics - the higher the loading - the shorter the time delay.) (Note that priority 1 ATS's will not be shed and should be within the capacity of the smallest single engine generator). If operating in gen demand mode all available engines will be started and paralleled to the emergency bus. Once the bus is restored and excess generation is available the shed ATS's will be re-added.
4. Upon detecting an underfrequency condition all non-priority 1 ATS's will be shed and all available engines will be started and paralleled to the emergency bus. This feature will ensure the greatest continuity of service to the priority 1 ATS's. Automatic restoration of load will occur after the bus has returned to normal frequency and the underfrequency alarm has been reset.

   NOTE: Gen bus voltage and frequency alarms are automatically reset when an additional generator is closed to the bus. This allows previously shed loads to be re-added as long as the voltage or frequency condition does not return.

5. An auto load control function button is provided on the Operator Interface Panel (OIP). If the auto load shed function is toggled off, non-priority 1 loads will not be added to the emergency bus, and overload load shed will not occur. This will allow supervised loading of the engines up to their maximum rating. Should an under frequency condition occur, non-priority 1 loads will be shed as described previously.
6. Loads can be sub-prioritized from 1.00-98.99 to allow for control in sequencing loads on /off of the emergency bus.
7. The Load Add pushbutton function on the OIP will allow an operator to manually add lower priority loads to the emergency generator system. Each time the pushbutton is depressed, with the load controls in manual, the next priority will be added.
8. The Load Shed pushbutton function on the OIP will allow immediate load shed of the next lowest priority. Each time the pushbutton is depressed the next priority load will be shed. This pushbutton will remain functional in both manual and automatic operation; however, in the automatic mode, any shed load will be re-added once the button is released, provided the bus is capable of increased load. The load control routine implements elements of both engine count control and available kW control. The program can be setup as engine count or available kW control; however, the full benefit of the routines features will only be realized when the control is properly configured for both options.

Engine count load control was developed in order to avoid overload on parallel generator systems. The engine count is simply the number of engines on line. Loads are then assigned a priority equal to the number of engines on line. Priorities must be assigned so that the loads at each level do not exceed the generator capacity at that level. Engine count load control responds immediately to the addition of a generator. Loads are added as soon as generators are paralleled. With the implementation of PLC control, sequencers were created so that engine count loads were not added simultaneously. This takes the form of a decimal after the basic engine count. In an engine count sequencer, priorities are added one at a time up to the number of engines on line. Engine count systems must be programmed with the maximum load levels in mind; therefore, there may be a high level of unused capacity. Optional loads may not be added to the generator plant even though sufficient capacity remains.

Available kW control has been used to overcome the shortcomings of engine count systems. Using PLC control, the generator plant loading is monitored and loads are added up to the full capacity of the generators. Priorities are simply programmed in the sequence desired. Each load must include an Expected kW set point, which should be programmed for the anticipated load plus 10% using the operator interface panel (OIP).

Once a load is added, the remaining kW must be sensed. Due to startup times of equipment, a time delay is required before sensing the actual load to add the next priority. This time delay is especially significant when a large number of priorities are controlled. By combining elements of both systems, the rapid response of the engine count system is obtained, along with the ability to add additional loads on an available kW basis up to the full capacity of the generating plant. Load priorities are set as required for an engine count system. Additional loads may be programmed with a priority higher than the maximum engine count. These loads are added on an available kW basis only. All priorities 1.00 through 1.99 are added when the first generator is closed to the bus. Priority 1.00 is added immediately, and priorities 1.01 through 1.99 are then added as an engine count sequence - without regard to available kW.

Available kW control begins adding priority loads starting at priority 2.00 and continues as long as the anticipated kW for the next priority level is less than the available kW.

When a second generator comes on line all priority 1 loads (1.01 - 1.99) and the first priority 2 load (2.00) are added very rapidly. Properly prioritized, these loads fall within the capacity of a single generator plus the first load step of the second generator.

Engine count sequencing then continues through the engine count range (2.01 - 2.99).

Available kW control begins adding priority loads (3.00 and higher) after the engine count sequencer has completed adding the engine count loads.

This process continues as each subsequent generator is added to the bus. A block of loads assigned to the previous engine count - known to be well within the capacity of the on line generators is added very rapidly as each generator is connected. This feature greatly reduces the time required to add loads when all generators are already on line. Available kW sensing requires a longer time between load steps so that loads have time to start and be sensed before adding the next load step, to prevent causing an overload due to the loads starting after the sensing has signaled an additional load to add.

There are three rates used to add loads. The fastest rate (typically 1 second, adjustable from the operator interface panel) is used when the engine count is greater than or equal to the priority being added. The second moderate rate (typically 5-10 seconds, adjustable from the operator interface panel) is used when the priority being added is in the engine count range. This is used to prevent block loading from causing an undesirable fluctuation in generator output. The slowest rate of load addition (typically greater than 10 seconds, adjustable from the operator interface panel) is used when the priority being added is greater than the engine count.

Loads are shed in the opposite order as they are added. Shedding takes place based on kW overload based on the highest percentage load of a generator using an inversely proportional time delay in

the rate calculation. It is therefore required that all generators share the load equally in order to utilize their full capacity. Loads are also shed due to under frequency of the generating plant. Under frequency shedding typically occurs at a higher rate than kW overload shedding. Under frequency load shedding protects the critical loads when the generating plant may be incapable of developing full capacity or when elements of the kW load control system may malfunction.

Loads that are shed due to under frequency are not automatically re-added unless an additional generator is closed to the bus. This is because under normal conditions the kW load controls will prevent the generators from being overloaded. Under frequency shedding should only occur in abnormal conditions.

When a load is shed by kW control, the system will attempt to add the next load priority. If a load shed command is issued for a second time an overload latch is set. This prevents loads from being cycled. The overload latch is reset when another generator is added to the bus, the system returns to standby mode, or the gen bus alarm reset button is pressed.

By programming the priority and expected kW set points using the operator interface panel this routine can be made to operate as engine count or available kW alone.

If engine count only is desired then enter 9999 for the available kW for each load priority. Remember that no loads greater than the engine count range will be added.

If available kW only is desired then program all priorities higher than the maximum engine count. Only available kW will be used to add these loads.

The load control routine provides the flexibility to be used as either an engine count or an available kW load control function through the operator interface without changing the PLC program. By combining the attributes of engine count and available kW controls a higher level of availability can be achieved. Loads are added more quickly and up to the full capacity of the generating plant automatically. However, Expected kW set points should be verified from time to time to make sure the setting is reasonable for the load level.

An under frequency load shed timer adjustable set point is provided to determine the amount of time between loads shedding during an under frequency condition. This allows the generator bus the ability to recover and only shed a minimum amount of load.

1.5.06 ARC Flash Reduction

Arc Flash Reduction (AFR) is provided for all breakers. Each breaker is provided with an individual AFR mode switch that is capable of being locked in the *"On"* or *"Off"* position using a padlock or combination lock.

Enabling arc flash reduction increases the breaker's sensitivity to arc flash events allowing the breaker to clear an event faster to increase the safety of personnel in the area.

AFR mode of each breaker is monitored by the PLC and is annunciated on the CC door and on the Operator Interface Panel (OIP). Each individual switch will illuminate when its associated breaker's AFR mode is enabled. If an individual AFR mode switch is enabled; the alarm notifications listed below will occur.

- Light on the master control door will illuminate (Flashing Blue).
- Event will be displayed on the operator interface panel (Flashing Blue).
- Event status is available to the Building Management System (BMS) via the GE RX3i PLCs.

A user configurable ARMS TIMEOUT setting is provided on the OIP (1-240 minutes). After the preset time period has elapsed; the following will occur:

- An audible horn alarm will annunciate at the switchgear and the remote operator interface panel.
- Event status is available to the BMS system via the GE RX3i PLCs.

1.6 Manual Operation

The system is in manual operation when selected with the master control switch located on the MCC switchboard is in the “Manual” position. The system will also default to manual operation if both PLCs should fail. Breaker controls are hardwired outside of the PLCs. In this mode, the generators start automatically if a power failure occurs, but an operator must manually synchronize and parallel the generators to the bus by using the following components located on the master control cubicle:

- Voltmeter Selector Switch
- Voltmeter
- Synchroscope
- Frequency Meter.

Each synchronizing breaker includes a synchroscope switch that energizes the synchroscope, the synchronizing lights, and the manual sync-check relay. The sync-check relay prevents the circuit breaker from closing until the two sources are within acceptable limits of the bus. The use of one keyed-handle ensures that only one circuit breaker has its synchroscope switch on before breaker closure is allowed.

The synchroscope and frequency meter switches have separate keyed handles that are removable only in the off position. This ensures that only one switch is on at a time. One set of keyed handles is provided with the system.

A manual synchronize pushbutton is provided on each generator control cubicle door. In conjunction with the sync selector switch, this allows the operator to activate the synchronizer when manually paralleling the generator. Operation of this pushbutton places the synchronizer in “check” mode, which synchronizes the generator to the bus, allowing the operator to manually close the breaker.

1.7 Switchboard Features

1.7.01 Engine-Generator Control Cubicle Features

An automatic engine starting control and failure system is provided by the System Programmable Logic Controller to control the starting, stopping, and monitoring of each engine-generator.

Should a shutdown alarm occur, control circuitry will: open the generator circuit breaker, shed low priority load if required, shutdown the engine, sound the alarm horn, display the nature of the failure, and illuminate the (red) Engine Not Available light.

After the trouble has been corrected, the system must be reset manually by rotating the engine selector switch to the STOP/RESET position, and then resetting the generator mounted controller if needed. The alarm light will go out and the switch can then be placed in the desired mode of operation.

Should a pre-alarm condition occur, a lamp will illuminate and the alarm horn will be sounded; but the engine-generator set will not shutdown. When the condition has been corrected, the lamp will go out and the alarm horn will silence automatically. No further resetting of the system is required.

Each generator will be protected by a reverse power relay arranged to trip the generator breaker and shutdown the engine. This relay will protect the generator in the event of a failure of the prime mover when paralleled with other generators.

Should a generator fail to synchronize or its circuit breaker fails to close while operating in the automatic mode, it will be automatically shutdown and locked out of the system after a time delay period, adjustable from 0-300 seconds.

A four-position engine selector switch is provided for each engine-generator set to provide the following modes of operation:

When the selector switch is in the STOP/RESET position, the engine-generator controls are locked out. Whenever the selector switch is placed in the STOP/RESET position while the engine-generator is operating, it will immediately shut down and its circuit breaker will trip. The STOP/RESET position resets the engine starting and failure controls should an engine be shut down due to a malfunction

CAUTION: Engine may be started from local control panel without warning while in* Stop/Reset *position.

An OFF position is provided to allow a normal shutdown with a time delay to allow the engine to cool after operating under load. Whenever the engine selector switch is placed in the OFF position while the engine-generator is operating, the generator circuit breaker will trip, but the engine will continue to operate until the expiration of the time delay setting of the cool-down timer. The engine running light will flash during cool-down operation.

In the AUTO position the engine-generator set is on standby and will start whenever a signal is given from the automatic transfer system or when a system test is performed. When the commercial power returns and the transfer system signals the engine-generator to shut down or when the system test operation is terminated; the circuit breaker will be tripped, and the engine will continue to operate for the cool-down time delay period before shutting down in readiness for the next operation.

When the engine selector switch is placed in the RUN position, the engine will start and come up to speed and voltage. It will continue to operate until the selector switch is rotated to another position. This position is to be used for testing or for manual operation. Should a power failure occur while the engine is operating in the RUN position and the master control switch is in the AUTO position; the engine-generator will automatically synchronize and close its generator circuit breaker to the bus, and will otherwise perform as described under Automatic Operation.

A red Engine Not Available light shall indicate that the engine selector switch is in either the STOP/RESET or the OFF position, or the engine-generator has been shut down due to a malfunction, as described previously.

The status of any DC breaker associated with the individual generator controls is monitored. If a breaker opens, the horn will sound and the DC control voltage failure light will flash indicating a control voltage problem. If any of these breakers open, (with the exception of the governor power), the engine generator may be allowed to continue to operate.

A loss of the engine system voltage results in a lockout the engine controls. If the primary breaker for the generator control fails, the DC control voltage failure light will be solid indicating a control voltage failure. The back-up control voltage provided by the best battery selector will provide power to trip the generator circuit breaker and annunciate the DC control voltage failure.

All fuse holders are DIN rail mounted and equipped with blown fuse indicators to allow easy identification of faulty fuses.

Engine-Generator Control Cubicle Lights

- Revere Power (Red)
- PLC I/O Drop Failure (Red)
- Engine Running (Green)
- Engine Alarm (Amber)
- Breaker Failure (Red)
- Engine Not Available (Red)
- Control Voltage Failure (Red)

1.7.02 Master Control Cubicle Features

An automatic DC control voltage sensor system (Master Control Battery Selector) provides DC control voltage to the switchboard from the best engine starting or station battery available. There is a 24vdc station battery system that provides auxiliary control power to the ESWGR switchboard. The battery system is setup such that should the battery supplying the DC control voltage decrease in voltage below that of another battery input, the sensor will automatically switch the control voltage to the better battery without interruption of the system. The DC control voltage sensor system will ensure a stable DC control voltage supply as long as at least one of the input batteries is available.

A station alarm horn and silencing circuit with indicating lamp is provided to sound an audible should a malfunction occur. Should the alarm be silenced after a malfunction, receipt of another signal shall cause the horn to sound again (Annunciator Ring Back). When the failed circuit is corrected, the alarm horn is automatically reset.

A two-position master control switch is provided on the Master Control Switchboard (MCC) to provide the following modes of operation:

In the AUTO position, the system is in readiness to perform as outlined under Automatic Operation.

In the MANUAL position, the automatic synchronizer is locked out of the system. Receipt of an engine start signal will start all of the standby engine-generators but synchronizing and paralleling procedures must be performed manually. A flashing red Controls Not In Auto light is provided to indicate when this switch is in the MANUAL position.

Voltage and frequency monitoring will be provided for the emergency generator bus. Alarms will be given for Generator Bus Over or Under Voltage and Generator Bus Over Frequency. Generator Bus Under Frequency will result in an alarm and load shedding. All alarms will be latching, manually reset by use of the generator bus alarm reset push button.

Master Control Cubicle Lights

- Load Controls Not In Auto (Amber)
- PLC 1 In Control (Green)
- PLC 2 In Control (Green)
- Spare Light (White)
- Spare Light (Red)
- Controls Not In Auto (Red)
- Operator Interface Alarm (Red)
- Load Shed On (Red)
- PLC Failure (Red)
- Critical Control Voltage Failure (Red)
- ARC Flash Reduction Mode Enabled (Blue)
- Start Signal Present (White)
- Alarm Horn Silenced (Amber)
- Spare Light 14 (Red)

1.7.03 Operator Interface Panel Features

An operator interface panel is provided to access PLC timers and set points, engine sequencing, display system status and alarms, and to enable certain master control functions.

1.7.04 Operator Interface Panel Screen Assignments

- Menu Screen: The menu screen will index all of the screens used on the operator interface panel.
- PLC Comm Status Screen: The PLC comm status screen displays the communication health status for each PLC in the system.
- Legend Screen: The legend screen describes the meaning for each symbol/color on the one-line screen.
- Engine Data Screen: The engine parameters screen displays the engine-generator related information that is obtained from the engine controller.
- Active Alarm Screen: The active alarm screen will display all active alarms in the system. Refer to the alarm Appendix of this document for list of possible alarms.
- Event History Screen: The event history screen will display the last 1000 date and time stamped alarms or events.
- System One-Line Screen: The system one-line screen will display the generator power in kW, the position for each circuit breaker in the system, the status of bus (energized/de-energized), and the system status.
- Engine Screen: The engine screen will display the set points for generator cooldown and fail to sync timers. The operator may adjust these set points from this screen. This screen also displays

the rated kW & available kW for each engine in the system, as well as the no-load test mode switch.

- Generator Demand Screen: The generator demand screen will display the generator sequence, generator demand timer, decrease timer, decrease timer, and increase/decrease set point data. The operator may adjust these set points from this screen as well as enable/disable generator demand operation and initiate a generator increase sequence.
- Master Control Screen: The master control screen soft key control for the following modes: the master selector switch, no load test switch and gen bus alarm reset push button.

* Load Bank Control Screen: From the Load Bank Screen, the operator may select engines for Load Bank Tests and as well for setpoints for the tests. An operator may also select the type of load bank test. (Manual, Concurrent and Consecutive)

- Load Control Screen: The load control screen will display the overload kW set point, overload timer set point, auto/man load control, manual load add, and manual load shed. The operator may adjust these set points from this screen. Also displayed are the following load control parameters: current load step, next priority to add, kW required for the next priority to add, and available kW. An under frequency load shed timer adjustable set point is provided to determine the amount of time between loads shedding during an under frequency condition.
- ATS Priorities Screen: The breaker priorities screen will display the following data for each ATS: priority, expected kW, ATS position, next to add status, and next to shed status. The following parameters are displayed from the load control screen: auto/man load control, manual load add, and manual load shed, current load step, next priority to add, kW required for the next priority to add, and available kW.
- Help Screens: A help screen can be accessed from a button on each set point or control screen that provides a brief explanation of the associated set points and/or controls located on that screen.

1.7.05 Operator Interface Modbus Device Screens

Breaker Protection Communication Screen

The following parameters are available on the Breaker Protection Pop-Up Screen for each breaker (if available in the protection hardware):

- Power Factor
- Frequency
- Voltage (per phase)
- Current (per phase)
- kW
- kVAR
- kVA

Engine Communication Screen

The following parameters are available on the Engine Communication Pop-Up Screen for each engine/generator:

- Operating Hours
- Number of Starts

- Oil Pressure
- Oil Temperature
- Coolant Temperature
- Exhaust Temperature
- Battery Voltage
- Engine RPM
- Power Factor
- Frequency
- Voltage (per phase)
- Current (per phase)
- kW
- kVAR
- kVA

Power Monitor Communication Screen

The following parameters are available on the Power Monitor Pop-Up Screen for the Siemens 9410 Power Monitor on the CCA Switchboard (if available in the power monitor hardware):

- Power Factor
- Frequency
- Voltage (per phase)
- Current (per phase)
- kW
- kVAR
- kVA
- kWH
- Peak kW Demand
- Last Peak kW Date
- Last Peak kW Time
- Current Demand (per phase)
- Current THD (per phase)

1.7.06 Operator Interface Panel Adjustable Parameters

Engine Parameters

- Cool Down Timer (0-3600 sec.)
- Fail to Sync Timer (30-180 sec.)

Load Control

- Priority Set Point (1.00-99.99) (One per ATS)
- Expected kW Set Point (1-9999kW) (One per ATS)

- Load Add Timer - Below Engine Count (0.5-5 sec.)
- Load Add Timer - Equal to Engine Count (0.5-10 sec.)
- Load Add Timer - Above Engine Count (0.5-300 sec.)
- Overload Set Point (90-110%)
- Over Load Shed Timer (0.5-30 sec. inverse)
- Under Frequency Shed Timer (0-10 sec.)

Load Bank Test Mode

- Engine Test Duration Timer (1-480 min.)
- Load Bank Cool Down Timer (1-900 sec.)

Gen Demand (kW Based Spinning Reserve)

- Spinning Reserve Enable Timer (0-3600 sec.)
- Minimum Spare Generator Capacity Set Point (300-4000kW)
- Increase Generator Capacity Timer (1-120 sec.)
- Decrease to Increase Deadband (100-750kW)
- Decrease Generator Capacity Timer (10-300 sec.)
- Engine Sequence Set Point (1-2) (One per engine)

1.7.07 Operator Interface Panel Function Keys

- Master Control (Manual/Auto Switch Function)
- Gen Bus Alarm Reset (Push Button Function)
- Generator No-Load Test (On/Off Switch Function)
- Generator Demand (On/Off Switch Function)
- Increase Capacity (Push Button Function)
- Master Load Test (On/Off Switch Function)
- Auto Load Controls (On/Bypass Switch Function)
- Load Add (Push Button Function)
- Load Shed (Push Button Function)
- ATS Load Test Enable (Push Button Function) (One per ATS)
- ATS Load Test (Normal/Test Switch Function)
- Load Bank Test (Off/Test Switch Function)
- Load Bank Test Enable (Off/Test Switch Function) (One per generator)
- Load Bank Manual Test
- Load Bank Concurrent Test
- Load Bank Consecutive Test

1.8 Customer Interface

Network Diagram

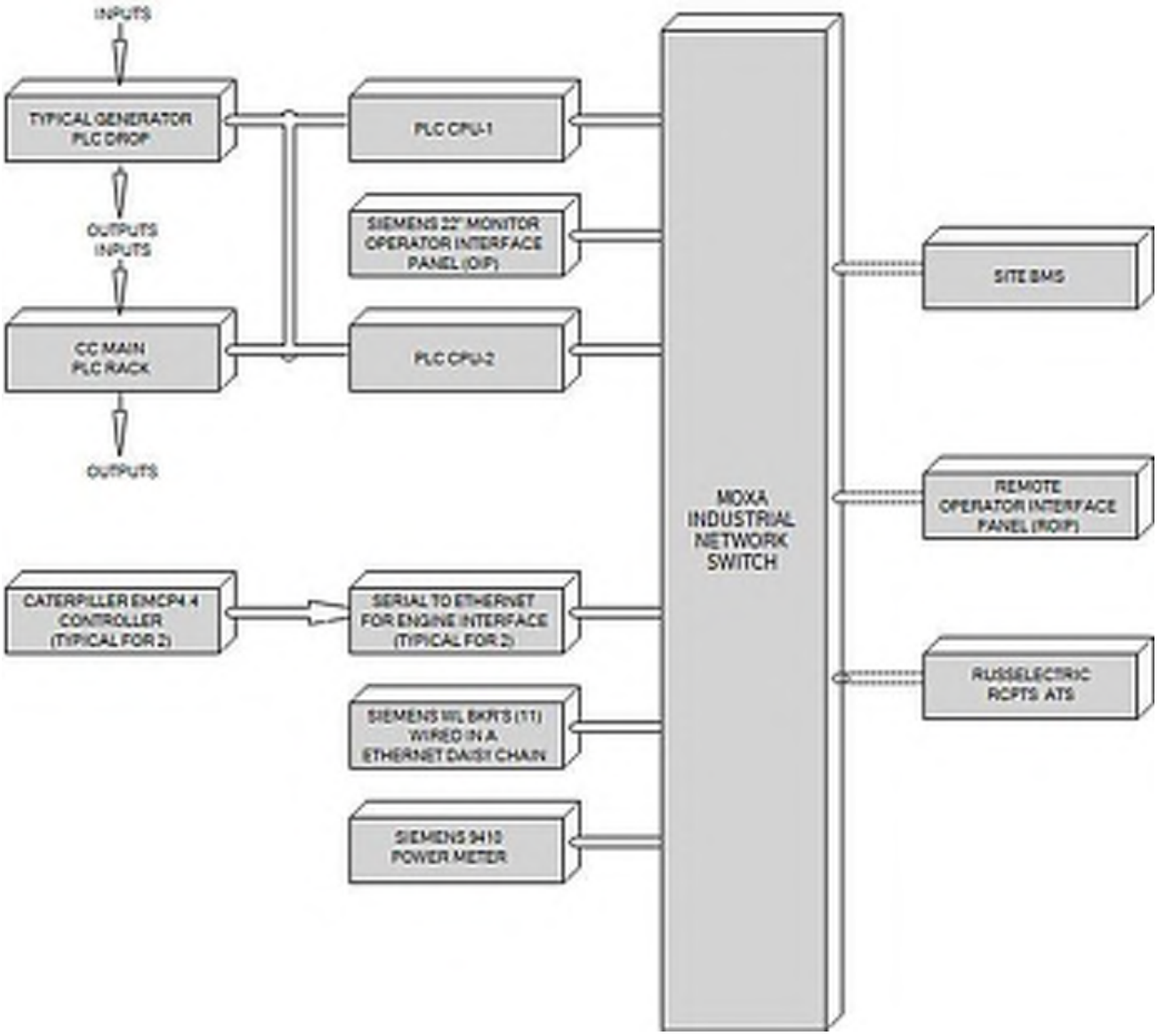

Control Diagram

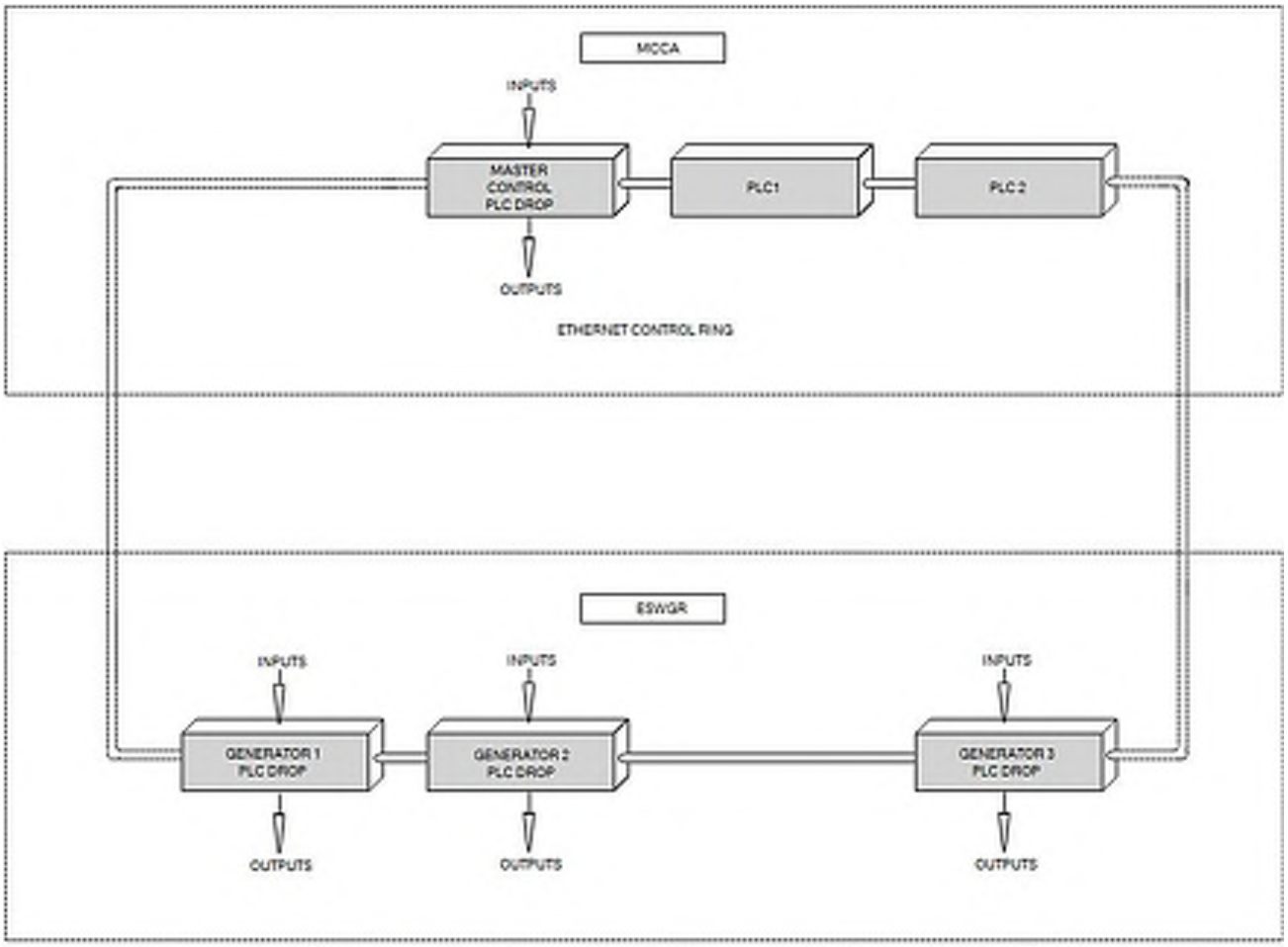

NOTE: ALL CONNECTIONS SHOWN TO BE MADE WITH CAT5E ETHERNET CABLE UNLESS NOTED OTHERWISE.

1.8.01 BMS Interface

A Modbus TCP connection is provided for the following equipment for connection to a BMS system:

- System PLC's
- Engine controller(s)
- Automatic Transfer Switch (ATS-2)
- Siemens 9410 Power Meter

1.9 Appendix

1.9.01 Networked Device Appendix

Network connections available at switchboard EMDP1A (Subnet Mask: 255.255.0.0)

Name	Location	Device	IP Address	Serial Address	Device Notes
PLC1	MCC SWBD.	GE RX3i	192.168.1.31		Main
PLC2	MCC SWBD.	GE RX3i	192.168.1.30		Backup
34OIP	MCC SWBD.	Operator Interface Panel	192.168.1.100		
Engine 1	ESWGR C1	Moxa MB3170	192.168.1.1		CATERPILLAR EMCP4.4
Engine 2	ESWGR C2	Moxa MB3170	192.168.1.2		CATERPILLAR EMCP4.4
Engine 3	ESWGR C3	Moxa MB3170	192.168.1.3		FUTURE ENGINE 3
52G	ESWGR C1	Siemens WL Breaker ETU776	192.168.1.4		GENERATOR 1 BREAKER
52G	ESWGR C2	Siemens WL Breaker ETU776	192.168.1.5		GENERATOR 2 BREAKER
52A	ESWGR D1	Siemens WL Breaker ETU776	192.168.1.6		DISTRIBUTION BREAKER
52B	ESWGR D1	Siemens WL Breaker ETU776	192.168.1.7		DISTRIBUTION BREAKER

Name	Location	Device	IP Address	Serial Address	Device Notes
52C	ESWGR D1	Siemens WL Breaker ETU776	192.168.1.8		DISTRIBUTION BREAKER
52D	ESWGR D1	Siemens WL Breaker ETU776	192.168.1.9		DISTRIBUTION BREAKER
52A	ESWGR D2	Siemens WL Breaker ETU776	192.168.1.10		DISTRIBUTION BREAKER
52B	ESWGR D2	Siemens WL Breaker ETU776	192.168.1.11		DISTRIBUTION BREAKER
52C	ESWGR D2	Siemens WL Breaker ETU776	192.168.1.12		DISTRIBUTION BREAKER
52D	ESWGR D2	Siemens WL Breaker ETU776	192.168.1.13		DISTRIBUTION BREAKER
52G	ESWGR C3	Siemens WL Breaker ETU776	192.168.1.14		FUTURE GENERATOR 3 BREAKER

1.9.02 ATS Identification Appendix

ATS #	ATS Label ID	Load Priority	Location	Estimated KW Load
ATS-01	ATS-10 (RTS30-ABLC10004AMF1-RPTCS)			
ATS-02	108 ATS-3 (SO# 35203-P-1)			
ATS-03	108 ATS-4 (SO# 35203-P-1)			
ATS-04	108 ATS-5 (SO# 35203-P-2)			
ATS-05	B031 FirePump ATS			
ATS-06	C125 ATS-6 (SO# 35203-P-3)			
ATS-07	C125 ATS-7 (SO# 35203-P-3)			
ATS-08	C125 ATS-8 (SO# 35203-P-6			
ATS-09	C125 ATS-9			
ATS-10	C125 Fire Pump ATS			

1.9.03 Alarm Appendix

The following alarms are displayed on the operator interface panel alarm screen.

- PLC Stopped - PLC 1
- Genius Comm. Failure - PLC 1
- PLC Stopped - PLC 2
- Genius Comm. Failure - PLC 2

- PLC Stopped - PLC 1
- Genius Comm. Failure - I/O Rack (typical)
- OIP - Comm. Failure
- Overload
- PT Breaker Open (typical)
- Overvoltage - Generator Bus
- Underfrequency - Generator Bus
- Breaker - Lockout (typical)
- Breaker - Fail to Trip (typical)
- Low Water Temp. - Engine 1 (typical)
- Not in Auto - Engine 1 (typical)
- Low Oil Pressure - Engine 1 (typical)
- Overspeed - Engine 1 (typical)
- Fail to Synchronize - Engine 1 (typical)
- Day Tank Low Fuel - Engine 1 (typical)
- Battery Charger Alarm - Engine 1 (typical)
- Control Voltage Failure - Engine 1 (typical)
- PLC Stopped - PLC 2
- I/O Module Failure - (typical)
- Load Shed On
- Control Voltage Failure (typical)
- Overfrequency - Generator Bus
- Undervoltage - Generator Bus
- Low Fuel Level - Main Tank
- Breaker - Fail to Close (typical)
- Breaker - External Trip (typical)
- Approach Low Oil Pressure - Engine 1 (typical)
- High Water Temp. - Engine 1 (typical)
- Engine Overcrank - Engine 1 (typical)
- Approach High Water Temp. - Engine 1 (typical)
- Day Tank High Fuel - Engine 1 (typical)
- Day Tank Rupture - Engine 1 (typical)
- Emergency Stop - Engine 1 (typical)
-

Bill of Material ESWGR

3009518009 UK GOOD SAMARITANS HOSPITAL, Order #3009518009

Bill of Material, Sheets 1-5

The following example includes a key to describe the information contained in the bill of material.

All components listed in the bill of materials are in alphabetical order by manufacturer.

Item	Qty.	Catalog No.	Description Swbd+Cubicle-Device	Part No.	Manufacturer
1	1	S201U-K30		52C0280101	ABB

CIRCUIT BREAKER, S200U MINIATURE, 1 POLE, UL489 "C'", 30.0 AMP RATING, "K-CURVE".

GPS+C1-72EB

Key:

Switchboard Identification: **GPS**
Cubicle location: **C1**
Component or device identification: **72EB**

NOTE: The component device I.D. is exclusive within a cubicle location, and is typically prefixed by its associated ANSI standard device function number.

Item	Qty.	Catalog No.	Description Swbd+Cubicle-Device	Part No.	Manufacturer
1	3	BE1-32R-A2EE1RA0N1F		69R0061019	BASLER

DIR. OVERPOWER REL, 32R, 1 PHASE L-N VOLTAGE, 120VAC SENSING,(1) NO OUTPUT RELAY, DEFINITE TIME, 24VDC PWR SUPPLY, ONE INTERNALLY OPER. TARGET, 1 NO AUX RELAY, SEMI-FLUSH MOUNTING

ESWGR+C1-32 ***ESWGR+C2-32*** ***ESWGR+C3-32***

2	3	007-05FA-LSSU-C7		69A0022219	CROMPTON

AMMETER, AC, TYPE: 007, MOVEMENT: 5A, SCALE: 0-1200A, 50/60 HERTZ.

ESWGR+C1-95A ***ESWGR+C2-95A*** ***ESWGR+C3-95A***

3	3	007-05GA-RSSJ-C7		69V0010918	CROMPTON

VOLTMETER, TYPE: 007, RATING: 250V, SCALE: 0-600V, TRANSFORMER RATED, 50/60 HZ.

ESWGR+C1-95V ***ESWGR+C2-95V*** ***ESWGR+C3-95V***

4	3	PER DESC		69W0031504	CROMPTON

WATTMETER, TYPE: 007, MOVEMENT: 0-0.93 mADC, SCALE: 0-800 KW, TITLED: "AC KILOWATTS".

ESWGR+C1-95W ***ESWGR+C2-95W*** ***ESWGR+C3-95W***

5	3	10250T2		69C0250005	CUTLER HAMMER

CONTACT BLOCK, 2 NO

ESWGR+C1-43LT ***ESWGR+C2-43LT*** ***ESWGR+C3-43LT***

6	3	10250TM36		69L0070001	CUTLER HAMMER

LEGEND PLATE, BLANK, BLACK, STANDARD SIZE.

ESWGR+C1-43LT ***ESWGR+C2-43LT*** ***ESWGR+C3-43LT***

7	3	10250T103		69O0010003	CUTLER HAMMER

OPERATOR, STANDARD PUSHBUTTON, GREEN

ESWGR+C1-43MS ***ESWGR+C2-43MS*** ***ESWGR+C3-43MS***

8	3	10250T108		69O0010007	CUTLER HAMMER

OPERATOR, STANDARD PUSHBUTTON, BLUE

ESWGR+C1-43LT ***ESWGR+C2-43LT*** ***ESWGR+C3-43LT***

9	3	10250T3043	69O0010036	CUTLER HAMMER

OPERATOR, LEVER SWITCH (BLACK) - 3 POSITION SPRING RETURN FROM RIGHT AND LEFT - VERTICAL MOUNTING, NEMA 4-13

ESWGR+C1-43VA ***ESWGR+C2-43VA*** ***ESWGR+C3-43VA***

10	3	2404C	69S0120002	ELECTRO SWITCH

SWITCH, VOLTMETER TRANSFER, NAMEPLATE MARKED: OFF,1-2, 2-3,3-1

ESWGR+C1-43V ***ESWGR+C2-43V*** ***ESWGR+C3-43V***

11	3	2410C	69S0120007	ELECTRO SWITCH

SWITCH, AMMETER TRANSFER NAMEPLATE MARKED:OFF, 1, 2, 3

ESWGR+C1-43A ***ESWGR+C2-43A*** ***ESWGR+C3-43A***

12	3	2424E	69S0120011	ELECTRO SWITCH

SWITCH, SYNCHRONIZING SELECTOR SWITCH WITH KEYED HANDLE REMOVEABLE IN OFF POSITION NAMEPLATE MARKED: OFF, ON

ESWGR+C1-43S ***ESWGR+C2-43S*** ***ESWGR+C3-43S***

13	2	24202PN	69S0120016	ELECTRO SWITCH

SWITCH, FREQUENCY METER, KEYED HANDLE REMOVABLE IN "OFF" POSITION-NAMEPLATE MARKED: BUS, OFF, GEN

ESWGR+C1-43F ***ESWGR+C2-43F***

14	1	24202PN	69S0120067	ELECTRO SWITCH

SWITCH, FREQUENCY METER, KEYED-HANDLE, REMOVABLE IN "OFF" POSITION - NAMEPLATE MARKED: BUS A, OFF, BUS B.

ESWGR+C3-43F

15	3	24903LG	69S0120196	ELECTRO SWITCH

SWITCH, ENGINE SELECTOR - NAMEPLATE MARKED: STOP/RESET, OFF, AUTO, RUN

ESWGR+C1-43E ***ESWGR+C2-43E*** ***ESWGR+C3-43E***

16	3	SLC40N-0103-DHT2FB	69L0063003	IDEC

LIGHT DISPLAY, SLC-40 SERIES, TYPE F, LED (WITH CHECK TERMINALS), 24VDC, (1 ROW X 3 COLUMNS), BLACK FRAME, CLEAR LENS. INCLUDE 4 #SLC-JP42 JUMPERS.

ESWGR+C1-LB2 ***ESWGR+C2-LB2*** ***ESWGR+C3-LB2***

17	3	SLC40N-0107-DHT2FB	69L0063007	IDEC

LIGHT DISPLAY, SLC-40 SERIES, TYPE F, LED (WITH CHECK TERMINALS), 24VDC, (1 ROW X 7 COLUMNS), BLACK FRAME, CLEAR LENS. INCLUDE 12 #SLC-JP42 JUMPERS.

ESWGR+C1-LB1 ***ESWGR+C2-LB1*** ***ESWGR+C3-LB1***

18	9	120-122	69C0140021	ITI

CURRENT TRANSFORMER, MODEL 120, RATIO:1200/5

ESWGR+C1-CTC ***ESWGR+C1-CTA*** ***ESWGR+C1-CTB***

ESWGR+C2-CTA ***ESWGR+C2-CTB*** ***ESWGR+C2-CTC***

ESWGR+C3-CTB ***ESWGR+C3-CTC*** ***ESWGR+C3-CTA***

19	4	GS2308T6XXXXNXN	69C0350035	SIEMENS

CRADLE, WL UL1066 3 POLE, CL S, 65KAIC@480VAC, 800AFR, FS2, SPR. CLMP. TERM., 6 CONN. FC TOC, NO LOCK, NO SHUTTERS, NO ARC CH. CVR., NO DOOR LCK OR MECH. INT., CONN POS. MOC, STD. REAR CONN.

ESWGR+D1-52A ***ESWGR+D1-52B*** ***ESWGR+D2-52B***

ESWGR+D2-52A

20	7	GS2316T6XXXXNXN	69C0350044	SIEMENS

~CRADLE, WL UL1066 3 POLE, CL S, 65KAIC@480VAC, 1600AFR, FS2, SPR. CLMP. TERM., 6 CONN. FC TOC, NO LOCK, NO SHUTTERS, NO ARC CH. CVR., NO DOOR LCK OR MECH. INT., CONN POS. MOC, STD. REAR CONN.

ESWGR+C1-52G ***ESWGR+C2-52G*** ***ESWGR+C3-52G***

ESWGR+D1-52D ***ESWGR+D1-52C*** ***ESWGR+D2-52D***

ESWGR+D2-52C

21	4	S2A308NWGAXXWEC	69P0019567	SIEMENS

POWER CIRCUIT BREAKER, WL UL1066 3P, CL. S, 65KAIC@508VAC, 800AFR, FS2, NO FUSE, D.O., 800ARP, ETU776 LSI GFA, BA FRM-C 4A/4B AUX, 24VDC ST, NO UVR/2ST, NO SC, 120VAC/125VDC CC MODBUS, W/HDLE LK, MAN. TR. RST.

ESWGR+D1-52A ***ESWGR+D1-52B*** ***ESWGR+D2-52B***

ESWGR+D2-52A

22	6	S2A316QWGAXXWEC	69P0019568	SIEMENS

POWER CIRCUIT BREAKER, WL UL1066 3P, CL. S, 65KAIC@508VAC, 1600AFR, FS2, NO FUSE, D.O., 1200ARP, ETU776 LSI GFA, BA FRM-C 4A/4B AUX, 24VDC ST, NO UVR/2ST, NO SC, 120VAC/125VDC CC MODBUS, W/HDLE LK, MAN. TR. RST.

ESWGR+C1-52G ***ESWGR+C2-52G*** ***ESWGR+C3-52G***

ESWGR+D1-52C ***ESWGR+D1-52D*** ***ESWGR+D2-52D***

23	1	S2A316PWGAXXWEC	69P0019569	SIEMENS

POWER CIRCUIT BREAKER, WL UL1066 3P, CL. S, 65KAIC@508VAC, 1600AFR, FS2, NO FUSE, D.O., 1000ARP, ETU776 LSI GFA, BA FRM-C 4A/4B AUX, 24VDC ST, NO UVR/2ST, NO SC, 120VAC/125VDC CC MODBUS, W/HDLE LK, MAN. TR. RST.

ESWGR+D2-52C

24	11	WLDSF	WLDSF	SIEMENS

ACCESSORIES, EXTERNAL DOOR SEALING FRAMES, FOR WL CIRCUIT BREAKERS.

ESWGR+C1-52G	***ESWGR+C2-52G***	***ESWGR+C3-52G***
ESWGR+D1-52B	***ESWGR+D1-52D***	***ESWGR+D1-52C***
ESWGR+D1-52A	***ESWGR+D2-52B***	***ESWGR+D2-52D***
ESWGR+D2-52A	***ESWGR+D2-52C***	

25	11	WLNCT2	WLNCT2	SIEMENS

ACCESSORIES, EXTERNAL NEUTRAL SENSOR FOR 4-WIRE GROUND FAULT, FRAME SIZE II, NO ADAPTERS INCLUDED FOR CONNECTION, FOR WL CIRCUIT BREAKERS.

ESWGR+C1-52G	***ESWGR+C2-52G***	***ESWGR+C3-52G***
ESWGR+D1-52B	***ESWGR+D1-52D***	***ESWGR+D1-52A***
ESWGR+D1-52C	***ESWGR+D2-52B***	***ESWGR+D2-52D***
ESWGR+D2-52A	***ESWGR+D2-52C***	

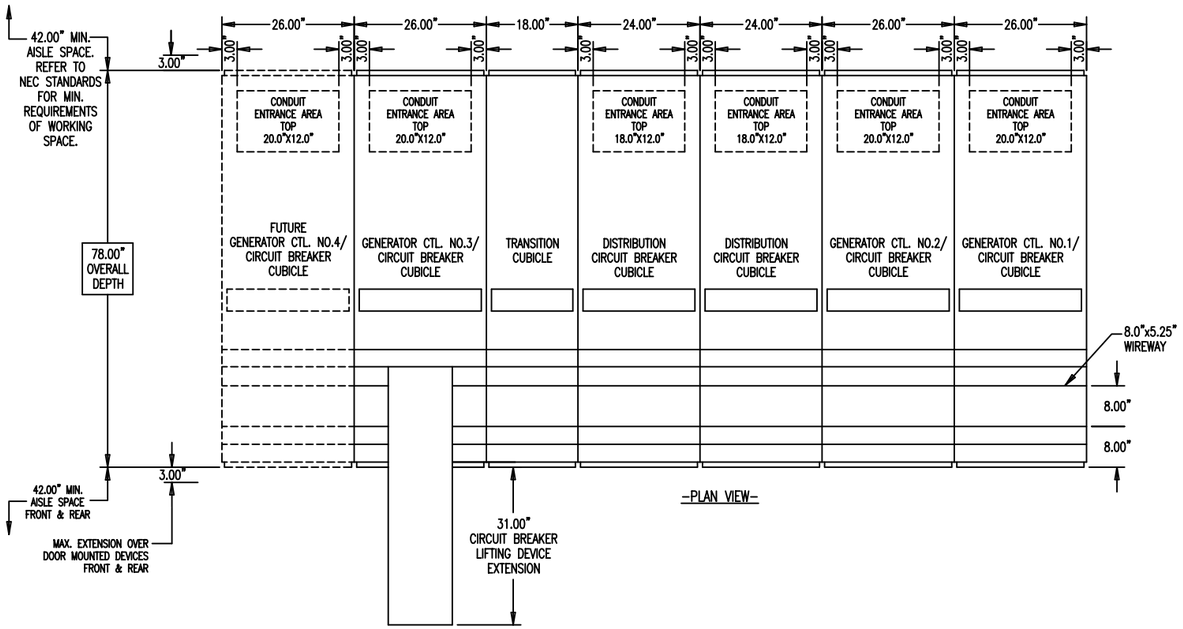

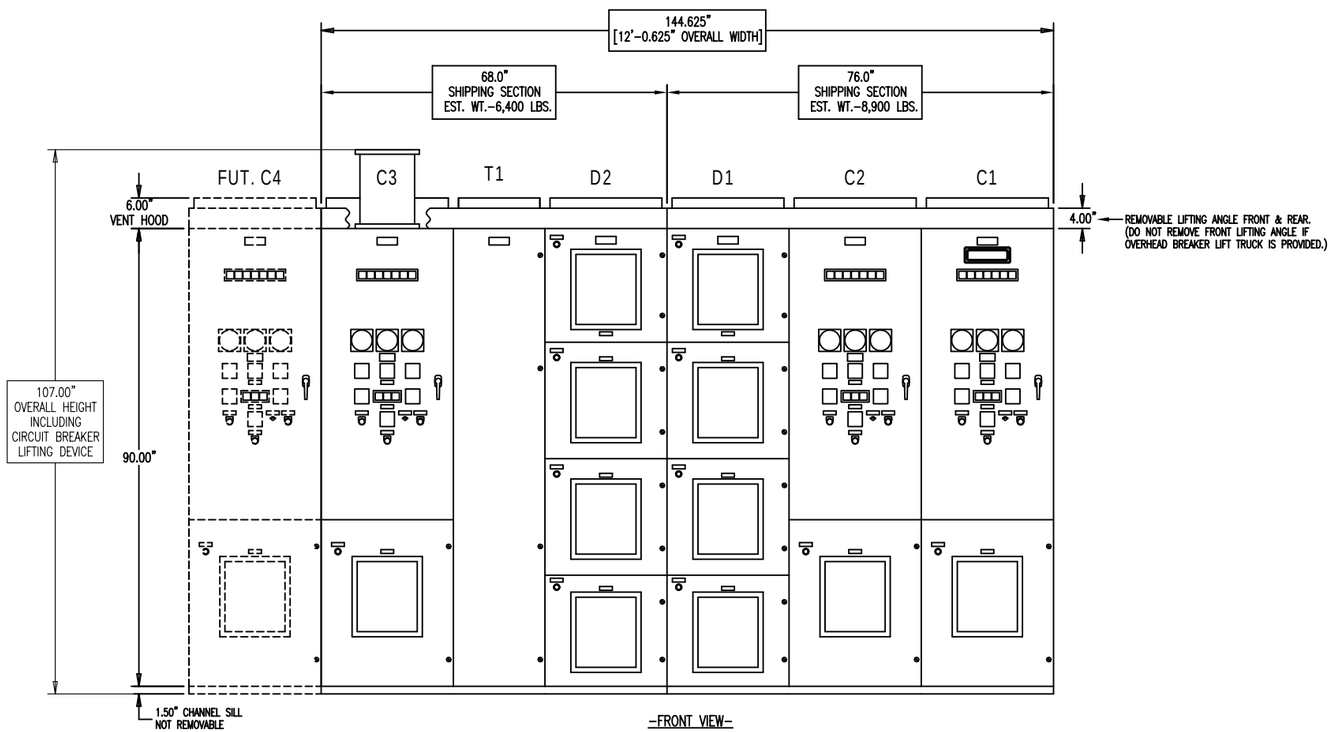

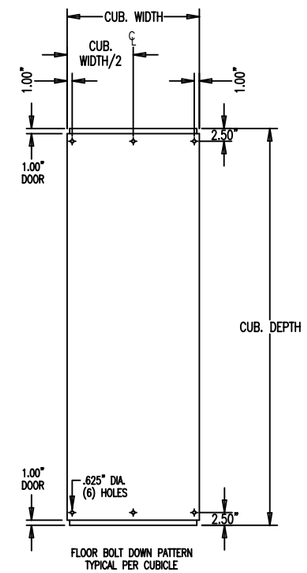

NOTES:

1. ENCLOSURES TO BE FABRICATED FROM FORMED CHANNEL FRAMEWORK AND CODE GAUGE SHEET STEEL. ALL STEEL PARTS SHALL BE PREPARED FOR PAINTING BY A FIVE STEP CLEANING, PHOSPHATIZING AND SEALING PROCESS. THE PARTS SHALL THEN BE PAINTED ANSI NO. 61 GRAY, UTILIZING POLYESTER POWDER COATING APPLIED BY THE ELECTROSTATIC METHOD AND CURED IN A BAKING OVEN. THIS FINISH IS SUITABLE FOR OUTDOOR, AS WELL AS INDOOR APPLICATIONS.
2. ALL LUGS TO BE MECHANICAL AND COMPRESSION TYPE SUITABLE FOR CU/AL CABLE.
3. SYSTEM VOLTAGE: 277/480V, 3Ø, 4W, 60HZ.
4. ALL BUS TO BE SILVER PLATED COPPER WITH CARRYING CAPACITY BASED ON NEMA AND U/L STANDARDS.
5. THE CALIBRATION AND SETTINGS OF ALL PROTECTIVE DEVICES MUST BE DETERMINED BY A SHORT CIRCUIT AND COORDINATION STUDY PROVIDED BY OTHERS.
6. CABLES MUST BE LASHED PER TABLE 1 ON ONE LINE DIAGRAM. LASHING IS NOT THE RESPONSIBILITY OF RUSSELECTRIC.
7. SPECIAL CONSIDERATION MUST BE TAKEN WHEN PREPARING THE FOUNDATION. FOLLOW ALL APPLICABLE LOCAL AND INTERNATIONAL BUILDING CODES.
8. WHEN ANCHORING FOR A SEISMIC LOCATION, CONSIDERATION MUST BE GIVEN TO THE DESIGN OF THE PAD OR FOUNDATION. MINIMUM CONCRETE THICKNESS AND PSI, MINIMUM ANCHOR EDGE DISTANCE, CENTERLINE SPACING, AND EFFECTIVE EMBEDMENT ARE ALL FACTORS THAT WILL INFLUENCE THE ANCHORING.
   A. REFER TO THE PROJECT SPECIFIC SEISMIC STUDY DONE BY A CERTIFIED ENGINEER FOR PROPER ANCHOR DETAIL INFORMATION.
   B. USE AN ANCHOR THAT MEETS OR EXCEEDS THE STRENGTH OF A 1/2-INCH GRADE 5 BOLT WITH 1/2-INCH USS LARGE FLAT WASHER.

C1,C2,C3	2000A	508V	3Ø 4W	60HZ	65KA	65KA	2.2KV
D1,D2	5000A	508V	3Ø 4W	60HZ	65KA	65KA	2.2KV
SECTION	AC AMPERES	MAX VOLTAGE	SYSTEM	FREQ.	SHORT TIME (RMS)	SHORT CIRCUIT (RMS)	POWER FREQUENCY WITHSTAND (RMS)
SECTION RATINGS							
MAIN BUS	6000A	508V	3Ø 4W	60HZ	100KA	100KA	2.2KV
	AC AMPERES	MAX VOLTAGE	SYSTEM	FREQ.	SHORT TIME (RMS)	SHORT CIRCUIT (RMS)	POWER FREQUENCY WITHSTAND (RMS)
SYSTEM RATINGS							

UNLESS NOTED (*) SWITCHGEAR SHALL BEAR THE E82916 (1558) U/L LABEL FOR LOW VOLTAGE POWER CIRCUIT BREAKER SWITCHGEAR SECTION, METAL-ENCLOSED, RE-100 CONSTRUCTION LISTED IN THE TABLE ABOVE.

ADDITIONAL OR REPLACEMENT DEVICES SHALL BE OF THE SAME MANUFACTURER, TYPE DESIGNATION, AND EQUAL OR GREATER THAN THE REPLACED DEVICE OR SECTION.
* = E63749 (891) U/L LABEL

REVISION 0	REFERENCE DOCUMENTS		INSTALLATION	ITEM #21000			TITLE	Russelectric A Siemens Business	
5/23/22 JF	NO.	TITLE	UK HEALTHCARE - GOOD SAMARITANS LEXINGTON, KENTUCKY	DFTP.	DDD	05/12/22	PHYSICAL DETAIL FRONT AND PLAN VIEW AND CONSTRUCTION NOTES	DWG. NO. 3009518009-P-ESWGR	0
SUBMITTAL	3009518009-S-ESWGR	SCHEMATIC DIAGRAMS		CHKD.				SHEET NO. 01 CON'T ON 02	REV.
	3009518009-W-ESWGR	WIRING DIAGRAMS		APPD.					
	3009518009-I	INTERCONNECTS							

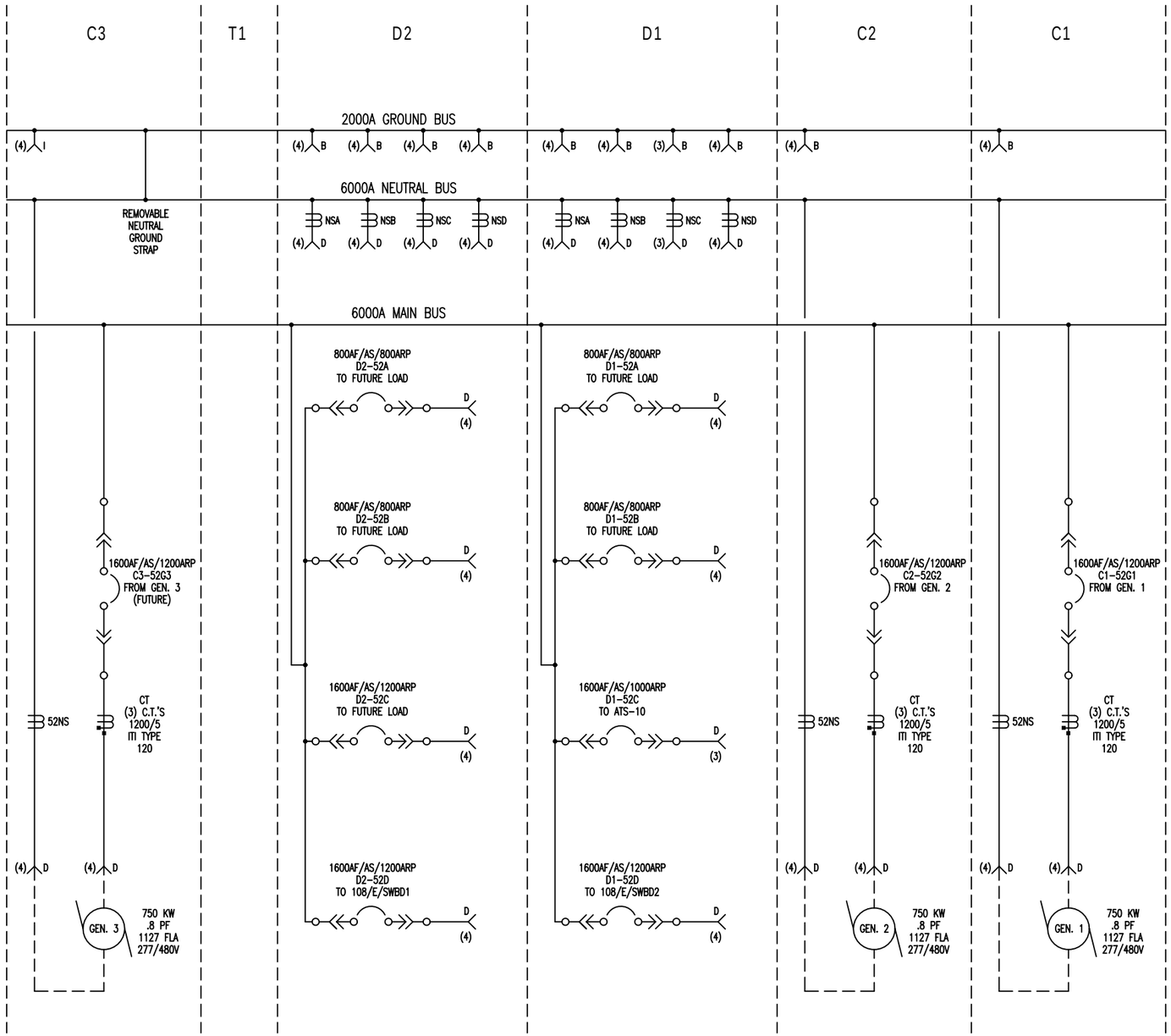

MECH. LUG SCHEDULE	
TYPE	SIZE
A	#14-1/0
B	#6-250 KCMIL
C	#6-350 KCMIL
D	#4-600 KCMIL
E	3/0-800 KCMIL CU 250-800 KCMIL AL

TABLE 1		
CONDUCTOR RESTRAIN REQUIREMENTS		
SUPPLY CABLES	100kA	200kA
UP TO 2000A	NO	YES
3200A	NO	YES
4000A	NO	YES
5000A	NO	YES
LOAD CABLES	100kA	200kA
UP TO 800A	YES	YES
1600A	YES	YES
2000A	NO	YES
3200A	NO	YES
4000A	NO	YES
5000A	NO	YES

NOTES:

1) ALL CIRCUIT BREAKERS ARE SIEMENS WL ELECTRICALLY OPERATED (E.O.) 65KA WITH 120VAC SC/CC AND 24VDC ST.

2) ALL CIRCUIT BREAKERS IN ESWGR SWBD. ARE LSIA TRIP

3) ALL CIRCUIT BREAKERS ARE PROVIDED WITH AN ARC FLASH REDUCTION SWITCH

NOTE: THE CALIBRATION AND SETTINGS OF ALL PROTECTIVE DEVICES MUST BE DETERMINED BY A SHORT CIRCUIT AND COORDINATION STUDY PROVIDED BY OTHERS.

INSTALLATION				TITLE	Russelectric A Siemens Business	
UK HEALTHCARE - GOOD SAMARITANS LEXINGTON, KENTUCKY	DFTP.	DDD	05/12/22	ONE LINE DIAGRAM	DWG. NO. 3009518009-P-ESWGR	0
	CHKD.				SHEET NO. 02 CON'T ON 03	REV.
	APPD.					

DEVICE	EXTERIOR DEVICES	MANUFACTURER
32R	REVERSE POWER RELAY	BASLER
95A	0-1200A SCALE AMMETER	CROMPTON
95W	0- 800KW SCALE WATTMETER,0.93 MA MVMNT.	CROMPTON
95V	0-600V SCALE VOLTMETER 250V MOVEMENT	CROMPTON
43LT	LAMP TEST PUSHBUTTON	CUTLER HAMMER
43VA	VOLTAGE ADJUST SWITCH	CUTLER HAMMER
43MS	MANUAL SYNC. ENABLE PUSHBUTTON	CUTLER HAMMER
43V	4W VOLTMETER SWITCH	ELECTRO SWITCH
43A	3Ø AMMETER SWITCH	ELECTRO SWITCH
43E	ENGINE SELECTOR SWITCH	ELECTRO SWITCH
43S	SYNCHRONIZING SWITCH	ELECTRO SWITCH
43F	FREQUENCY METER SWITCH	ELECTRO SWITCH
43C	CIRCUIT BREAKER SWITCH	ELECTRO SWITCH
LB1	1 X 7 LED ANNUNCIATOR	IDEC
LB2	1 X 3 LED ANNUNCIATOR	IDEC
NP	RUSSELECTRIC NAMEPLATE	RUSSELECTRIC
43ER	ILLUMINATED ENERGY REDUCTION SWITCH	SIEMENS
70S	SPEED ADJUST POT	SPECTROL

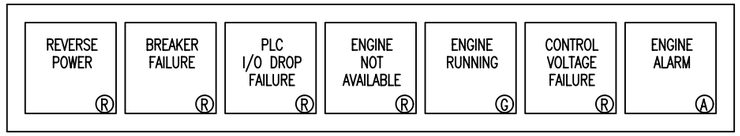

LB1

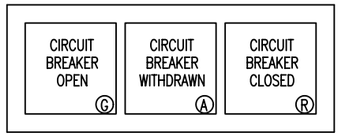

LB2

NOTES:
1. DETAILS SHOWN ARE FOR BACKLIT ANNUNCIATION BOX. WINDOWS ENGRAVED AS SHOWN. LETTERS INDICATE LED COLOR:
   A=AMBER G=GREEN
   R=RED W=WHITE
2. ALL LETTERING TO BE APPROX. 3/16, BLACK LETTERS ENGRAVED ON WHITE BACKGROUND.

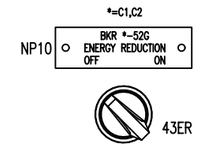

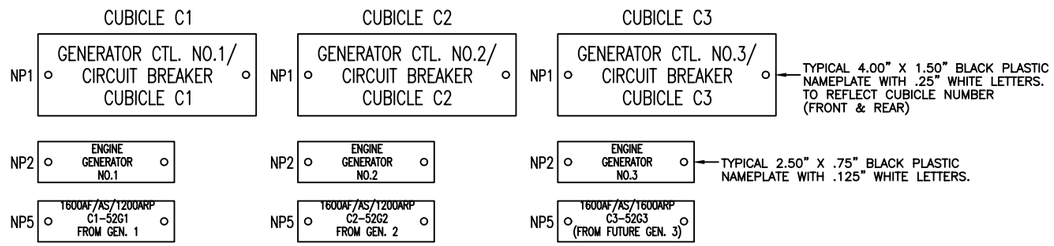

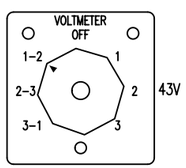

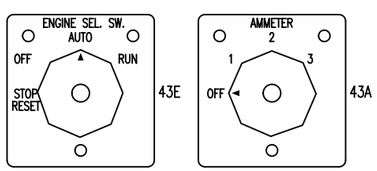

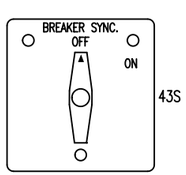

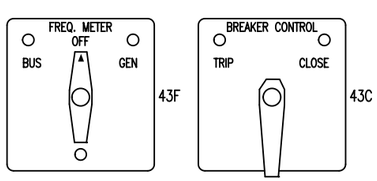

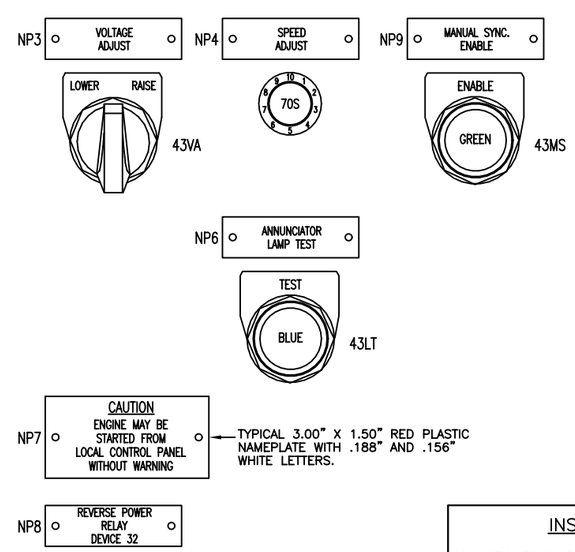

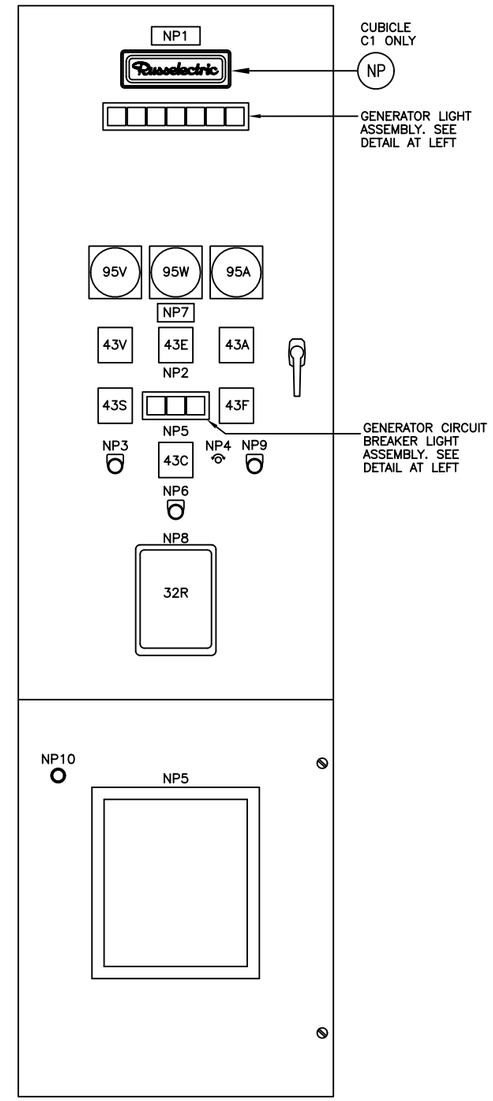

-FRONT VIEW-
GENERATOR CONTROL/ CIRCUIT BREAKER CUBICLES
(C1,C2,C3)

INSTALLATION				TITLE	Russelectric A Siemens Business	
UK HEALTHCARE - GOOD SAMARITANS LEXINGTON, KENTUCKY	DFTP.	DDD	05/12/22	PHYSICAL DETAILS GENERATOR CTL./ CIRCUIT BREAKER CUBICLES (C1,C2,C3)	DWG. NO. 3009518009-P-ESWGR	0
	CHKD.				SHEET NO. 03 CON'T ON 04	REV.
	APPD.					

DEVICE	EXTERIOR DEVICES	MANUFACTURER
43ER	ILLUMINATED ENERGY REDUCTION SWITCH	SIEMENS

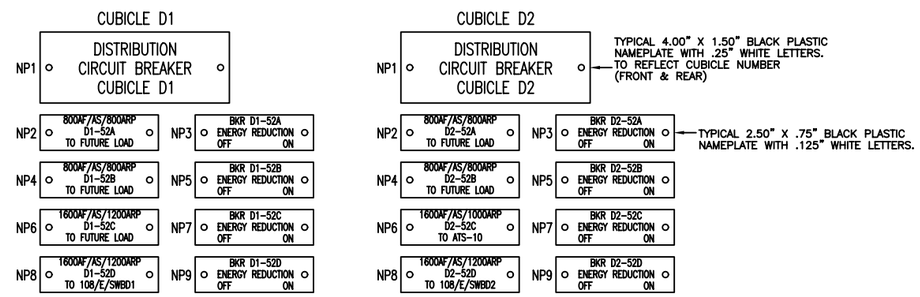

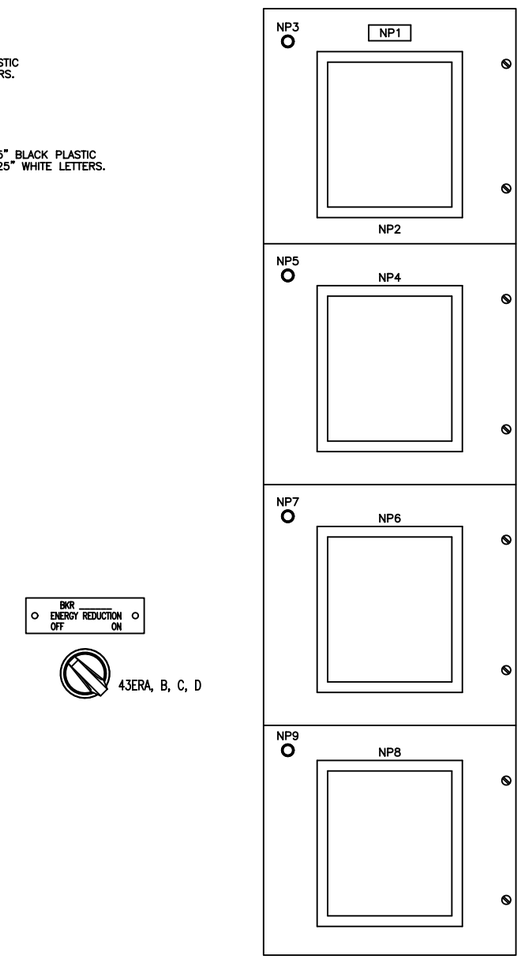

–FRONT VIEW–
DISTRIBUTION CIRCUIT BREAKER CUBICLES
(D1,D2)

INSTALLATION				TITLE	Russelectric A Siemens Business	
UK HEALTHCARE - GOOD SAMARITANS LEXINGTON, KENTUCKY	DFTP.	DDD	05/12/22	PHYSICAL DETAILS DISTRIBUTION CIRCUIT BREAKER CUBICLES (D1,D2)	DWG. NO. 3009518009-P-ESWGR	0
	CHKD.				SHEET NO. 04 CON'T ON 05	REV.
	APPD.					

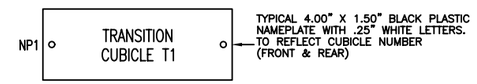

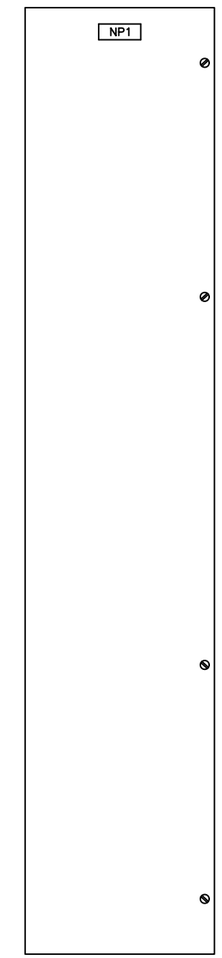

–FRONT VIEW–
TRANSITION CUBICLE
(T1)

INSTALLATION				TITLE	Russelectric A Siemens Business	
UK HEALTHCARE - GOOD SAMARITANS LEXINGTON, KENTUCKY	DFTP.	DDD	05/12/22	PHYSICAL DETAILS TRANSITION CUBICLE (T1)	DWG. NO. 3009518009-P-ESWGR	0
	CHKD.					
	APPD.				SHEET NO. 05 CON'T ON --	REV.

Bill of Material MCC

3009518009 UK GOOD SAMARITANS HOSPITAL, Order #3009518009

Bill of Material, Sheets 1-3

The following example includes a key to describe the information contained in the bill of material.

All components listed in the bill of materials are in alphabetical order by manufacturer.

Item	Qty.	Catalog No.	Description Swbd+Cubicle-Device	Part No.	Manufacturer
1	1	S201U-K30		52C0280101	ABB

CIRCUIT BREAKER, S200U MINIATURE, 1 POLE, UL489 "C'", 30.0 AMP RATING, "K-CURVE".

GPS+C1-72EB

Key:

Switchboard Identification: **GPS**
Cubicle location: **C1**
Component or device identification: **72EB**

NOTE: The component device I.D. is exclusive within a cubicle location, and is typically prefixed by its associated ANSI standard device function number.

Item	Qty.	Catalog No.	Description Swbd+Cubicle-Device	Part No.	Manufacturer
1	1	007-41LA-PNAN-AN-SN		69F0080005	CROMPTON
	FREQUENCY METER, TYPE: 007, CENTER FREQUENCY: 60HZ, ACCURACY: +/- 0.15HZ, SCALE: 55-65HZ, VOLTAGE: 120V.				
	MCC+CCA-95F				
2	1	007-146A-PRAE-C6		69S0130005	CROMPTON
	SYNCHROSCOPE, 120V 60HZ, TYPE 007, SCALE: SLOW-FAST				
	MCC+CCA-95S				
3	1	007-05GA-RSSJ-C7		69V0010918	CROMPTON
	VOLTMETER, TYPE: 007, RATING: 250V, SCALE: 0-600V, TRANSFORMER RATED, 50/60 HZ.				
	MCC+CCA-95V				
4	2	10250T1		69C0250003	CUTLER HAMMER
	CONTACT BLOCK, 1 NO, 1 NC				
	MCC+CCA-43RS		***MCC+CCA-43HS***		
5	2	10250T2		69C0250005	CUTLER HAMMER
	CONTACT BLOCK, 2 NO				
	MCC+CCA-43MA		***MCC+CCA-43LT***		
6	4	10250TM36		69L0070001	CUTLER HAMMER
	LEGEND PLATE, BLANK, BLACK, STANDARD SIZE.				
	MCC+CCA-43MA		***MCC+CCA-43LT***	***MCC+CCA-43RS***	
	MCC+CCA-43HS				
7	2	10250T101		69O0010001	CUTLER HAMMER
	OPERATOR, STANDARD PUSHBUTTON, BLACK				
	MCC+CCA-43RS		***MCC+CCA-43HS***		
8	1	10250T108		69O0010007	CUTLER HAMMER
	OPERATOR, STANDARD PUSHBUTTON, BLUE				
	MCC+CCA-43LT				

9	1	10250T15434	69O0010052	CUTLER HAMMER

OPERATOR, KEY SWITCH, 3 POSITION SPRING RETURN FROM RIGHT AND LEFT, VERTICAL MOUNTING, NEMA 4-13, KEY REMOVABLE IN CENTER POSITION, CAM CODE 3.

MCC+CCA-43MA

10	1	2404C	69S0120002	ELECTRO SWITCH

SWITCH, VOLTMETER TRANSFER, NAMEPLATE MARKED: OFF,1-2, 2-3,3-1

MCC+CCA-43V

11	1	SLC40N-0307-DHT2FB	69L0063037	IDEC

LIGHT DISPLAY, SLC-40 SERIES, TYPE F, LED (WITH CHECK TERMINALS), 24VDC, (3 ROWS X 7 COLUMNS), BLACK FRAME, CLEAR LENS. INCLUDE 40 #SLC-JP42 JUMPERS.

MCC+CCA-LB1

12	3	190XSUM-3	69C0142009	ITI

CURRENT TRANSFORMER, AUXILIARY , RATIO: 5+5+5:5 MODEL 190X

MCC+CCA-AUXCTB ***MCC+CCA-AUXCTA*** ***MCC+CCA-AUXCTC***

13	1	US2:9410D24VDC	US2:9410D24VDC	SIEMENS

POWER METER, 9410 SERIES, DIN96 PANEL MOUNT METER, INTEGRATED COLOR DISPLAY, 1DO, 3DI, DUAL PORT ETHERNET, LOW VOLTAGE CONTROL POWER.

MCC+CCA-95M

14	1	SEE SCADA BOM	69P0410010	WONDERWARE

PC, BOX PC WITH INTOUCH SOFTWARE, REFER TO SCADA BOM FOR DETAILS

MCC+CCA-BOXPC

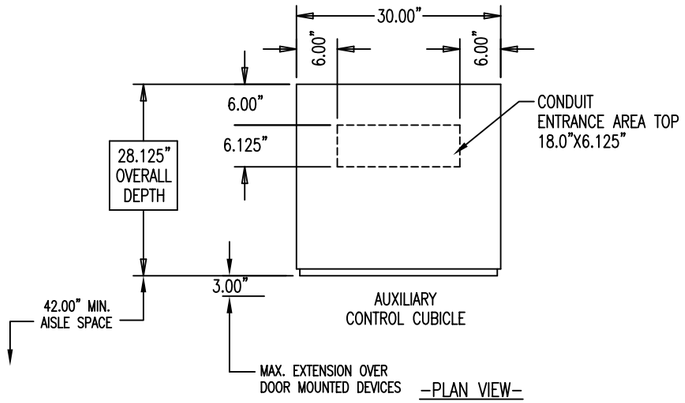

-PLAN VIEW-

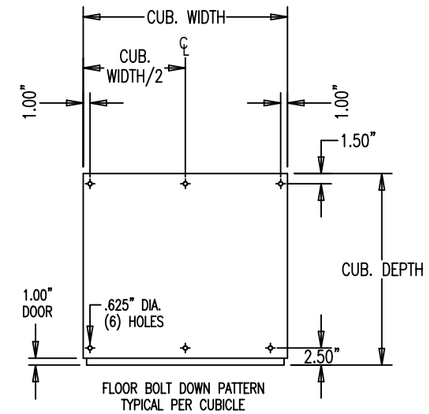

NOTES:

1. ENCLOSURES TO BE FABRICATED FROM FORMED CHANNEL FRAMEWORK AND CODE GAUGE SHEET STEEL. ALL STEEL PARTS SHALL BE PREPARED FOR PAINTING BY A FIVE STEP CLEANING, PHOSPHATIZING AND SEALING PROCESS. THE PARTS SHALL THEN BE PAINTED ANSI NO. 61 GRAY, UTILIZING POLYESTER POWDER COATING APPLIED BY THE ELECTROSTATIC METHOD AND CURED IN A BAKING OVEN. THIS FINISH IS SUITABLE FOR OUTDOOR, AS WELL AS INDOOR APPLICATIONS.
2. THE CALIBRATION AND SETTINGS OF ALL PROTECTIVE DEVICES MUST BE DETERMINED BY A SHORT CIRCUIT AND COORDINATION STUDY PROVIDED BY OTHERS.

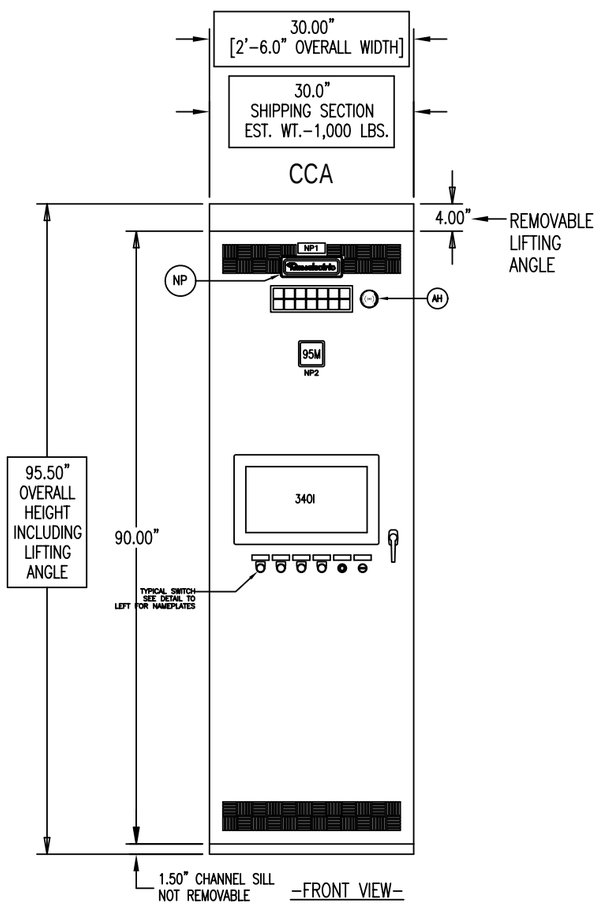

-FRONT VIEW-

DEVICE	EXTERIOR DEVICES	MANUFACTURER
AH	ALARM HORN	ALLEN BRADLEY
43LT	LAMP TEST PUSHBUTTON	CUTLER HAMMER
43HS	HORN SILENCE PUSHBUTTON	CUTLER HAMMER
43RS	GEN. BUS ALARM RESET PUSHBUTTON	CUTLER HAMMER
43MA	MAN/AUTO SELECTOR SWITCH	CUTLER HAMMER
34USB	USB PORT	EATON
34EP	ETHERNET PORT	EATON
LB1	2 X 7 LED ANNUNCIATOR	IDEC
NP	RUSSELECTRIC NAMEPLATE	RUSSELECTRIC
3401	OPERATOR INTERFACE 22"	SIEMENS
95M	POWER METER PM9410	SIEMENS

LOAD CONTROLS NOT IN AUTO (A)	LOAD SHED ON (R)	PLC NO.1 IN CONTROL (G)	PLC FAILURE (R)	PLC NO.2 IN CONTROL (G)	CRITICAL CONTROL VOLTAGE FAILURE (R)	(A)
ARC FLASH REDUCTION MOODE ENABLED (R)	(R)	START SIGNAL PRESENT (W)	CONTROLS NOT IN AUTO (R)	ALARM HORN SILENCED (A)	OPERATOR INTERFACE ALARM (R)	(R)

LB1

NOTES:

1. DETAILS SHOWN ARE FOR BACKLIT ANNUNCIATION BOX. WINDOWS ENGRAVED AS SHOWN. LETTERS INDICATE LED COLOR:
   A=AMBER G=GREEN
   R=RED W=WHITE
2. ALL LETTERING TO BE APPROX. 3/16, BLACK LETTERS ENGRAVED ON WHITE BACKGROUND.

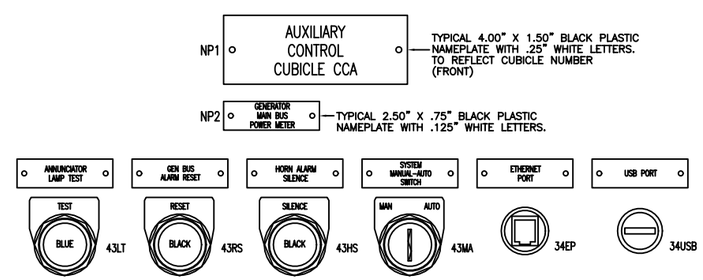

ALL	30A	24DC	N/A	N/A	N/A	*	N/A
	30A	125DC	N/A	N/A	N/A		
	15A	120AC	60HZ	3	3 OR 4		
	-	-	-	-	-		
SECTION	AMPERES	MAX VOLTAGE	FREQ.	PHASE	WIRE	SHORT CIRCUIT CURRENT RATING	LARGEST MOTOR FLA

SECTION RATINGS

SWITCHGEAR SHALL BEAR THE E156889 (508A) U/L LABEL FOR INDUSTRIAL CONTROL PANELS IN A TYPE I ENCLOSURE AS LISTED IN THE TABLE ABOVE.

ADDITIONAL OR REPLACEMENT DEVICES SHALL BE OF THE SAME MANUFACTURER, TYPE DESIGNATION, AND EQUAL OR GREATER THAN THE REPLACED DEVICE OR SECTION.

REVISION 0	REFERENCE DOCUMENTS	
5/16/22 JF	NO.	TITLE
SUBMITTAL	3009518009-S-MCC	SCHEMATIC DIAGRAMS
	3009518009-W-MCC	WIRING DIAGRAMS
	3009518009-I	INTERCONNECTS

INSTALLATION

UK HEALTHCARE - GOOD SAMARITANS
LEXINGTON, KENTUCKY

ITEM #20000

DFTP.	DDD	05/12/22
CHKD.		
APPD.		

TITLE

PHYSICAL DETAILS
FRONT AND PLAN VIEWS
AUX. CONTROL
SWITCHBOARD

Russelectric
A Siemens Business

DWG. NO. 3009518009-P-MCC — 0

SHEET NO. 01 CON'T ON - - — REV.

Bill of Material ROIP

3009518009 UK GOOD SAMARITANS HOSPITAL, Order #3009518009

Bill of Material, Sheets 1-2

The following example includes a key to describe the information contained in the bill of material.

All components listed in the bill of materials are in alphabetical order by manufacturer.

Item	Qty.	Catalog No.	Description Swbd+Cubicle-Device	Part No.	Manufacturer
1	1	S201U-K30		52C0280101	ABB

CIRCUIT BREAKER, S200U MINIATURE, 1 POLE, UL489 "C'", 30.0 AMP RATING, "K-CURVE".

GPS+C1-72EB

Key:

Switchboard Identification: **GPS**
Cubicle location: **C1**
Component or device identification: **72EB**

NOTE: The component device I.D. is exclusive within a cubicle location, and is typically prefixed by its associated ANSI standard device function number.

Item	Qty.	Catalog No.	Description Swbd+Cubicle-Device	Part No.	Manufacturer
1	1	SEE SCADA BOM		69P0410010	WONDERWARE

PC, BOX PC WITH INTOUCH SOFTWARE, REFER TO SCADA BOM FOR DETAILS

ROIP+REM-BOXPC

DEVICE	EXTERIOR DEVICES	MANUFACTURER
AH	ALARM HORN SPEAKERS	LOGITECH
NP	RUSSELECTRIC NAMEPLATE	RUSSELECTRIC
340IP	OPERATOR INTERFACE 22"	SIEMENS

NOTES:

1. ENCLOSURES TO BE FABRICATED FROM CODE GAUGE SHEET STEEL. ALL STEEL PARTS SHALL BE PREPARED FOR PAINTING BY A FIVE STEP CLEANING, PHOSPHATIZING AND SEALING PROCESS. THE PARTS SHALL THEN BE PAINTED ANSI NO. 61 GRAY, UTILIZING POLYESTER POWDER COATING APPLIED BY THE ELECTROSTAIC METHOD AND CURED IN A BAKING OVEN. THIS FINISH IS SUITABLE FOR OUTDOOR, AS WELL AS INDOOR APPLICATIONS.
2. NEMA 1 SURFACE MOUNTED ENCLOSURE.
3. QUANTITY: (1) REQUIRED.
4. CONTROL VOLTAGE: 24VDC.

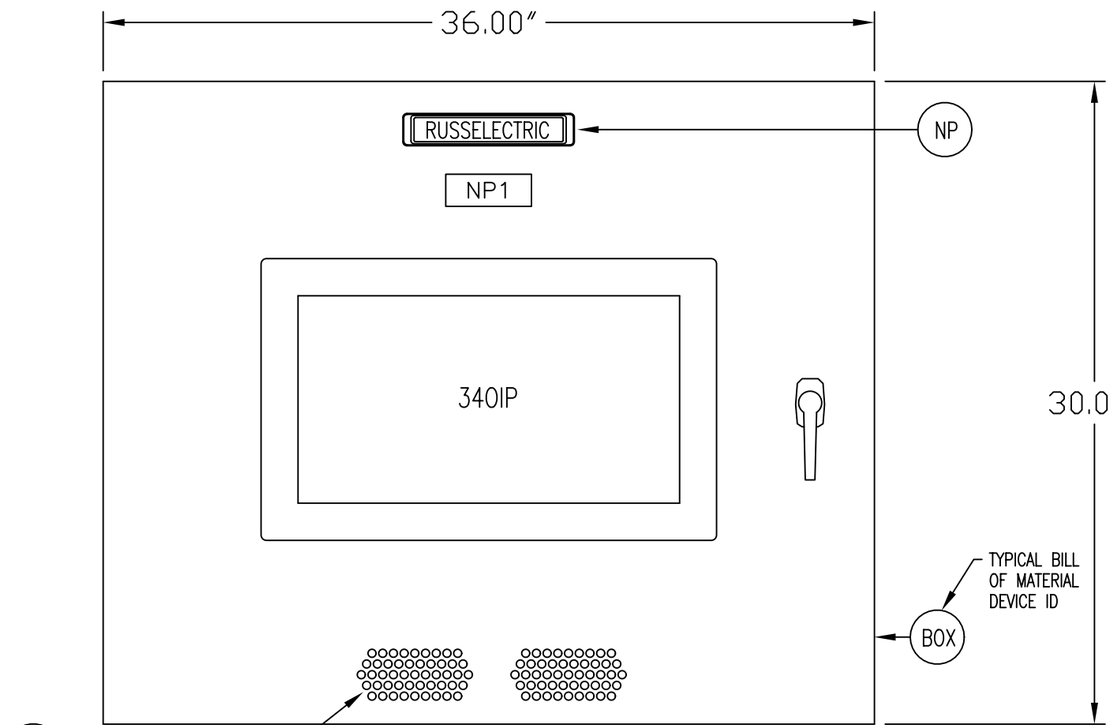

-FRONT VIEW-
ANNUNCIATOR PANEL

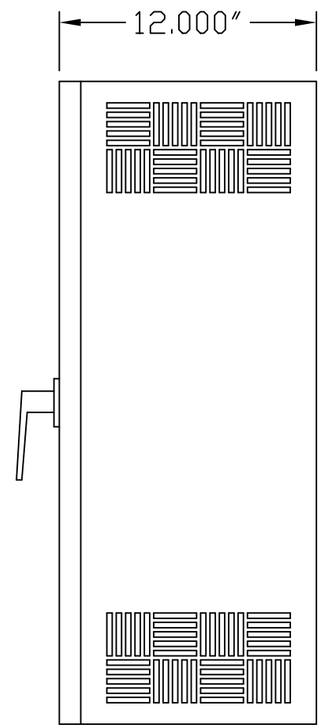

-SIDE VIEW-
ANNUNCIATOR PANEL

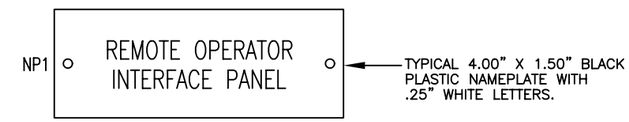

SECTION	AMPERES	MAX VOLTAGE	FREQ.	PHASE	WIRE	SHORT CIRCUIT CURRENT RATING	LARGEST MOTOR FLA
ALL	30A	24DC	N/A	N/A	N/A	*	N/A
	30A	125DC	N/A	N/A	N/A		
	15A	120AC	60HZ	3	3 OR 4		
	-	-	-	-	-		

SECTION RATINGS

SWITCHGEAR SHALL BEAR THE E156889 (508A) U/L LABEL FOR INDUSTRIAL CONTROL PANELS IN A TYPE I ENCLOSURE AS LISTED IN THE TABLE ABOVE.

ADDITIONAL OR REPLACEMENT DEVICES SHALL BE OF THE SAME MANUFACTURER, TYPE DESIGNATION, AND EQUAL OR GREATER THAN THE REPLACED DEVICE OR SECTION.

REVISION 0	REFERENCE DOCUMENTS	
5/26/22 JF	NO.	TITLE
SUBMITTAL	3009518009-S-ROIP	SCHEMATIC DIAGRAMS
	3009518009-W-ROIP	WIRING DIAGRAMS
	3009518009-I	INTERCONNECTS

INSTALLATION
UK HEALTHCARE - GOOD SAMARITANS
LEXINGTON, KENTUCKY

ITEM #22000

DFTP.	DDD	05/12/22
CHKD.		
APPD.		

TITLE
PHYSICAL DETAILS
REMOTE ENCLOSURE

Russelectric
A Siemens Business

DWG. NO. 3009518009-P-ROIP — REV. 0

SHEET NO. 01 CON'T ON --

Bill of Material Scada BOM

3009518009 UK GOOD SAMARITANS HOSPITAL, Order #3009518009

Bill of Material, Sheets 1-2

The following example includes a key to describe the information contained in the bill of material.

All components listed in the bill of materials are in alphabetical order by manufacturer.

Item	Qty.	Catalog No.	Description Swbd+Cubicle-Device	Part No.	Manufacturer
1	1	S201U-K30		52C0280101	ABB

CIRCUIT BREAKER, S200U MINIATURE, 1 POLE, UL489 "C'", 30.0 AMP RATING, "K-CURVE".

GPS+C1-72EB

Key:

Switchboard Identification: **GPS**
Cubicle location: **C1**
Component or device identification: **72EB**

NOTE: The component device I.D. is exclusive within a cubicle location, and is typically prefixed by its associated ANSI standard device function number.

Item	Qty.	Catalog No.	Description Swbd+Cubicle-Device	Part No.	Manufacturer
1	2	6AV78600DH300AA0		6AV78600DH300AA0	SIEMENS
	ACCESSORIES, SIMATIC IPC ACCESSORIES DISPLAYPORT CABLE, 3M, VESA-COMPATIBLE.				
	MCCA+CCA-ACC		***ROIP+REM-ACC***		
2	2	6AV78622BF000AA0		6AV78622BF000AA0	SIEMENS
	DISPLAY PANEL, SIMATIC IFP2200 BASIC FLAT PANEL 22" DISPLAY (16:9) TOUCH, 1920 X 1080 PIXELS, STANDARD UP TO 5M, FOR 24V DC, DISPLAYPORT/VGA INTERFACE, RESISTIVE BASED TOUCH OPERATION.				
	MCCA+CCA-OIP		***ROIP+REM-OIP***		
3	2	WWBOXPC-60K-TSNE1U-2020		69P0410028	WONDERWARE
	COMPUTER, WONDERWARE BOX PC (SERIES E) WITH INTOUCH 60K RUNTIME LICENSE, V2020, WINDOWS 10 OS.				
	MCCA+CCA-PC		***ROIP+REM-PC***		

SCADA SUBMITTAL

UK GOOD SAMARITAN

LEXINGTON,KY
SHOP ORDER #3009518009

TABLE OF CONTENTS

1.0 HUMAN MACHINE INTERFACE (HMI) OVERVIEW 1

1.1 SCADA Screen Assignments 1

2.0 SCADA FEATURES 3

2.1 Oneline 3
2.2 Metering 4
2.2.1 Breaker/Monitor Metering 4
2.2.2 Generator Metering/Setpoints 4
2.3 Menu 5
2.4 PLC Communication Status 6
2.5 Legend 6
2.6 Master Controls 7
2.7 Load Bank Control 8
2.8 Generator Demand - Eng/Gen Based Spinning Reserve 9
2.9 Load Controls 10
2.10 Breaker Priorities 11
2.11 Transfer Controls 12
2.12 Active Alarms 13
2.13 Alarm & Event History 14
2.14 Alarm Log Viewer 14
2.15 Security Login 15
2.16 Help 16

3.0 ADDITIONAL SCREENS 17

4.0 SIMULATOR SYSTEM 18

5.0 EQUIPMENT 27

5.1 Wonderware Intouch v2020 28

1.0 Human Machine Interface (HMI) Overview

A total of (2) 22” operator interface panels are provided to access PLCs’ timers and setpoints, engine sequencing, display system status and alarms, and to enable certain control functions. Also communicates with multiple devices for power metering values.

- Hardware – (2) 22” Siemens Simatic Touch Panel, 1920x1080 Resolution, Win10, InTouch v2020
- System Oneline Screen: The system one-line screen will display the generator power in kW and the operating status (running/stopped/not available), the status for each circuit breaker in the system (open/closed/withdrawn/alarm) and the status of bus (energized/de-energized). System and Login status is displayed and a menu bar is available to allow access to the system control screens.
- Power Metering Screens: The following devices will be polled for their respective data points.
  a) (2) Caterpillar Engines – EMCP4.3 – ~70 points (standard)
  b) (11) Siemens WL Breakers – 11 points (standard)
  c) (1) Siemens – 9410 Power Meter – 11 points (standard)
- Menu Screen: The menu screen will index all of the screens used on the SCADA system in the form of a collapsible tab.
- PLC Communication Status Screen: The PLC Comm Statuses will be monitored on this screen as a quick reference if a PLC is faulting.
- Legend Screen: The legend will explain what each icon represents and what status it can be in.
- Master Controls Screen: Master Control Screen: The master control screen soft key control for the following modes: the master selector switch, no load test switch and gen bus alarm reset push button.
- Load Bank Control Screen: From the Load Bank Screen, the operator may select engines for Load Bank Tests and well as set points for the tests. An operator may also select the type of load bank test. Manual, Concurrent and Consecutive
- Generator Demand Setpoints Screen: The generator demand setpoints screen will display the generator demand parameters. The operator may select which mode of operation they wish to operate in and adjust these setpoints from this screen as well as enable/disable generator demand operation, and initiate a generator increase sequence, and change the sequence of the engines. Runtime and the status of the engines are also available.
- Load Control Setpoints Screen: The load control setpoints screen will display the overload %kW setpoint, overload timer setpoint, auto/bypass load control, current load step and load shed activated.
- ATS Priorities Screen: The ATS Priorities screen will display the priority of the ATS’s, expected KW, the position of the ATS and status of adding/shedding. The operator can set the Load Controls to Auto/Bypass and manually Load Add/Shed ATS’s
- Active Alarm Screen: The system alarm screen will display the last 1024 active alarms in the system.
- Alarm/Event History Screen: The alarm/event history screen will display the last 1024 alarms and events and allow an operator access to logged alarm/event history files, which can be stored indefinitely (typically one year).
- Login Screen: The security login screen allows an operator to log into the system in order to make system parameter and operational changes.
- Help Screens: A help screen can be accessed from a button on each set point or control screen that

provides a brief explanation of the associated set points and/or controls located on that screen.

2.0 SCADA Features

*** The following screens are samples; they are not job specific ***

ONELINE - The single line diagram displays the generator distribution and utility distribution switchgear. Power flow is displayed by color changes in the active single line. An open breaker and/or de-energized bus will be displayed green. A closed breaker and/or energized bus will be displayed red. A locked out breaker or one with an active alarm will be displayed as flashing yellow, red or green depending on the alarm condition. A System Status Bar is provided for quick visual reference of system status, user login, and system modes enabled.

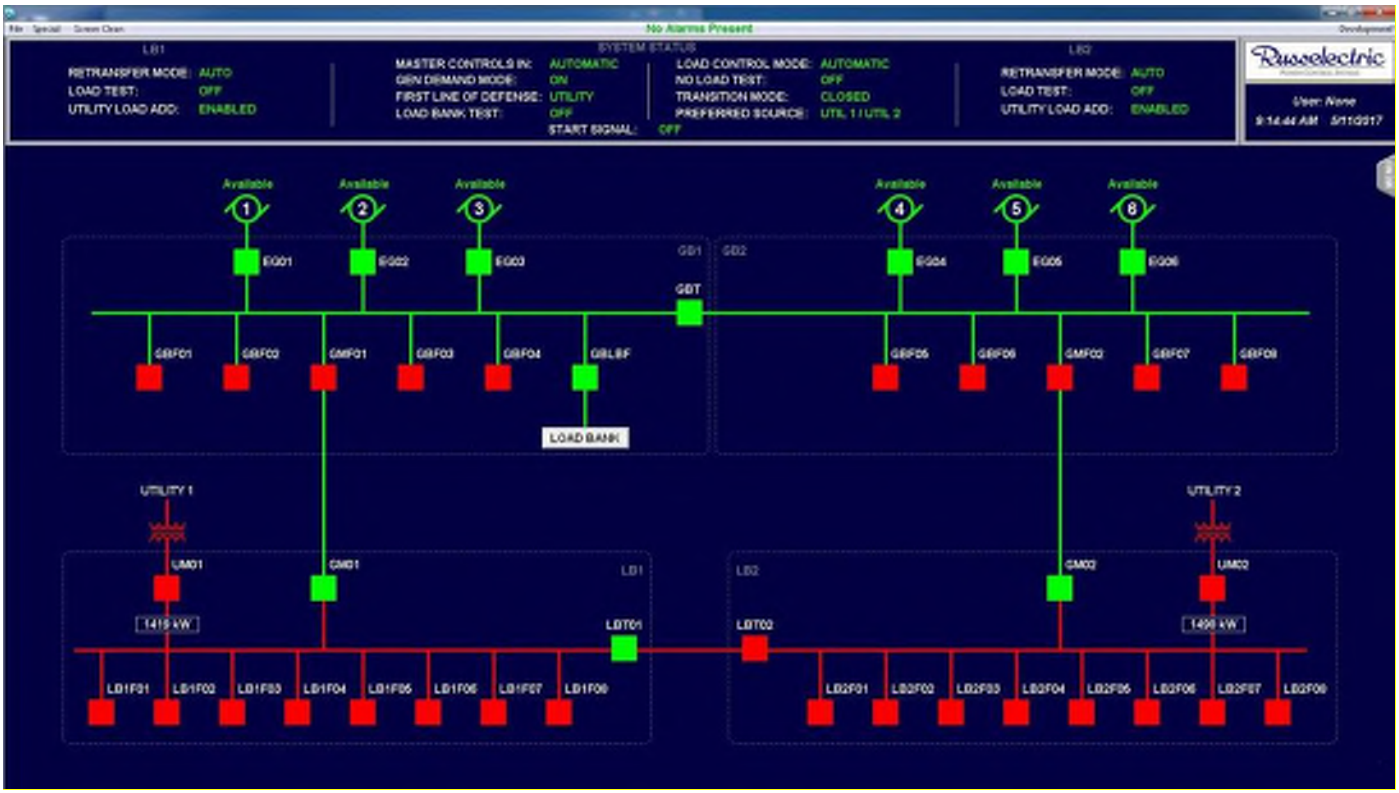

Typical Generator Distribution Switchgear with Transfer Control (M-T-M) Single Line

Metering - The metering screens display important information regarding the devices utilized in the system. Most of these are opened by clicking on the respective icon. Individual screens are allotted per device and display quantifiable data if available.

Selecting a breaker icon (■) from the single line will display a metering window. The metering window displays real time analog power values. The type of meter will be displayed on this screen. This is a standard 11 point data screen which is used for many different devices such as Breaker Trip Units, Power Monitors, Protective Relays, etc.

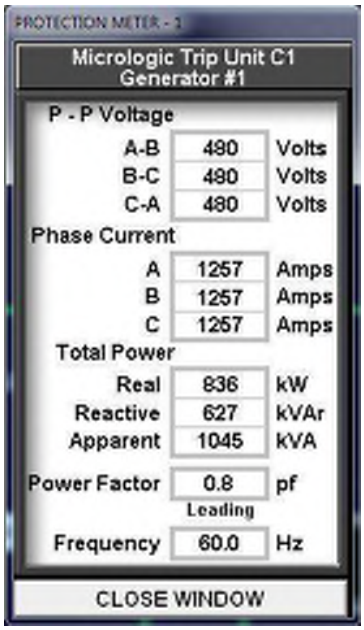

Typical Metering Pop-up (P Trip Units, Schweitzer Relays, etc.)

Selecting a generator icon ( ) from the single line will display an engine parameter/setpoint window.

- Cooldown Timer - The length of time the generator needs to cool down by running unloaded.
- Failure to Synchronize Timer - The length of time allowed for the generator to try and synchronize before the system activates the Fail to Synchronize Alarm.
- Runtime of Latest Operation - Displays the duration of the last or current engine start operation.

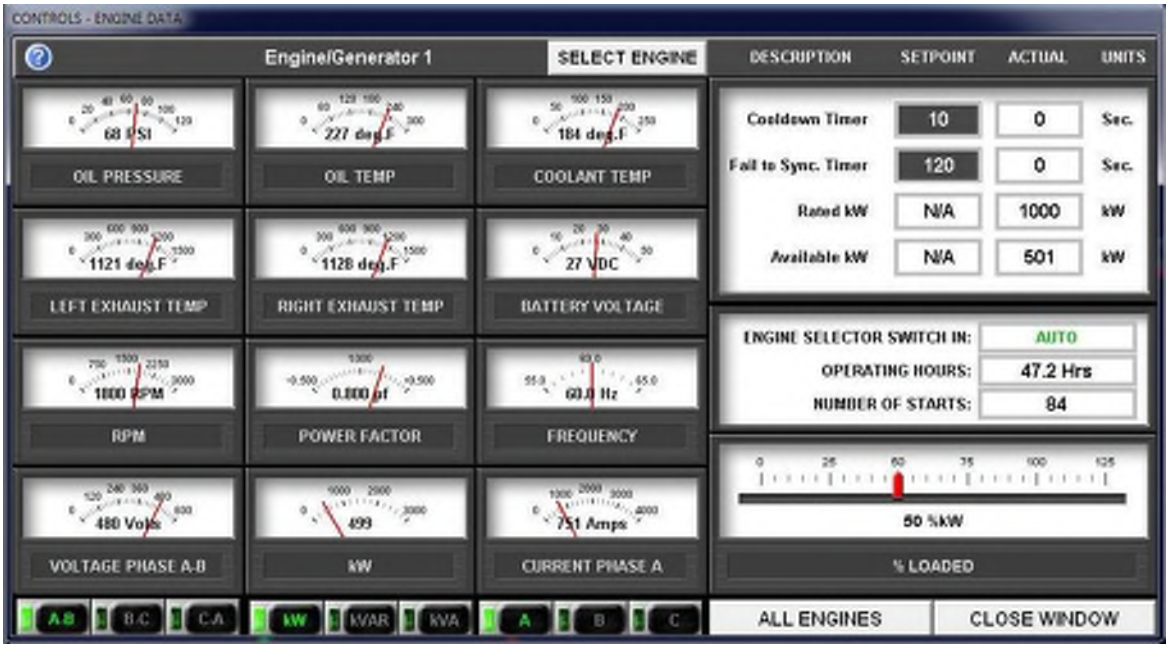

Typical Generator Metering/Setpoint Pop-up

<u>MENU</u> – Selecting the menu tab on the right side of the screen will bring up the main menu.

Main Menu

PLC COMM STATUS – Displays the communication status of all PLCs located in the system. This is mostly used for the field technician to diagnose what might be causing system issues.

PLC Communication Status Pop-up

LEGEND – Displays the standard operating status of generators, breakers and buslines.

Oneline Legend Pop-up

MASTER CONTROLS –

- Main Breaker Fail to Sync Timer - The length of time allowed for two sources to synchronize before the system activates the FAIL TO SYNC. Alarm.

- Gen Bus Ramp Rate (0-100%) - The time it will take to ramp load between sources if the load to be ramped is at 100%. (for lesser loading, delay is proportional)
- Master Controls Switch – Sets the system in either Manual Mode or Automatic Mode.
- Transition Mode – Allows the user to set the system in Open or Closed Transition Mode, if the system allows it.
- First Line of Defense – Sets the system to rely on a different Utility source or Generators during a power outage.
- No - Load Test Switch - Enables and disables a no-load test mode. When the mode is enabled all available generators will start and parallel to the emergency bus.
- Gen Bus Alarm Reset Push Button – Immediately resets any alarms located on the Generator Bus.
- Preferred Source Switch – Allows the user to select which Utility Source will typically power the switchboard. The user can choose either source or have both.
- Source Initiate Push Button – Immediately transfers the switchboard to the Utility source that was selected.

Master Controls Pop-up

LOAD BANK CONTROLS –

- Engine Test Duration – Displays the duration of the Engines in Test.

- Load Bank Cooldown Timer - The length of time the generator needs to cool down by running unloaded.
- Load Bank Test Switch – Allows the user to run the Load Bank Test or disable it.
- Test Type Switch – Allows the user to select which form of Load Bank Test that will be activated.
  Type 1 will have the generators be tested in a consecutive manner, in which the first generator will run for the Test Duration and then being to cool down. During this cool down, the next generator will begin it's test and so forth.
  Type 2 will have all the selected generators run at the same time and duration.
- Generator Select Test Button - Selects the Generator for the load bank test mode.

Generator Load Bank Test Pop-up

GENERATOR DEMAND - **Eng/Gen Based Spinning Reserve:** This mode the system adds or subtracts generators to assure that there is a spare generator online at all times and that the largest generator could be lost without the need for shedding load. ***This mode can only be used with three or more generators. It's well suited for systems with mismatched generators.***

- Spinning Reserve Enable Timer - The amount of time before the spinning reserve controls are put into operation.
- Minimum Number of Gens Online - The minimum amount of generators that are required to run the ENG/GEN based Spinning Reserve.
- Increase Generator Capacity Timer - The length of time before the system actually starts the engine and adds it to the bus after the increase setpoint is reached.
- Calculated Increase Load Setpoint - The power level that will result in an addition of a generator. This "setpoint" is not adjustable, but calculated based on the "Minimum Number of Gens Online" setpoint.
- Decrease to Increase Deadband - The power level increase the system must experience after removing a generator from the bus before adding one.
- Decrease Generator Capacity Timer - The length of time before the system actually removes an engine from the bus after the decrease setpoint is reached. The engine is placed in standby mode.
- Calculated Decrease Generator Setpoint - The power level that will result in a generator being removed from the bus. This "setpoint" is not adjustable, but calculated based on the "Minimum Number of Gen Online" and "Decrease to Increase Deadband" setpoints.
- Generator Demand Enable Switch - Enables and disables the ENG/GEN based spinning reserve controls.
- Increase Capacity Push Button - Immediately starts an engine-generator and places in online.
- Engine Sequence Setpoints - Engine sequence is used in conjunction with generator demand to rotate the order of which the engines will be started or subtracted from the bus. If the sequence is changed during and automatic operation, any engine online will remain online. If the engine selected as base engine is not online, it will be immediately started up and placed online. Should a generator be locked out of the system, it will be skipped over and the next generator in sequence will be started, or, stopped as required.

"Engine Based Spinning Reserve" Generator Demand Control Screen

LOAD CONTROLS –

- Overload Setpoint - The power level at which system takes action in response to an overload condition.
- Overload Shed Timer - The length of time before the system takes action in response to an overload condition. (This timer has inverse characteristics)
- Load Add Timer – Below Engine Count – The length of time before the system adds the next priority load to the generator bus when the next priority to add is LESS THAN the number of generators closed to the bus.
- Load Add Timer – Equal to Engine Count – The length of time before the system adds the next priority load to the generator bus when the next priority to add is EQUAL TO the number of generators closed to the bus.
- Load Add Timer – Above Engine Count – The length of time before the system adds the next priority load to the generator bus when the next priority to add is GREATER THAN the number of generators closed to the bus & the required kW capacity is less than the available kW capacity.
- Load Control Switch - Toggles system between automatic and bypass load control.
- Load Add Push Button - Adds one sub-priority of load for each time the button is pressed while in Manual Load Control.
- Load Shed Push Button - Sheds one sub-priority of load for each time the button is pressed.

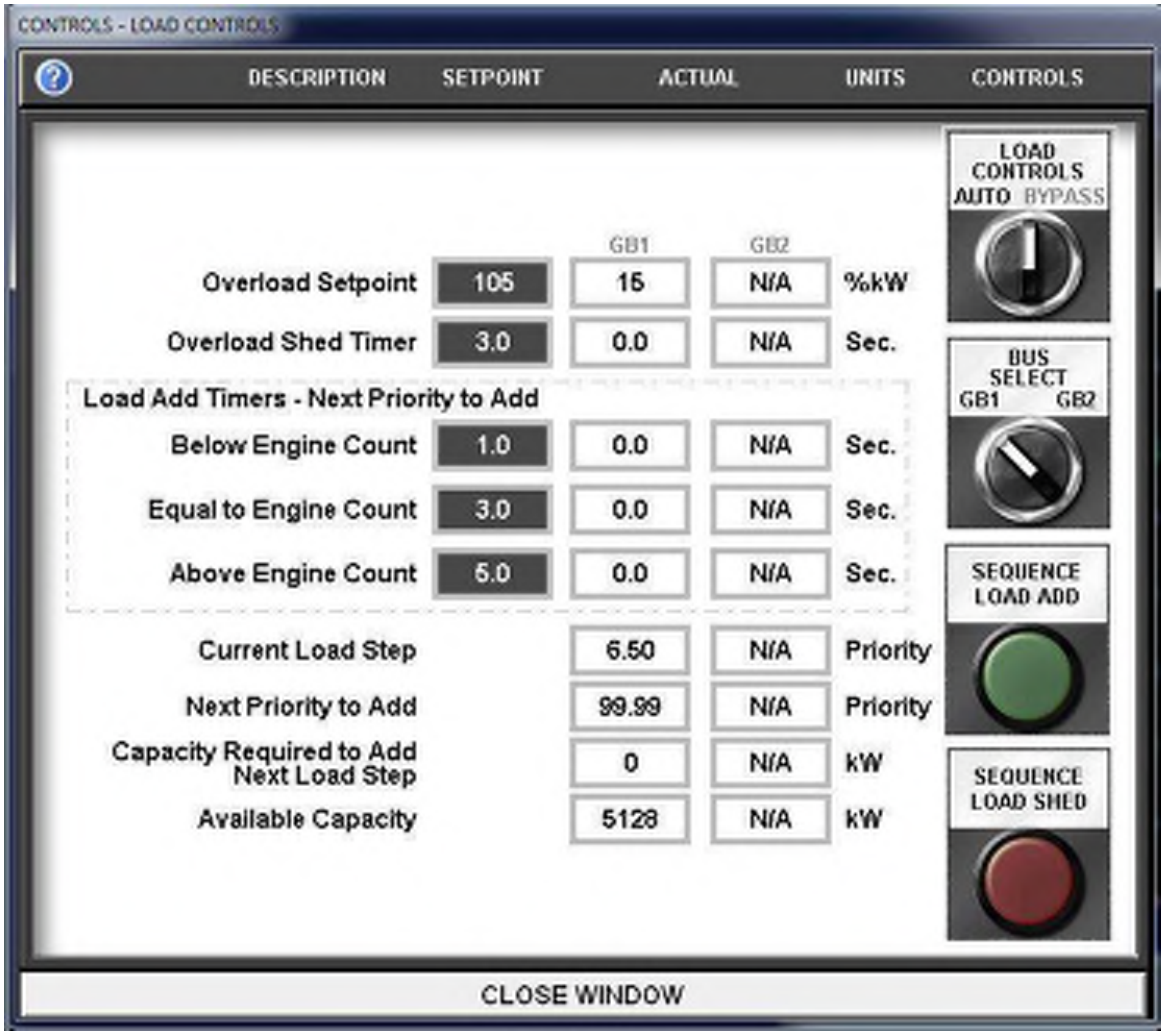

Load Controls Setpoints Screen

BREAKER PRIORITIES –

- Load Control Switch - Toggles system between automatic and bypass load control.
- Load Add Push Button - Adds one sub-priority of load for each time the button is pressed while in Manual Load Control.
- Load Shed Push Button - Sheds one sub-priority of load for each time the button is pressed.
- Breaker Priority – Breaker priority is used to determine the order of which the breakers will be closed to the bus.
- Expected kW Setpoint – The amount of kW that is required by the associated load. If load control is only based on the number of generators online this setpoint should be set to 9999.

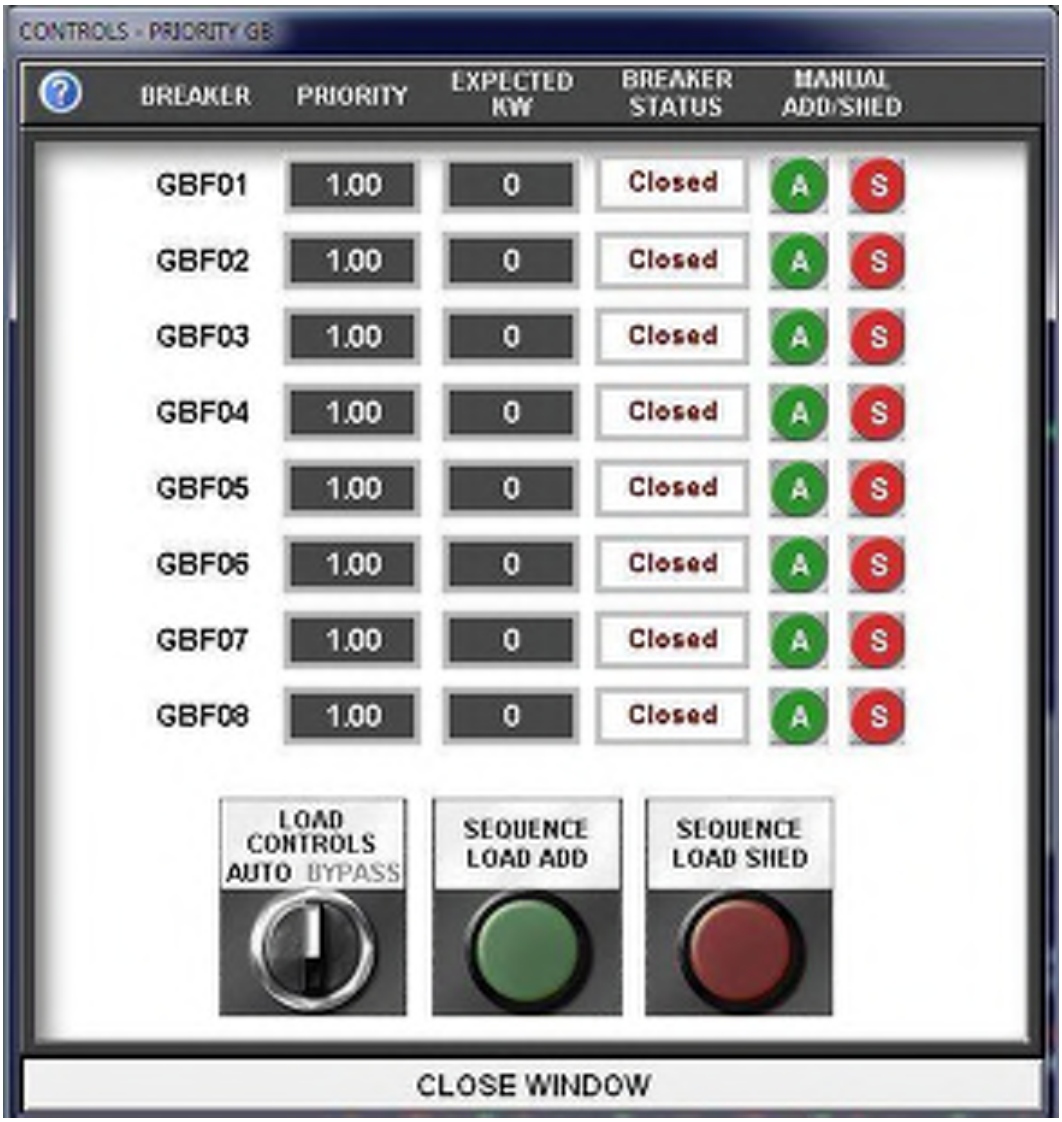

Typical Breaker Priority Screen

TRANSFER CONTROL –

- Utility Voltage Failure Timer - The length of time before the system acts on a power failure on the utility.
- Utility Voltage Returned Timer - The length of time before the system acts on a restoration of power on the utility
- Utility Hit Counter Setpoint - The number of times that utility can fail during the Utility Hit Duration setting. This logic will force the system into 'emergency mode' if utility power is cycled enough times to meet the "Utility Hit Counter Setpoint" with not more than "Utility Hit Duration Setpoint" between each voltage failure.
- Utility Hit Duration Timer - The amount of time to allow after a utility failure before clearing the Utility Hit Count.
- Open Transition Timer - The length of time that the bus must be de-energized before the system closes a circuit breaker to energize the bus, during an open transition transfer.
- Generators Required to Transfer – The number of generators that must be closed to the generator bus before the Generator Main circuit breaker will close.
- Load Test Switch - Toggles between normal & test. If LOAD TEST mode is selected, the generators will start and close to the emergency bus and the building load will transfer to generator power.
- Retransfer Mode Switch - Toggles between manual & auto. If Auto Retransfer mode is selected, when utility power returns the building loads will automatically retransfer back to utility. If Manual Retransfer mode is selected, when utility power returns the building loads will not transfer back to the utility source until the Retransfer Initiate button is pressed.

Transfer Control Screen

ACTIVE ALARMS - The active alarm window is a real time display of the last 1,024 alarm conditions, time stamped down to the millisecond that requires immediate attention. The window displays when the alarm came in, when it was acknowledged by an operator, and when it returned to normal status. The operator has the option to Enable/Disable the Alarm Screen from automatically popping-up.

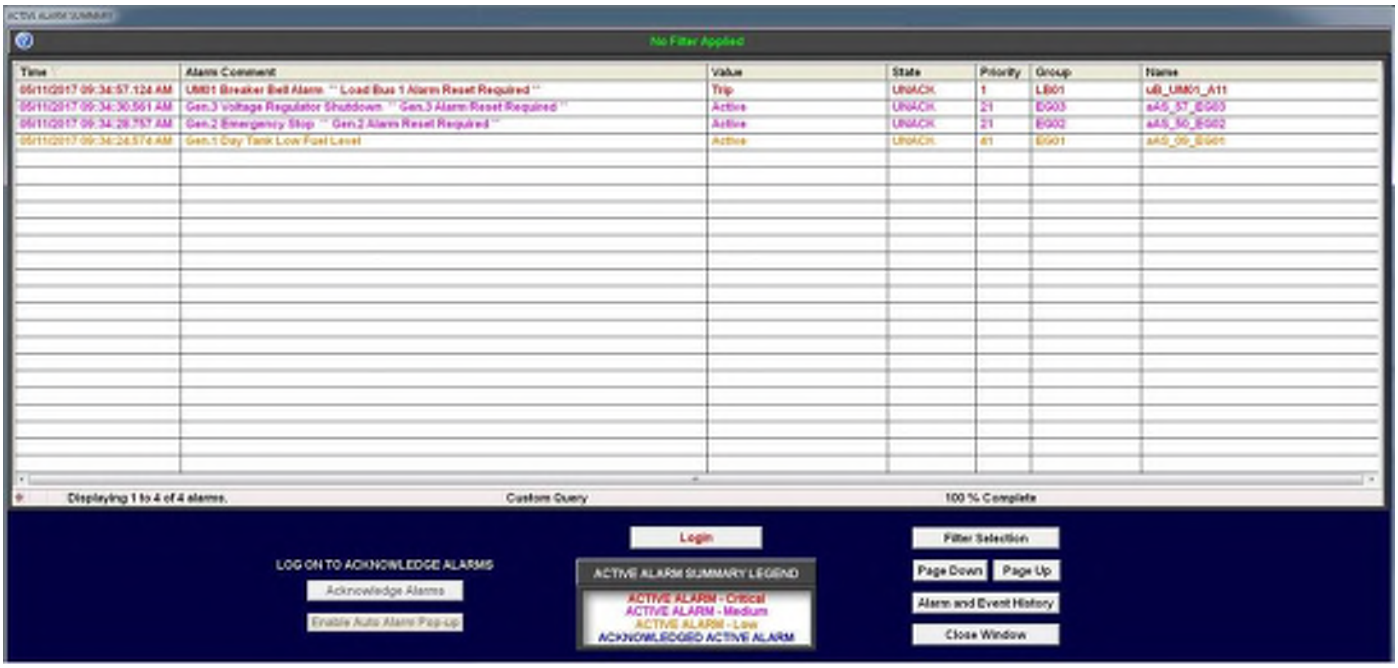

Active Alarm Screen (SAMPLE)

ALARM & EVENT HISTORY - The event history window displays a log of the last 1,024 unacknowledged / acknowledged alarms and status points such as; breaker positions, setpoint or timer adjustments, control or test operations, power failures and many more fully customizable discrete or analog conditions. An alarm log viewer is provided to view historical event log files which are stored and cycled on the computer's hard drive. The file logging procedure is fully customizable, allowing log files to store from one day to indefinitely.

Alarm & Event Screen (SAMPLE)

ALARM LOG VIEWER – Saves as a .csv file to allow for easy printing capabilities.

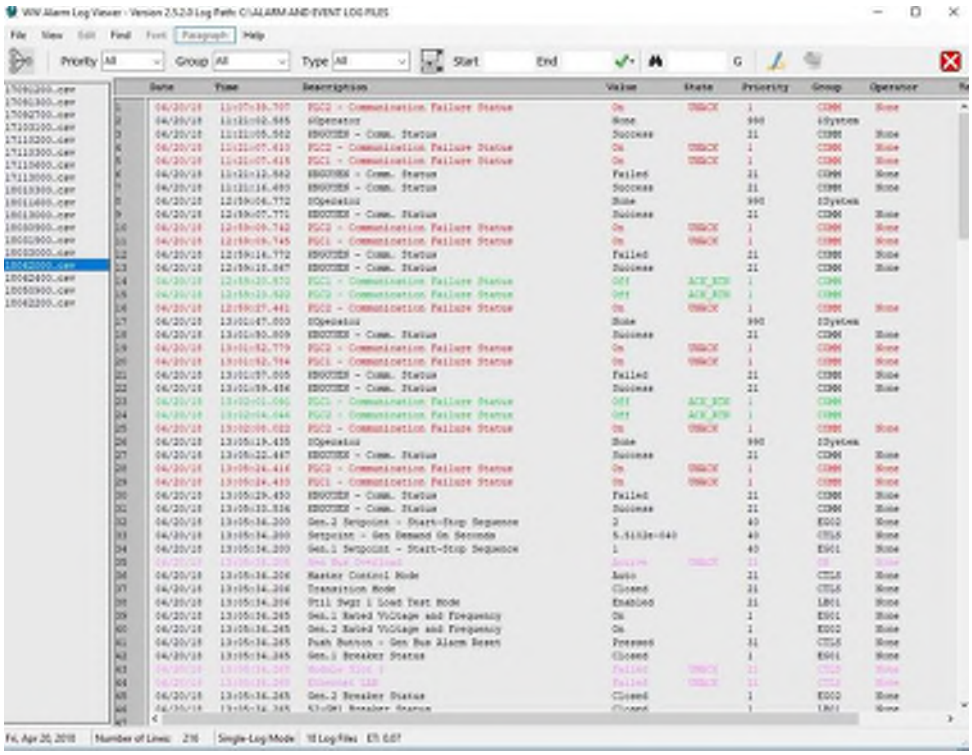

Typical Alarm Log File

LOGIN - Security is based on the concept of the operator "logging on" to the application, typing his/her name and password. You must configure a user name, password, and access level for each operator. There is no association between Microsoft operating system security and SCADA security. After an operator logs on to the application, access to any protected function will be granted upon verification of the operator's password and access. Automatic logoff occurs after 30 minutes (fully configurable). Five levels of security are provided.

- Setpoints Level
- Control Switches and Pushbuttons Level
- ATS Load Test Level
- No Load Test Level
- Acknowledge Alarms Level

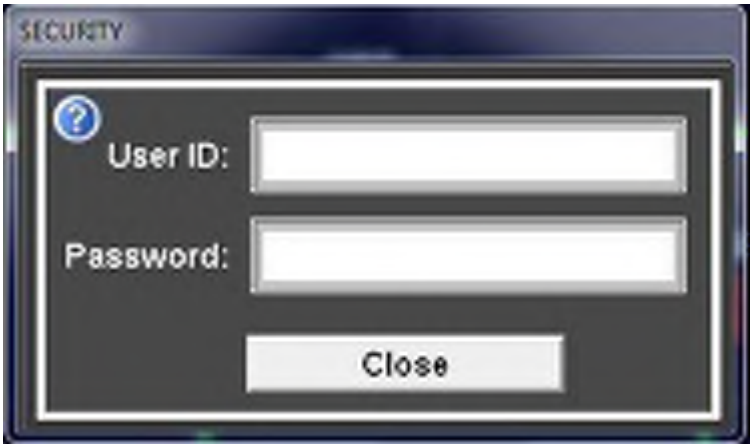

Login Window

Virtual Keyboard

Help – Help Screens can be accessed from a button on each set point or control screen that provides a brief explanation of the associated set points and/or controls located on that screen.

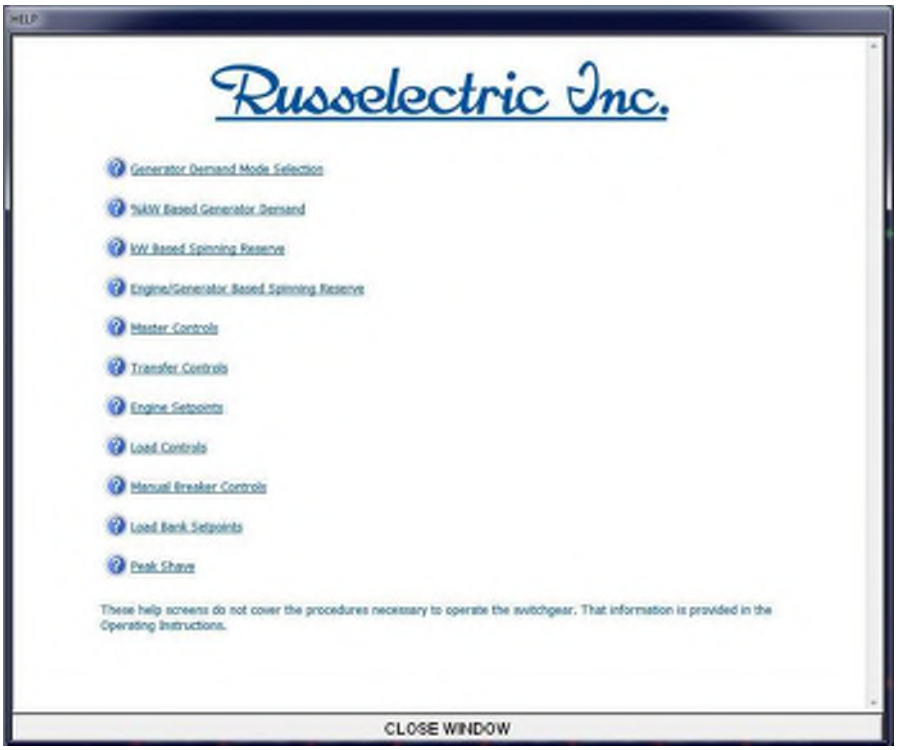

Help Screen Index

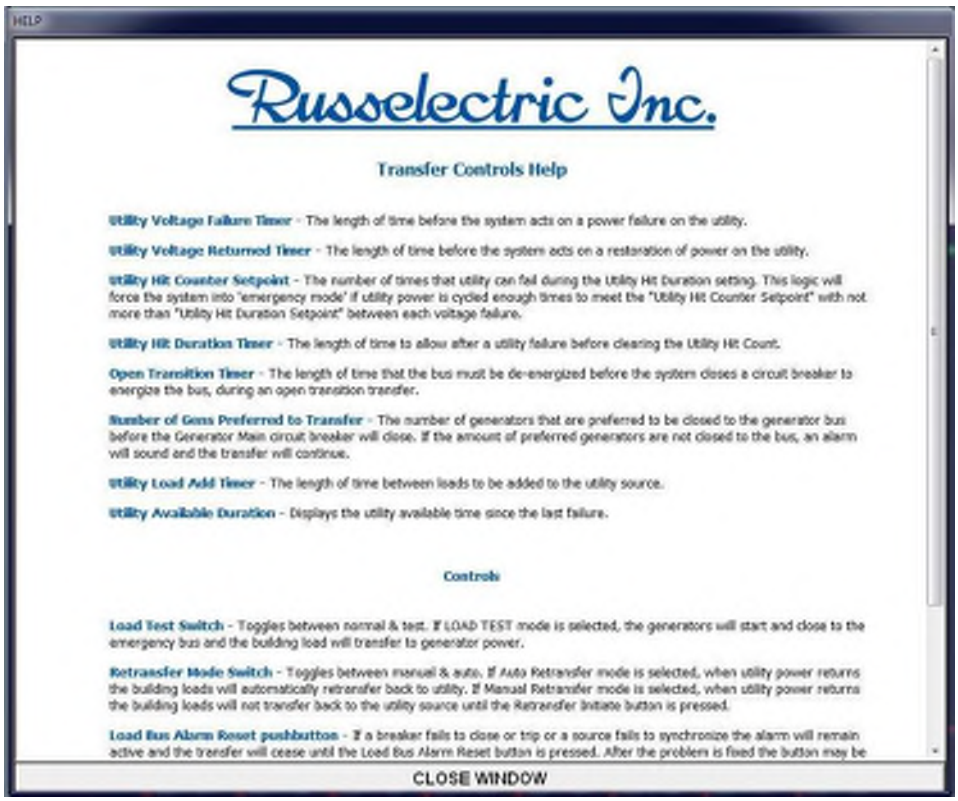

Detailed Help Screen

3.0 Additional Screens

*** The following screens are samples; they are not job specific ***

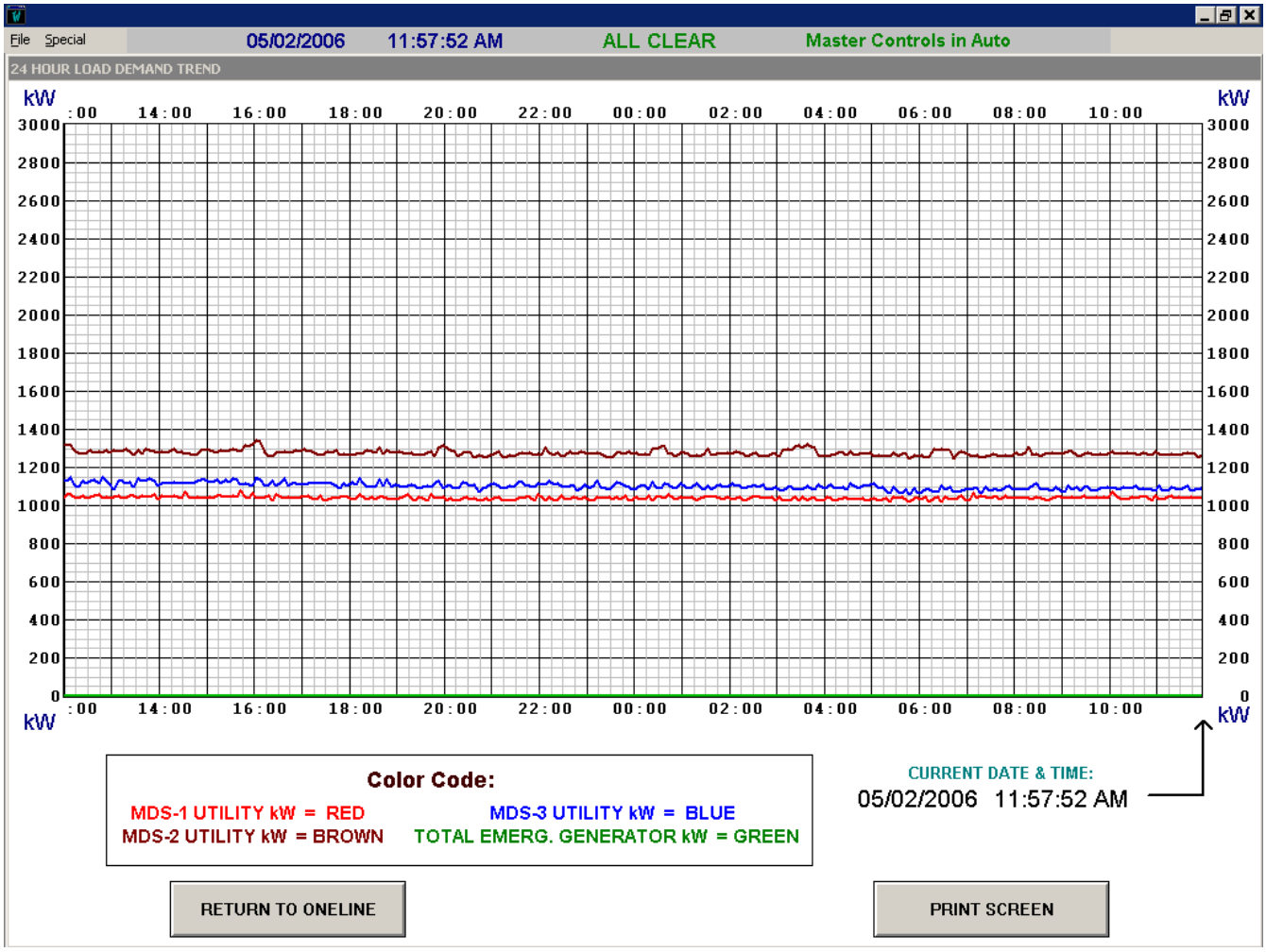

Real Time Trending Screen (SAMPLE)

4.0 Simulator Features

*** The following screens are samples; they are not job specific ***

Switchgear Enhanced Training Simulator System - A simulator separate from the online switchgear is provided for training users on the manual and automatic operation of the switchgear and OIP. Using duplicated existing OIP controls and set points along with additional simulation windows users can safely simulate the switchgear operation in a simulated environment.

Failure scenarios and set point changes, such as time delays and priority assignments can be pre-tested on the simulator before being tested in the online system reducing the amount of time required for online system testing and troubleshooting.

There are three main functions of the Enhanced Training Simulator:

- Training operators of the automatic system functions.
- Training operators of the manual system functions.
- Training operators of the OIP system functions.

The Enhanced Training Simulator is the top tier simulator package available and includes the following features:

- Graphic multicolored displays.
- All simulated data displayed shall appear, as it would be seen in the actual system.
- A system log shall provide a history of alarm, control and setup events including data and time stamp.
- Security log on protection.

The simulator mode is operated via the Simulator Display System (SDS) which consists of (3) monitors, desktop workstation and (3) dedicated PLCs used for simulation logic.

The SDS uses a separate monitor for the following functions (left to right):

- Duplicated OIP controls.
- Animated front view of the Russelectric supplied equipment.
- Simulation Controls.

Function Screens

When activated existing conditions of the online switchgear (set points, modes, and power source status) are used as a starting point for simulation mode. All simulated load values are programmable for each prioritized load.

The following are available simulations when using Enhanced Training simulator mode:

- System tests (Load Test, No Load Test, Load Bank Test etc…).
- Set point adjustments.
- Frequency meter switch interlocking.
- Synchroscope meter switch interlocking.
- Hardwired interlocks associated with manual breaker control.
- Metering for all hardwired analog meters.

- Generator demand.
- Load shed and block transfer controls.
- Failure or restoration of utility sources.
- Disabling generators.
- External tripping of circuit breakers.
- Protective relay or breaker trip unit initiated tripping of circuit breakers.
- Generator pre-alarm.
- Generator shutdown.
- Generator shutdown after cool down.
- Generator not in auto.

Specific system faults cannot be simulated when using training simulator mode.
Simulator Display System (SDS)

The SDS shall consist of a Dell Desktop PC and (3) monitors. The SDS shall communicate with the (3) simulator PLCs via Ethernet.

Hardware:
Dell Tower PC
Windows 10 Professional 64-bit English
Processor: Intel Processor – 6-Core, 3.6Hz-4.3GHz
Hard Drives: (2) 1TB M.2 SSD – RAID1
RAM: 32GB Memory
3-Display Ports Available
Microsoft Office Trial
3 Year ProSupport and NBD On-site Service

(3) Dell Monitors
3-Monitor Stand
3 Year Warranty

Wireless Keyboard and Mouse
USB Flash Drive

Software:
Intouch Runtime 60K Tag with I/O, v2020

PLC Case:
One GE Fanuc RX3i, PAC programmable logic controller with associated rack, power supply, Ethernet communication module.
(2) Additional RX3I CPE330 PLCs

Information Panel – This popup window displays some simple information regarding the simulator and how to reset the simulator.

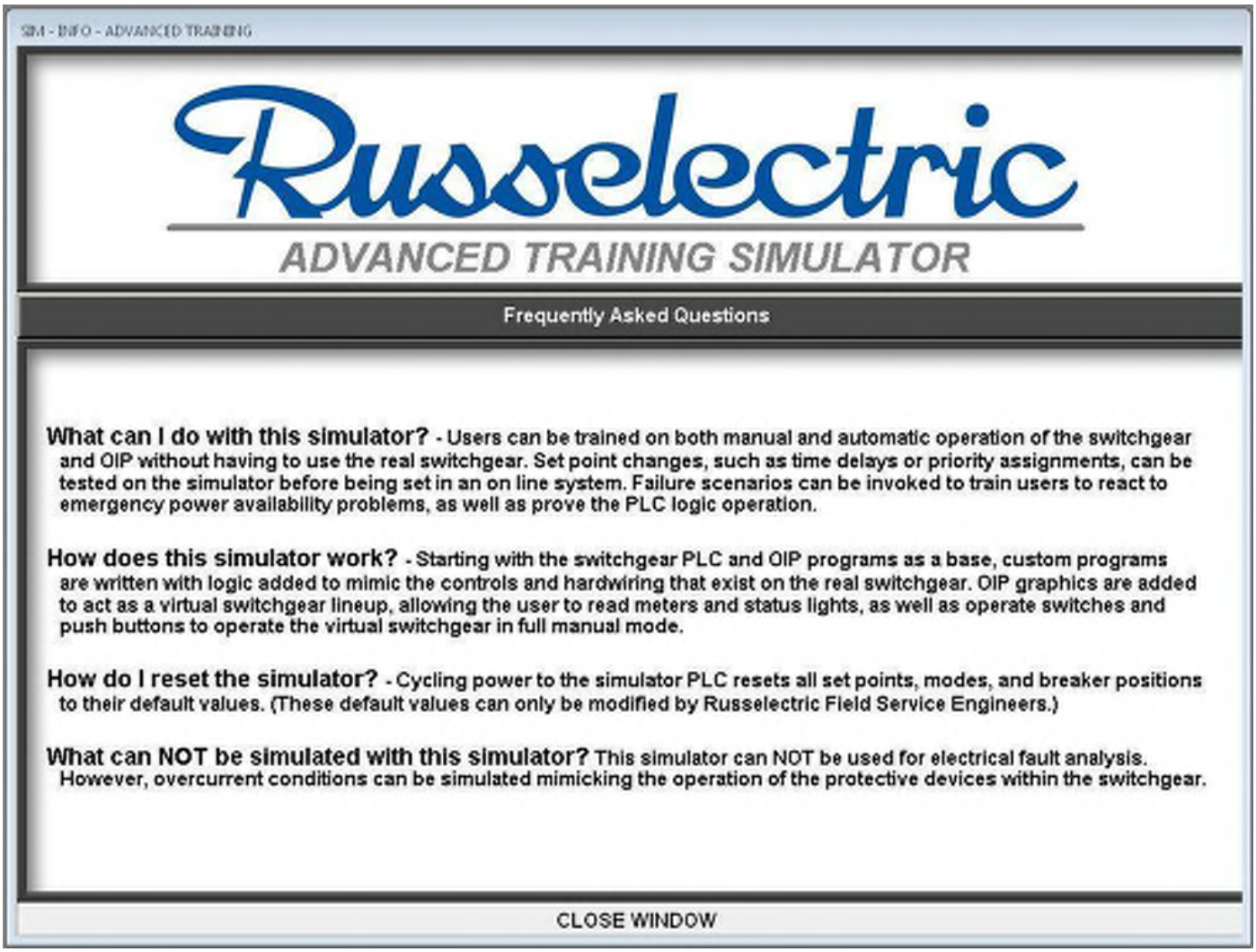

Enhanced Training Simulator: Information Panel

Elevation - The elevation frontview screen displays the actually physical representation of the switchgear. Clicking on a cubicle will pop-up to a control window for training purposes.

Enhanced Training Simulator: Elevation Frontview

Master Control Cubicle - The Master Control Cubicle screen displays the main system controls and switches available on the switchgear.

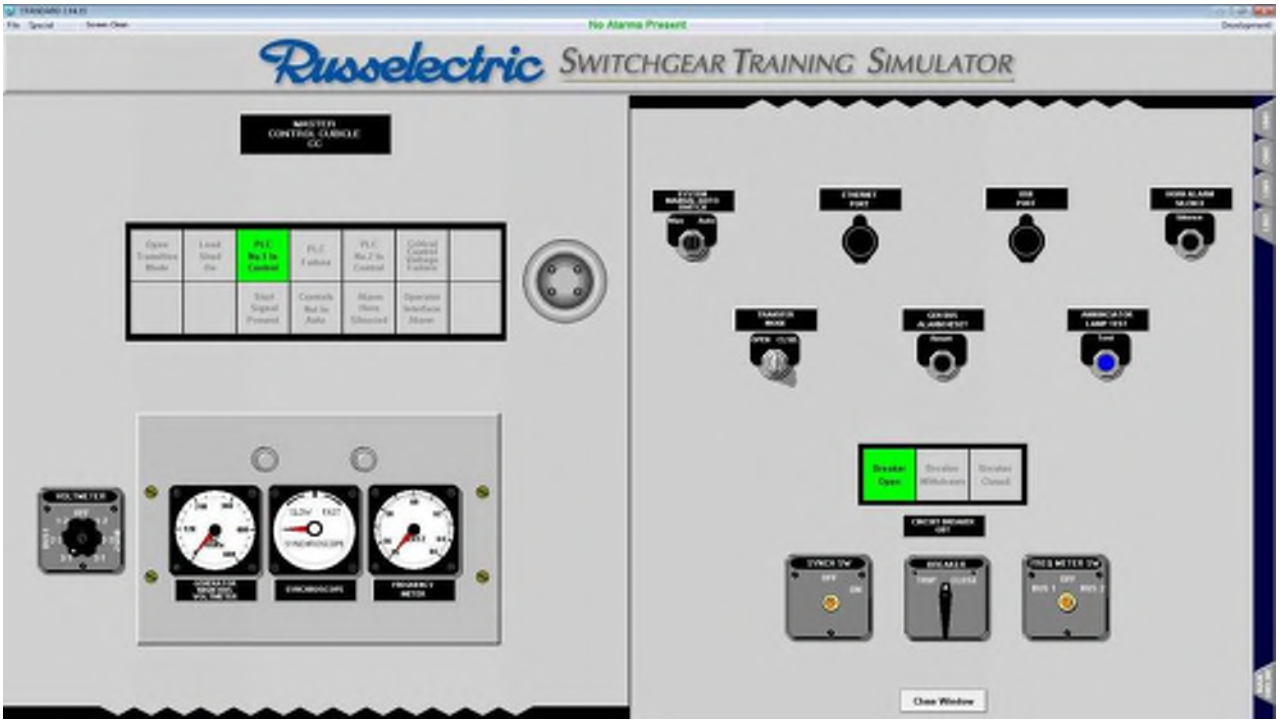

Enhanced Training Simulator: Master Control

Generator Control Cubicle - The Generator Control Cubicle screen displays the engine switches and meters associated with each generator. Generator breaker control is also available from this screen.

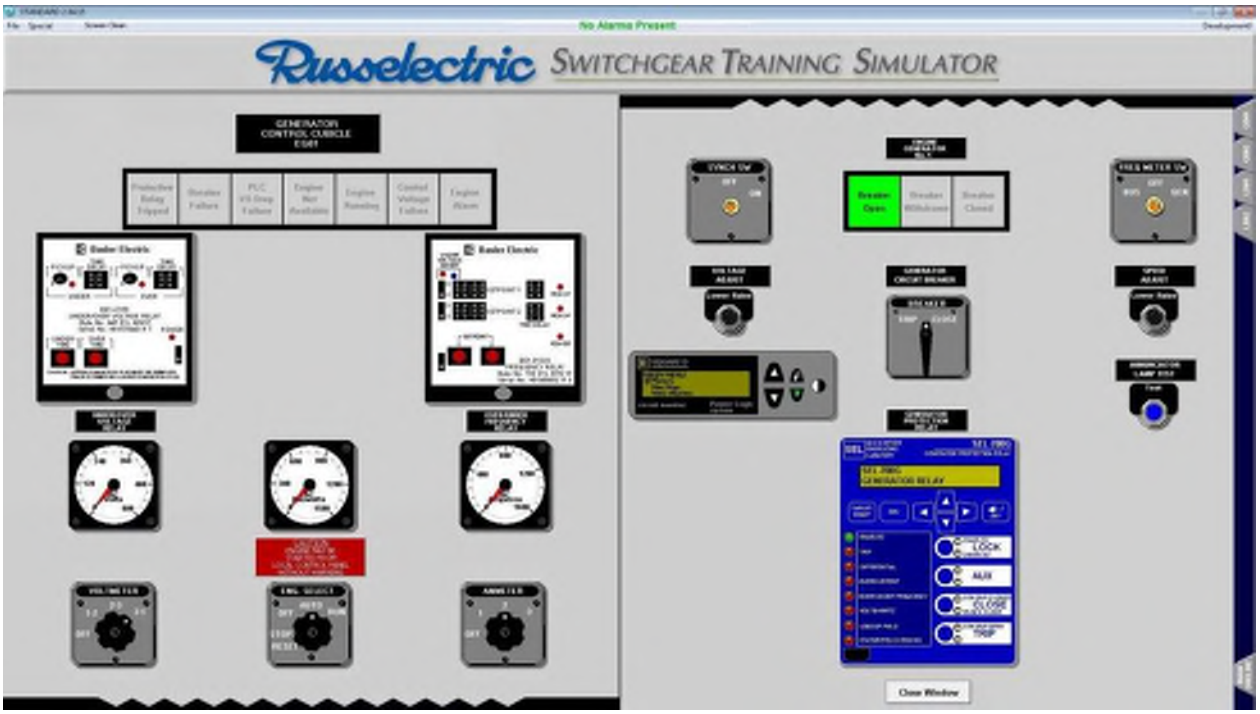

Enhanced Training Simulator: Generator Control

Transfer Control Cubicle - The Transfer Control Cubicle screen displays the transfer controls for the system. Analog metering data is also available for the associated main utility and gen main breakers.

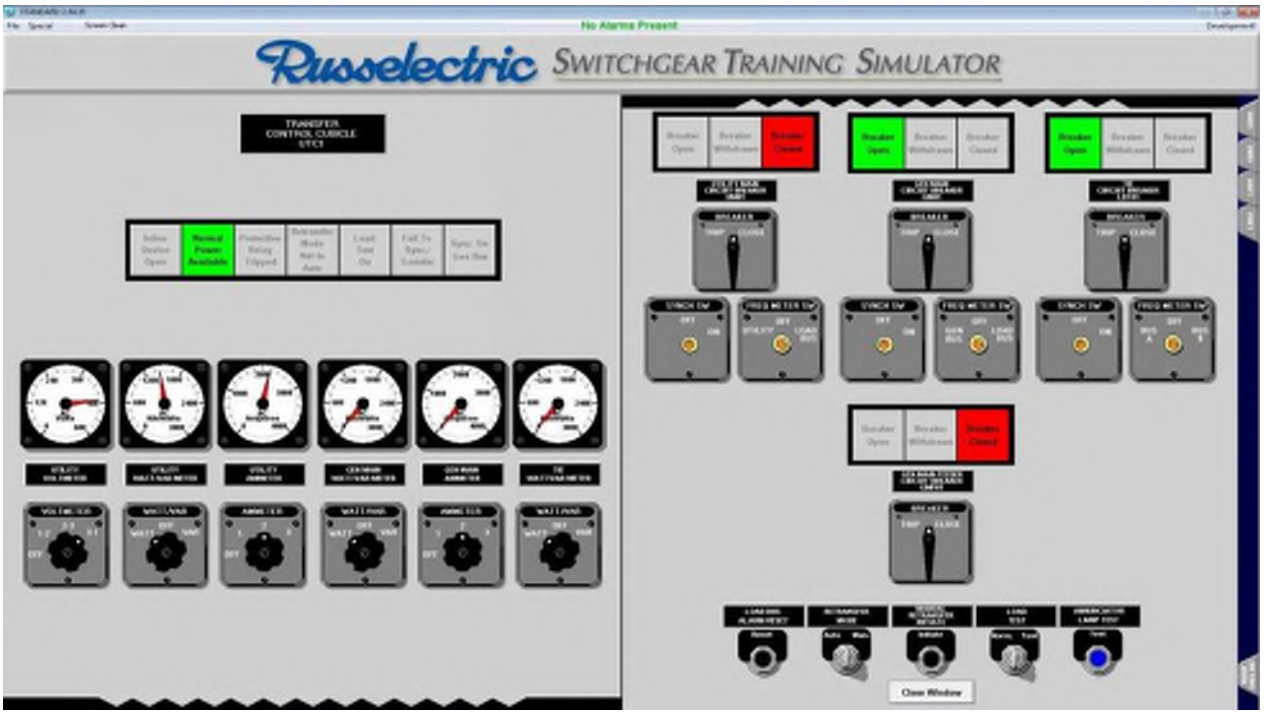

Enhanced Training Simulator: Transfer Control

ONELINE - The single line diagram for the simulator is identical to the original program's oneline barring an updated menu with simulator controls.

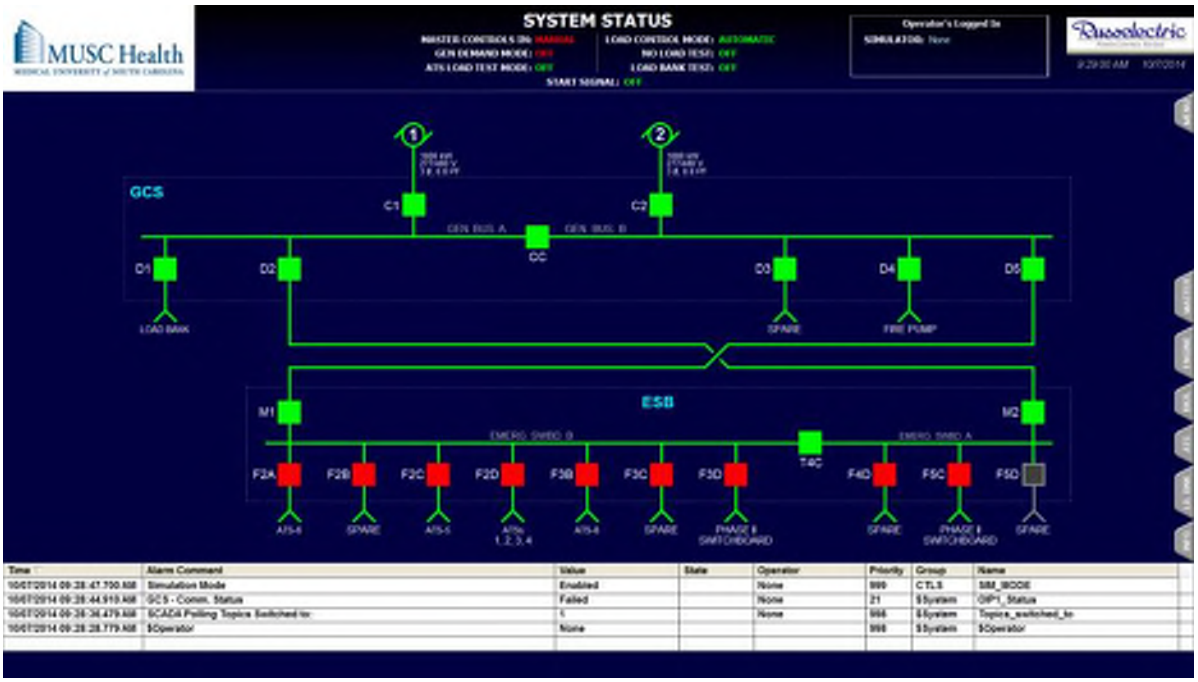

Enhanced Training Simulator: Oneline with Menu Active

Breaker Control - The control screen for the breakers allows the user to control the breaker. Hardwired interlocks for manual breaker operation cannot be simulated.

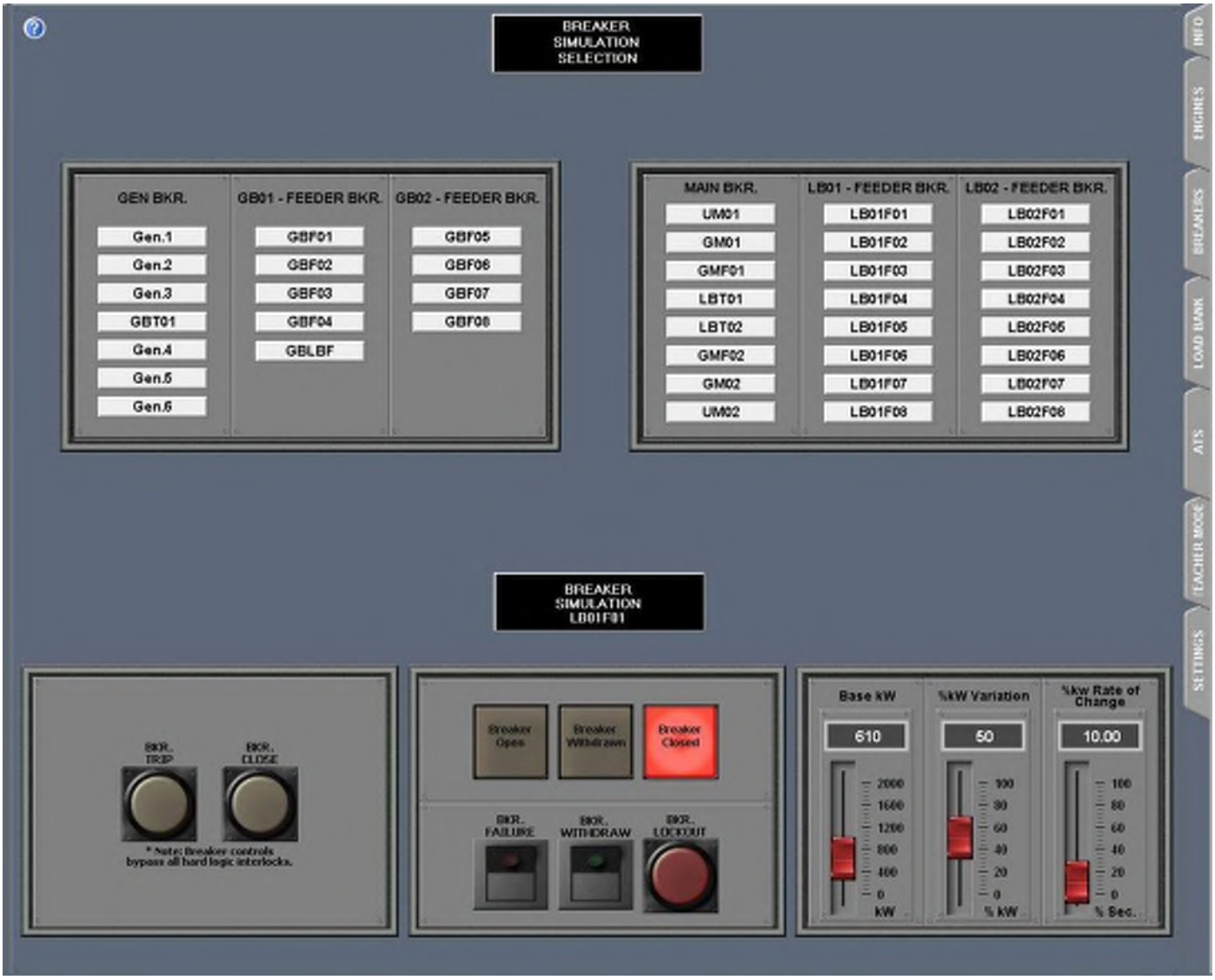

Enhanced Training Simulator: Breaker Control

Engine Control – The Engine Control screen allows the users to start/stop the generators as well as simulate standard engine failures/alarms.

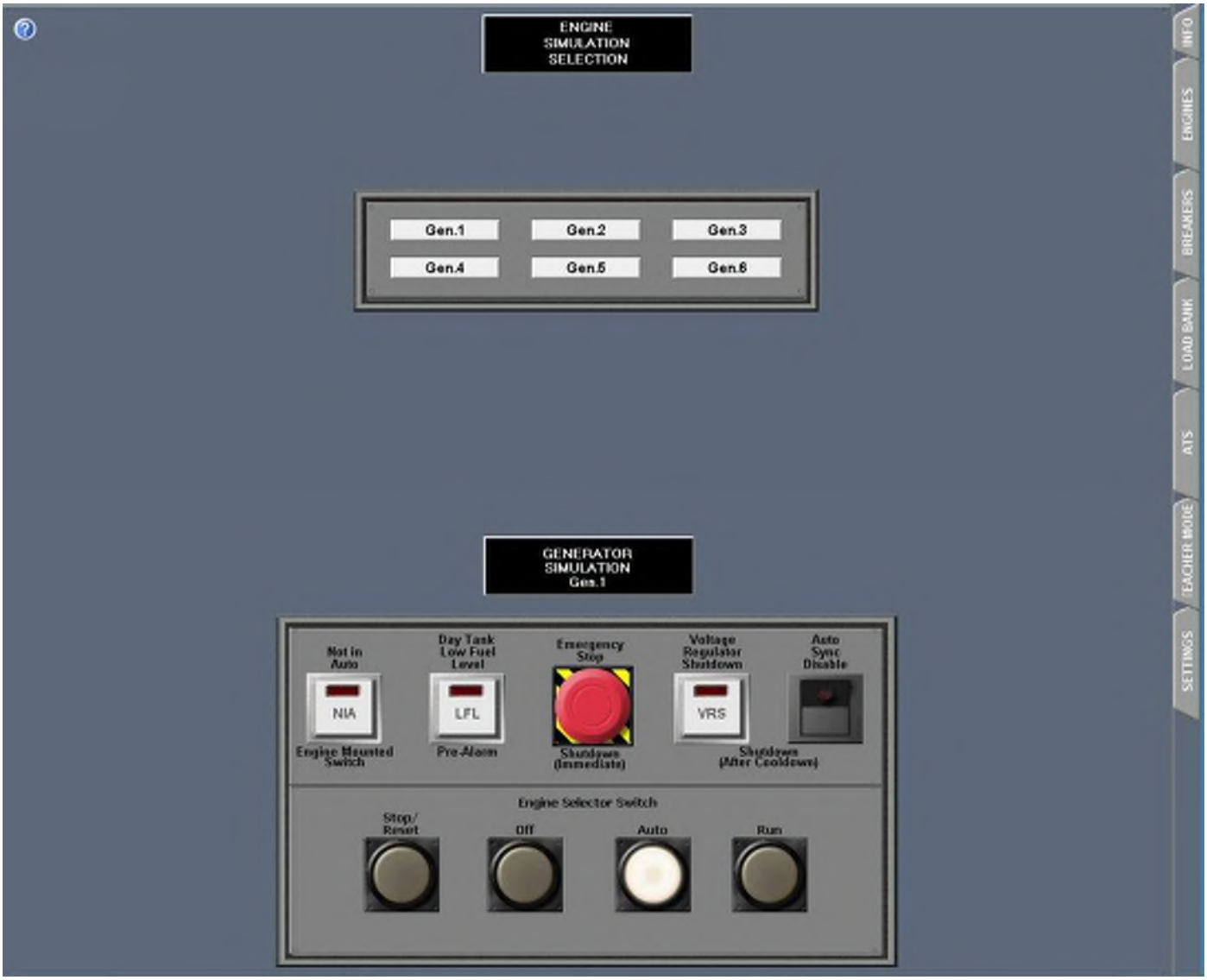

Enhanced Training Simulator: Engine Control

Load Bank Control – The Load Bank Control screen allows the user to increase/decrease capacity of the load bank once it is active.

Enhanced Training Simulator: Load Bank Capacity

4.0 Equipment

WWOIC1 –

- 22” Siemens OIP
- InTouch v2020
- Primary Polling Device

WWOIC2 –

- 22” Siemens OIP
- InTouch v2020
- Secondary Polling Device

WWOIC3 –

- 22” Siemens OIP
- InTouch v2020
- Client Polling Device

SIMULATOR –

- Dell Desktop w/ (3) Monitors
- InTouch v2020
- RX3I PLC Assembly, with (2) additional PLCs

IMAC1 –

- Customer Provided IMAC
- Virtual Machine with WIN10
- InTouch v2020
- Client Polling Device

IMAC2 –

- Customer Provided IMAC
- Virtual Machine with WIN10
- InTouch v2020
- Client Polling Device

IMAC3 –

- Customer Provided IMAC
- Virtual Machine with WIN10
- InTouch v2020
- Client Polling Device

Wonderware InTouch

The world's favorite HMI
and so much more...

Wonderware
by Schneider Electric

The World's favorite HMI and so much more...

Wonderware InTouch delivers truly transformational value. By improving real-time visibility into your processes, InTouch greatly improves operator effectiveness and increases control of your processes to simplify and enforce standardization and change management.

InTouch delivers a breakthrough in advanced engineering tools, delivering faster time to value, more effective HMI design, better trouble shooting, and ease of application maintenance. InTouch includes numerous new visual enhancements to improve the ability to identify and address abnormal situations before they impact operations. The powerful tools in InTouch go beyond the simplistic graphics provided by other vendors and enable application builders to focus on creating valuable content and to easily assemble effective HMI applications for simplicity, agility and performance.

While InTouch gives you the most powerful graphics tool available in any HMI, InTouch also makes it unbelievably easy to implement and encourage best practices to bring clarity, consistency and meaning to integrated data. With Wonderware InTouch, both experienced and entry-level operators are more easily able to identify, understand, react to and resolve abnormal situations, which also provides a unique solution to the industry-wide challenge of a retiring workforce.

The world's favorite HMI is also fully mobile - casual and remote web HMI and Mobile SCADA users can now view and control real-time plant floor operations data using a secure web browser from just about any "Smart" device such as tablets and smartphones.

> "We did triple the work in one-fourth the time because Wonderware software's repeatability and deployment of objects makes development easy."
>
> — Jeromy Peterson, Chief Operating Officer, CP Control Technologies

InTouch Brings It All Together

In today's modern industrial facilities there is a myriad of data sources — from field devices, to PLCs to full blown Distributed Control Systems (DCS). InTouch has been the leader in open systems since 1987 and has earned its reputation by connecting to more plant floor devices and systems than anyone. Industrial plants across the globe use InTouch instead of the software provided by their PLC suppliers. InTouch can connect to hundreds of available I/O and OPC servers and the Wonderware DA Server toolkit allows you to easily create specialized data servers if needed. No data is off limits to InTouch.

InTouch Fits Any Situation in Your Facility

Wonderware InTouch can be deployed to meet your specific requirements, from the traditional control room implementation with one or more monitors, to panel displays at an equipment location or manufacturing cell, to even a mobile operator moving through the facility using a tablet or smartphone.

InTouch Access Anywhere is a feature that provides access to InTouch applications via HTML5-compliant web browsers to enable visualization, collaboration and execution at various levels of the organization with zero client installation, zero maintenance and which enables users to securely troubleshoot plant equipment from any location, on any device at any time.

InTouch applications can be deployed remotely — no need to travel to install a new or updated InTouch application. Centralized application management via the Wonderware Integrated Development Environment (IDE), now included with InTouch, makes it easy to keep InTouch applications up-to-date and running trouble-free.

Virtualization is a hot topic today, and can save you a significant amount in convenience and hardware costs. No one in the industry offers more virtualization options than Wonderware, including the latest Microsoft® virtualization technology, Hyper-V and VMware. InTouch leverages Hyper-V and VMware so you can set up redundant HMI applications locally or at a remote site for more cost effective high availability and disaster recovery options.

> "I've found the Wonderware software to be light years ahead of other software. It was very simple to pick up on the programming. I would say that the Wonderware software has given us a 15 to 20% reduction in our downtime."
>
> — Jason Gitt,
> General Manager,
> PVC Compounders

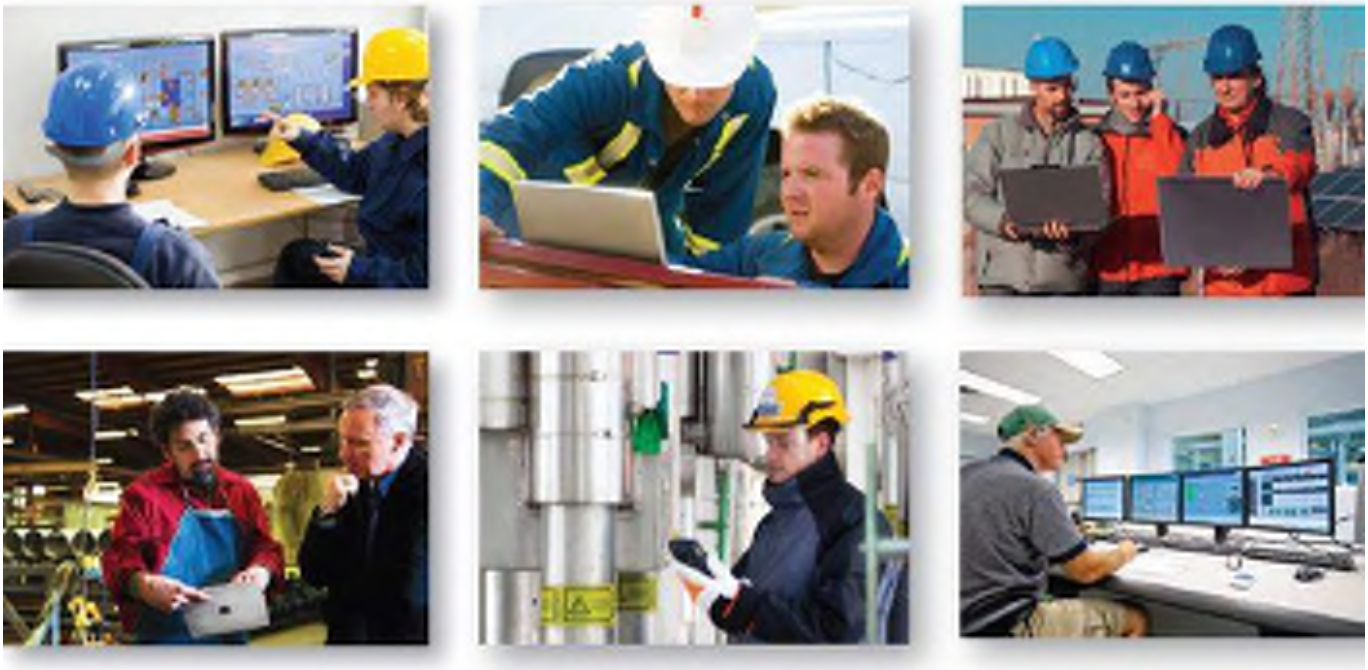

InTouch is Your Real-Time Window into Your Most Critical Processes

How can you make better real-time decisions if you don't have real-time data from your most important production processes? Wonderware InTouch has been helping industrial companies visualize their production processes in real-time since 1987.

Operators use InTouch to visualize and control vital plant processes in real-time.

Managers use InTouch to better understand what is occurring in their plants so they can take action when truly needed.

Engineers and other **technical workers** use InTouch to detect and troubleshoot problems in their processes.

Maintenance personnel can use InTouch to monitor critical equipment and machines that are starting to degrade so they can be better prepared to repair them when needed — reducing unscheduled downtime and maintenance costs.

Plant IT can use InTouch's visualization capabilities to create system diagnostic displays so they can maintain these critical applications more effectively.

UK Good Samaritan Station Battery

We propose to furnish one station battery system as follows:

1 – Battery Charger

LaMarche float battery charger/power supply, solid state, transistor controlled magnetic amplifier type with silicon diodes, DC voltage regulated for +/-10% AC line voltage variations, inherently current limiting, complete with AC and DC terminal boards, isolation transformer, and the following characteristics and accessories:

Model No: A12B-25-24V-A1
Nominal DC Amps: 25
Nominal DC Volts: 24
DC Output Regulation: +/- 0.5%
AC Input: 120/1/60
Battery Type: Nickel Cadmium
No. of Cells: 20
Filtering: 30 mv On/Off Battery
Mounting: Wall/Floor
Unit Weight: 135 lbs.
Dimensions: 15.375" W x 11" D x 23.75" H

1. Separate Float & Equalize Potentiometers
2. Float/Equalize Switch
3. Float & Equalize Lights
4. AC Power Failure Relay with Form "C" Contacts
5. AC Surge Suppressors
6. Two Pole AC Breaker
7. Two Pole DC Battery Breaker
8. Combined Alarm Package (52), including:
    A. Combination Digital Voltmeter/Ammeter with Selector Switch
    B. Equalize LED
    C. Low D.C. Current Alarm LED and two form "C" contacts
    D. High D.C. Voltage Alarm LED and two form "C" contacts
    E. Low D.C. Voltage Alarm LED and two form "C" contacts
    F. Critical (second) Low D.C. Voltage Alarm LED and two form "C" contacts
    G. High Voltage Shutdown Alarm LED and one form "C" contact
    H. A.C. Power Failure Alarm LED and two form "C" contacts
    I. Rectifier Failure/Summary Alarm Relay and two form "C" contacts
    J. Multi-mode Digital Equalize Timer, adjustable 1-144 hours with five selectable modes:
        1) Standard
        2) 7-day
        3) 14-day

4) 30-day
5) Equalize after low D.C. voltage condition

1 – Two Step Seismic Rack

Model: EQ1USSS002009001
Dimensions: 35.43” L x 29.13” W x 26.81” H
Weight: 500 lbs.(including batteries)

1 – Set 24V Nickel Cadmium Battery

Saft low maintenance nicad battery
Model: 5/UP1M125-4
No. of Cells: 20
Nominal Voltage: 24VDC

1 – 24V DC Panelboard

24VDC Panelboard, in Nema 1 wall mount enclosure

Uptimax Ni-Cd Battery

Maintenance-free solution for backup power applications

SAFT

Uptimax
The ideal choice for total security and availability

Saft – your trusted battery partner for stationary applications

Saft has over 100 years of experience working in partnership with leading industrial customers to deliver well-proven Ni-Cd battery solutions optimized to ensure the total security and availability of stationary applications including power backup, engine starting and bulk energy storage. Our R&D and engineering philosophy is focused on continual improvement of every aspect of our technologies and industrial processes, ensuring that all Saft products and components are designed and manufactured to the very highest quality standards. Saft's comprehensive global service provides expert support throughout every stage of your battery's life from initial concept through volume supply, installation and training to end of life recycling.

Uptimax ensures total reliability and long life – even at high temperatures

Saft's robust Ni-Cd technology set the benchmark for industrial batteries operating in difficult and demanding conditions. It has established a reputation for performance, reliability and a long, totally predictable, service life – with no risk of sudden death failure. Uptimax builds on this heritage by ensuring a 20-year plus service life at + 25°C (+ 77°F). Even at + 35°C (+ 95°F), its lifetime falls by just 20% compared with a 50% reduction for a lead-acid battery.

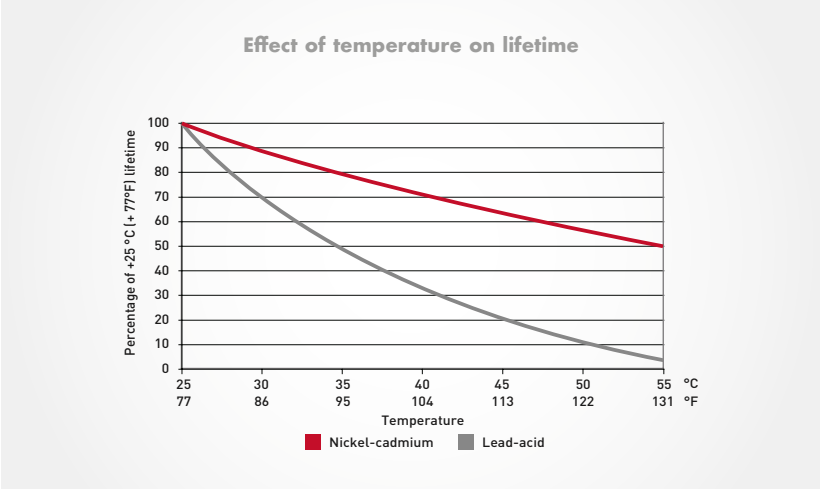

Uptimax
The 1st Ni-Cd battery for Plug & Play replacement of lead-acid

The perfect fit to replace lead-acid batteries:

The latest generation of Uptimax is the perfect fit to replace lead-acid batteries. Thanks to its 1.39 V/cell single level charge without the need for boost charge, Uptimax can be charged in all commonly used DC-systems with +/- 10% voltage window. This reduces the need for dropping diodes or DC/DC converters, and as a consequence it decreases the overall cost of DC-systems.

When a fast recharge is needed, 95% State-Of-Charge (SOC) in 8h can be reached at 1.45 V/cell for maximum availability after a power failure and minimum downtime.

Uptimax: The maintenance-free[1] battery for stationary applications

Uptimax is Saft's latest development in Ni-Cd pocket plate battery technology. It combines maintenance-free[1] operation with total reliability to provide the ideal backup power solution for industrial installations.

Together with other key features such as its low pressure flame arresting vent, high electrical performance and chargeability, Uptimax delivers an optimized TCO (Total Cost of Ownership).

(1) Maintenance-free means that no addition of water is necessary during the life time of the product when operating under Saft's recommended conditions.

Uptimax
Delivering high performance and maintenance-free operation

Maintenance-free[1] design reduces battery service costs

Uptimax is maintenance-free[1] thanks to a new high-tech design concept.

- Uptimax never needs water to be added throughout its entire service life (under Saft's recommended operating conditions - from - 20°C (- 4°F) to + 40°C (+ 104°F), at 1.39 V/cell).
- Maintenance is reduced to a minimum: only preventive maintenance is necessary.
- The high level of gas recombination is beyond the requirements of IEC 62259 (recombination level higher than 95%), and reduces water consumption and gas emissions.
- Uptimax is equiped with a low pressure flame arresting vent which operates as a valve regulated vent.

High performance optimizes battery life cost

Uptimax offers high performance. This enables installers to specify a battery optimized for their specific application, saving on initial purchase costs.

- Uptimax design enables high battery electrical performance whatever discharge time is needed.
- For cells stored up to 6 months a commissioning charge is not necessary and the cells are ready for immediate use.

Good chargeability minimizes battery downtime

Uptimax features fast and simple charging, within a narrow voltage window, for minimal downtime and maximum availability.

- Single or two-level charging regimes are possible:
  - Single level charge
    - 1.39 ± 0.01 V/cell
  - Two level charge
    - Float level: 1.39 ± 0.01 V/cell
    - High level: 1.45 ± 0.01 V/cell
- The fast recharge enables 95% SOC in 8h at 1.45 V/cell for maximum availability after a power failure, at + 20°C (+ 68°F).

(1) The term maintenance-free means that no addition of water is necessary during the life time of the product when operating under Saft's recommended conditions.

Uptimax
Developed for demanding industrial installations

Uptimax: Vital support for critical systems

Uptimax batteries are at the heart of power backup systems throughout the oil & gas exploration and production, utility and manufacturing industries. If mains power is lost, Uptimax delivers the vital power to ensure the continuity of mission-critical loads, facilitate safe shutdown processes, bridge to standby power and safeguard computer data. Typical power backup applications include: UPS, substation, switchgear, process control systems, emergency lighting, fire alarms and security systems.

Total reliability ensures the safe operation of your industrial equipment, in even the most demanding operating conditions

Uptimax provides complete peace of mind, whatever the application, whatever the location.

- Total reliability is based on a unique Ni-Cd electrochemistry/technology combined with the well proven Saft Nife® pocket plate design
- It enables a long service life of over 20 years at + 25°C (+ 77°F)
- Robust construction eliminates risk of sudden death failure
- Uptimax delivers long life and outstanding performance in temperatures up to + 40°C (+ 104°F) and tolerates - 40°C (- 40°F) to + 70°C (+ 158°F) for short durations.

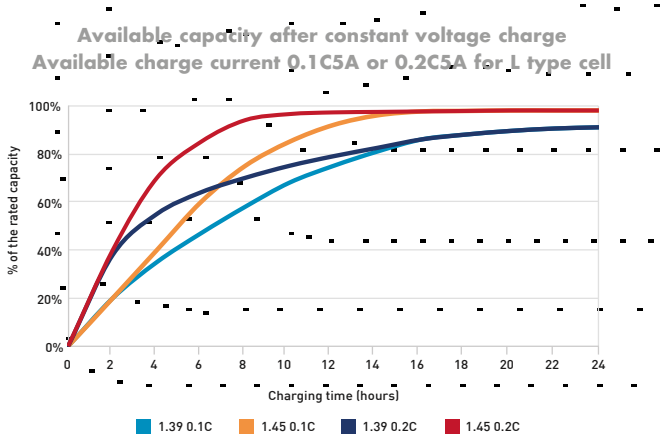

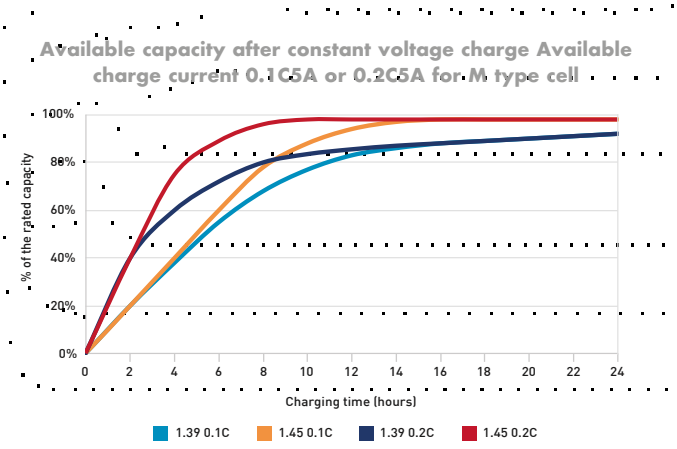

Uptimax
Modular approach based on flexible block configurations

Facilitates ease of handling, installation and operation

Uptimax batteries make transportation, installation and operation fast and easy.

- Batteries are only delivered filled with electrolyte and in electrically charged condition.
- Storage for up to 2 years in normal conditions is possible.
- Design enables batteries to be assembled in blocks of up to 10 cells connected in series.
- Flexible block configuration makes the battery easy and fast to install.

Uptimax construction features

Cells are welded together to form a rugged block up to 10 depending on cell size and type

Flexible configuration based on cell blocks

With single pole bolts

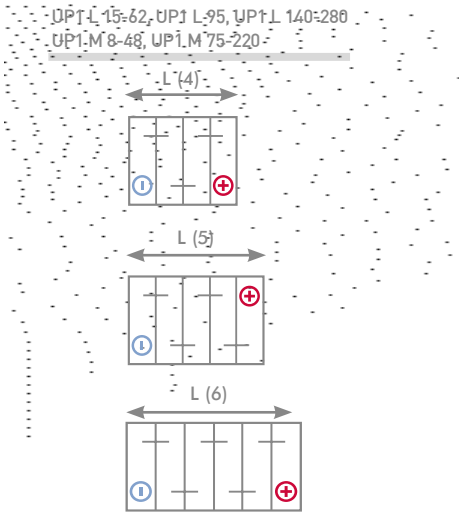

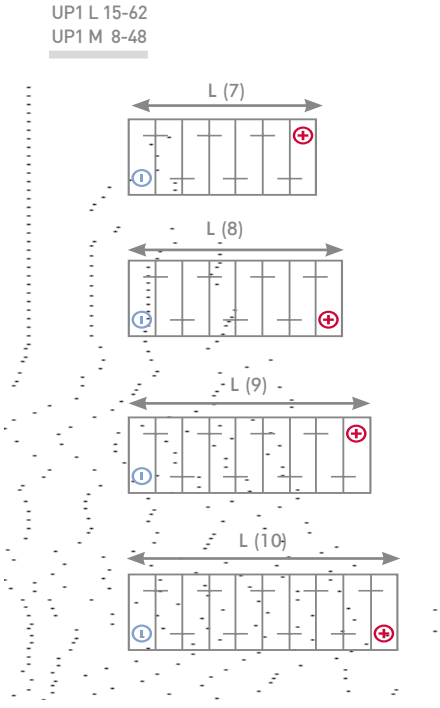

With double pole bolts

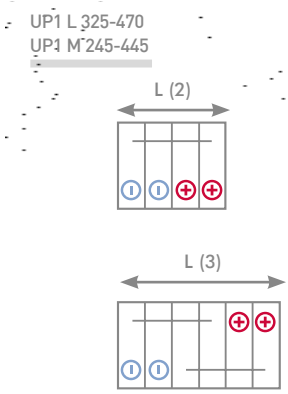

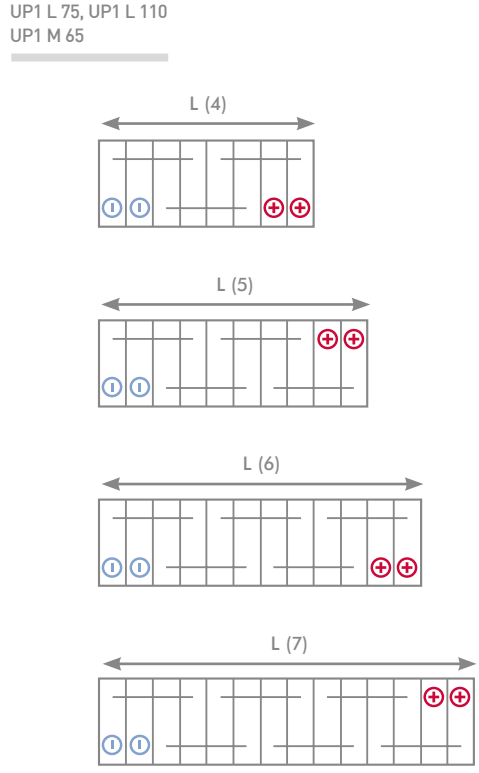

With 2-6 bolts per pole, crosswise mounted on racks

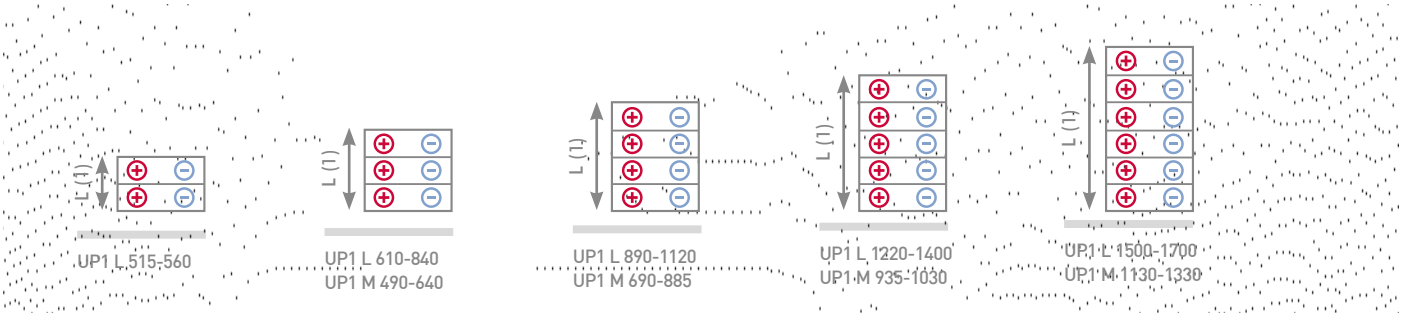

Uptimax
Easy to operate and install

A wide choice of capacity and performance

Uptimax cells are available in capacities from 8 – 1700 Ah in a choice of two ranges:

- UP1 L energy range, optimized for long discharge periods with a relatively low current
- UP1 M medium power range, specifically designed for mixed loads with varying current

Uptimax UP1 L
L type cell
Range of 34 cells
15 – 1700 Ah
For low rate discharges over long periods between 1 and 100 hours

Uptimax UP1 M
M type cell
Range of 38 cells
8 – 1330 Ah
For varied loads with low and high discharge rates, between 30 minutes and 3 hours

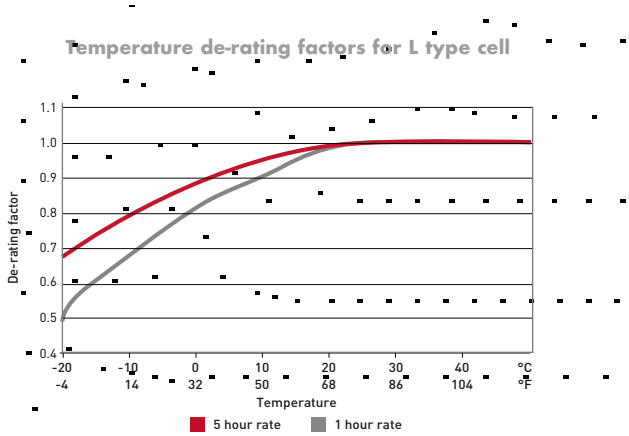

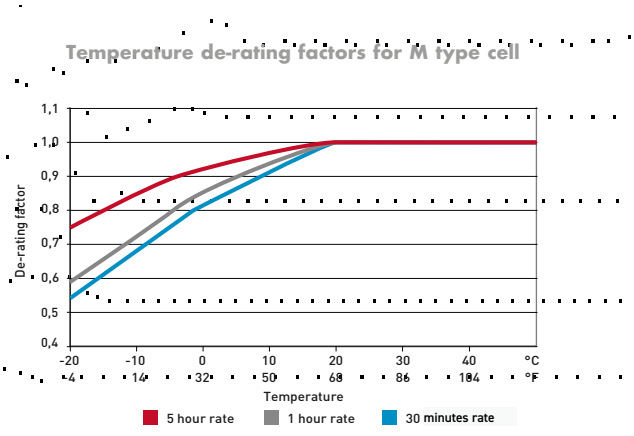

Uptimax
Designed with the highest standards

Uptimax batteries are designed in full compliance with the highest quality, safety and environmental standards

Electrical characteristics

- Certified IEC 62259 - Secondary cells and batteries containing alkaline or other non-acid electrolytes - Nickel-cadmium prismatic secondary single cells with partial gas recombination. Uptimax New Generation exceeds gas recombination requirements.
- Certified IEC 60623 - Secondary cells and batteries containing alkaline or other non-acid electrolytes - Vented nickel-cadmium prismatic rechargeable single cells.

Safety

- Complies with EN 50272-2/ IEC 62485-2 - Safety requirements for secondary batteries and battery installations - Part 2: Stationary batteries - The protective covers for terminals and connectors, the insulated cables are compliant with IP2 level protection against electrical shocks according to safety standard.

Quality

- ISO 9001 und ISO 14001
- Saft world class continuous programme

Environment & Recycling

- Fully recyclable
- RoHS – Although batteries and accumulators are not within the scope of the RoHS directive, Saft has taken voluntary measures to make sure that the substances forbidden by RoHS are not present in the battery, with the exception of the electro-chemical core.
- REACH - The Saft Group has adopted internal procedures to ensure conformity with the European REACH (Registration, Evaluation, Authorisation and Restriction of Chemical Substances) Regulation.

Saft offers total end to end application support

Saft's stationary battery experts can call upon a comprehensive range of skills and expertise to help our global customer specify the ideal battery solution for their particular application. Our end to end support starts at the design stage, such as advice on battery sizing, and carries customers through installation and commissioning.
Saft after-sales cover support, maintenance, diagnostic services as well as end of life recycling.
Saft organizes battery training seminars for consultants, engineering and maintenance departments.
To ensure that our customers receive the optimum service, wherever they are in the world, Saft is continuing to expand and enhance its network of approved service stations in the Middle East, Asia and North America.

Uptimax
Physical properties L range

Cell type	Capacity	Height		Width		Length per block														Approx. weight per cell		Internal resistance[1]	Cell connection bolt per pole
						4 cells		5 cells		6 cells		7 cells		8 cells		9 cells		10 cells					
	C_5 Ah	mm	in	mm	in	mm	in	mm	in	mm	in	mm	in	mm	in	mm	in	mm	in	kg	lb	mOhm	per pole
UP1 L 15	15	270	10,6	123	4,8	123	4,8	153	6,0	182	7,2	212	8,3	241	9,5	271	10,6	300	11,8	1,10	2,42	12,1	M6
UP1 L 30	30	270	10,6	123	4,8	143	5,6	178	7,0	212	8,3	247	9,7	281	11,1	316	12,4	350	13,8	1,80	3,96	6,03	M6
UP1 L 47	47	270	10,6	123	4,8	191	7,5	238	9,4	284	11,2	331	13,0	377	14,8	424	16,7	470	18,5	2,50	5,51	3,85	M6
UP1 L 62	62	270	10,6	123	4,8	239	9,4	298	11,7	356	14,0	415	16,3	473	18,6	532	20,9	590	23,2	3,20	7,05	2,92	M6
UP1 L 75	75	270	10,6	123	4,8	329	13,0	410	16,1	491	19,3	572	22,5	-	-	-	-	-	-	4,30	9,47	2,41	2 x M6
UP1 L 95	95	421	16,6	195	7,7	157	6,2	193	7,6	229	9,0	-	-	-	-	-	-	-	-	4,90	10,8	2,55	M8
UP1 L 110	110	270	10,6	123	4,8	425	16,7	530	20,9	635	25,0	740	29,1	-	-	-	-	-	-	5,70	12,5	1,65	2 x M6
UP1 L 140	140	421	16,6	195	7,7	205	8,1	253	10,0	301	11,9	-	-	-	-	-	-	-	-	6,70	14,7	1,73	M10
UP1 L 185	185	421	16,6	195	7,7	253	10,0	313	12,3	373	14,7	-	-	-	-	-	-	-	-	8,40	18,5	1,31	M10
UP1 L 235	235	421	16,6	195	7,7	305	12,0	378	14,9	451	17,8	-	-	-	-	-	-	-	-	9,90	21,8	1,03	M10
UP1 L 280	280	421	16,6	195	7,7	353	13,9	438	17,2	523	20,6	-	-	-	-	-	-	-	-	11,5	25,3	0,86	M10

Cell type	Capacity	Height		Width		Length per block						Approx. weight per cell		Internal resistance[1]	Cell connection bolt per pole
						1 cells		2 cells		3 cells					
	C_5 Ah	mm	in	mm	in	mm	in	mm	in	mm	in	kg	lb	mOhm	per pole
UP1 L 325	325	421	16,6	195	7,7	-	-	229	9,0	337	13,3	15,1	33,2	0,74	2 x M10
UP1 L 375	375	421	16,6	195	7,7	-	-	253	10,0	373	14,7	16,8	37,0	0,65	2 x M10
UP1 L 420	420	421	16,6	195	7,7	146	5,7	279	11,0	412	16,2	18,3	40,3	0,58	2 x M10
UP1 L 470	470	421	16,6	195	7,7	159	6,3	305	12,0	451	17,8	19,8	43,6	0,51	2 x M10
UP1 L 515	515	405	15,9	195	7,7	171	6,7	-	-	-	-	21,4	47,1	0,47	2 x M10
UP1 L 560	560	405	15,9	195	7,7	183	7,2	-	-	-	-	23,0	50,7	0,43	2 x M10
UP1 L 610	610	405	15,9	195	7,7	207	8,1	-	-	-	-	26,5	58,4	0,40	3 x M10
UP1 L 650	650	405	15,9	195	7,7	219	8,6	-	-	-	-	28,2	62,1	0,37	3 x M10
UP1 L 700	700	405	15,9	195	7,7	232	9,1	-	-	-	-	29,7	65,4	0,35	3 x M10
UP1 L 750	750	405	15,9	195	7,7	243	9,6	-	-	-	-	31,4	69,2	0,32	3 x M10
UP1 L 800	800	405	15,9	195	7,7	256	10,1	-	-	-	-	32,9	72,5	0,3	3 x M10
UP1 L 840	840	405	15,9	195	7,7	268	10,6	-	-	-	-	34,5	76,0	0,29	3 x M10
UP1 L 890	890	405	15,9	195	7,7	292	11,5	-	-	-	-	38,1	83,9	0,27	4 x M10
UP1 L 940	940	405	15,9	195	7,7	305	12,0	-	-	-	-	39,6	87,3	0,26	4 x M10
UP1 L 980	980	405	15,9	195	7,7	315	12,4	-	-	-	-	41,2	90,8	0,25	4 x M10
UP1 L 1030	1030	405	15,9	195	7,7	328	12,9	-	-	-	-	42,9	94,5	0,23	4 x M10
UP1 L 1120	1120	405	15,9	195	7,7	353	13,9	-	-	-	-	46,0	101,4	0,22	4 x M10
UP1 L 1220	1220	405	15,9	195	7,7	388	15,3	-	-	-	-	51,3	113,0	0,20	5 x M10
UP1 L 1300	1300	405	15,9	195	7,7	413	16,3	-	-	-	-	54,4	119,9	0,19	5 x M10
UP1 L 1400	1400	405	15,9	195	7,7	438	17,2	-	-	-	-	57,5	126,7	0,17	5 x M10
UP1 L 1500	1500	405	15,9	195	7,7	473	18,6	-	-	-	-	62,8	138,4	0,16	6 x M10
UP1 L 1600	1600	405	15,9	195	7,7	498	19,6	-	-	-	-	65,9	145,2	0,15	6 x M10
UP1 L 1700	1700	405	15,9	195	7,7	523	20,6	-	-	-	-	69,0	152,1	0,14	6 x M10

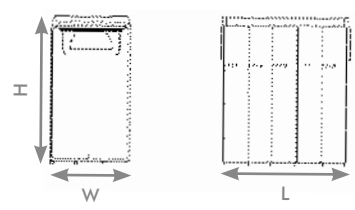

The block length and weight are determined by the number of cells in the block.
All tabulated dimensions are maximum values.

(1) Rigid connector included

Uptimax
Physical properties M range

Cell type	Capacity	Height		Width		Length per block														Approx. weight per cell		Internal resistance(1)	Cell connection bolt per pole
						4 cells		5 cells		6 cells		7 cells		8 cells		9 cells		10 cells					
	C_5 Ah	mm	in	mm	in	mm	in	mm	in	mm	in	mm	in	mm	in	mm	in	mm	in	kg	lb	mOhm	
UP1 M 8	8	270	10,6	123	4,8	123	4,8	153	6,0	182	7,2	212	8,3	241	9,5	271	10,6	300	11,8	1,10	2,42	12,5	M6
UP1 M 16	16	270	10,6	123	4,8	123	4,8	153	6,0	182	7,2	212	8,3	241	9,5	271	10,6	300	11,8	1,50	3,30	6,25	M6
UP1 M 24	24	270	10,6	123	4,8	143	5,6	178	7,0	212	8,3	247	9,7	281	11,1	316	12,4	350	13,8	1,80	3,96	4,17	M6
UP1 M 32	32	270	10,6	123	4,8	191	7,5	238	9,4	284	11,2	331	13,0	377	14,8	424	16,7	470	18,5	2,50	5,51	3,13	M6
UP1 M 40	40	270	10,6	123	4,8	239	9,4	298	11,7	356	14,0	415	16,3	473	18,6	532	20,9	590	23,2	3,20	7,05	2,50	M6
UP1 M 48	48	270	10,6	123	4,8	239	9,4	298	11,7	356	14,0	415	16,3	473	18,6	532	20,9	590	23,2	3,30	7,27	2,08	M6
UP1 M 65	65	270	10,6	123	4,8	377	14,8	470	18,5	563	22,2	656	25,8	-	-	-	-	-	-	5,00	11,0	1,54	2 x M6
UP1 M 75	75	421	16,6	195	7,7	157	6,2	193	7,6	229	9,0	-	-	-	-	-	-	-	-	4,90	10,8	1,52	M8
UP1 M 100	100	421	16,6	195	7,7	187	7,4	231	9,1	274	10,8	-	-	-	-	-	-	-	-	6,30	13,8	1,14	M8
UP1 M 125	125	421	16,6	195	7,7	229	9,0	283	11,1	337	13,3	-	-	-	-	-	-	-	-	7,60	16,7	0,91	M10
UP1 M 150	150	421	16,6	195	7,7	253	10,0	313	12,3	373	14,7	-	-	-	-	-	-	-	-	8,40	18,5	0,76	M10
UP1 M 170	170	421	16,6	195	7,7	305	12,0	378	14,9	451	17,8	-	-	-	-	-	-	-	-	9,90	21,8	0,67	M10
UP1 M 195	195	421	16,6	195	7,7	353	13,9	438	17,2	523	20,6	-	-	-	-	-	-	-	-	11,5	25,3	0,58	M10
UP1 M 220	220	421	16,6	195	7,7	353	13,9	438	17,2	523	20,6	-	-	-	-	-	-	-	-	12,0	26,4	0,52	M10

Cell type	Capacity	Height		Width		Length per block						Approx. weight per cell		Internal resistance(1)	Cell connection bolt per pole
						1 cells		2 cells		3 cells					
	C_5 Ah	mm	in	mm	in	mm	in	mm	in	mm	in	kg	lb	mOhm	
UP1 M 220	220	421	16,6	195	7,7	98	3,9	-	-	-	-	12,0	26,4	0,52	M10
UP1 M 245	245	421	16,6	195	7,7	-	-	229	9,0	337	13,3	15,2	33,5	0,47	2 x M10
UP1 M 270	270	421	16,6	195	7,7	127	5,0	241	9,5	355	14,0	16,0	35,2	0,42	2 x M10
UP1 M 295	295	421	16,6	195	7,7	133	5,2	253	10,0	373	14,7	16,8	37,0	0,39	2 x M10
UP1 M 320	320	421	16,6	195	7,7	-	-	279	11,0	412	16,2	18,3	40,3	0,36	2 x M10
UP1 M 345	345	421	16,6	195	7,7	159	6,3	305	12,0	451	17,8	19,8	43,6	0,33	2 x M10
UP1 M 370	370	421	16,6	195	7,7	-	-	329	13,0	487	19,2	21,4	47,1	0,31	2 x M10
UP1 M 395	395	421	16,6	195	7,7	-	-	353	13,9	523	20,6	23,0	50,7	0,29	2 x M10
UP1 M 420	420	421	16,6	195	7,7	-	-	353	13,9	523	20,6	23,5	51,8	0,27	2 x M10
UP1 M 445	445	421	16,6	195	7,7	-	-	353	13,9	523	20,6	24,0	52,9	0,26	2 x M10
UP1 M 490	490	405	15,9	195	7,7	219	8,6	-	-	-	-	28,2	62,1	0,23	3 x M10
UP1 M 540	540	405	15,9	195	7,7	243	9,6	-	-	-	-	31,4	69,2	0,21	3 x M10
UP1 M 590	590	405	15,9	195	7,7	268	10,6	-	-	-	-	34,5	76,0	0,19	3 x M10
UP1 M 640	640	405	15,9	195	7,7	268	10,6	-	-	-	-	35,5	78,2	0,18	3 x M10
UP1 M 690	690	405	15,9	195	7,7	305	12,0	-	-	-	-	39,6	87,3	0,17	4 x M10
UP1 M 740	740	405	15,9	195	7,7	328	12,9	-	-	-	-	42,9	94,5	0,15	4 x M10
UP1 M 785	785	405	15,9	195	7,7	353	13,9	-	-	-	-	46,0	101,4	0,15	4 x M10
UP1 M 835	835	405	15,9	195	7,7	341	13,4	-	-	-	-	45,9	101,1	0,14	4 x M10
UP1 M 885	885	405	15,9	195	7,7	353	13,9	-	-	-	-	48,0	105,8	0,13	4 x M10
UP1 M 935	935	405	15,9	195	7,7	413	16,3	-	-	-	-	54,4	119,9	0,12	5 x M10
UP1 M 985	985	405	15,9	195	7,7	438	17,2	-	-	-	-	57,5	126,7	0,12	5 x M10
UP1 M 1030	1030	405	15,9	195	7,7	413	16,3	-	-	-	-	56,4	124,3	0,11	5 x M10
UP1 M 1130	1130	405	15,9	195	7,7	498	19,6	-	-	-	-	65,9	145,2	0,10	6 x M10
UP1 M 1230	1230	405	15,9	195	7,7	492	19,4	-	-	-	-	67,6	149,0	0,09	6 x M10
UP1 M 1330	1330	405	15,9	195	7,7	523	20,6	-	-	-	-	72,0	158,7	0,09	6 x M10

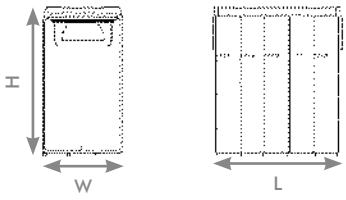

The block length and weight are determined by the number of cells in the block.
All tabulated dimensions are maximum values.

(1) Rigid connector included

Uptimax
Electrical performance L range

Final voltage: 1.00 V/cell

Performance after prolonged float charge of fully charged cells – Available Amperes at + 20°C ± 5°C (+ 68°F ± 9°F)

Cell type	C_5 Ah	Hours							Minutes							Seconds		
		10	8	5	3	2	1,5	1	45	30	20	15	10	5	1	30	5	1
UP1 L 15	15	1,56	1,93	3,00	4,80	6,43	7,59	9,30	10,5	12,1	13,6	14,4	15,4	17,1	19,5	21,3	26,2	29,3
UP1 L 30	30	3,12	3,86	6,00	9,60	12,9	15,2	18,6	21,0	24,3	27,2	28,9	30,9	34,1	39,1	42,6	52,4	58,6
UP1 L 47	47	4,89	6,05	9,40	15,0	20,1	23,8	29,1	32,9	38,0	42,6	45,2	48,3	53,5	61,2	66,7	82,0	91,8
UP1 L 62	62	6,45	7,98	12,4	19,8	26,6	31,4	38,4	43,4	50,1	56,2	59,6	63,8	70,5	80,8	88,0	108	121
UP1 L 75	75	7,80	9,66	15,0	24,0	32,1	37,9	46,5	52,5	60,6	68,0	72,1	77,1	85,3	97,7	106	131	146
UP1 L 95	95	9,87	12,2	19,0	30,6	39,8	45,6	53,6	58,6	65,2	71,0	75,2	79,2	87,4	87,4	95,7	113	124
UP1 L 110	110	11,4	14,2	22,0	35,2	47,1	55,6	68,2	77,0	88,9	99,7	106	113	125	143	156	192	215
UP1 L 140	140	14,6	18,1	28,0	45,1	58,7	67,2	79,0	86,4	96,0	105	111	117	129	129	141	166	182
UP1 L 185	185	19,2	23,9	37,0	59,6	77,5	88,8	104	114	127	138	147	154	170	170	186	220	241
UP1 L 235	235	24,4	30,3	47,0	75,7	98,5	113	133	145	161	176	186	196	216	216	237	279	306
UP1 L 280	280	29,1	36,1	56,0	90,2	117	134	158	173	192	209	222	234	257	258	282	333	365
UP1 L 325	325	33,8	41,9	65,0	105	136	156	183	201	223	243	257	271	299	299	327	386	423
UP1 L 375	375	39,0	48,3	75,0	121	157	180	212	232	257	280	297	313	345	345	378	446	489
UP1 L 420	420	43,7	54,2	84,0	135	176	202	237	259	288	314	333	350	386	386	423	499	547
UP1 L 470	470	48,8	60,6	94,0	151	197	226	265	290	322	351	372	392	432	432	473	559	612
UP1 L 515	515	53,5	66,4	103	166	216	247	290	318	353	385	408	430	474	474	519	612	671
UP1 L 560	560	58,2	72,2	112	180	235	269	316	346	384	418	444	467	515	515	564	666	730
UP1 L 610	610	63,4	78,6	122	196	256	293	344	377	418	456	483	509	561	561	614	725	795
UP1 L 650	650	67,6	83,8	130	209	272	312	367	401	446	486	515	542	598	598	655	773	847
UP1 L 700	700	72,8	90,3	140	225	293	336	395	432	480	523	554	584	644	644	705	832	912
UP1 L 750	750	77,9	96,7	150	242	314	360	423	463	515	560	594	626	690	690	755	891	977
UP1 L 800	800	83,1	103	160	258	335	384	451	494	549	598	634	667	736	736	806	951	1042
UP1 L 840	840	87,3	108	168	270	352	403	474	519	576	627	665	701	772	773	846	998	1094
UP1 L 890	890	92,5	115	178	287	373	427	502	549	611	665	705	742	818	819	896	1058	1159
UP1 L 940	940	97,7	121	188	303	394	451	530	580	645	702	744	784	864	865	947	1117	1225
UP1 L 980	980	102	126	196	316	411	470	553	605	672	732	776	817	901	902	987	1165	1277
UP1 L 1030	1030	107	133	206	332	432	494	581	636	707	769	816	859	947	948	1037	1224	1342
UP1 L 1120	1120	116	144	224	361	469	538	632	691	768	837	887	934	1030	1030	1128	1331	1459
UP1 L 1220	1220	127	157	244	393	511	586	688	753	837	911	966	1017	1122	1122	1229	1450	1589
UP1 L 1300	1300	135	168	260	419	545	624	733	803	892	971	1030	1084	1195	1196	1309	1545	1694
UP1 L 1400	1400	146	181	280	451	587	672	790	864	960	1046	1109	1168	1287	1288	1410	1664	1824
UP1 L 1500	1500	156	193	300	483	629	720	846	926	1029	1121	1188	1251	1379	1380	1511	1783	1954
UP1 L 1600	1600	166	206	320	515	670	768	902	988	1098	1195	1267	1334	1471	1472	1612	1902	2084
UP1 L 1700	1700	177	219	340	547	712	816	959	1049	1166	1270	1346	1418	1563	1564	1712	2021	2215

Final voltage: 1.05 V/cell

Performance after prolonged float charge of fully charged cells – Available Amperes at + 20°C ± 5°C (+ 68°F ± 9°F)

Cell type	C_5 Ah	Hours							Minutes							Seconds		
		10	8	5	3	2	1,5	1	45	30	20	15	10	5	1	30	5	1
UP1 L 15	15	1,56	1,91	2,91	4,29	5,53	6,39	7,81	8,83	10,2	11,4	12,0	13,0	14,8	16,4	17,9	22,1	24,6
UP1 L 30	30	3,12	3,83	5,82	8,58	11,1	12,8	15,6	17,7	20,4	22,8	24,1	26,1	29,7	32,7	35,8	44,2	49,2
UP1 L 47	47	4,89	5,99	9,12	13,4	17,3	20,0	24,5	27,7	32,0	35,6	37,7	40,8	46,5	51,3	56,2	69,2	77,1
UP1 L 62	62	6,45	7,91	12,0	17,7	22,9	26,4	32,3	36,5	42,2	47,0	49,7	53,9	61,3	67,6	74,1	91,3	102
UP1 L 75	75	7,80	9,56	14,6	21,5	27,7	32,0	39,1	44,1	51,0	56,9	60,1	65,1	74,2	81,8	89,6	110	123
UP1 L 95	95	9,77	12,0	18,8	27,7	34,7	39,3	44,8	48,5	53,4	58,1	59,9	63,2	69,3	73,4	79,6	94,5	103
UP1 L 110	110	11,4	14,0	21,3	31,5	40,6	46,9	57,3	64,7	74,8	83,4	88,2	95,5	109	120	131	162	180
UP1 L 140	140	14,4	17,8	27,7	40,8	51,1	57,9	66,0	71,5	78,6	85,6	88,2	93,1	102	108	117	139	152
UP1 L 185	185	19,0	23,5	36,6	54,0	67,5	76,5	87,2	94,5	104	113	117	123	135	143	155	184	201
UP1 L 235	235	24,2	29,8	46,4	68,5	85,8	97	111	120	132	144	148	156	172	181	197	234	255
UP1 L 280	280	28,8	35,5	55,3	81,7	102	116	132	143	157	171	176	186	204	216	235	279	304
UP1 L 325	325	33,4	41,2	64,2	94,8	119	134	153	166	183	199	205	216	237	251	272	323	353
UP1 L 375	375	38,6	47,5	74,1	109	137	155	177	192	211	229	236	249	274	290	314	373	407
UP1 L 420	420	43,2	53,3	83,0	123	153	174	198	215	236	257	265	279	307	324	352	418	456
UP1 L 470	470	48,3	59,6	92,9	137	172	194	222	240	264	287	296	313	343	363	394	468	511
UP1 L 515	515	53,0	65,3	102	150	188	213	243	263	289	315	325	343	376	398	431	512	560
UP1 L 560	560	57,6	71,0	111	163	204	231	264	286	314	342	353	373	409	432	469	557	608
UP1 L 610	610	62,7	77,3	121	178	223	252	288	312	343	373	384	406	445	471	511	607	663
UP1 L 650	650	66,9	82,4	128	190	237	269	306	332	365	397	410	432	474	502	545	647	706
UP1 L 700	700	72,0	88,8	138	204	256	289	330	358	393	428	441	466	511	541	586	696	761
UP1 L 750	750	77,1	95,1	148	219	274	310	354	383	421	459	473	499	547	579	628	746	815
UP1 L 800	800	82,3	101	158	233	292	331	377	409	449	489	504	532	584	618	670	796	869
UP1 L 840	840	86,4	107	166	245	307	347	396	429	472	514	529	559	613	649	704	836	913
UP1 L 890	890	91,5	113	176	260	325	368	420	455	500	544	561	592	650	687	746	885	967
UP1 L 940	940	96,7	119	186	274	343	389	443	480	528	575	592	625	686	726	787	935	1021
UP1 L 980	980	101	124	194	286	358	405	462	501	550	599	618	652	715	757	821	975	1065
UP1 L 1030	1030	106	131	204	300	376	426	486	526	578	630	649	685	752	795	863	1025	1119
UP1 L 1120	1120	115	142	221	327	409	463	528	572	629	685	706	745	818	865	938	1114	1217
UP1 L 1220	1220	125	155	241	356	445	504	575	623	685	746	769	812	891	942	1022	1214	1325
UP1 L 1300	1300	134	165	257	379	475	537	613	664	730	795	819	865	949	1004	1089	1293	1412
UP1 L 1400	1400	144	178	277	408	511	579	660	715	786	856	882	931	1022	1081	1173	1393	1521
UP1 L 1500	1500	154	190	296	438	548	620	707	766	842	917	945	998	1095	1158	1257	1492	1630
UP1 L 1600	1600	165	203	316	467	584	661	754	817	899	978	1008	1064	1168	1236	1340	1592	1738
UP1 L 1700	1700	175	216	336	496	621	703	802	868	955	1039	1071	1131	1241	1313	1424	1691	1847

Uptimax
Electrical performance L range

Final voltage: 1.10 V/cell

Performance after prolonged float charge of fully charged cells – Available Amperes at + 20°C ± 5°C (+ 68°F ± 9°F)

Cell type	C_5 Ah	Hours							Minutes							Seconds		
		10	8	5	3	2	1,5	1	45	30	20	15	10	5	1	30	5	1
UP1 L 15	15	1,50	1,83	2,68	3,69	4,66	5,37	6,38	6,96	7,89	8,72	9,26	10,1	11,5	12,7	14,1	17,4	19,2
UP1 L 30	30	3,00	3,67	5,37	7,39	9,32	10,7	12,8	13,9	15,8	17,4	18,5	20,1	23,0	25,5	28,2	34,8	38,5
UP1 L 47	47	4,70	5,75	8,41	11,6	14,6	16,8	20,0	21,8	24,7	27,3	29,0	31,5	36,0	39,9	44,1	54,5	60,3
UP1 L 62	62	6,20	7,58	11,1	15,3	19,3	22,2	26,4	28,8	32,6	36,0	38,3	41,6	47,5	52,6	58,2	71,9	79,5
UP1 L 75	75	7,50	9,17	13,4	18,5	23,3	26,9	31,9	34,8	39,4	43,6	46,3	50,3	57,5	63,7	70,4	87,0	96,2
UP1 L 95	95	9,50	11,7	17,4	24,0	29,0	31,9	35,9	38,5	42,7	46,1	48,2	50,7	54,6	60,1	65,7	77,9	84,1
UP1 L 110	110	11,0	13,4	19,7	27,1	34,2	39,4	46,8	51,1	57,9	64,0	67,9	73,7	84,3	93,4	103	128	141
UP1 L 140	140	14,0	17,2	25,7	35,3	42,7	46,9	52,9	56,7	63,0	68,0	71,1	74,7	80,4	88,6	96,8	115	124
UP1 L 185	185	18,5	22,8	33,9	46,7	56,4	62,0	69,8	75,0	83,2	89,8	93,9	98,7	106	117	128	152	164
UP1 L 235	235	23,5	28,9	43,1	59,3	71,7	78,8	88,7	95,3	106	114	119	125	135	149	162	193	208
UP1 L 280	280	28,0	34,5	51,4	70,6	85,4	93,9	106	113	126	136	142	149	161	177	194	230	248
UP1 L 325	325	32,5	40,0	59,6	82,0	99,1	109	123	132	146	158	165	173	187	206	225	267	288
UP1 L 375	375	37,5	46,2	68,8	94,6	114	126	142	152	169	182	190	200	215	237	259	308	332
UP1 L 420	420	42,0	51,7	77,0	106	128	141	159	170	189	204	213	224	241	266	290	345	372
UP1 L 470	470	47,0	57,9	86,2	119	143	158	177	191	211	228	239	251	270	298	325	386	416
UP1 L 515	515	51,5	63,4	94,5	130	157	173	194	209	232	250	261	275	296	326	356	423	456
UP1 L 560	560	56,0	69,0	103	141	171	188	211	227	252	272	284	299	322	355	387	459	496
UP1 L 610	610	61,0	75,1	112	154	186	205	230	247	274	296	310	325	350	386	422	500	540
UP1 L 650	650	65,0	80,0	119	164	198	218	245	263	292	316	330	347	373	412	449	533	575
UP1 L 700	700	70,0	86,2	128	177	213	235	264	284	315	340	355	373	402	443	484	574	620
UP1 L 750	750	75,0	92,3	138	189	229	252	283	304	337	364	381	400	431	475	518	615	664
UP1 L 800	800	80,0	98,5	147	202	244	268	302	324	360	389	406	427	460	506	553	656	708
UP1 L 840	840	84,0	103	154	212	256	282	317	340	378	408	426	448	483	532	581	689	743
UP1 L 890	890	89,0	110	163	224	271	298	336	361	400	432	452	475	511	563	615	730	788
UP1 L 940	940	94,0	116	172	237	287	315	355	381	423	457	477	502	540	595	650	771	832
UP1 L 980	980	98,0	121	180	247	299	329	370	397	441	476	498	523	563	620	677	804	867
UP1 L 1030	1030	103	127	189	260	314	345	389	417	463	500	523	550	592	652	712	845	912
UP1 L 1120	1120	112	138	205	282	342	376	423	454	504	544	569	598	644	709	774	919	991
UP1 L 1220	1220	122	150	224	308	372	409	461	495	549	592	619	651	701	772	843	1001	1080
UP1 L 1300	1300	130	160	238	328	396	436	491	527	585	631	660	694	747	823	899	1067	1151
UP1 L 1400	1400	140	172	257	353	427	469	529	567	630	680	711	747	804	886	968	1149	1239
UP1 L 1500	1500	150	185	275	378	457	503	566	608	675	728	762	800	862	950	1037	1231	1328
UP1 L 1600	1600	160	197	293	403	488	537	604	649	720	777	812	854	919	1013	1106	1313	1416
UP1 L 1700	1700	170	209	312	429	518	570	642	689	765	826	863	907	977	1076	1175	1395	1505

Final voltage: 1.14 V/cell

Performance after prolonged float charge of fully charged cells – Available Amperes at + 20°C ± 5°C (+ 68°F ± 9°F)

Cell type	C_5 Ah	Hours							Minutes							Seconds		
		10	8	5	3	2	1,5	1	45	30	20	15	10	5	1	30	5	1
UP1 L 15	15	1,41	1,66	2,26	3,02	3,69	4,14	4,82	5,44	6,16	6,79	7,25	7,79	8,62	10,1	11,3	14,0	15,3
UP1 L 30	30	2,82	3,32	4,53	6,04	7,38	8,28	9,65	10,9	12,3	13,6	14,5	15,6	17,2	20,2	22,6	27,9	30,6
UP1 L 47	47	4,42	5,21	7,09	9,45	11,6	13,0	15,1	17,0	19,3	21,3	22,7	24,4	27,0	31,6	35,3	43,7	48,0
UP1 L 62	62	5,83	6,87	9,35	12,5	15,3	17,1	19,9	22,5	25,5	28,1	30,0	32,2	35,6	41,7	46,6	57,7	63,3
UP1 L 75	75	7,05	8,31	11,3	15,1	18,5	20,7	24,1	27,2	30,8	34,0	36,3	38,9	43,1	50,4	56,4	69,8	76,6
UP1 L 95	95	9,03	10,7	14,8	18,7	22,3	24,7	27,6	29,6	32,3	35,1	37,5	40,3	45,6	47,3	52,5	62,4	66,4
UP1 L 110	110	10,3	12,2	16,6	22,1	27,1	30,4	35,4	39,9	45,2	49,8	53,2	57,1	63,2	74,0	82,7	102	112
UP1 L 140	140	13,3	15,8	21,8	27,5	32,9	36,4	40,7	43,6	47,6	51,7	55,3	59,5	67,3	69,8	77,4	91,9	97,8
UP1 L 185	185	17,6	20,9	28,9	36,4	43,5	48,1	53,8	57,6	62,9	68,3	73,0	78,6	88,9	92,2	102	121	129
UP1 L 235	235	22,3	26,6	36,7	46,2	55,2	61,1	68,4	73,1	79,9	86,7	92,7	100	113	117	130	154	164
UP1 L 280	280	26,6	31,7	43,7	55,1	65,8	72,8	81,5	87,2	95,2	103	111	119	135	140	155	184	196
UP1 L 325	325	30,9	36,8	50,7	63,9	76,4	84,5	94,6	101	111	120	128	138	156	162	180	213	227
UP1 L 375	375	35,6	42,4	58,5	73,8	88,1	97,5	109	117	128	138	148	159	180	187	207	246	262
UP1 L 420	420	39,9	47,5	65,5	82,6	98,7	109	122	131	143	155	166	178	202	209	232	276	294
UP1 L 470	470	44,7	53,2	73,3	92,4	110	122	137	146	160	173	185	200	226	234	260	308	328
UP1 L 515	515	48,9	58,3	80,3	101	121	134	150	160	175	190	203	219	247	257	285	338	360
UP1 L 560	560	53,2	63,4	87,4	110	132	146	163	174	190	207	221	238	269	279	310	368	391
UP1 L 610	610	58,0	69,0	95,2	120	143	159	178	190	207	225	241	259	293	304	337	400	426
UP1 L 650	650	61,8	73,5	101	128	153	169	189	202	221	240	257	276	312	324	359	427	454
UP1 L 700	700	66,5	79,2	109	138	165	182	204	218	238	258	276	297	336	349	387	459	489
UP1 L 750	750	71,3	84,8	117	148	176	195	218	233	255	277	296	319	360	374	415	492	524
UP1 L 800	800	76,0	90,5	125	157	188	208	233	249	272	295	316	340	384	399	442	525	559
UP1 L 840	840	79,8	95,0	131	165	197	218	244	261	286	310	332	357	404	419	465	551	587
UP1 L 890	890	84,6	101	139	175	209	231	259	277	303	328	351	378	428	444	492	584	622
UP1 L 940	940	89,3	106	147	185	221	244	274	293	320	347	371	399	452	468	520	617	657
UP1 L 980	980	93,1	111	153	193	230	255	285	305	333	362	387	416	471	488	542	643	685
UP1 L 1030	1030	97,9	117	161	203	242	268	300	321	350	380	407	437	495	513	570	676	720
UP1 L 1120	1120	106	127	175	220	263	291	326	349	381	413	442	476	538	558	619	735	783
UP1 L 1220	1220	116	138	190	240	287	317	355	380	415	450	482	518	586	608	675	801	853
UP1 L 1300	1300	124	147	203	256	306	338	378	405	442	480	513	552	625	648	719	853	909
UP1 L 1400	1400	133	158	218	275	329	364	407	436	476	517	553	595	673	698	774	919	978
UP1 L 1500	1500	143	170	234	295	353	390	437	467	510	554	592	637	721	748	830	985	1048
UP1 L 1600	1600	152	181	250	315	376	416	466	498	544	590	631	680	769	797	885	1050	1118
UP1 L 1700	1700	162	192	265	334	400	442	495	529	578	627	671	722	817	847	940	1116	1188

Uptimax
Electrical performance M range

Final voltage: 1.00 V/cell

Performance after prolonged float charge of fully charged cells – Available Amperes at + 20°C ± 5°C (+ 68°F ± 9°F)

Cell type	C_5 Ah	Hours							Minutes							Seconds		
		10	8	5	3	2	1,5	1	45	30	20	15	10	5	1	30	5	1
UP1 M 8	8	0,83	1,03	1,60	2,64	3,83	5,01	7,26	8,53	10,2	11,8	13,0	14,9	17,5	18,9	20,6	25,2	28,3
UP1 M 16	16	1,66	2,05	3,20	5,28	7,66	10,0	14,5	17,1	20,3	23,5	26,0	29,7	35,0	37,7	41,2	50,4	56,6
UP1 M 24	24	2,49	3,08	4,80	7,92	11,5	15,0	21,8	25,6	30,5	35,3	39,0	44,6	52,6	56,6	61,8	75,6	85,0
UP1 M 32	32	3,32	4,10	6,40	10,6	15,3	20,1	29,0	34,1	40,6	47,1	52,0	59,4	70,1	75,4	82,4	101	113
UP1 M 40	40	4,14	5,13	8,00	13,2	19,2	25,1	36,3	42,7	50,8	58,8	64,9	74,3	87,6	94,0	103	126	142
UP1 M 48	48	4,97	6,15	9,60	15,8	23,0	30,1	43,5	51,2	61,0	70,6	77,9	89,2	105	113	124	151	170
UP1 M 65	65	6,73	8,33	13,0	21,5	31,1	40,7	59,0	69,3	82,5	95,6	106	121	142	153	167	205	230
UP1 M 75	75	7,74	9,58	15,0	24,5	36,0	47,1	67,9	80,1	94,2	106	114	126	140	146	155	176	189
UP1 M 100	100	10,3	12,8	20,0	32,7	48,0	62,7	90,5	107	126	142	152	167	186	194	206	235	252
UP1 M 125	125	12,9	16,0	25,0	40,8	59,9	78,4	113	134	157	177	190	209	233	243	258	294	315
UP1 M 150	150	15,5	19,2	30,0	49,0	71,9	94,1	136	160	188	212	228	251	279	291	310	353	378
UP1 M 170	170	17,5	21,7	34,0	55,5	81,5	107	154	182	214	241	258	285	317	330	351	400	429
UP1 M 195	195	20,1	24,9	39,0	63,7	93,5	122	176	208	245	276	296	326	363	378	402	458	492
UP1 M 220	220	22,7	28,1	44,0	71,9	105	138	199	235	276	312	334	368	410	427	454	517	555
UP1 M 245	245	25,3	31,3	49,0	80,0	117	154	222	262	308	347	372	410	456	476	506	576	618
UP1 M 270	270	27,9	34,5	54,0	88,2	129	169	244	288	339	382	410	452	503	524	557	635	681
UP1 M 295	295	30,4	37,7	59,0	96,4	141	185	267	315	371	418	448	494	549	573	609	694	744
UP1 M 320	320	33,0	40,9	64,0	105	153	201	290	342	402	453	486	536	596	621	660	752	807
UP1 M 345	345	35,6	44,1	69,0	113	165	216	312	368	433	489	524	578	642	670	712	811	870
UP1 M 370	370	38,2	47,3	74,0	121	177	232	335	395	465	524	562	619	689	718	764	870	933
UP1 M 395	395	40,8	50,5	79,0	129	189	248	357	422	496	559	600	661	736	767	815	929	996
UP1 M 420	420	43,3	53,6	84,0	137	201	263	380	449	528	595	638	703	782	815	867	987	1059
UP1 M 445	445	45,9	56,8	89,0	145	213	279	403	475	559	630	676	745	829	864	918	1046	1122
UP1 M 490	490	50,6	62,6	98,0	160	235	307	443	523	615	694	745	820	912	951	1011	1152	1236
UP1 M 540	540	55,7	69,0	108	176	259	339	489	577	678	765	821	904	1006	1048	1114	1269	1362
UP1 M 590	590	60,9	75,4	118	193	283	370	534	630	741	835	897	988	1099	1145	1218	1387	1488
UP1 M 640	640	66,0	81,7	128	209	307	401	579	684	804	906	973	1071	1192	1242	1321	1505	1614
UP1 M 690	690	71,2	88,1	138	225	331	433	624	737	867	977	1049	1155	1285	1339	1424	1622	1740
UP1 M 740	740	76,4	94,5	148	242	355	464	670	790	929	1048	1125	1239	1378	1436	1527	1740	1866
UP1 M 785	785	81,0	100	157	256	376	492	710	838	986	1112	1193	1314	1462	1524	1620	1845	1980
UP1 M 835	835	86,2	107	167	273	400	524	756	892	1049	1182	1269	1398	1555	1621	1723	1963	2106
UP1 M 885	885	91,3	113	177	289	424	555	801	945	1112	1253	1345	1481	1648	1718	1827	2081	2232
UP1 M 935	935	96,5	119	187	305	448	587	846	999	1174	1324	1421	1565	1741	1815	1930	2198	2358
UP1 M 985	985	102	126	197	322	472	618	891	1052	1237	1395	1497	1649	1834	1912	2033	2316	2484
UP1 M 1030	1030	106	132	206	336	494	646	932	1100	1294	1458	1566	1724	1918	1999	2126	2421	2597
UP1 M 1130	1130	117	144	226	369	542	709	1023	1207	1419	1600	1718	1892	2104	2193	2332	2657	2850
UP1 M 1230	1230	127	157	246	402	590	772	1113	1314	1545	1742	1870	2059	2290	2387	2539	2892	3102
UP1 M 1330	1330	137	170	266	434	638	834	1204	1420	1670	1883	2022	2226	2477	2581	2745	3127	3354

Final voltage: 1.05 V/cell

Performance after prolonged float charge of fully charged cells – Available Amperes at + 20°C ± 5°C (+ 68°F ± 9°F)

Cell type	C_5 Ah	Hours							Minutes							Seconds		
		10	8	5	3	2	1,5	1	45	30	20	15	10	5	1	30	5	1
UP1 M 8	8	0,83	1,02	1,59	2,63	3,78	4,90	6,24	7,51	8,67	10,0	10,8	11,9	14,3	15,7	17,3	21,2	23,9
UP1 M 16	16	1,65	2,04	3,18	5,25	7,57	9,79	12,5	15,0	17,3	19,9	21,5	23,8	28,6	31,4	34,6	42,5	47,7
UP1 M 24	24	2,48	3,06	4,77	7,88	11,4	14,7	18,7	22,5	26,0	29,9	32,3	35,6	43,0	47,1	51,9	63,7	71,6
UP1 M 32	32	3,30	4,08	6,36	10,5	15,1	19,6	25,0	30,0	34,7	39,9	43,0	47,5	57,3	62,8	69,2	85,0	95,4
UP1 M 40	40	4,13	5,11	7,94	13,1	18,9	24,5	31,2	37,6	43,3	49,8	53,8	59,4	71,6	78,5	86,5	106	119
UP1 M 48	48	4,95	6,13	9,53	15,8	22,7	29,4	37,4	45,1	52,0	59,8	64,5	71,3	85,9	94,2	104	127	143
UP1 M 65	65	6,71	8,30	12,9	21,3	30,7	39,8	50,7	61,0	70,4	81,0	87,4	96,5	116	128	141	173	194
UP1 M 75	75	7,65	9,55	14,9	24,3	35,5	46,0	60,0	69,0	78,8	87,8	93,6	102	114	123	131	149	160
UP1 M 100	100	10,2	12,7	19,9	32,4	47,4	61,3	80,0	92,0	105	117	125	136	153	163	175	199	213
UP1 M 125	125	12,8	15,9	24,9	40,5	59,2	76,7	100	115	131	146	156	170	191	204	219	249	266
UP1 M 150	150	15,3	19,1	29,9	48,6	71,0	92,0	120	138	158	176	187	204	229	245	262	298	319
UP1 M 170	170	17,3	21,6	33,8	55,0	80,5	104	136	156	179	199	212	232	259	278	297	338	362
UP1 M 195	195	19,9	24,8	38,8	63,1	92,3	120	156	179	205	228	243	266	298	319	341	388	415
UP1 M 220	220	22,4	28,0	43,8	71,2	104	135	176	202	231	257	275	300	336	360	385	437	468
UP1 M 245	245	25,0	31,2	48,8	79,3	116	150	196	225	257	287	306	334	374	401	428	487	521
UP1 M 270	270	27,5	34,4	53,8	87,4	128	166	216	248	284	316	337	368	412	441	472	537	575
UP1 M 295	295	30,1	37,5	58,7	95,5	140	181	236	271	310	345	368	402	450	482	516	587	628
UP1 M 320	320	32,6	40,7	63,7	104	152	196	256	294	336	374	399	436	488	523	559	636	681
UP1 M 345	345	35,2	43,9	68,7	112	163	212	276	317	362	404	431	470	526	564	603	686	734
UP1 M 370	370	37,7	47,1	73,7	120	175	227	296	340	389	433	462	504	565	605	647	736	788
UP1 M 395	395	40,3	50,3	78,6	128	187	242	316	363	415	462	493	538	603	646	691	785	841
UP1 M 420	420	42,8	53,5	83,6	136	199	258	336	386	441	491	524	572	641	687	734	835	894
UP1 M 445	445	45,4	56,6	88,6	144	211	273	356	409	467	521	555	606	679	727	778	885	947
UP1 M 490	490	50,0	62,4	97,6	159	232	301	392	451	515	573	612	667	748	801	857	974	1043
UP1 M 540	540	55,1	68,7	108	175	256	331	432	497	567	632	674	735	824	883	944	1074	1149
UP1 M 590	590	60,2	75,1	117	191	279	362	472	543	620	690	736	804	900	965	1031	1173	1256
UP1 M 640	640	65,3	81,5	127	207	303	393	512	589	672	749	799	872	977	1046	1119	1273	1362
UP1 M 690	690	70,4	87,8	137	223	327	423	552	635	725	807	861	940	1053	1128	1206	1372	1469
UP1 M 740	740	75,5	94,2	147	240	350	454	592	681	777	866	924	1008	1129	1210	1294	1471	1575
UP1 M 785	785	80,1	100	156	254	372	481	628	722	824	918	980	1069	1198	1283	1372	1561	1671
UP1 M 835	835	85,2	106	166	270	395	512	668	768	877	977	1042	1137	1274	1365	1460	1660	1777
UP1 M 885	885	90,3	113	176	286	419	543	708	814	929	1035	1104	1205	1351	1447	1547	1760	1884
UP1 M 935	935	95,4	119	186	303	443	573	748	860	982	1094	1167	1273	1427	1529	1635	1859	1990
UP1 M 985	985	100	125	196	319	466	604	788	906	1034	1152	1229	1342	1503	1610	1722	1959	2097
UP1 M 1030	1030	105	131	205	333	488	632	824	948	1082	1205	1285	1403	1572	1684	1801	2048	2192
UP1 M 1130	1130	115	144	225	366	535	693	904	1040	1187	1322	1410	1539	1724	1847	1975	2247	2405
UP1 M 1230	1230	125	157	245	398	582	754	984	1132	1292	1439	1535	1675	1877	2011	2150	2446	2618
UP1 M 1330	1330	136	169	265	430	630	816	1064	1224	1397	1556	1660	1811	2030	2174	2325	2645	2831

Uptimax
Electrical performance M range

Final voltage: 1.10 V/cell

Performance after prolonged float charge of fully charged cells – Available Amperes at + 20°C ± 5°C (+ 68°F ± 9°F)

Cell type	C_5 Ah	Hours							Minutes							Seconds		
		10	8	5	3	2	1,5	1	45	30	20	15	10	5	1	30	5	1
UP1 M 8	8	0,82	1,02	1,58	2,56	3,53	4,30	5,45	6,15	6,88	7,91	8,53	9,39	11,0	13,0	14,3	17,5	19,6
UP1 M 16	16	1,64	2,03	3,16	5,12	7,07	8,59	10,9	12,3	13,8	15,8	17,1	18,8	22,0	26,0	28,6	35,0	39,2
UP1 M 24	24	2,46	3,05	4,75	7,68	10,6	12,9	16,4	18,5	20,6	23,7	25,6	28,2	32,9	38,9	42,9	52,5	58,8
UP1 M 32	32	3,28	4,07	6,33	10,2	14,1	17,2	21,8	24,6	27,5	31,7	34,1	37,5	43,9	51,9	57,2	70,0	78,4
UP1 M 40	40	4,10	5,09	7,91	12,8	17,7	21,5	27,3	30,8	34,4	39,6	42,7	46,9	54,9	64,9	71,5	87,5	98,0
UP1 M 48	48	4,92	6,10	9,49	15,4	21,2	25,8	32,7	36,9	41,3	47,5	51,2	56,3	65,9	77,9	85,8	105	118
UP1 M 65	65	6,66	8,26	12,9	20,8	28,7	34,9	44,3	50,0	55,9	64,3	69,3	76,3	89,2	105	116	142	159
UP1 M 75	75	7,57	9,38	14,7	23,7	33,4	40,9	51,0	56,0	62,7	68,6	73,5	79,7	89,7	102	109	125	133
UP1 M 100	100	10,1	12,5	19,6	31,5	44,5	54,5	68,0	74,7	83,6	91,5	98,0	106	120	135	146	166	177
UP1 M 125	125	12,6	15,6	24,5	39,4	55,6	68,2	85,0	93,3	105	114	123	133	150	169	182	208	221
UP1 M 150	150	15,1	18,8	29,4	47,3	66,8	81,8	102	112	125	137	147	159	179	203	219	249	265
UP1 M 170	170	17,2	21,3	33,3	53,6	75,7	92,7	116	127	142	156	167	181	203	230	248	283	300
UP1 M 195	195	19,7	24,4	38,2	61,5	86,8	106	133	146	163	178	191	207	233	264	284	324	345
UP1 M 220	220	22,2	27,5	43,1	69,4	97,9	120	150	164	184	201	216	234	263	298	321	366	389
UP1 M 245	245	24,7	30,6	48,0	77,3	109	134	167	183	205	224	240	260	293	332	357	407	433
UP1 M 270	270	27,2	33,8	52,9	85,1	120	147	184	202	226	247	265	287	323	365	394	449	477
UP1 M 295	295	29,8	36,9	57,8	93,0	131	161	201	220	247	270	289	313	353	399	430	490	521
UP1 M 320	320	32,3	40,0	62,7	101	142	175	218	239	268	293	314	340	383	433	467	532	566
UP1 M 345	345	34,8	43,1	67,6	109	154	188	235	258	288	316	338	366	413	467	503	574	610
UP1 M 370	370	37,3	46,3	72,5	117	165	202	252	276	309	339	363	393	443	501	540	615	654
UP1 M 395	395	39,9	49,4	77,4	125	176	215	269	295	330	361	387	420	473	535	576	657	698
UP1 M 420	420	42,4	52,5	82,3	132	187	229	286	314	351	384	412	446	503	568	613	698	742
UP1 M 445	445	44,9	55,6	87,2	140	198	243	303	332	372	407	436	473	532	602	649	740	787
UP1 M 490	490	49,4	61,3	96,0	155	218	267	333	366	410	448	480	520	586	663	715	815	866
UP1 M 540	540	54,5	67,5	106	170	240	294	367	403	451	494	529	574	646	731	788	898	954
UP1 M 590	590	59,5	73,8	116	186	263	322	401	441	493	540	578	627	706	799	861	981	1043
UP1 M 640	640	64,6	80,0	125	202	285	349	435	478	535	586	627	680	766	866	934	1064	1131
UP1 M 690	690	69,6	86,3	135	218	307	376	469	515	577	631	676	733	826	934	1006	1147	1220
UP1 M 740	740	74,7	92,5	145	233	329	404	503	553	619	677	725	786	885	1002	1079	1230	1308
UP1 M 785	785	79,2	98,1	154	248	349	428	534	586	656	718	769	834	939	1063	1145	1305	1387
UP1 M 835	835	84,3	104	164	263	372	455	568	623	698	764	818	887	999	1130	1218	1388	1476
UP1 M 885	885	89,3	111	173	279	394	483	602	661	740	810	867	940	1059	1198	1291	1471	1564
UP1 M 935	935	94,4	117	183	295	416	510	636	698	782	856	916	993	1119	1266	1364	1554	1653
UP1 M 985	985	99,4	123	193	311	438	537	670	735	823	901	965	1046	1179	1333	1437	1637	1741
UP1 M 1030	1030	104	129	202	325	458	562	700	769	861	942	1009	1094	1233	1394	1502	1712	1820
UP1 M 1130	1130	114	141	221	356	503	616	768	844	945	1034	1107	1200	1352	1529	1648	1878	1997
UP1 M 1230	1230	124	154	241	388	547	671	836	918	1028	1125	1205	1306	1472	1665	1794	2045	2174
UP1 M 1330	1330	134	166	261	419	592	725	904	993	1112	1217	1303	1413	1591	1800	1940	2211	2351

Final voltage: 1.14 V/cell

Performance after prolonged float charge of fully charged cells – Available Amperes at + 20°C ± 5°C (+ 68°F ± 9°F)

Cell type	C_5 Ah	Hours							Minutes							Seconds		
		10	8	5	3	2	1,5	1	45	30	20	15	10	5	1	30	5	1
UP1 M 8	8	0,80	0,99	1,53	2,38	3,01	3,44	4,25	4,76	5,36	6,12	6,56	7,34	8,50	10,4	11,5	14,3	15,5
UP1 M 16	16	1,59	1,97	3,06	4,76	6,02	6,87	8,50	9,53	10,7	12,2	13,1	14,7	17,0	20,7	23,0	28,5	31,0
UP1 M 24	24	2,39	2,96	4,59	7,14	9,03	10,3	12,8	14,3	16,1	18,4	19,7	22,0	25,5	31,1	34,4	42,8	46,5
UP1 M 32	32	3,18	3,95	6,12	9,53	12,0	13,7	17,0	19,1	21,4	24,5	26,2	29,4	34,0	41,5	45,9	57,1	62,0
UP1 M 40	40	3,98	4,94	7,66	11,9	15,0	17,2	21,3	23,8	26,8	30,6	32,8	36,7	42,5	51,8	57,4	71,3	77,5
UP1 M 48	48	4,78	5,92	9,19	14,3	18,1	20,6	25,5	28,6	32,2	36,7	39,4	44,1	51,0	62,2	68,9	85,6	93,0
UP1 M 65	65	6,47	8,02	12,4	19,3	24,4	27,9	34,5	38,7	43,6	49,7	53,3	59,7	69,1	84,2	93,3	116	126
UP1 M 75	75	7,37	9,10	14,1	22,4	29,2	33,7	39,0	43,8	48,8	54,0	57,0	62,1	71,2	81,0	87,5	100	106
UP1 M 100	100	9,82	12,1	18,8	29,8	38,9	44,9	52,0	58,4	65,0	72,0	76,0	82,8	95,0	108	117	134	141
UP1 M 125	125	12,3	15,2	23,5	37,3	48,6	56,1	65,0	73,0	81,3	90,0	95,0	104	119	135	146	167	177
UP1 M 150	150	14,7	18,2	28,2	44,7	58,4	67,3	78,0	87,6	97,5	108	114	124	142	162	175	201	212
UP1 M 170	170	16,7	20,6	32,0	50,7	66,1	76,3	88,4	99,3	111	122	129	141	161	184	198	228	240
UP1 M 195	195	19,1	23,7	36,7	58,1	75,9	87,5	101	114	127	140	148	161	185	211	227	261	276
UP1 M 220	220	21,6	26,7	41,4	65,6	85,6	98,7	114	128	143	158	167	182	209	238	257	295	311
UP1 M 245	245	24,1	29,7	46,1	73,0	95,3	110	127	143	159	176	186	203	233	265	286	328	346
UP1 M 270	270	26,5	32,8	50,8	80,5	105	121	140	158	176	194	205	224	256	292	315	362	382
UP1 M 295	295	29,0	35,8	55,5	87,9	115	132	153	172	192	212	224	244	280	319	344	395	417
UP1 M 320	320	31,4	38,8	60,2	95,4	124	144	166	187	208	230	243	265	304	346	373	429	452
UP1 M 345	345	33,9	41,9	64,9	103	134	155	179	201	224	248	262	286	328	373	402	462	488
UP1 M 370	370	36,3	44,9	69,6	110	144	166	192	216	241	266	281	306	351	400	432	495	523
UP1 M 395	395	38,8	47,9	74,3	118	154	177	205	231	257	284	300	327	375	427	461	529	558
UP1 M 420	420	41,2	51,0	79,0	125	163	188	218	245	273	302	319	348	399	454	490	562	594
UP1 M 445	445	43,7	54,0	83,7	133	173	200	231	260	289	320	338	368	423	481	519	596	629
UP1 M 490	490	48,1	59,5	92,1	146	191	220	255	286	319	353	372	406	465	529	571	656	692
UP1 M 540	540	53,0	65,5	102	161	210	242	281	315	351	389	410	447	513	583	630	723	763
UP1 M 590	590	57,9	71,6	111	176	230	265	307	345	384	425	448	489	560	637	688	790	834
UP1 M 640	640	62,8	77,7	120	191	249	287	333	374	416	461	486	530	608	691	746	857	904
UP1 M 690	690	67,8	83,7	130	206	268	310	359	403	449	497	524	571	655	745	805	924	975
UP1 M 740	740	72,7	89,8	139	221	288	332	385	432	481	533	562	613	703	799	863	991	1046
UP1 M 785	785	77,1	95,3	148	234	305	352	408	458	510	565	597	650	745	848	916	1051	1109
UP1 M 835	835	82,0	101	157	249	325	375	434	488	543	601	635	691	793	902	974	1118	1180
UP1 M 885	885	86,9	107	166	264	344	397	460	517	575	637	673	733	840	956	1032	1185	1251
UP1 M 935	935	91,8	113	176	279	364	420	486	546	608	673	711	774	888	1010	1091	1252	1321
UP1 M 985	985	96,7	120	185	294	383	442	512	575	640	709	749	816	935	1064	1149	1319	1392
UP1 M 1030	1030	101	125	194	307	401	462	536	602	670	742	783	853	978	1112	1201	1379	1456
UP1 M 1130	1130	111	137	212	337	440	507	588	660	735	814	859	936	1073	1220	1318	1513	1597
UP1 M 1230	1230	121	149	231	367	478	552	640	718	800	886	935	1018	1168	1328	1435	1647	1738
UP1 M 1330	1330	131	161	250	396	517	597	692	777	865	958	1011	1101	1263	1436	1551	1781	1880

Saft is committed to the highest standards of environmental stewardship

Saft is committed to protecting and preserving the environment. We are engaged in a sustained effort to use resources responsibly and to act in a way that clearly demonstrates our great respect for the planet.

As part of its environmental commitment, Saft gives priority to recycled raw materials over virgin raw materials, reduces its plants'air and water releases year after year, minimizes water usage, reduces fossil energy consumption and associated CO_2 emissions, and ensures that its customers have recycling solutions for their spent batteries.

Regarding industrial batteries, Saft has set up a network of Bring Back Points (BBPs) which receive end-of-life nickel-based batteries from end users free of charge. These batteries are then shipped by these BBPs to our recycling facility in Sweden or to fully permitted recycling companies, in compliance with the laws governing trans-boundary waste shipments.

The recycling efficiency of these recyclers exceeds 75% of the nickel-based battery weight (a level which exceeds the mandated recycling efficiency of 65% applicable to lead-acid batteries), and recycled materials are reused as secondary raw material for industry.

This network of Bring Back Points comprises over 30 entities and provides services in all of our major markets in Europe, North America, Asia and Africa. The list of BBPs and their contact details are available on the Saft website.

Saft
Industrial Standby Division
26 quai Charles Pasqua
92300 Levallois-Perret – France
Tel.: +33 1 58 63 16 00
Fax: +33 1 58 63 16 18 / +33 1 58 63 16 19
www.saftbatteries.com

Document N° 21818-2-0818
Edition: August 2018

Data in this document is subject to change without notice and becomes contractual only after written confirmation.
Photo credits: Saft, Fotolia
Cap Interactif agency - 863
Printed on PEFC paper
© Saft – Société par Actions Simplifiée au capital de 31 944 000 €
RCS Nanterre 383 703 877

A12B *52 Series*

Battery Charger / Power Supply "Constavolt"

The Industry's Most Reliable
Filtered Battery Charger / Power Supply

Made in U.S.A

46LE

Unit Shown: A12B with 52 Data Logging Package

The La Marche model A12B Series Filtered Battery Chargers / Power Supplies are engineered for the demanding requirements of Switchgear applications, Process Controls and Communications. The magnetic amplifier circuitry is designed to carry continous and intermittent loads up to the maximum rated output.

Its robust design, unmatched reliability and many customizable features have made this workhorse the standard charger in the industry.

This series of A12B charger assists with NERC PRC-005-6 as it is equipped with Data Logging capability. The charger maintains a record of all the parameters in the DC system. The Data log file is in an Excel format and is easily accessible through a saved monitored micro SD card.

Standard Features

- Magnetic Amplifier Technology
- 2 Line LCD Display
- Discrete Alarm LEDs and Form-C Contacts
- Advanced Data Logging (Event/Time Based)
- Field Upgradable Firmware Capability
- Downloadable Configurations and Settings Files
- Float/Equalize Modes
- Field Assignable Alarm Relay Contacts
- Multi-Mode Equalize Timer
- AC Input and DC Output Breaker Protection
- AC/DC Surge Suppression (MOV)
- Automatic AC Voltage Compensation
- ± 0.5% DC Voltage Regulation
- Adjustable Current Limit Protection (50% to 120%)
- Output Filtering in Compliance with NEMA PE5 (Battery Eliminator) and IEEE P2405 (Level 2)
- NEMA Type 1 Enclosure / IP20
- UL 1012 & C-UL Listed (UL 1481 listing available with 46 series)
- 5-Year Full Warranty
  10-Year Magnetics Warranty

Specifications subject to change without notice

La Marche Mfg. (A U.S. Company)
106 Bradrock Drive, Des Plaines, IL 60018
Tel: 847.299.1188 Fax: 847.299.3061
sales@lamarchemfg.com
www.lamarchemfg.com

P25-DSA12B-2
ECN 23132
03/22

Specifications

ELECTRICAL	**Available AC Input Voltage Ratings**	Single Phase: 60Hz: 120, 208, 220, 240, 480 or 600 50Hz: 220/240, 380 or 415 Three Phase: 60Hz: 208, 240, 480 or 600 50Hz: 220/240, 380 or 415
	AC Input Voltage Range	+10% to -12% from nominal
	AC Input Frequency Range	±5%
	Available DC Output Ratings	DC Amps: 10 to 400 amperes DC Volts: 12, 24, 48, 130VDC (Others available such as 32, 36 & 260VDC)
	DC Output Range(Min.)	Lead Acid: Float (V/Cell) 2.12 - 2.35; Equalize(V/Cell) 2.2 - 2.45 Ni-Cad: Float (V/Cell) 1.35 - 1.45; Equalize(V/Cell) 1.5 - 1.6
	Output Filtering (with or without a battery)	30mV RMS for 12, 24, 48Vdc models and 130Vdc single phase models 100mV RMS for 130Vdc three phase models
	DC Voltage Regulation	±0.5%
	Power Protection	AC Breaker, DC Breaker and Current Limit Protection
MECHANICAL	**Dimensions**	Varies by size. Refer to the available models chart
	Mounting	Varies by Enclosure size
	Finish	Pretreated with a seven stage iron phosphate wash, sealer and deionized rinse. Then coated with an environmentally safe and durable ANSI 61 gray Polyester TGIC Minite powder finish.
	Audible Noise	Less than 65dBA at any point 5 feet from any vertical surface of the unit
	MTBF	Exceeds 250,000 Hours
MONITORING	**Display**	2 Line LCD Display
	Data Logging	Events and Time Based (*.CSV File on micro SD Card)
	LED's	·Float ·Equalize ·LV/End of Discharge ·HV/HV Shutdown ·AC ON ·AC FAIL ·Low DC Current ·Overload/Current Limit ·Summary ·Charger Fail ·Positive Ground ·Negative Ground
	Alarm Contacts ((2) Form-C Dry Contacts) (Field Assignable / Default Listed)	·Summary ·AC Power Failure ·High DCV ·High DCV Shutdown ·Low DCV ·Low DC Current ·Positive Ground ·Negative Ground
	Optional Communications	DNP 3.0, MODBUS, MODBUS RTU, SNMP and IEC 61850
ENVIRON-MENTAL	**Operating Temperature**	0° to 50°C (32° to 122°F)
	Storage Temperature	-40° to 85°C (-40° to 185°F)
	Relative Humidity	0% to 95% (non-condensing)
STANDARDS AND COMPLIANCE	**Industrial Battery Chargers**	NEMA PE5 and IEEE P2405
	UL Battery Charger	UL Std. No. 1012 File E 319318, Guide BBML
	C-UL Battery Charger	CAN/CSA Std. C22.2 No. 107-2
	UL Fire Alarm System Power Supply	UL Std. No. 1481 (Available with 46 series only. Must Specify Accessory Code 09A Available on 240V or less.)

Notes: All models where appropriate will carry the U.L. and C-U.L. Battery Charger listing. When U.L. Fire Alarm System Power Supply Listings are required, you must specify this requirement at the time of order. Consult our factory if U.L. approvals are required. Not all models can be U.L. approved. Accessories, type of charger and rating will determine U.L. approval.

Optional Accessories

ALARM & CONTROL

050/ 06D	Ground Detection Switch 3-position with DC Voltmeter indication (130VDC models utilizes two switches)
10G	Forced Load Sharing (with same model number only)
103	Remote Sensing
20Q	Equalize Fan Control Relay

METERING & PROTECTION

01M	DC Breaker two Pole High Interrupting - 22KAIC (up to 250VDC)
01C	AC Breaker two Pole High Interrupting - 65/35/18KAIC (240/480/600VAC)
01D	AC Breaker two Pole High Interrupting - 100/65/25KAIC (240/480/600VAC)
01F	AC Breaker three Pole High Interrupting - 65/35/18 KAIC (240/480/600VAC)
01G	AC Breaker three Pole High Interrupting - 100/65/25KAIC (240/480/600VAC)
06G	Zero Center Ammeter w/Battery & Load Terminals (under 250A units)
19V	Digital AC Voltage & Current metering (1%)
102	DC Blocking Diode
11L	Lightning Arrestor
434	Reverse polarity Protection
03T	Low Voltage Battery Disconnect
03S	Low Voltage Load Disconnect
068	Audible Alarm w/ Silence Switch

COMMUNICATION PROTOCOLS

21J	IEC 61850 (Ethernet)
21P	DNP 3.0 Communications (RS232/RS485/Ethernet)
21Q	MODBUS Communications (RS232/RS485/Ethernet)
21S	MODBUS RTU Serial Data Port (RS232/RS485)
21X	SNMP V3/Web Browser (Ethernet)

MISCELLANEOUS

092	Tropicalization (magnetics only) Single Phase
093	Tropicalization (magnetics only) Three Phase
10B	USCG (U.S. Coast Guard) Accessories
10L	Battery & Load Terminals (under 250A units)
11F	30mV Filtering for 130V 3-phase units
38G	ABS (American Bureau of Shipping) Modifications
38J	ABS (38G) & USGC (10B) Single Phase
38K	ABS (38G) & USGC (10B) Three Phase
11V	Temperature Compensation (Internal Probe)
11W	External Temperature Probe 24 ft
38D	Copper Ground Bus Bar
095	Heat Shrinkable Wire Markers with Point to Point Wiring Diagram
09W	Heat Shrinkable Wire Markers with Electrical Schematic
09L	Physical Parts Location Drawing
097	SIS Wire (#16 AWG and larger) Markers
080	Drip Shield
---	Floor Stand (must order separately)
---	Special NEMA (3R, 4, 4X and 12) and IP Rated Enclosures

Available Packages

	SINGLE PHASE	THREE PHASE
PACKAGE #1 STANDARD	52E Digital Monitoring with Data Logging 016 AC Breaker Two Pole 017 DC Breaker Two Pole	52E Digital Monitoring with Data Logging 01B AC Breaker Three Pole 017 DC Breaker Two Pole
PACKAGE #2	52E Digital Monitoring with Data Logging 016 AC Breaker Two Pole 017 DC Breaker Two Pole 10G Forced Load Sharing 102 DC Blocking Diode	52E Digital Monitoring with Data Logging 01B AC Breaker Three Pole 017 DC Breaker Two Pole 10G Forced Load Sharing 102 DC Blocking Diode
PACKAGE #3	52E Digital Monitoring with Data Logging 016 AC Breaker Two Pole 017 DC Breaker Two Pole 21P* DNP 3.0 Communications 21Q* MODBUS Communications 21J* IEC 61850 Ethernet Communications	52E Digital Monitoring with Data Logging 01B AC Breaker Three Pole 017 DC Breaker Two Pole 21P* DNP 3.0 Communications 21Q* MODBUS Communications 21J* IEC 61850 Ethernet Communications

*Pick only one communication option: 21P or 21Q or 21J.

User Interface

- ✓ Voltage
- ✓ Current
- ✓ Active Alarms
- ✓ Last 10 Data Log Events
- ✓ Equalize Cycle Status
- ✓ Real - Time Clock
- ✓ Equalize Cycle Settings
- ✓ Alarms Thresholds and Delays
- ✓ Data Logging Settings
- ✓ Communications Settings
- ✓ Password Protected Menu
- ✓ Firmware Field Upgrade
- ✓ LEDs Test

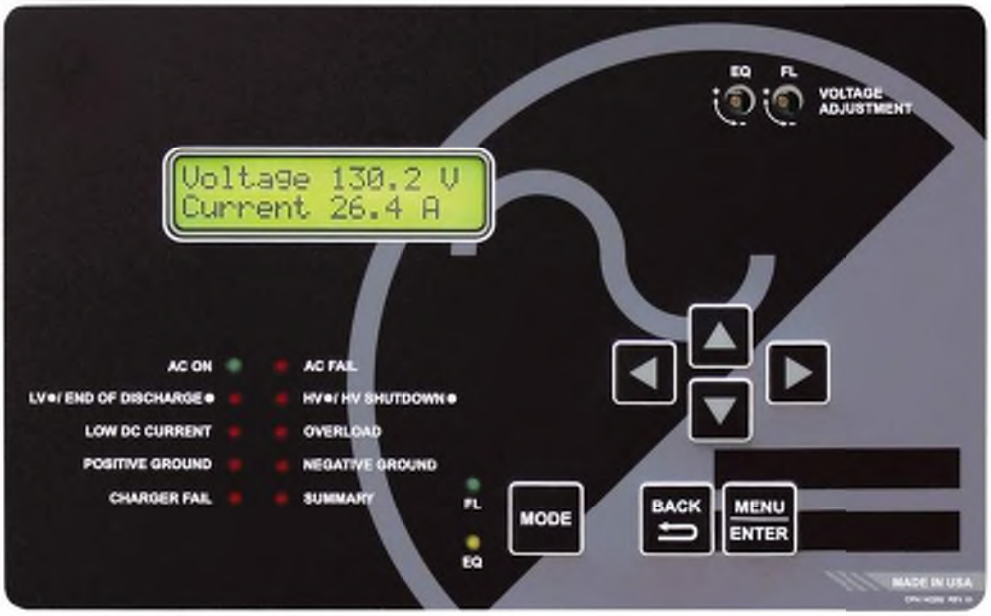

Advanced Data Logging

A12B 52-Series is equipped with a time & event based data-log with a battery backup for real-time-clock stamp, written to a removable micro-SD card. This allows trending the health of your DC system, and provides knowledge of the history leading up to the event.

	A	B	C	D	E	F	G	H
2	Created on 04/17/2019 at 02:35:19							
3	Charger Serial Number 123456-01							
4	Firmware P525DS0001 052620							
5	**Date**	**Time**	**DCV (V)**	**DCA (A)**	**BATTERY (V)**	**PROBE #1 (C)**	**PROBE #2 (C)**	**Event**
6	4/17/2019	2:35:19	131.2	23.5	131.1	27.3	----------	Reset to Defaults
7	4/17/2019	2:36:29	125.6	23.5	125.5	27.3	----------	198 #1 Board OK
8	4/17/2019	2:36:29	125.6	23.5	125.5	27.3	----------	Low Voltage Alarm OK
9	4/17/2019	2:36:29	125.6	23.5	125.5	27.3	----------	End of Discharge Alarm OK
10	4/17/2019	2:36:30	136.2	0	136.1	27.3	----------	High Voltage Alarm FAIL
11	4/17/2019	2:36:30	0	0	0	27.3	----------	Charger Failure Alarm OK

Please consult factory for other available cell ranges if desired range not shown.

Must specify only one battery type and number of cells from range shown above.

	Model Number	DC Amps	DC (1) Fuse Size (Amps)	AC Input Phase	AC Input Current Draw @ 100% Load (Amps) (2)									Std.(4) Case Size	Shipping Weight (Approximate)	
					60Hz Units						50Hz Units					
					A 120	D 208	L 220	B 240	C 480	ZD 600	B 240 / L 220	G 380	J 415		lbs	kgs
12 volt systems (6L, 9 or 10NC)	A12B-10-12V	10	20	1	2.5	1.4	1.4	1.3	---	---	1.3 / 1.4	---	---	3	90	41
	A12B-15-12V	15	25	1	3.8	2.2	2.1	1.9	---	---	1.9 / 2.1	---	---	3	90	41
	A12B-20-12V	20	30	1	5	2.9	2.7	2.5	---	---	2.5 / 2.7	---	---	3	95	44
	A12B-30-12V	30	40	1	7.5	4.3	4.1	3.8	1.9*	1.6*	3.8 / 4.1	2.4*	2.2*	3	105	48
	A12B-40-12V	40	60	1	10	5.8	5.5	5	2.5*	2.1*	5 / 5.5	3.2*	2.9*	6	155	71
	A12B-50-12V	50	80	1	13	7.2	6.8	6.3	3.1*	2.6*	6.3 / 6.8	4.0*	3.6*	6	170	78
	A12B-60-12V	60	80	1	15	8.7	8.2	7.5	3.8*	3.1*	7.5 / 8.2	4.7*	4.3*	6	180	82
	A12B-75-12V	75	100	1	19	11	11	9.4	4.7*	3.9*	9.4 / 11	5.9*	5.4*	6	225	103
	A12B-100-12V	100	150	1	25	14	14	13	6.3*	5.2*	13 / 14	7.9	7.2	8A	315	143
		100	150	3	---	7.5	7.1	6.5	3.3*	2.7*	6.5 / 7.1	4.1*	3.8*	8A	325	148
	A12B-200-12V	200	250	3	---	15	14.2	13	6.6	5.4*	13 / 14.2	8.2	7.6	72	500	227
24 volt systems (12L, 18, 19 or 20NC)	A12B-10-24V	10	20	1	5	2.9	2.7	2.5	---	---	2.5 / 2.7	---	----	3	95	44
	A12B-15-24V	15	25	1	7.5	4.3	4.1	3.8	1.9*	1.6*	3.8 / 4.1	2.4*	2.2*	3	100	46
	A12B-20-24V	20	30	1	10	5.8	5.5	5	2.5*	2.1*	5 / 5.1	3.2*	2.9*	3	120	55
	A12B-25-24V	25	35	1	13	7.2	6.8	6.3	3.1*	2.6*	6.3 / 6.8	4.0*	3.6*	3	135	62
	A12B-30-24V	30	40	1	15	8.7	8.2	7.5	3.8*	3.1*	7.5 / 8.2	4.7*	4.3*	3	145	66
	A12B-35-24V	35	50	1	18	11	9.6	8.8	4.4*	3.7*	8.8 / 9.6	5.5*	5.1*	6	190	87
	A12B-40-24V	40	60	1	21	12	11	10	5*	3.2*	10 / 11	6.3*	5.8*	6	205	93
	A12B-50-24V	50	80	1	26	15	14	13	6.3*	5.2*	13 / 14	7.9	7.2	6	240	109
	A12B-60-24V	60	80	1	31	18	17	15	7.5	6.3*	15 / 17	9.5	8.7	6	265	121
	A12B-75-24V	75	100	1	38	22	21	19	9.4	7.8	19 / 21	12	11	72	400	182
	A12B-100-24V	100	150	1	51	29	28	26	13	11	26 / 28	16	15	72	450	205
		100	150	3	---	15	14.2	13	6.6	5.4*	13 / 14.2	8.2	7.6	72	500	227
	A12B-125-24V	125	200	3	---	19	18	17	8.1	6.8*	17 / 18	11	9.4	72	525	239
	A12B-150-24V	150	200	3	---	23	22	20	9.8	8.2	20 / 22	13	12	72	630	286
	A12B-200-24V	200	250	3	---	30	29	26	13	11	26 / 29	17	16	27	825	375
	A12B-250-24V	250	300	3	---	38	36	33	17	14	33 / 36	21	19	27	880	400
	A12B-300-24V	300	400	3	---	46	43	40	20	17	40 / 43	25	23	27	940	427
	A12B-400-24V	400	600	3	---	61	57	53	26	22	53 / 57	33	31	47	1350	613
48 volt systems (24L, 36, 37 or 38NC)	A12B-10-48V	10	20	1	10	5.8	5.5	5	2.5*	2.1*	5 / 5.5	3.2*	2.9*	3	140	64
	A12B-15-48V	15	25	1	15	8.7	8.2	7.5	3.8*	3.1*	7.5 / 8.2	4.7*	4.3*	3	180	82
	A12B-20-48V	20	30	1	21	12	11	10	5*	4.2*	10 / 11	6.3*	5.8*	6	205	93
	A12B-25-48V	25	35	1	26	15	14	13	6.3*	5.2*	13 / 14	7.9	7.2	6	240	109
	A12B-30-48V	30	40	1	31	18	17	15	7.5	6.3*	15 / 17	9.5	8.7	6	265	121
	A12B-40-48V	40	60	1	41	24	22	21	10	8.4	21 / 22	13	12	6	275	125
	A12B-50-48V	50	80	1	51	29	28	26	13	11	26 / 28	16	15	8A	355	161
	A12B-60-48V	60	80	3	---	18	17	16	7.8	6.5*	16 / 17	9.9	9	8A	400	182
	A12B-75-48V	75	100	3	---	23	22	20	9.8	8.2	20 / 22	13	12	72	525	239
	A12B-100-48V	100	150	3	---	30	29	26	13	11	26 / 29	17	16	72	625	284
	A12B-125-48V	125	200	3	---	38	36	33	17	14	33 / 36	21	19	72	700	318
	A12B-150-48V	150	200	3	---	46	43	40	20	17	40 / 43	25	23	27	850	386
	A12B-175-48V	175	250	3	---	53	50	46	23	19	46 / 50	29	27	27	1000	454
	A12B-200-48V	200	250	3	---	61	57	53	26	22	53 / 57	33	31	27	1150	522
	A12B-250-48V	250	300	3	---	76	71	66	33	28	66 / 71	42	38	47	1400	635
	A12B-300-48V	300	400	3	---	91	86	79	40	33	79 / 86	50	46	47	1700	772
	A12B-400-48V	400	600	3	---	*121*	*114*	105	53	44	105 / 114	66	61	47	1800	817
130 volt systems (54 through 60L, 92 through 97NC)	A12B-10-130V	10	20	1	26	15	14	13	6.3*	5.2*	13 / 14	7.9	7.2	6	225	103
	A12B-15-130V	15	25	1	38	22	21	19	9.4	7.8	19 / 21	12	11	6	250	114
	A12B-20-130V	20	30	1	51	29	28	26	13	11	26 / 28	16	15	6	270	123
		20	30	3	---	15	14	13	6.5	10	13 / 14	8.2	7.5	8A	360	164
	A12B-25-130V	25	35	1	*63*	37	35	32	16	14	32 / 35	20	19	8A	355	161
		25	35	3	---	19	18	16	8.1	13	16 / 18	10	9.4	8A	390	177
	A12B-30-130V	30	40	1	*75*	44	41	38	19	16	38 / 41	24	22	8A	390	177
		30	40	3	---	23	21	20	9.8	16	20 / 21	12	11	8A	430	196
	A12B-35-130V	35	50	1	*88*	51	48	44	22	19	44 / 48	28	26	72	505	230
		35	50	3	---	27	25	23	12	9.5	23 / 25	15	14	72	580	264
	A12B-40-130V	40	60	1	*101*	58	55	51	26	21	51 / 55	32	29	72	550	250
		40	60	3	---	30	29	26	13	11	26 / 29	17	16	72	625	284
	A12B-50-130V	50	80	3	---	38	36	33	17	14	33 / 36	21	19	72	645	293
	A12B-60-130V	60	80	3	---	46	43	40	20	17	40 / 43	25	23	27	865	393
	A12B-75-130V	75	100	3	---	57	54	49	25	21	49 / 54	31	29	27	930	422
	A12B-100-130V	100	150	3	---	76	71	66	33	28	66 / 71	42	38	27	1040	472
	A12B-125-130V	125	200	3	---	94	89	82	41	34	82 / 89	52	48	47	1500	681
	A12B-150-130V	150	200	3	---	*113*	*107*	*98*	49	41	*98* / 107	62	57	47	1800	817
	A12B-175-130V	175	250	3	---	*132*	*125*	*114*	57	48	*114* / 125	72	66	47	1950	885
	A12B-200-130V	200	250	3	---	*151*	*142*	*131*	66	55	*131* / 142	83	76	47	2100	953
	A12B-250-130V (5)	250	300	3	---	*188*	*178*	*163*	82	68	*163* / 178	103	95	47	2300	1044
	A12B-300-130V (3)(5)	300	400	3	---	*226*	*214*	*196*	98	82	*196* / 214	124	113	47B	2400	1089
	A12B-400-130V (3)(5)	400	600	3	---	*301*	*285*	*261*	131	109	*261* / 285	165	151	57	2550	1157

(1) Optional DC Breaker when ordered in lieu of standard fuse(s) may slightly differ in ratings. AC Draws shown with asterisk* when equipped with AC Breaker, a series fuse is included.

(2) AC Current Draws based @ 100% load and standard battery cells of 6L (12V), 12L (24V), 24L (48V) and 60L (130V). Maximum Current Draw is 120% of ratings shown. AC Current draws shown in Italics have high current draws for their specific input voltages - verification of input power requirement should be done prior to ordering.

(3) Denotes units not U.L Listed

(4) Case sizes shown are for standard 60 Hz units and may differ depending on optional accessories and/or 50Hz input. Please consult factory when dimensions are critical.

(5) Denotes units not UL 1481 Listed.

Case Specifications

Case No.	Overall Dimensions						Cable Entry (when facing unit)		
	Width		Depth		Height				
	in	mm	in	mm	in	mm	AC Input	DC Output	Mounting
3	15.375	391	11.000	279	23.750	603	Right	Left	Wall/Floor
6	25.580	650	13.935	354	28.000	711	Right/Top Bottom	Left/Top Bottom	Wall/Floor
7	14.250	362	10.625	270	19.875	505	Right	Left	Wall/Floor
8A	27.200	691	15.250	387	32.500	826	Right/Top Bottom/Side	Left/Top Bottom/Side	Floor
27	27.312	694	25.875	657	56.125	1426	Top	Top	Floor
47	38.000	965	39.375	1000	70.000	1778	Top/Bottom	Top/Bottom	Floor
47B	38.000	965	46.750	1188	71.125	1807	Top/Bottom	Top/Bottom	Floor
57	60.000	1524	36.000	914	80.000	2032	Bottom	Bottom	Floor
72	27.000	686	23.500	597	44.500	1130	Right/Bottom	Bottom	Floor

Notes: Case sizes may differ depending on optional accessories and / or 50Hz input. Please consult factory when dimensions are critical. Dimensions shown above are overall footprint. Detailed dimensions drawings are available for mounting purposes.

Model Number Nomenclature

A12B - 15 - 130V - ( ) ( ) 1 - ( ) - ( )

- Model Number
- DC Amps
- DC Volts
- Special Frequency When Required *
- AC Voltage(s) Codes
- AC Phase Code
- Battery Cell Type
- Factory Assigned Accessory Code

AC Phase Codes
1 - Single Phase
3 - Three Phase

AC Voltage Codes

60Hz	50Hz
A - 120	BL - 240/220
D - 208	G - 380
L - 220	J - 415
B - 240	
C - 480	
ZD - 600	

Special Frequency Code
5 = 50Hz
* 60Hz standard unless special code is entered

Battery Cell Type
L = Lead Acid
LR = VRLA
N = Nickel Cadmium

Ordering Information

When ordering, please specify:

- La Marche Model Number A12B
- Input Voltage, Frequency, Phase
- Number and Type of Battery Cells
- Amp Hour Capacity of Battery
- Intermittent DC Loads and Duration
- Continous DC Load
- Allowable Recharge Time from Full Discharge (where applicable)
- Package Number or for Custom Order Optional Accessories
- Verify AC Input Current Draw

Article No.: EQ1USSS002009001 Rack Type: EQ-1US-SS__2-00900-1 Battery: 20 x UP1 M 125

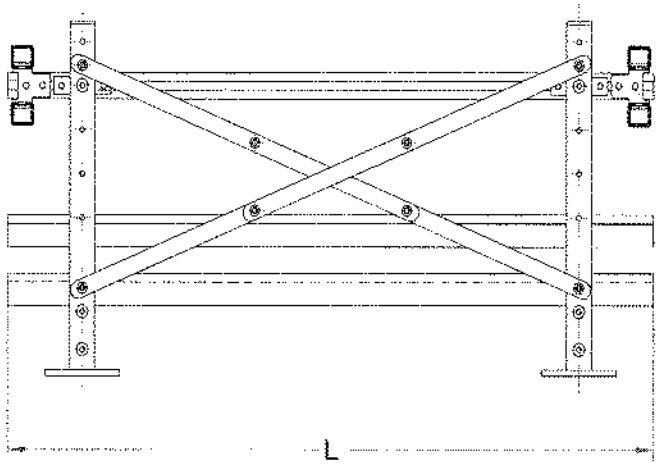

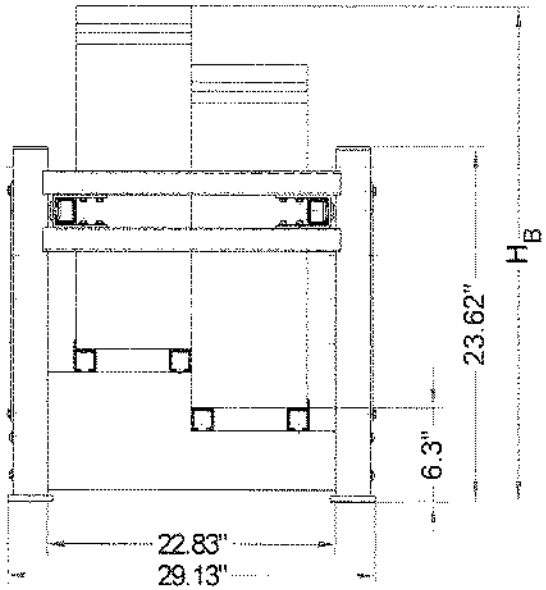

Length: L = 35.43 inch

Height incl. Battery: HB = 26.81 inch

Panel Mount Signaling Alarms

Bulletin 855P — Panel Mount Signaling Alarms

Build a Catalog Number

- Mounts in standard 22.5 mm hole
- Watertight panel alarms in three different sizes
- Sound output 72…105 dB @ 1 meter
- UL Type 4/4X/13, IP65
- Combination sounder and LED products
- Panel mount strobe or LED indicator products
- Plug-in terminal blocks, IP2X finger-safe rated
- Single-circuit functions include:
  - Sounder with selectable continuous or pulsing tone (also wobble on 65 mm)
  - Combined sounder with LED beacon
  - Xenon flashing strobe
  - LED beacon, selectable steady, or flashing
- Dual-circuit functions include:
  - Two-color LED beacon half-lens illumination
  - Two-color LED beacon full-lens illumination
  - Combined sounder with LED beacon

Standards Compliance

EN/IEC 60947-1
EN/IEC 60947-5-1
UL 508
CSA C22.2 No. 14

Certifications

cULus Listed (File No. E14840, Guides NKCR, NKCR7)
CE Marked

Panel Sounder and Single/Dual Circuit Panel Sounder with LED

Technical						
Housing:	Base Material	Polycarbonate, black				
	Lens	Polycarbonate, red, amber, yellow, green, blue, and clear				
Protection class		UL Type 4/4X/13, IP65				
Terminals		Plug-in terminal block, up to 2.5 mm2 (14 AWG), IP2X				
Operation temperature range		-25...+60 °C (-13...+140 °F)				
Storage temperature range		-25...+85 °C (-13...+185 °F)				
Mounting		Central mounting for bore holes 22 mm or 30.5 mm with hole adapter kit (Cat. No. 855P-AHA1)				
Mounting nut torque		1.7 N•m (15 lb•in)				
Electrical						
		Sounder			**Sounder with Warning Light**	
		65 mm	**45 mm**	**30 mm**	**65 mm**	**45 mm**
Supply voltage range	12V AC/DC - 50/60 Hz	—	—	—	+/-10%	+/-10%
	24V AC/DC - 50/60 Hz	—	—	—	+/-10%	+/-10%
	12...24V AC/DC - 50/60 Hz	8...26V AC/DC	8...26V AC/DC	10...26V AC/DC	—	—
	120V AC - 50/60 Hz	50...140V AC	50...140V AC	80...140V AC	+/-10%	+/-10%
	230/240V AC - 50/60 Hz	150...260V AC	150...260V AC	180...260V AC	+/-10%	+/-10%
Nominal current — single circuit (dual circuit)	12V AC/DC - 50/60 Hz	—	—	—	50 mA (62 mA)	35 mA (48 mA)
	24V AC/DC - 50/60 Hz	57 mA	20 mA	20 mA	73 mA (95 mA)	58 mA (73 mA)
	120V AC - 50/60 Hz	40 mA	40 mA	20 mA	60 mA (52 mA)	40 mA (51 mA)
	230/240V AC - 50/60 Hz	42 mA	42 mA	20 mA	63 mA (52 mA)	42 mA (51 mA)
Turn-on leakage current		≥3 mA	≥3 mA	≥3 mA	≥3 mA	≥3 mA
Maximum sound level (average)		105 dBA @ 1 m	100 dBA @ 1 m	SE: 72 dBA @ 1 m SH: 80 dBA @ 1 m	103 dBA @ 1 m	98 dBA @ 1 m
Minimum sound level		<85 dB	<85 dB	—	<85 dB	<85 dB
Sound level adjustment		Stepless	Stepless	—	Stepless	Stepless
Sound main frequency		3300 Hz	3300 Hz	3500 Hz	3300 Hz	3300 Hz
Sound types	Continuous	Yes	Yes	Yes	Yes	Yes
	Pulsing*	Yes	Yes	Yes	Yes	Yes
	Alternating frequency*	Yes	No	No	Yes	No
Sound selection		Externally by terminal connection				
Weight		65 g	35 g	25 g	85 g	55 g

* Single Circuit only.

Panel Strobe and Single/Two Color LED Lights

Technical							
Housing:	Base Material	Polycarbonate, black					
	Lens	Polycarbonate, red, amber, yellow, green, blue, and clear					
Protection class		UL Type 4/4X/13, IP2X, IP65					
Terminals		Plug-in terminal block, up to 2.5 mm2 (14 AWG), IP2X finger-safe					
Operation temperature range		-25...+60 °C (-13...+140 °F)					
Storage temperature range		-25...+85 °C (-13...+185 °F)					
Mounting		Central mounting for bore holes 22 mm or 30.5 mm with hole adapter kit (Cat. No. 855P-AHA1)					
Mounting nut torque		1.7 N•m (15 ib•in)					
Electrical							
		LED Beacon — Steady/Flashing			**Strobe Light**		
		65 mm	**45 mm**	**30 mm**	**65 mm**	**45 mm**	**30 mm**
Supply voltage range	12V AC/DC - 50/60 Hz	+/-10%	+/-10%	+/-10%	—	—	+/-10%
	24V AC/DC - 50/60 Hz	+/-10%	+/-10%	+/-10%	—	—	+/-10%
	12...24V AC/DC 50/60 Hz	—	—	—	8...26V AC/DC	8...26V AC/DC	—
	120V AC - 50/60 Hz	+/-10%	+/-10%	+/-10%	+/-10%	+/-10%	+/-10%
	230/240V AC - 50/60 Hz	+/-10%	+/-10%	+/-10%	+/-10%	+/-10%	+/-10%
Nominal current — single color (two color w/ full or half illumination)	12V AC/DC - 50/60 Hz	75 mA	60 mA	30 mA	—	—	15 mA
	24V AC/DC - 50/60 Hz	54 mA (full: 71 mA half: 44 mA)	35 mA (full: 46 mA half: 39 mA)	25 mA (full: 28 mA half: 30 mA)	—	—	10 mA
	12...24V AC/DC 50/60 Hz @ 12V	—	—	—	150 mA	110 mA	—
	12...24V AC/DC 50/60 Hz @ 24V	—	—	—	140 mA	100 mA	—
	120V AC - 50/60 Hz	25 mA (full: 61 mA half: 41 mA)	25 mA (full: 35 mA half: 35 mA)	20 mA	30 mA	20 mA	10 mA
	230/240V AC - 50/60 Hz	25 mA (full: 61 mA half: 41 mA)	25 mA (full: 35 mA half: 34 mA)	20 mA	20 mA	12 mA	10 mA
Turn-on leakage current		≥3 mA	≥3 mA	≥3 mA	≥3 mA	≥3 mA	≥3 mA
Steady/Flashing light		Externally by terminal connection			—	—	—
Flashing frequency		2 Hz	2 Hz	2 Hz	min. 1.4 Hz	min. 1.4 Hz	min. 1.4 Hz
Light source		LED			Xenon tube		LED
Flash energy		—	—	—	1 J	0.5 J	—
Weight		60 g	40 g	40 g	80 g	60 g	40 g

Dimensions in millimeters (inches). Dimensions are not intended to be used for manufacturing purposes.

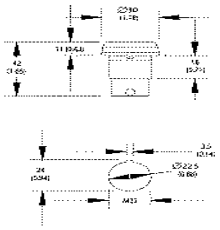

30 mm Sounder⋆

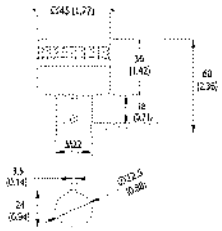

45 mm Sounder‡

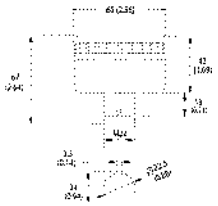

65 mm Sounder‡

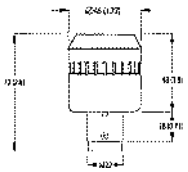

45 mm Combined Sounder with LED Beacon‡

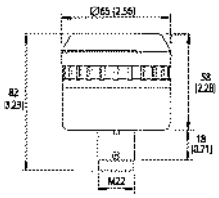

65 mm Combined Sounder with LED Beacon‡

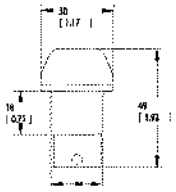

30 mm LED⋆
30 mm Strobe⋆

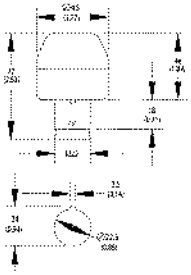

45 mm LED‡
45 mm Strobe‡

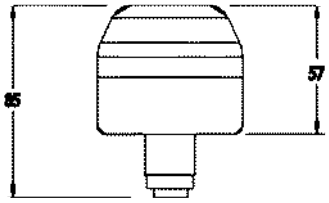

65 mm LED‡
65 mm Strobe‡

⋆ Terminal connector adds 14 mm (0.55 in.) to back of panel depth.
‡ Terminal connector adds 9 mm (0.35 in.) to back of panel depth.

Copyright © 2014 Rockwell Automation, Inc. All Rights Reserved.

BE1-32R, BE1-32O/U DIRECTIONAL POWER RELAY

The BE1-32R Directional Overpower Relay and the BE1-32O/U Directional Over/Underpower Relay are solid-state devices which provide versatility and control in protecting machines against reverse power flow, underpower and overpower conditions.

APPLICATION
Pages 2 - 4

SPECIFICATIONS
Pages 4 - 8

EXTERNAL CONNECTIONS
Pages 9 - 10

ORDERING INFORMATION
Pages 11 - 12

ADVANTAGES

- Measures Real Power - El cos Θ.
- Wide variety of input configurations are available including single-phase and three phase, 3 and 4 wire systems.
- Sensing ranges available from 0.5 to 6000 watts secondary.
- Instantaneous, definite and inverse timing characteristics available.
- Low input sensing and supply burdens.
- Qualified to the requirements of
  IEEE C37.90.1-1989 and IEC 255 for fast transient and surge withstand capability;
  IEC 255-5 for impulse.
- UL recognized under Standard 508, UL File #E97033.
- Gost R certified per the relevant standards of Gosstandart of Russia.
- Five year warranty.

ADDITIONAL INFORMATION

INSTRUCTION MANUAL

Request Publication 9171100990

STANDARDS, DIMENSIONS, AND ACCESSORIES

Request bulletin SDA

Basler Electric
P. O. BOX 269 HIGHLAND, ILLINOIS 62249, U.S.A. PHONE 618-654-2341 FAX 618-654-2351

APPLICATION

PURPOSE

The BE1-32R Directional Overpower Relay and the BE1-32 O/U, Directional Over/Underpower Relays sense real power flow (EI cos Θ). These relays are solid-state devices designed for use in single-phase or three-phase systems to provide equipment protection for overpower and/or underpower or to be used for supervisory control of circuits. Both relay configurations may be used to monitor either forward or reverse power. In the following application examples, single-phase connections are shown for simplicity.

APPLICATION EXAMPLES

The BE1-32 relays (R and O/U) are typically used in applications where excessive power flow in the tripping direction is indicative of undesirable situations. Typical examples are discussed below. Notice: This product is not recommended for power factors below 0.10. Contact Basler Electric for recommended products.

EXAMPLE 1 - ANTI MOTORING

In this example, the power relay is used to protect the prime mover rather than the generator. When an ac generator, operating in parallel with a power system, loses prime mover torque, it remains in synchronism with the system and continues to run as a synchronous motor drawing sufficient power from the system to drive the prime mover. Sustained motoring can cause severe damage to the prime mover. The Directional Power Relay, with its wide sensitivity range, can detect levels of reverse real power flow as low as 0.5 Watts secondary and provide an alarm or trip the unit off line (See Figure 1). In this example, single phase sensing is usually considered sufficient, since motoring is a balanced condition.

EXAMPLE 2 - COGENERATOR CONTROL

Given that a co-generation system has automatic engine controls, auto synchronizer, and automatic kW and kVar controls, the system will virtually operate by itself. The only functions not readily apparent are the start/stop signals to the generators. Two system configurations using a Power Relay may be utilized to generate contact closures for start and/or stop signals.

The first configuration (Figure 2) shows a power relay connected to the utility to sense kW. The pickup point of the relay is set at the maximum desired utility power level. If the power relay contact closes, the generator will be started and automatically paralleled with the utility system. A time delay of 15 seconds or more is generally included in the “start” circuit to ignore transient overload conditions.

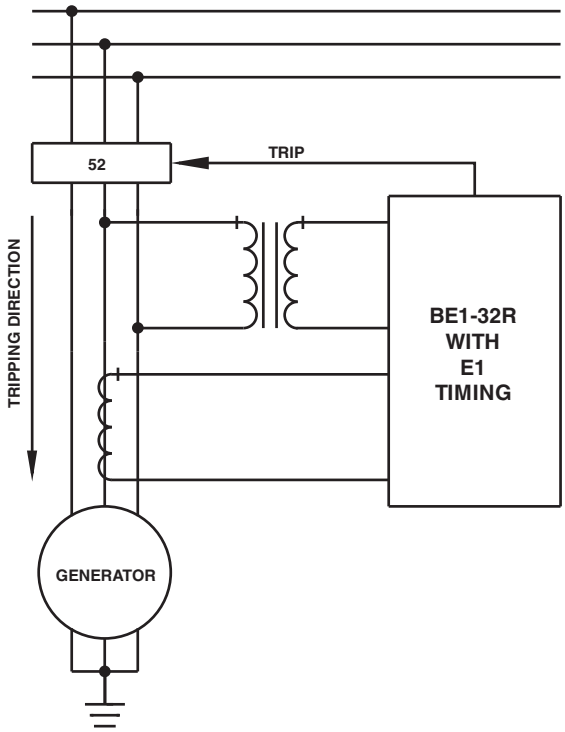

Figure 1 - Power Relay Motoring Protection

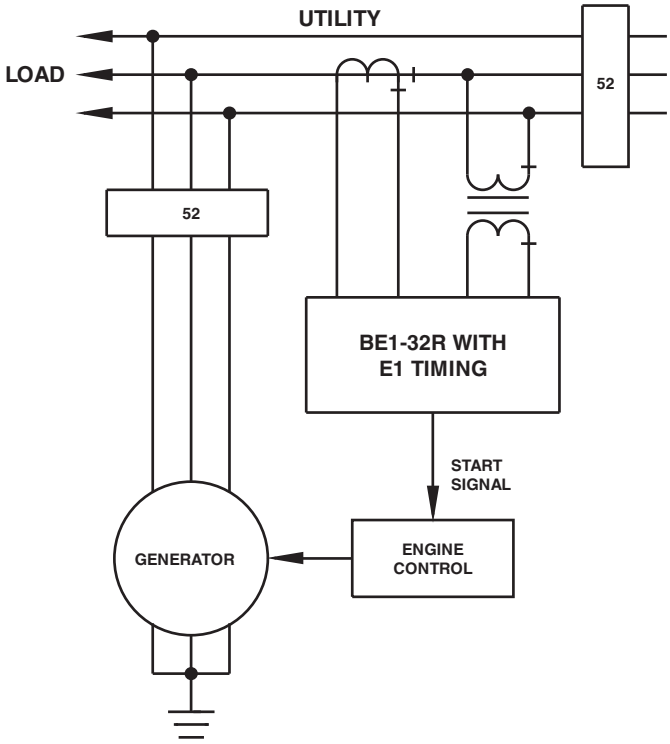

Figure 2 - Power Relay Start Control

APPLICATION, continued

When the generator is paralleled and loaded, the kW signal will decrease by the amount of load the generator accepted. An underpower relay can measure utility power and generate a “stop” signal when utility power decreased below a selected level. A definite time delay will generally be provided for the “stop” signal of one minute or more. The Basler Model BE1-32 O/U Power Relay incorporates both over and under power sensing in one relay, which makes it ideal for this application.

In the second configuration (Figure 3) the “start” signal is generated as in that of Figure 2. The setpoint of the start signal should be above the import power setting. The “stop” signal will require an underpower relay on the generator output. This system is illustrated in Figure 3.

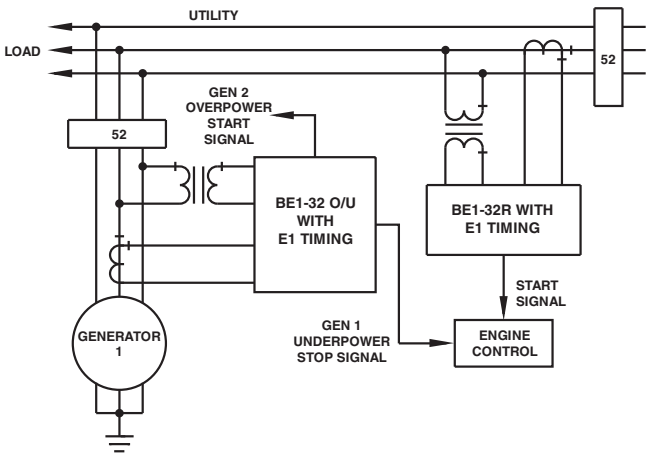

Figure 3 - Power Relay Start/Stop Control

EXAMPLE 3 - GENERATOR OVERLOAD

Refer to Figure 3. Whenever excessive load has been connected to a generating system, the Power Relay will initiate the corrective action by energizing an alarm to alert the station operator or will initiate an automatic sequence to either shed non-critical load or start and parallel an in-house generator to assume the excess load.

EXAMPLE 4 - DISTRIBUTION SYSTEM OVERLOAD

Another typical use, addressing excessive load, concerns distribution protection, see Figure 4. A high-voltage bus supplies two transformers. T1 and T2 together can supply all connected load. However, neither T1 or T2 is capable of supplying the total load. To provide adequate protection for the distribution system, the overpower function is used to sense overload conditions on each transformer and the underpower function is used to sense power flowing through the transformers in an undesired direction.

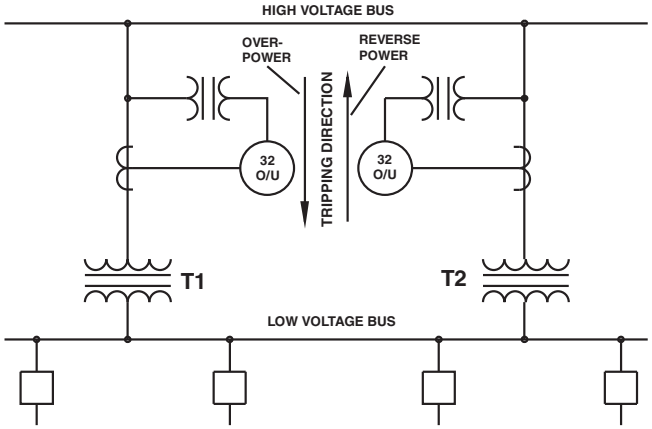

Figure 4 - Distribution Protection

EXAMPLE 5 - REACTIVE POWER (VARs) DETECTION

This example deals with the Directional Power Relay’s ability to measure real or reactive power.

Real power (watts) is supplied to the generator by the prime mover, and reactive power (vars) is supplied to the field by the exciter. When field excitation is significantly reduced and the connected system can provide sufficient reactive power to maintain the generator’s terminal voltage, reactive power will flow into the machine and cause it to operate as an induction generator with essentially the same kW output. This situation causes problems; first, the additional reactive loading of the faulty generator must be redistributed to other synchronous generators on the system. Secondly, a synchronous generator is not designed to function as an induction generator. Excessive heating occurs in the damper (Amortisseur) windings, slot wedges, and in the surface iron of the rotor due to slip frequency current flow which results when a synchronous generator is operated as an induction generator. The Directional Power Relay can be applied to respond to this reactive power flow.

The Basler BE1-32 Directional Power Relay is designed to respond to true power as defined by the equation:

$$P = EI \cos \Theta$$

where: P = real power (watts)
E = effective emf or system voltage
I = effective current
Θ = the phase angle between E and I

APPLICATION, continued

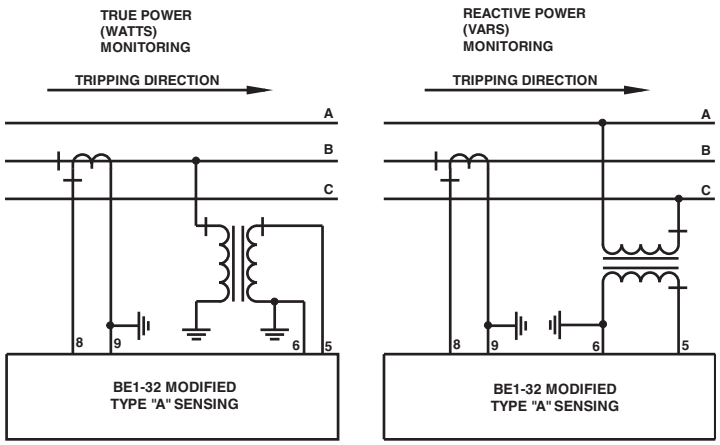

Figure 5 - VARs Measuring

However, reactive power is defined by the equation:

$$Q = EI \sin \Theta$$

Since the sine of Q equals the cosine of (Q - 90°) the relay can be connected to measure only reactive power by adding 90° in the connection of the PTs as shown in Figure 5. The relay is now capable of detecting the inability of the excitation system to supply adequate reactive power.

With the many options and combinations of options available, the Basler Electric Directional Power Relays can be adapted to multitude of systems and situations to provide the utmost in overpower and underpower protection of system equipment.

SPECIFICATIONS

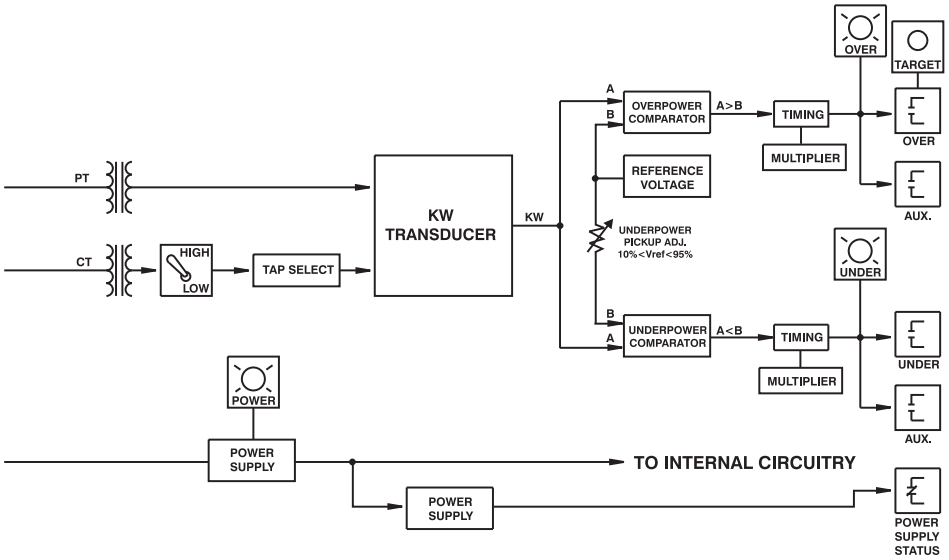

Figure 6 - Functional Block Diagram

FUNCTIONAL DESCRIPTION

The specifications on these pages define the many features and options that can be combined to exactly satisfy a specific application requirement. The block diagram, Figure 6, illustrates how the various standard features, as well as the options, function together.

INPUTS

Current Sensing

System current transformers (CTs) with nominal 5 A secondaries supply the Directional Power Relay's input transformers with one, two or three phase currents. If sensing input range 1, 4 or 7 is selected, the input transformers are capable of 7 A continuous current, 10 A for 1 minute and 140 A for 1 second.

SPECIFICATIONS, continued

If sensing input range 2, 3, 5, 6, 8 or 9 is selected, the input transformers are capable of 10 A continuous current, 15 A for 1 minute and 200 A for 1 second.

Sensing input ranges 1, 4, and 7 have notable burden when the relay is set at maximum sensitivity. Refer to the Current Sensing Burden table in the BE1-32R, BE1-32O/U Instruction Manual, Section 1, Specifications, for the details.

Voltage Sensing
System potential transformers (PTs) with 120 or 240V secondaries supply the Directional Power Relay's input transformers with single or three-phase voltages. The voltage sensing inputs are nominally rated at 100 or 220V (50 Hz) and 120 or 240V (60 Hz) with a maximum burden of 1 VA per input (2 terminals) over the frequency range of 45 to 65 Hz. Maximum continuous voltage is limited to 150% nominal.

SENSING INPUT TYPES
There are 6 sensing input types as defined by the Style Chart (page 12). The Directional Power Relay's input circuitry receives voltage and current signals from system PTs and CTs. The CT signal is adjusted in level by a front panel range switch before it is applied to the kW transducer circuitry. Several input circuit configurations are available, the selection of which is determined by the specific application. The following paragraphs provide a brief description of each input sensing type and their calibration

Type A Sensing: Single-Phase (Figure 7). The type A sensing configuration monitors line-to-neutral voltage and a single phase current of a three-phase, four-wire circuit and calculates the power flowing in the tripping direction. Relays with this sensing type are calibrated in single-phase watts.

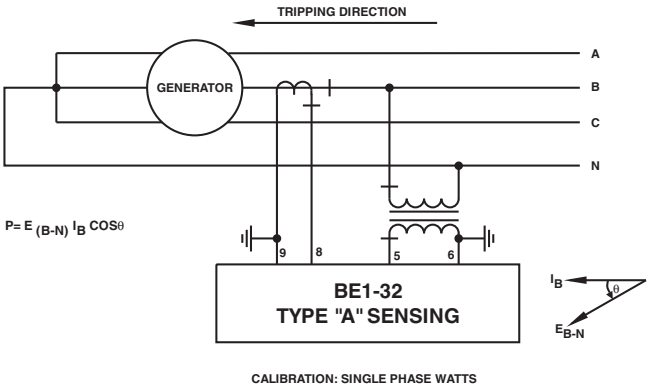

Figure 7 - Single Phase, Type A Sensing

Type B (60 Hz) or Type V (50 Hz) Sensing: Single-Phase (Figure 8) with 30° phase shift. This sensing configuration monitors a line-to-line voltage and a single phase current of a three-phase, three-wire circuit and calculates the power flowing in the tripping direction. Since the input voltage leads the input current by 30° (assuming unity power factor) a 30° lagging phase shift network is designed into the voltage input circuit. Relays with this sensing type are calibrated in single-phase watts. Note: Type B or V configurations are phase rotation sensitive.

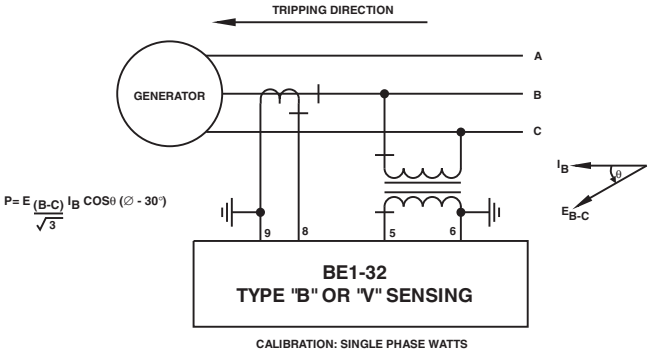

Figure 8 - Single Phase, Type B or V Sensing

Type C Sensing: Three-phase Scott Tee (Figure 9). The type C sensing configuration monitors three line-to-line voltages and a single phase current of a three-phase, three-wire circuit and calculates the power flowing in the tripping direction. The relay measures actual power even if the system voltages are not balanced. Relays with this sensing type are calibrated in three-phase watts.

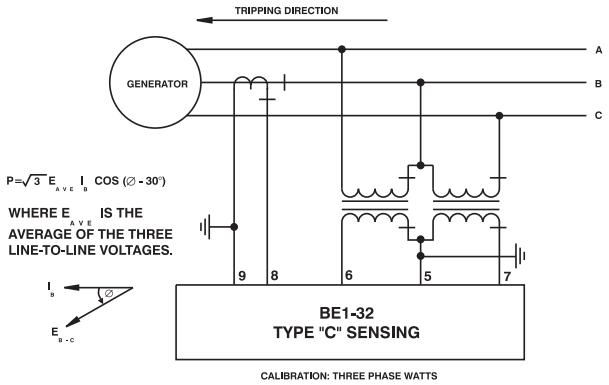

Figure 9 - Three Phase, Type C Sensing

SPECIFICATIONS, continued

Type D Sensing: Three-Phase (Figure 10). The type D sensing configuration monitors three line-to-neutral voltages and three phase currents of a three-phase, four-wire circuit and calculates the power flowing in the tripping direction. Relays with this sensing type are calibrated in three-phase watts.

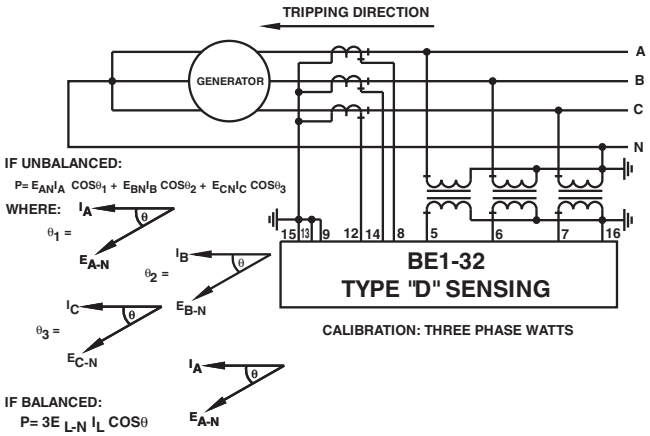

Figure 10 - Three Phase, Type D Sensing

Type E Sensing: Three-Phase (Figure 11). The type E sensing configuration monitors three line-to-line voltages and two of the phase currents of a three-phase, three-wire circuit and calculates the power flowing in the tripping direction. The power equation assumes that conditions are balanced. Relays with this sensing type are calibrated in three-phase watts. Note: Type E configurations are phase rotation sensitive.

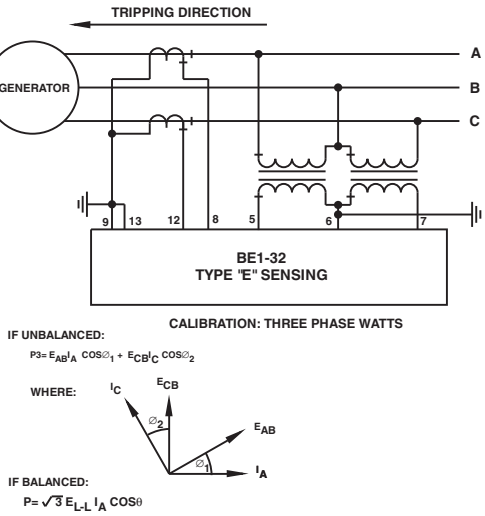

Figure 11 - Three Phase, Type E Sensing

Power Supply

One of four power supply boxes may be selected to provide internal operating power. They are described in Table 1.

Type	Input Voltage		Burden at Nominal
	Nominal	Range	
O (mid range)	48 Vdc	24 to 150 Vdc	3.6 W
P (mid range)	125 Vdc	24 to 150 Vdc	3.7 W
	120 Vac	90 to 132 Vac	17.3 VA
R (low range)	24 Vdc	12 to 32 Vdc*	3.7 W
T (high range)	250 Vdc	68 to 280 Vdc	3.8 W
	230 Vac	90 to 270 Vac	24.6 VA

* The Type R power supply may require 14 Vdc to begin operation. Once operating, the voltage may be reduced to 12 Vdc.

Table 1 - Wide Range Power Supply, Voltage Ranges

POWER RANGE PICKUP

Overpower pickup of the relay is adjustable by means of a front panel 10 position rotary TAP select switch used in conjunction with the front panel HIGH/LOW switch over the defined ranges listed in Table 2. Underpower pickup is continuously adjustable from 10 to 95% of the selected overpower tap. Pickup accuracy is ±2% (or ±0.05 watts one phase; ±0.15 watts 3 phase) of the front panel setting for unity power factor. Pickup accuracy is ±5% of the front panel setting for all other power factors (0.5<pf<1.0). The range of voltage for proper operation is 40 to 150 percent of the nominal value.

When the calculated value for power exceeds the overpower pickup setting or falls below the underpower pickup setting and is in the tripping direction, the appropriate LED is illuminated and timing is initiated. One indicating LED is provided for each measuring function within the relay.

KW TRANSDUCER

The kW Transducer samples the current and voltage of each phase on a continuous basis. The resulting signals representing current and voltage are multiplied and integrated to develop a dc voltage level that is representative of true kW.

COMPARATOR CIRCUITS

The dc output of the kW Transducer is then compared to front panel settings for underpower and/or overpower. When the reference level of the comparator (or comparators if applicable) is crossed, the output of the comparator is used to either energize the appropriate output (if instantaneous timing has been specified) or to initiate the timing circuits (definite, or inverse).

TIMING

Time delay is defined as the elapsed time between the application of the condition to the input terminals of the relay and the transition of the output contacts.

SPECIFICATIONS, continued

Sensing Input Type	Nominal Volts	Range		Switch Positions (in Watts)									
				A	B	C	D	E	F	G	H	J	K
A, B, or V 1∅	120	1	Hi	2.0	4.0	6.0	8.0	10.0	12.0	14.0	16.0	18.0	20.0
			Lo	0.5	1.0	1.5	2.0	2.5	3.0	3.5	4.0	4.5	5.0
		2	Hi	20	40	60	80	100	120	140	160	180	200
			Lo	5	10	15	20	25	30	35	40	45	50
		3	Hi	100	200	300	400	500	600	700	800	900	1000
			Lo	25	50	75	100	125	150	175	200	225	250
C, D, or E 3∅	120	1	Hi	6.0	12.0	18.0	24.0	30.0	36.0	42.0	48.0	54.0	60.0
			Lo	1.5	3.0	4.5	6.0	7.5	9.0	10.5	12.0	13.5	15.0
		2	Hi	60	120	180	240	300	360	420	480	540	600
			Lo	15	30	45	60	75	90	105	120	135	150
		3	Hi	300	600	900	1200	1500	1800	2100	2400	2700	3000
			Lo	75	150	225	300	375	450	525	600	675	750
A, B, or V 1∅	208 or 240	4, 7	Hi	4.0	8.0	12.0	16.0	20.0	24.0	28.0	32.0	36.0	40.0
			Lo	1.0	2.0	3.0	4.0	5.0	6.0	7.0	8.0	9.0	10.0
		5, 8	Hi	40	80	120	160	200	240	280	320	360	400
			Lo	10	20	30	40	50	60	70	80	90	100
		6, 9	Hi	200	400	600	800	1000	1200	1400	1600	1800	2000
			Lo	50	100	150	200	250	300	350	400	450	500
C, D, or E 3∅	208 or 240	4, 7	Hi	12.0	24.0	36.0	48.0	60.0	72.0	84.0	96.0	108.0	120.0
			Lo	3.0	6.0	9.0	12.0	15.0	18.0	21.0	24.0	27.0	30.0
		5, 8	Hi	120	240	360	480	600	720	840	960	1080	1200
			Lo	30	60	90	120	150	180	210	240	270	300
		6, 9	Hi	600	1200	1800	2400	3000	3600	4200	4800	5400	6000
			Lo	150	300	450	600	750	900	1050	1200	1350	1500

Table 2 - Power Range Pickup Settings

Each model, BE1-32R or BE1-32 O/U is capable of instantaneous trip, definite time delay trip, or an inverse time delayed trip as defined and selected by the Style Chart.

Instantaneous response time of the relay is within 80 ms (60 Hz) or 100 ms (50 Hz) for a real power magnitude of 2 times the setting.

The definite time delay is adjustable over the ranges of 0.1 to 9.9 seconds and 01 to 99 seconds. Selection of the ranges is accomplished by a front-panel multiplier switch which selects either 0.1 or 1.0 as a multiplier of the front panel Time Dial thumbwheel switch. (A Time Dial setting of 00 enables instantaneous operation.) Definite timing accuracy is ±5% of the setting or 50 ms, whichever is greater.

Inverse time delayed trip is available for the overpower function only. The inverse time delay curve is adjustable from 01 to 99 by means of a front-panel thumbwheel switch. Incrementing the thumbwheel switch moves the inverse curve along the vertical axis. (See Figure 12 for Inverse Time Characteristics.) A Time Dial setting of 00 enables instantaneous operation. Inverse time is accurate to within ±5% of the published curve or 50 ms, whichever is greater.

POWER SUPPLY STATUS OUTPUT (OPTIONAL)

The power supply status output relay is energized and its NC output contact is opened when power is applied to the relay. Normal internal relay operating voltage maintains the power supply status output relay continuously energized with its output contact open. If the power supply output voltage falls below the requirements of proper operation, the power supply output relay is deenergized, closing the NC output contact.

SPECIFICATIONS, continued

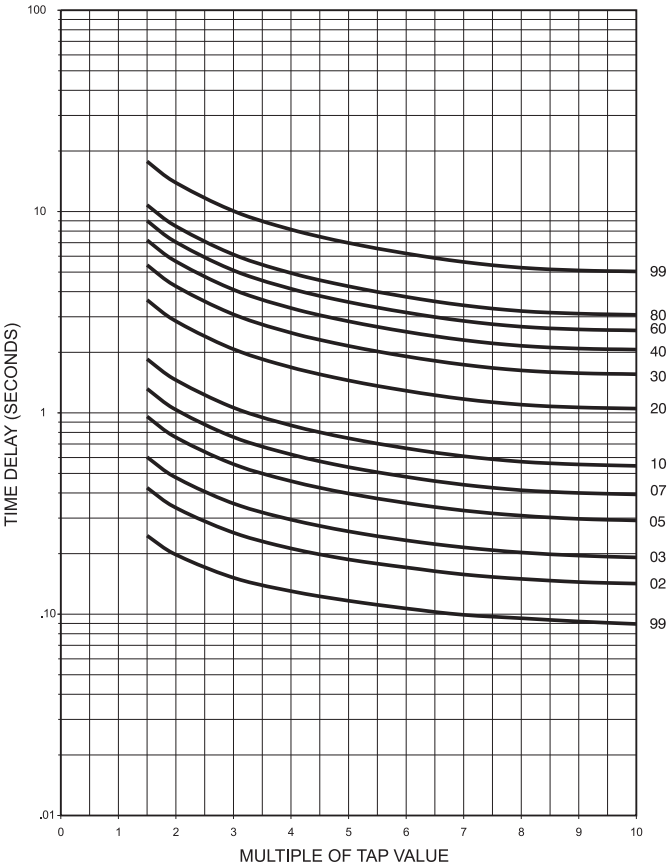

Figure 12 - Overpower Inverse Characteristics

OUTPUTS

Output contacts are rated as follows:

Resistive

120 Vac	Make, break, and carry 7 Aac continuously
250 Vdc	Make and carry 30 Adc for 0.2 s, carry 7 Adc continuously, and break 0.3 Adc
500 Vdc	Make and carry 15 Adc for 0.3 s, carry 7 Adc continuously, and break 0.3 Adc

Inductive

120 Vac, 125 Vdc, 250 Vdc: Break 0.3 A (L/R = 0.04)

TARGETS

Electronically latched target indicators are optionally available to indicate that a trip output has energized. Either internally operated or current operated targets may be specified. Current operated targets require 0.2 A in the output trip circuit to actuate, and trip circuit current must not exceed 30 A for 0.2 seconds, 7 A for 2 minutes, and 3 A continuous. Current operated targets may be selected only when normally open (NO) output contacts have been specified.

PUSH-TO-ENERGIZE-OUTPUT PUSHBUTTONS

Applying a thin non-conducting rod through a hole in the front panel energizes each output relay for testing the external trip circuits.

SURGE WITHSTAND CAPABILITY

Qualified to IEEE C37.90.1-1989 Surge Withstand Capability Test and IEC 255.

FAST TRANSIENT

Qualified to IEEE C37.90.1-1989 Fast Transient Test.

IMPULSE TEST

Qualified to IEC 255-5.

MECHANICAL

Operating Temperature
-40°C(-40°F) to +70°C(+158°F).

Storage Temperature
-65°C(-85°F) to +100°C(+212°F).

Weight
S1 configuration - 13.5 pounds (6.12 kg) max.
M1 configuration - 18.5 pounds (8.39 kg) max.

Shock
In standard tests, the relay has withstood 15g in each of three mutually perpendicular axes without structural damage or degradation of performance.

Vibration
In standard tests, the relay has withstood 2g in each of three mutually perpendicular axes swept over the range of 10 to 500 Hz for a total of six sweeps, 15 minutes each sweep, without structural damage or degradation of performance.

CONNECTIONS

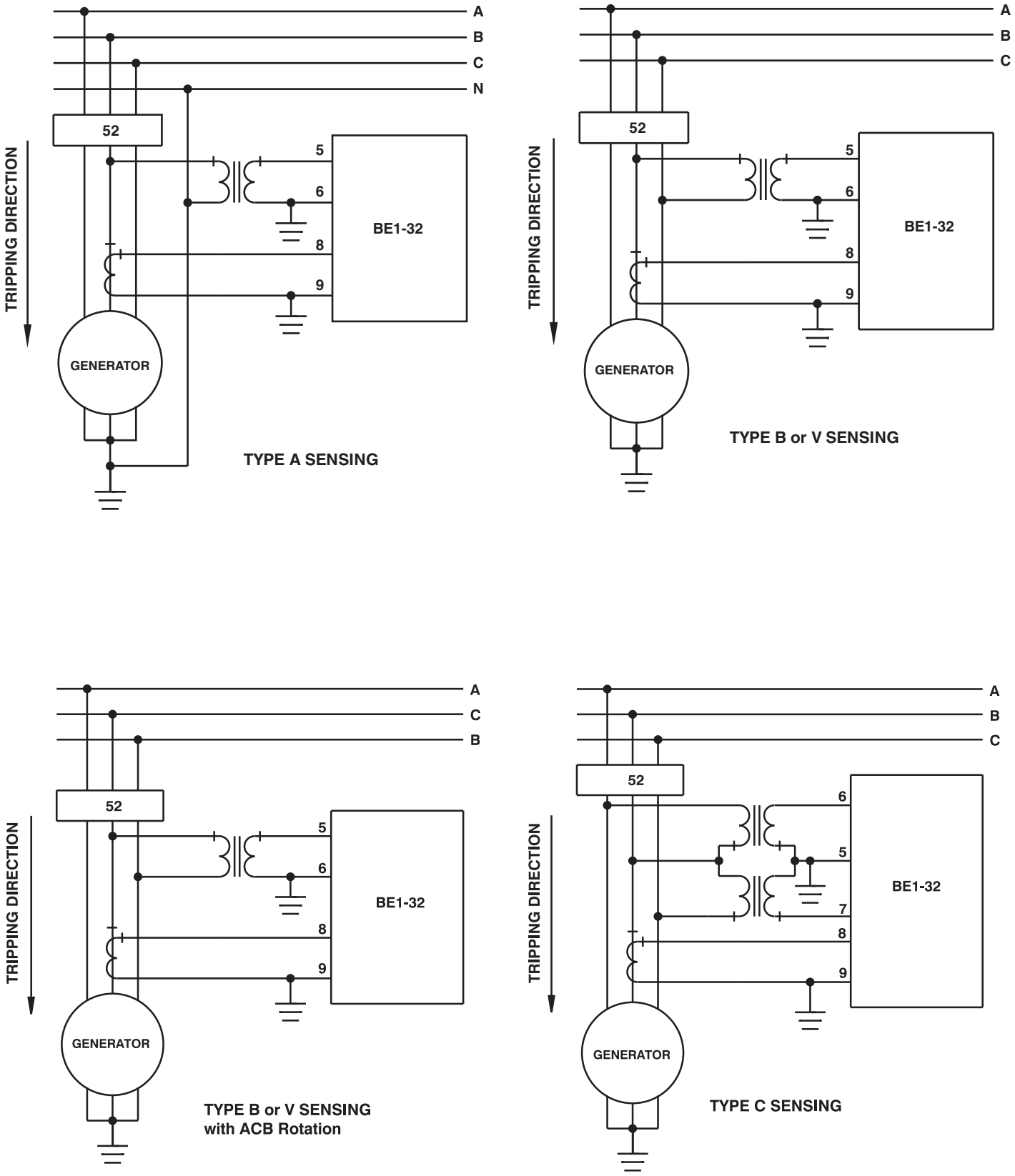

Figure 13 - Sensing Connections

(Continued next page)

CONNECTIONS
(continued)

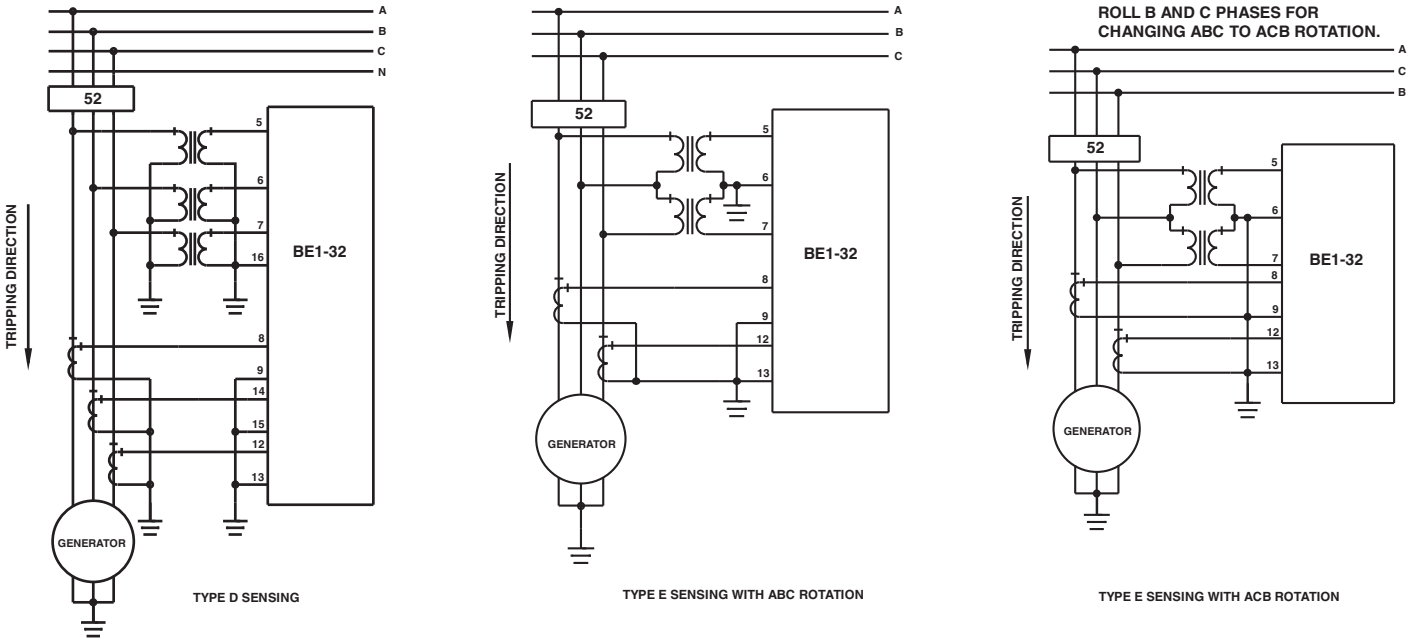

Figure 13 (continued) - Sensing Connections

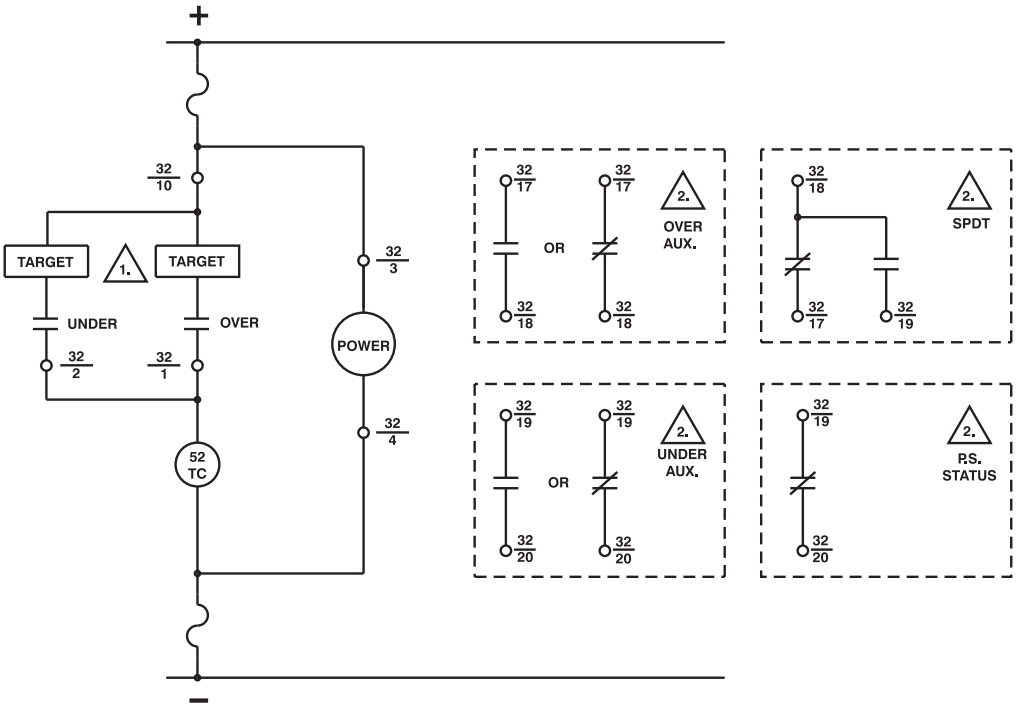

1. Overpower, underpower, and power supply status output contacts are optionally normally open or normally closed.

2. Auxiliary output contacts are optionally normally open, normally closed, or SPDT. If SPDT, power supply status is not available.

Figure 14 - Control Circuits

ORDERING

MODEL NUMBER

BE1-32R Directional Power Relay and BE1-32 O/U Directional Over/Underpower Relay.

STYLE NUMBER

The style number appears on the front panel, drawout cradle, and inside the case assembly. This style number is an alphanumeric combination of characters identifying the features included in a particular unit. The sample style number below illustrates the manner in which the various features are designated. The Style Number Identification Chart (page 12) defines each of the options and characteristics available for this device.

SAMPLE STYLE NUMBER A1EA1PA0N2F

The style number above describes a BE1-32R Directional Power Relay having the following features.

Sensing Input Type (A)		Single-phase current and L-N voltage sensing
Sensing Input Range (1)		120 Vac, 0.5-20W
Output	(E)	One Output relay with normally open contacts
Timing	(A1)	Instantaneous timing
Power Supply	(P)	125 Vdc/120 Vac input power supply
Target	(A)	One internally operated target
Option 1	(0)	None
Option 2	(N)	None
Option 3	(2)	One auxiliary output relay with normally closed contacts
Option 4	(F)	Semi-flush mounting

NOTE: The description of a complete relay must include both the model number and the style number.

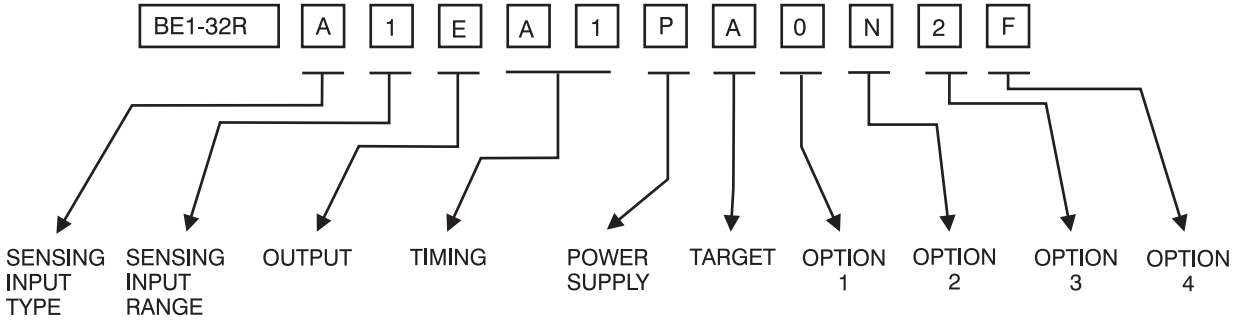

HOW TO ORDER:

Designate the model number followed by the complete Style Number.

Complete the Style Number by selecting one feature from each column of the Style Number Identification Chart and entering its designation letter or number into the appropriate square. (Two squares are used to indicate time delay characteristics.) All squares must be completed.

STANDARD ACCESSORY:

This accessory is available for the BE1-32R or BE1-32 O/U Directional Power Relays.

Test Plug
To allow testing of the relay without removing system wiring, order two test plugs, Basler Electric part number 10095.

STYLE NUMBER IDENTIFICATION CHART

BE1-32R
BE1-32O/U
MODEL NO.

0

SENSING INPUT TYPE (5)

A) Single-phase L-N Voltage

B) Single-phase L-L Voltage 30° phase shift (60 Hz)

C) Single-phase Current, Three-phase (Open Delta) Voltage, Scott T

D) Three-phase Current, Three-phase (Wye) Voltage, Three Element

E) Two-phase Current, Three-phase (Open Delta) Voltage, Two Element

V) Single-phase L-L Voltage 30° phase shift (50 Hz)

SENSING INPUT RANGE (1)

1) 0-5-20W, 120V (A,B,V)
1.5-60W, 120V_{LL} (C,E)
1.5-60W, 120V_{LN} (D)

2) 5-200W, 120V (A,B,V)
15-600W, 120V_{LL} (C,E)
15-600W, 120V_{LN} (D)

3) 25-1000W, 120V (A,B,V)
75-3000W, 120V_{LL} (C,E)
75-3000W, 120V_{LN} (D)

4) 1-40W, 208V (A,B,V)
3-120W, 208V_{LL} (C,E)
3-120W, 208V_{LN} (D)

5) 10-400W, 208V (A,B,V)
30-1200W, 208V_{LL} (C,E)
30-1200W, 208V_{LN} (D)

6) 50-2000W, 208V (A,B,V)
150-6000W, 208V_{LL} (C,E)
150-6000W, 208V_{LN} (D)

7) 1-40W, 240V (A,B,V)
3-120W, 240V_{LL} (C,E)
3-120W, 240V_{LN} (D)

8) 10-400W, 240V (A,B,V)
30-1200W, 240V_{LL} (C,E)
30-1200W, 240V_{LN} (D)

9) 50-2000W, 240V (A,B,V)
150-6000W, 240V_{LL} (C,E)
150-6000W, 240V_{LN} (D)

OUTPUT

E) One relay - NO BE1-32R only

F) Two relays - NO BE1-32O/U

G) One relay - NC BE1-32R

H) Two relays - NC BE1-32O/U

N) Two relays BE1-32O/U over - NO under - NC

P) Two relays BE1-32O/U over - NC under - NO

POWER SUPPLY

O) 48 Vdc

P) 125 Vdc/ 120Vac

R) 24 Vdc

T) 250 Vdc/ 240 Vac

TIMING

A1) Instantaneous: one set point- BE1-32R two set points- BE1-32O/U

D1) Inverse time: one adjustment- BE1-32R

D3) Inverse - over Definite - under (0.1-99 sec)

E1) Definite time (0.1-99 sec): one adjustment- BE1-32R two adjustments- BE1-32O/U

E2) BE1-32O/U Under-definite time (0.1-99 sec) over- instantaneous

OPTION 1

0) None

OPTION 2

N) None

S) Power supply status output

TARGET (2)

N) None

A) One internally operated target BE1-32R

B) One current operated target BE1-32R

C) Two internally operated targets, BE1-32O/U

D) Two current operated targets, BE1-32O/U

E) Two targets, BE1-32O/U over-internally operated under-current operated

F) Two targets, BE1-32O/U over-current operated under-internally operated

OPTION 3 (3) (4)

0) None

1) One auxiliary relay - NO

2) One auxiliary relay - NC

3) Two auxiliary relays - NO BE1-32O/U

4) Two auxiliary relays - NC BE1-32O/U

5) One auxiliary relay - SPDT

7) Two auxiliary relays, BE1-32O/U over - NO Under - NC

8) Two auxiliary relays, BE1-32O/U over - NC under - NO

OPTION 4

F) Semi-Flush Mounting

P) Projection Mounting

NOTES:

1. For use with the Sensing Input Type indicated in parentheses.

2. Current operated targets may be selected only when N.O. type output contacts are selected. Internally operated targets should be selected if the breaker control (trip) circuit is AC powered or the relay has N.C. type output contacts.

3. Option 3-3,4,5,7 or 8 may be selected only when Option 2 is N.

4. If model number is BE1-32O/U and Option 3 is 1,2, or 5, the associated auxiliary relay output applies to the overpower function only.

5. Sensing Input Types D and E require M1 case.

ISO 9001-2008/2000
Highland, IL USA Wasselonne, France
Taylor, TX USA Suzhou, China

Basler Electric
Route 143, Box 269, Highland, Illinois U.S.A. 62249
Tel +1 618.654.2341 Fax +1 618.654.2351
e-mail: info@basler.com
www.basler.com

P.A.E. Les Pins, 67319 Wasselonne Cedex FRANCE
Tel +33 3.88.87.1010 Fax +33 3.88.87.0808
e-mail: franceinfo@basler.com

No. 59 Heshun Road Loufeng District (N),
Suzhou Industrial Park, 215122, Suzhou, P.R.China
Tel +86(0)512 8227 2888 Fax +86(0)512 8227 2887
e-mail: chinainfo@basler.com

55 Ubi Avenue 1 #03-05 Singapore 408935
Tel +65 68.44.6445 Fax +65 65.68.44.8902
e-mail: singaporeinfo@basler.com

Printed in U.S.A.

Monitoring Relays
1-Phase True RMS AC/DC Over or Under Voltage
Types DUB01, PUB01

CARLO GAVAZZI

DUB01

PUB01

- **TRMS AC/DC over or under voltage monitoring relays**
- **Selection of measuring range by DIP-switches**
- **Measuring ranges from 0.1 to 500 V AC/DC**
- **Adjustable voltage on relative scale**
- **Adjustable hysteresis on relative scale**
- **Adjustable delay function (0.1 to 30 s)**
- **Programmable latching or inhibit at set level**
- **Output: 8 A SPDT relay N.D. or N.E. selectable**
- **For mounting on DIN-rail in accordance with DIN/EN 50 022 (DUB01) or plug-in module (PUB01)**
- **22.5 mm Euronorm housing (DUB01) or 36 mm plug-in module (PUB01)**
- **LED indication for relay, alarm and power supply ON**

Product Description

DUB01 and PUB01 are precise TRMS AC/DC over or under voltage (selectable by DIP-switch) monitoring relays.
Owing to the built-in latch function, the ON-position of the relay output can be maintained. Inhibit function can be used to avoid relay operation when not desired (maintenance, transitions).
The LED's indicate the state of the alarm and the output relay.

Ordering Key

DUB 01 C B23 10V

Housing
Function
Type
Item number
Output
Power supply
Range

Type Selection

Mounting	Output	Measuring range	Supply: 24 to 48 VAC/DC	Supply: 115/230 VAC
DIN-rail	SPDT	0.1 to 10 V AC/DC 2 to 500 V AC/DC	**DUB 01 C D48 10V** **DUB 01 C D48 500V**	**DUB 01 C B23 10V** **DUB 01 C B23 500V**
Plug-in	SPDT	0.1 to 10 V AC/DC 2 to 500 V AC/DC	**PUB 01 C D48 10V** **PUB 01 C D48 500V**	**PUB 01 C B23 10V** **PUB 01 C B23 500V**

Input Specifications

Input (voltage level)		
DUB01	Terminals Y1, Y2	
PUB01	Terminals 5, 7	
Measuring ranges		
Direct	**Int. resist.**	**Max. volt.**
Selectable by DIP-switches		
..10V: 0.1 to 1 V AC/DC	>200 kΩ	100 V
0.2 to 2 V AC/DC	>200 kΩ	100 V
0.5 to 5 V AC/DC	>200 kΩ	100 V
1 to 10 V AC/DC	>200 kΩ	100 V
Max. voltage for 1 s		200 V
..500V: 2 to 20 V AC/DC	>500 kΩ	350 V
5 to 50 V AC/DC	>500 kΩ	350 V
20 to 200 V AC/DC	>500 kΩ	600 V
50 to 500 V AC/DC	>500 kΩ	600 V
Max. voltage for 1 s		1000 V
Note: The input voltage cannot raise over 300 VAC/DC with respect to ground (PUB01 only)		

Contact input	
DUB01	Terminals Z1, Y1
PUB01	Terminals 8, 9
Disabled	> 10 kΩ
Enabled	< 500 Ω
Latch disable	> 500 ms

CARLO GAVAZZI

Output Specifications

Output	SPDT relay
Rated insulation voltage	250 VAC
Contact ratings ($AgSnO_2$)	µ
Resistive loads AC 1	8 A @ 250 VAC
DC 12	5 A @ 24 VDC
Small inductive loads AC 15	2.5 A @ 250 VAC
DC 13	2.5 A @ 24 VDC
Mechanical life	≥ 30 x 10^6 operations
Electrical life	≥ 10^5 operations (at 8 A, 250 V, cos φ = 1)
Operating frequency	≤ 7200 operations/h
Dielectric strength	
Dielectric voltage	≥ 2 kVAC (rms)
Rated impulse withstand volt.	4 kV (1.2/50 µs)

Supply Specifications

Power supply	Overvoltage cat. III (IEC 60664, IEC 60038)	
Rated operational voltage through terminals:		
A1, A2 or A3, A2 (DUB01)		
2, 10 or 11, 10 (PUB01)		
D48:	24 to 48 VAC/DC ± 15% 45 to 65 Hz, insulated	
B23:	115/230 VAC ± 15% 45 to 65 Hz, insulated	
Dielectric voltage	**DC supply**	**AC supply**
Supply to input	2 kV	4 kV
Supply to output	4 kV	4 kV
Input to output	4 kV	4 kV
Rated operational power		
AC	4 VA	
DC	3 W	

General Specifications

Power ON delay	1 s ± 0.5 s or 6 s ± 0.5 s
Reaction time	(input signal variation from -20% to +20% or from +20% to -20% of set value)
Alarm ON delay	< 100 ms
Alarm OFF delay	< 100 ms
Accuracy	(15 min warm-up time)
Temperature drift	± 1000 ppm/°C
Delay ON alarm	± 10% on set value ± 50 ms
Repeatability	± 0.5% on full-scale
Indication for	
Power supply ON	LED, green
Alarm ON	LED, red (flashing 2 Hz during delay time)
Output relay ON	LED, yellow
Environment	
Degree of protection	IP 20
Pollution degree	3 (DUB01), 2 (PUB01)
Operating temperature	-20 to 60°C, R.H. < 95%
Storage temperature	-30 to 80°C, R.H. < 95%
Housing	
Dimensions DUB01	22.5 x 80 x 99.5 mm
PUB01	36 x 80 x 94 mm
Weight	Approx. 150 g
Screw terminals	
Tightening torque	Max. 0.5 Nm acc. to IEC 60947
Approvals	UL, CSA
CE Marking	Yes
EMC	Electromagnetic Compatibillity
Immunity	According to EN 61000-6-2
Emission	According to EN 61000-6-3

Mode of Operation

DUB01 and PUB01 monitor both AC and DC over or under voltage.

Example 1
(no connection between terminals Z1, Y1 or 8, 9 - latch function disabled)

The relay operates when the measured value exceeds (or drops below) the set level for more than the set delay time.
It releases when the voltage drops below (or exceeds) the set level (see hysteresis setting), or when power supply is interrupted.

Example 2
(connection between terminals Z1, Y1 or 8, 9 - latch function enabled)

The relay operates and latches in operating position when the measured value exceeds (or drops below) the set level for more than the set delay time.
Provided that the voltage has dropped below (or has exceeded) the set point (see hysteresis setting) the relay releases when the interconnection between terminals Z1, Y1 or 8, 9 is interrupted, or power supply is interrupted as well.
The red LED flashes until the delay time has expired or the measured value has dropped below the set point (see hysteresis setting).

Note
When the inhibit contact is opened, if the input signal is already in alarm position, the delay time needs to elapse before relay activation.

Specifications are subject to change without notice (20.05.08)

CARLO GAVAZZI

Function/Range/Level and Time Delay Setting

Adjust the input range setting the DIP switches 1 and 2 as shown below.
Select the desired function setting the DIP switches 3 to 6 as shown below.
To access the DIP switches open the grey plastic cover as shown below.

Selection of level and time delay:

Upper knob:
Setting of hysteresis on relative scale: 0 to 30% on set value.

Centre knob:
Voltage level setting on relative scale: 10 to 110% on full scale.

Lower knob:
Setting of delay on alarm time on absolute scale (0.1 to 30 s).

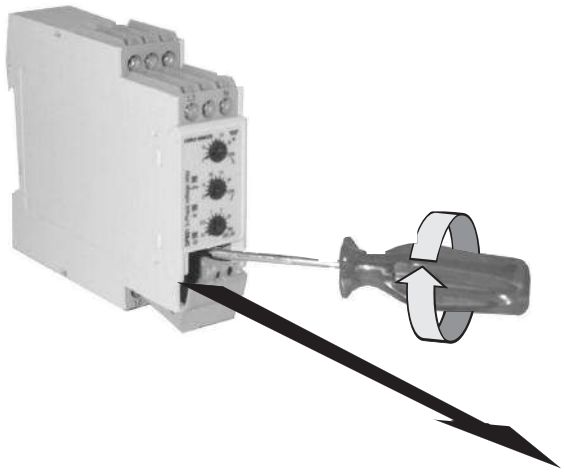

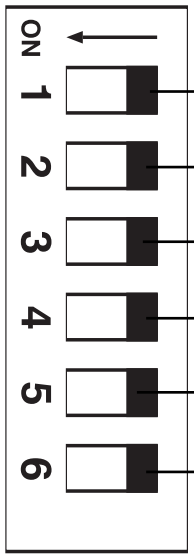

Measuring range

Model	500 V	10 V
ON OFF	20 V	1 V
OFF OFF	50 V	2 V
ON ON	200 V	5 V
OFF ON	500 V	10 V

Relay working mode
ON: Normally De-Energized
OFF: Normally Energized

Power ON delay
ON: 6 s ± 0.5 s
OFF: 1 s ± 0.5 s

Contact input
ON: Latch function enable
OFF: Inhibit function enable

Monitoring function
ON: Over voltage
OFF: Under voltage

Operation Diagrams

Over voltage - N.D. relay

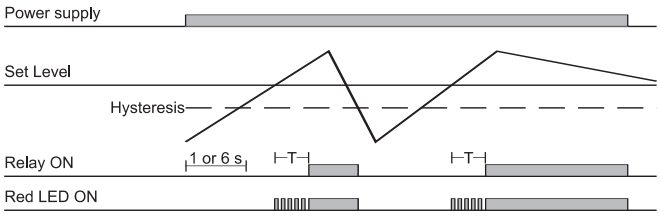

Under voltage - Latch function - N.D. relay

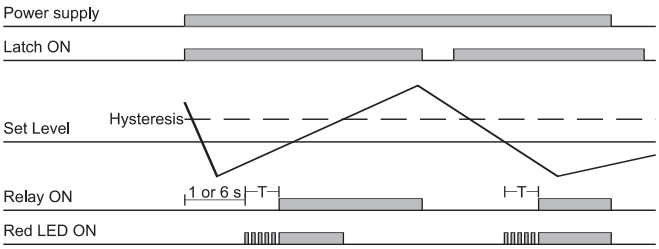

Under voltage - N.D. relay

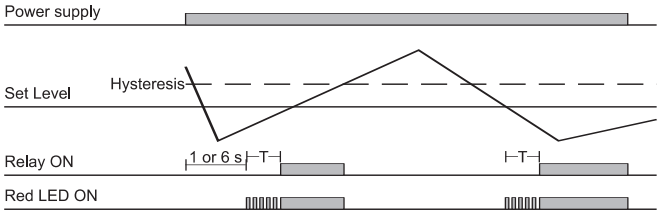

Over voltage - Inhibit function - N.D. relay

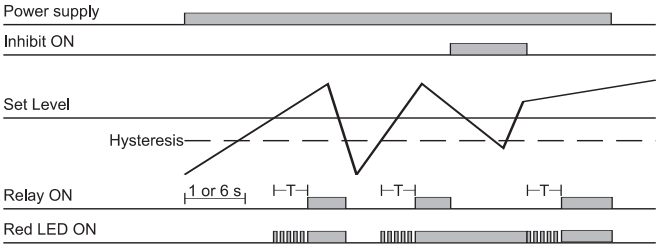

Wiring Diagrams

Example 1

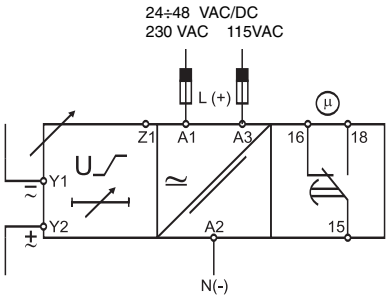

Example 2

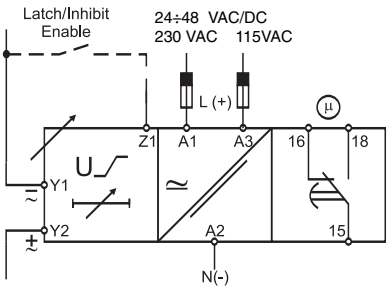

DUB01

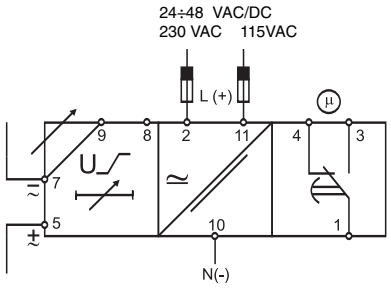

Example 2

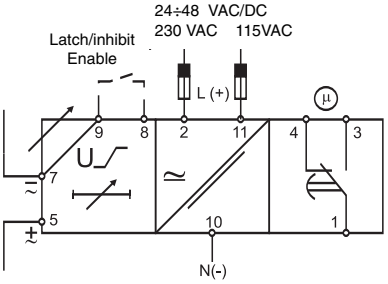

PUB01

Dimensions

DIN-rail

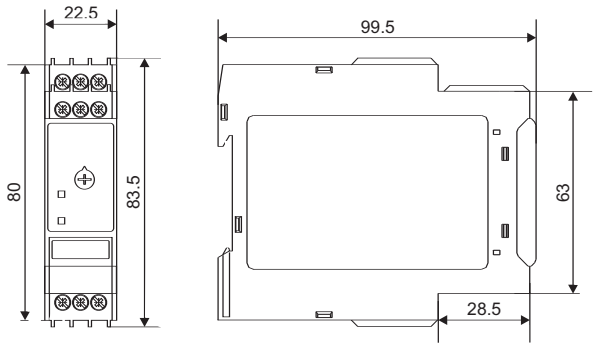

Plug-in

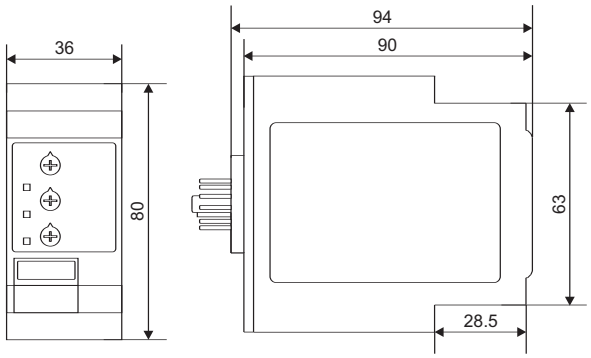

Specifications are subject to change without notice (20.05.08)

CLAROSTAT

Potentiometers, Decades and Dials

SMALL, 10-TURN 2-WATT POTENTIOMETER ONLY ¾" IN BODY LENGTH

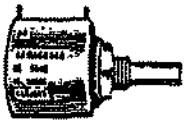

Series 73JA has brought the ten-turn potentiometer down in size, down in price and down in wear-outs. Only ¾" body length, and a rotational life of 500,000 cycles. Resistance Range: 100-100K ohms. Resistance Tolerance: ± 5%. Power Rating: At 20°C, 2 watts. Operating Temperature Range: -55°C to + 105°C. Temperature Coefficient: ± 20 PPM/° C max. End Resistance: 0.25% or 1 ohm. Noise During Adjustment (ENR): 100 ohms, maximum. Insulation Resistance: 1000 megohms at 500 VDC. Dielectric Strength: 1000 V ms. Actual Electrical Travel: 3600° + 10° -0°. Linearity: 0.25%, independent. Mechanical Torque: 0.5 oz.-in. maximum. Stop Strength: 75 oz.-in. minimum. To order, add resistance required to Clarostat No., example 73JA-100. See stock value, ohms, below.

73JA Resis. Range	Net Each, Lots of					
	1-9	10-24	25-49	50-99	100-249	250 Up
100-25K	$ 8.35	$ 7.77	$ 7.25	$6.77	$6.35	$5.92
50K	12.86	10.66	9.92	9.29	8.72	8.14
100K	13.55	11.24	10.45	9.77	9.19	8.56

Stock Value, Ohms	Nominal Resolution	Stock Value, Ohms	Nominal Resolution
100	.055%	5000	.020%
200	.037%	10K	.017%
500	.030%	20K	.015%
1000	.025%	50K	.011%
2000	.021%	100K	.009%

SERIES 381 1-WATT ⅝" DIA. POTENTIOMETERS

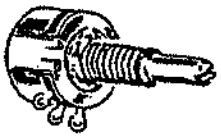

Clarostat "QuietOne" series, a new, low cost potentiometer with characteristics exceeding those of higher priced models. Features reliable, homogeneous, strain-free resistance element with 1% dynamic noise and 5% independent linearity. Mechanical parts precision machine-finished for smooth operation, long life. Manufactured to MIL-R-94 specifications. Resistance Tolerance: Linear, up to 500K ohms ± 10%; above 500K ohms, ± 20%. Power Rating: 1 watt max. continuous power rating for linear taper, but voltage not to exceed rating. Full rating at 70°C, derated linearity to zero watts at 120°C. Derate all non-linear tapers by multiplying wattage rating by 0.5. Mechanical and Rotation: 300° ± 5° with switch. Dynamic Noise: Linear single controls maximum initial noise level 1% of total resistance. Linearity: ± 5% independent. Working Voltage: 350 VDC across end terminals, power not to exceed rating. Models 381N have plain ¼" long bushing, ½" long shaft, screwdriver slotted. Models 381NS same, but equipped with attached SPST switch rated 1 amp at 125 VAC or DC. Models 381L have ⅜" shaft-locking bushing, 7/16" long shaft, screwdriver slotted. To order, add resistance required to Clarostat No., example: 381N-100. See Stock Values Table, below.

Clarostat Number	Shaft Length, Screwdriver Slotted	Bushing Length	Net Each, Lots of			
			1-9	10-49	50-99	100-249
381N	¾"	¼"	$4.62	$4.03	$3.44	$2.73
381NS	¾"	¼"	7.00	6.10	5.20	3.78
381L	7/16"	⅜"	4.92	4.26	3.64	2.65

SERIES 62JA TEN-TURN POTENTIOMETER

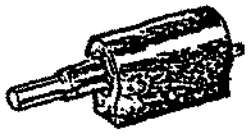

Opens new application areas for the advantages of multi-turn potentiometer design, including far greater resolution in trimming, better instrument control and settings for all types of electronic equipment. Resistance Tolerance: ± 5%. Functional Output: Linear. Absolute Linearity: ± 0.25%. Power Dissipation (At 25°C): 2 watts, derated to zero at 85°C. Dielectric Strength: 1000 VAC. Electrical and Mechanical Rotation: 3600°, + 10°, -0°. Maximum Torque: 3 oz.-in. Stop Strength: 50 oz.-in. Insulation Resistance: 1000 megohms. Life: 100,000 shaft rotations. Max. Rotation Speed: 60 rpm. Size: ⅞" dia. x 2½" overall.

Values from 100 Ohms to 25K:
Net Each, Lots of 1-9 ..... $14.79; 10-99 ..... $12.81; 100-Up $11.83
Values from 30K to 50K:
Net Each, Lots of 1-9 ..... $15.35; 10-99 ..... $13.30; 100-Up $12.28
Value of 100K:
Net Each, Lots of 1-9 ..... $17.25; 10-99 ..... $14.95; 100-Up $13.81

Stock Value, Ohms	Resolutions 100 Total Turns	Stock Value, Ohms	Resolutions 100 Total Turns
100*	.062%	5,000	.026%
200*	.048%	10,000	.024%
250*	.038%	20,000	.019%
500	.036%	25,000	.017%
1000	.030%	30,000	.016%
2000	.023%	50,000	.013%
2500	.022%	100,000	.012%

*Absolute linearity, ± 0.5%.

TABLE OF STOCK VALUES

Ohms				
100	1000	10K	100K	1.0 meg.
250	2500	25K	250K	2.5 megs
500	5000	50K	500K	5.0 megs

MODEL 240C PORTABLE DECADE

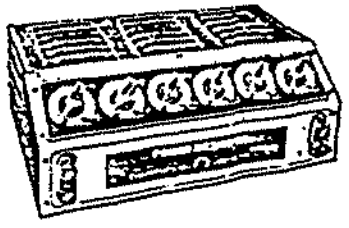

The Model 240C portable resistance decade allows the changing of resistance at a flip of a switch in a working circuit. Any ohms value can be obtained, from one ohm to 999,999 ohms, in steps of one ohm and at a maximum power rating of 225 watts, using a maximum of 1,000 volts DC or 660 volts AC. Dependable Clarostat "Greenohm" resistors are used throughout. These are inorganic-cement-coated, wire-wound power resistors. The resistors are mounted on rigid metal supports; a baffle plate separating the resistor bank from the switch assembly protects the latter against heat. Resistance changing switches are of the type that prevents a resistance breakdown between steps, thus protecting delicate meters and measuring instruments in the circuit. Pointer knobs indicate at a glance the resistance value being used.

Resistance Tolerance: ± 2.0% all decades except No. 1, ± 5.0%
Max. Current: 5 amps, No. 1; 1.5 amps, No. 2; 0.5 amp, No. 3; 0.15 amp, No. 4; 0.5 amp, No. 5; 0.005 amp, No. 6.

In a heavy gauge metal case, finished in frostec gray wrinkle, with an etched black-and-aluminum front panel. Overall length, 13", 8½" deep, 5¾" high. Weight, 11.5 lbs.

Model 240C Power Resistor Decade Box—Net $542.08

CLARODIALS—10-TURN CONCENTRIC SCALE DIALS

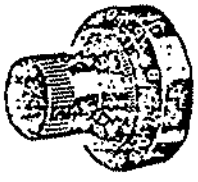

Calibrated dials designed for multi-turn potentiometers up to ten turns or other rotary devices. Requires only one inch of panel space. Knob attaches directly to the shaft, and the body of the dial is mounted rigidly to the panel. Therefore, accurate readings with a ratio of 1000 to one for 10 turns are provided with zero backlash and reading error. Made of anodized aluminum. Mounting requirements: ¼" shaft and ⅜"-32 NEF-2A bushing. Model 411 is black, has no lock. Model 412 is black, has lock. Model 461 is clear, has no lock. Model 462 is clear, has lock.

Clarostat No.	Net Each, Lots of			
	1-24	25-49	50-99	100-Up
411, 461	$ 9.88	$ 9.22	$8.56	$7.90
412, 462	10.76	10.04	9.32	8.61
1411, 1461	7.72	7.20	6.69	6.17
1412, 1462	8.43	7.86	7.31	6.74

ANSI Switchboard Meters

360° Rotary AC Synchroscope

KEY FEATURES

- 2.5 degrees accuracy
- Enhanced safety
- ANSI C39.1

APPLICATIONS

- Switchgear
- Distribution systems
- Energy management
- Process control
- Building management

APPROVALS

- c-UL UL listed file number E354483

The Crompton Instruments AC synchroscope measures and displays the frequency difference of two power sources. Monitoring the display allows the user to connect two synchronized AC power systems together. This can help prevent the potential damage caused by connecting two unsynchronized power sources.

The 4.50″ meter complies with ANSI C39.1 specifications.

Accessories

The ANSI Switchboard AC Synchroscope also comes with a range of accessories to complement the product.

- Neoprene panel gasket
- Terminal cover

TE connectivity ENERGY

Product Coding System

Model	Function
007-145A-PRAE-C5	120V AC, 50 Hertz
007-146A-PRAE-C6	120V AC, 60 Hertz
007-145A-RRAE-C5	240V AC, 50 Hertz
007-146A-RRAE-C6	240V AC, 60 Hertz
007-145A-SBAE-C5	415V AC, 50 Hertz
007-146A-SBAE-C6	415V AC, 60 Hertz

Product Code and Ordering Information Example: 007-146A-PRAE-C6

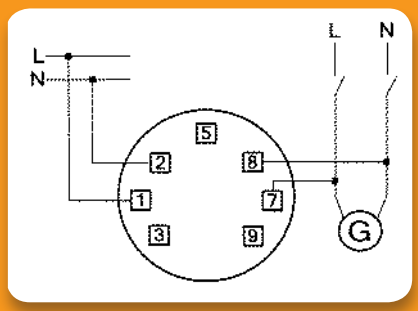

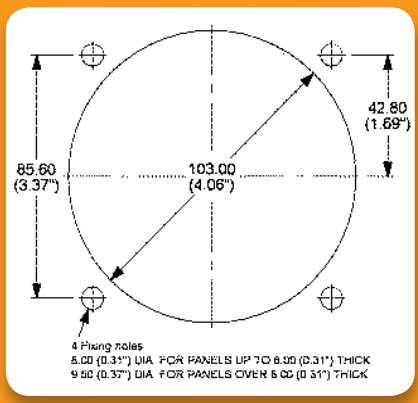

Panel Cut Out

Specifications

Rating, self-contained	120V AC
Frequency rating	50 or 60 Hertz (specify)
Normal operating position	On vertical panel unless otherwise specified at time of order
Position influence	Not more than 3.6 mechanical degrees deviation for up to 60° tilt from normal operating position
Accuracy	2.5 degrees
Overshoot	33% maximum
Response time	3 seconds maximum for 180° deflection
Sensitivity at synchronism	3 electrical degrees maximum
Operating temperature range	3% maximum in 5 oersted field
Pull in frequency	58Hz
Drop out frequency	57Hz
Dielectric test	Live parts to case, including panel: 2600V RMS for 1 minute
Between running and incoming circuits	1500V RMS for 1 minute
Overload	1.15% of rated voltage
Operating Temperature	-10°C - +45°C
Humidity	25% - 80%

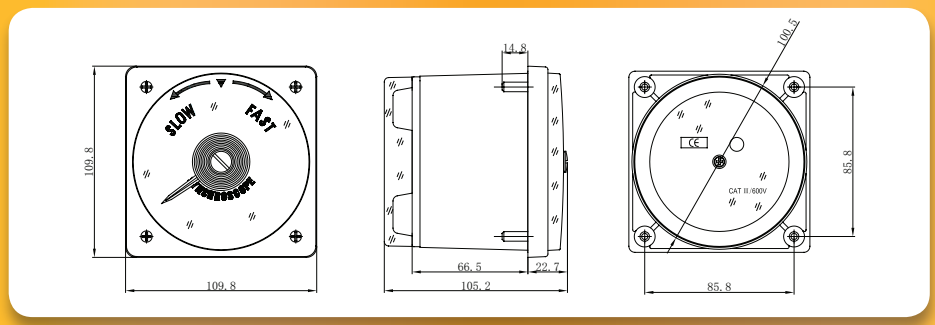

Product Dimensions

TE Technical Support Center

USA:	+1 (800) 327-6996
Canada:	+1 (905) 475-6222
Mexico	+52 (0) 55-1106-0800
Latin/S. America:	+54 (0) 11-4733-2200
UK:	+44 (0) 800-267666
France:	+33 (0) 1-3420-8686
Netherlands:	+31 (0) 73-6246-999
China:	+86 (0) 400-820-6015

cromptonusa.com
crompton-instruments.com
energy.te.com

© 2011-2013 Tyco Electronics Corporation,
a TE Connectivity Ltd. Company. All Rights Reserved.
4-1773460-8 E410 04/2013
TE Connectivity and TE connectivity (logo) are trademarks.
Crompton Instruments is a trademark of Crompton Parkinson Ltd. and is used under license.

While TE has made every reasonable effort to ensure the accuracy of the information in this brochure, TE does not guarantee that it is error-free, nor does TE make any other representation, warranty or guarantee that the information is accurate, correct, reliable or current. TE reserves the right to make any adjustments to the information contained herein at any time without notice. TE expressly disclaims all implied warranties regarding the information contained herein, including, but not limited to, any implied warranties of merchantability or fitness for a particular purpose. The dimensions in this brochure are for reference purposes only and are subject to change without notice. Specifications are subject to change without notice. Consult TE for the latest dimensions and design specifications.

Paladin Transducers

Class 0.5 250 Series

Features

- Suitable for driving meters, PLC's and control equipment over long distances
- Class 0.5
- Application in S.C.A.D.A., telemetry control and data acquisition systems
- High isolation and reliability
- CE Compliant (CE Marked)
- Flexible design with up to 3 analogue output transducers in one housing
- EMC, BSEN50082-2, BSEN50081-2
- UL approval N° E140758, CSA LR52592
- Bureau Veritas (BV) approved. File No. 3896H-07425-AOPRSOBV
- Designed to comply with EN60688, IEC688:1992
- Enclosure to IEC529 (IP50)
- Flame retardant
- Fixing 35mm DIN rail mount or via integral key hole slots

Transducers measure, isolate and convert electrical signals into industry standard D.C. output signals.

Introduction

Crompton transducers can be used for measuring all electrical quantities.
The following transducers can be supplied:

- A.C. and D.C. current and voltage.
- Active, reactive and apparent power.
- Frequency.
- Power Factor and Phase Angle.
- Integrating current for maximum demand indication and Alarm Control.
- Suppressed zero voltage for monitoring a narrow voltage range.
- Tap position on a high voltage transformer.
- Temperature transmitters for thermocouples and resistance thermometer detectors (RTD's).
- Resistance (slidewire) transmitters.

Safety Features

Crompton transducers and transmitters are designed for use in harsh electrical environments and feature:

- High protection against overload - up to 250 Amps for one second with current transducers.
- High degree of mechanical shock and vibration resistance.
- Protection against high voltage. Inputs, outputs and power supply are galvanically isolated from one another (excluding Resistance transmitters).

Application

- Measurement of all electrical values
- Conversion to standard d.c. output signals
- Outputs suitable for indication, PLC's
- For use in Control Cabinets, Switchboards, Motor Control Centres, Generating Sets, Energy Management & Building Management systems.

Ordering Information

When ordering please specify:

1. Product catalogue number
2 Current and/or voltage
3. Frequency
4. Auxiliary voltage A.C. or D.C.
5. Options e.g. calibration at 30°C
6. For power products:
   a. P.T. & C.T. ratios
   b. System configuration i.e. Single Phase, 3 Phase 3 or 4 Wire, balanced or unbalanced load
7. For slide wire transmitters quote R1, R2 and R3, see page G9.
8. National Specification:
   Indicated by 7th letter of part number.

Crompton INSTRUMENTS

Transducers

Paladin Transducers

Class 0.5 250 Series

Specification

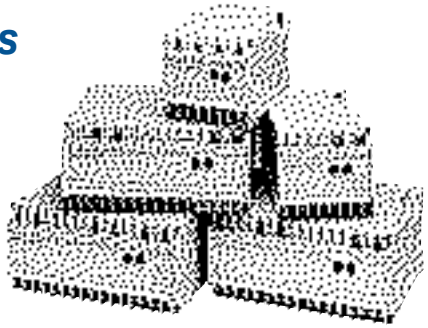

Performance	***Designed to comply with BS6253 part 1, EN60688, IEC688, AS1384 and ANSI. C37.***
Temperature Range:	Storage -20°C to +70°C Operating 0°C to +60°C Calibrated at 23°C
Temperature Coefficient:	0.03%/ per °C
Humidity Range:	Up to 95% RH
Zero Adjustment:	±2% minimum (except TAA & TVA)
Span Adjustment:	±10% minimum
Accuracy Class:	0.5 unless otherwise specified
Accuracy Range:	0 to 125% (except self powered)
Stability:	+0.25% per annum (reducing with time)
Test Voltage:	2kV ms to ANSI, C37
Response Time:	<400ms from 0 to 99% of rated output, 250 ms to 90%
D.C. outputs:	0/1mA into 0-10kΩ
(Typical)	0/5mA into 0-2kΩ 0/10mA into 0-1kΩ 0/20mA into 0-500Ω (600Ω available on selected models) 4/20mA into 0-500Ω (600Ω available on selected models) 0/5V 1k ohm minimum load 0/10V 1K ohm minimum load - bipolar for some models
Current Output Protection:	Fully protected against open and short circuited output
Voltage Output Protection:	Fully protected against open circuit output
Maximum output:	20V d.c. when open circuit
Output Ripple:	<0.5% of full rated output
Overoad Capacity:	2 x rated current or 1.25 x rated voltage continuous 10 x rated current or 1.5 x rated voltage for 10 seconds
Input Impedance: (d.c. I/P)	d.c. 1000 ohms/volt as standard 10k ohms/volt available on request
Input Burden:	a.c. <2VA
Auxiliary Burden:	<2VA a.c., <3.5W d.c. auxiliary voltage variation: ±20% a.c., ±15% d.c., maximum 14% ripple
Safety:	To IEC1010 with terminal cover, basic insulation category
Minimum Test Voltage:	2kV rms for 1 minute
Flammability:	Flame retardant
Isolation:	Input/Output/Supply/Case (except TRR, TRP, TRT and TRV with no input/output isolation)
Intereference:	Electrical stress surge withstand to IEC 688 part of IEC 801
Immunity:	and ANSI C37 90a Impulse test 5kV transient to IEC688 and IEC801
Enclosure:	IP50 to BS5490, IEC529 when the terminal cover is fitted. The case is UL94V0 and the terminal cover is UL94V2
Fixing:	EN50022
Approval:	UL recognised on most models (File No E140758)
EMC:	EMC withstand (see technical sheet T89/336) This product must be installed by a qualified engineer
Dimensions:	See page 13

Crompton INSTRUMENTS

Transducers

Class 0.5 Paladin Transducers

A.C. Current Average Sensing - Self Powered

Applications

- *Current measuring applications to 0.5% accuracy*

Features

- *Average sensing and calibrated to indicate the RMS value of a sine wave with less than 1% distortion*

Benefits

- *Internal power is derived from the input signal*
- *Input and output are isolated*

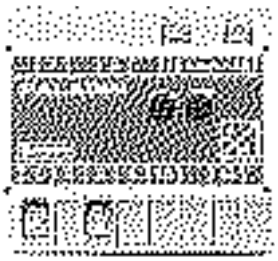

Specification

Inputs: 1, 5 or 10A A.C. 50 or 60 Hz

Auxiliary Power: Self Powered

Output: 0/1, 0/5, 0/10 and 0/20mA

Single Phase Current Transducer. - 1 D.C. Output.

Input A.C.	Aux Power	O/P D.C.	Catalogue No.	Connection Diag.
5A 60Hz	Self	0/1mA	253-TAA*-LSFA-C6	1

A.C. Current Average Sensing - Auxiliary Powered

Applications

- *Current measuring down to zero input*

Features

- *Model TAL provides a current output with a live zero (4-20mA)*
- *Single or three phase models*

Benefits

- *Average sensing and calibrated to indicate the RMS value of a sinewave with up to 1% distortion*
- *Isolation is provided between input, output and auxiliary*

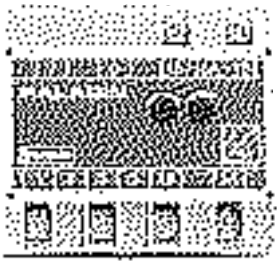

Specification

Inputs: 1, 5 or 10A A.C
50 or 60 Hz

Output: 01-, 0-5, 0-10, 0-20,4.20mA

Auxiliary Power:

A.C.: 63.5, 100, 110, 120, 220, 240, 250, 380, 400, 415, 440 and 480V A.C.

D.C.: 12, 24, 48, 110,120 or 135V D.C. nominal

Single Phase Current Transducer - 1 D.C. Output.

Input A.C.	A.C. Aux Power	O/P D.C.	Catalogue No.	Connection Diag.
5A 60Hz	120V	4/20mA	253-TAL*-LSHG-C6-DG	6

3 Phase Current Transducers - 3 D.C. Outputs.

Input A.C.	A.C. Aux Power	O/P D.C.	Catalogue No.	Connection Diag.
5A 60 Hz	120V	0/1mA	256-TAS*-LSFA-C6-DG	2
5A 60 Hz	120V	4/20mA	256-TAL*-LSHG-C6-DG	2

With multiple analogue outputs, do not common the -ve terminals.

Crompton INSTRUMENTS

Class 0.5 Paladin Transducers

True RMS Current

Applications

- *Measuring non standard and distorted waveforms*

Features

- *True RMS measurement of the input current*
- *Will accurately measure the true RMS current of distorted waveforms*

Benefits

- *Calibration is correct for sine waves having up to 30% of 3rd harmonic distortion*
- *Isolation is provided between input, output and auxiliary*

Specification

Inputs: 1.5 or 10A A.C., 50 or 60 Hz
Refer to factory for other inputs

Output: 01-, 0-5, 0-10, 0-20mA, 4-20mA

Auxiliary Power:
A.C. 63.5, 100, 110, 120, 220, 240, 250, 380, 400, 415, 440 and 480V A.C.
D.C. 12, 24, 48, 110,120, or 135V D.C.

Single Phase Current Transducer.

Auxillary Powered - 1 D.C. output.

Input A.C.	A.C. Aux Power	O/P D.C.	Catalogue No.	Connection Diag.
5A 60HZ	120V	0/1mA	253-TAR*-LSFA-C6-PQ	6

3 Phase Current Transducers

Auxillary Powered - 3 D.C. outputs.

Input A.C.	A.C. Aux Power	O/P D.C.	Catalogue No.	Connection Diag.
5A 60HZ	120V	0/1mA	256-TAR*-LSFA-C6-PQ	2

With multiple analogue outputs, do not common the -ve terminals.

Integrating Demand

Applications

- *Conveniently averages fluctuating input signals into a steady signal*

Features

- *The A.C. input model can provide a Maximum demand monitor*
- *Output is suitable for connection to our Protector Trip relays for level detection*
- *8, 15, 30 minute integration periods*

Benefits

- *The D.C. input model can accept the output from other transducers e.g. Watt for indicating integrated power, or RTD for average temperature*
- *RMS calibrated*

Specification

Inputs: 1 or 5A A.C., 50 or 60 Hz
0/1mA, 0/20mA, D.C.
0/5mA, 0/10mA, 0/20mA,
0/1V, 0/10V D.C.

Auxiliary Power: 63.5, 110, 120, 220, 240, 280, 415, 440, 480V A.C.

Single Phase A.C. Integrating Demand Current Transducer

Auxiliary Powered - 1 D.C. Output.

Input A.C.	Time Constant	O/P D.C.	Catalogue No.	Connection Diag.
5A 60Hz	8 Minutes	0/1mA	253-TAP*-LSFA-C6-DG	8
5A 60Hz	15 Minutes	0/1mA	253-TAN*-LSFA-C6-DG	8
5A 60Hz	30 Minutes	0/1mA	253-TAM*-LSFA-C6-DG	8

D.C. Integrating Demand Transducer

Auxiliary Powered - 1 D.C. Output.

Input D.C.	Time Constant	O/P D.C.	Catalogue No.	Connection Diag.
1mA	8 Minutes	0/1mA	253-TDP*-FAFA-DG	4
1mA	15 Minutes	0/1mA	253-TDN*-FAFA-DG	4
1mA	30 Minutes	0/1mA	253-TDM*-FAFA-DG	4

Crompton INSTRUMENTS

Class 0.5 Paladin Transducers

A.C. Current Bi-Directional

Applications

- *This transducer shows the magnitude and direction of an A.C. input current*

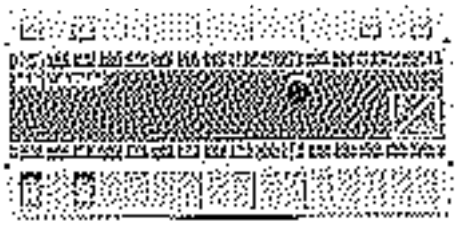

Specification

Inputs:

Voltage:	63.5, 100, 110, 120, 220, 240, 250, 380, 400, 415 and 480V A.C., 50 or 60 Hz
Current:	1 or 5A, 50 or 60 Hz

Auxiliary Power:	Self powered
Outputs:	±1mA/5mA/10mA/20mA

Single or 3 Phase System, Self Powered, 1 D.C. Output

Input A.C.	Aux Power	O/P D.C.	Catalogue No.	Connection Diag.
120V, 5A, 60Hz	Self	+/-1mA	256-TAB*-LSM1-C6-PQ-T3	3

Applications

- *Standard version for use in all voltage measuring applications*

Features

- *Average sensing for normal sinewave voltages*
- *Average sensing, RMS calibrated for sinewave with up to 1% of 3rd harmonic distortion*
- *Will allow measurement down to 20% of full input*

Benefits

- *The input signal provides operational power, thus avoiding the need for a separate supply*
- *The input is isolated from the output*

A.C. Voltage Average Sensing - Self Powered

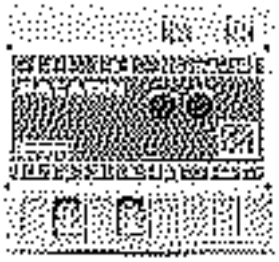

Specification

Inputs:	63.5, 100, 110, 120, 220, 240, 250, 380, 400, 415, 440V and 480V A.C. 50 or 60 Hz

Range:	20 to 125%
Auxiliary Power:	Self Powered
Outputs:	0/1, 0/5, 0/10 and 0/20mA

Single Phase, Self Powered, 1 D.C. Output

Input A.C.	Aux Power	O/P D.C.	Catalogue No.	Connection Diag.
120V 60Hz	Self	0/1mA	253-TVA*-PQFA-C6	10

Crompton INSTRUMENTS

Transducers

Class 0.5 Paladin Transducers

A.C. Voltage Average Sensing - Auxiliary Powered

Applications

- *Auxiliary power allows measurement of voltages down to zero*

Features

- *Average sensing and calibrated to indicate the RMS value of a sinewave with up to 1% distortion*
- *Model TVL provides a voltage input with a live zero (4-20mA)*

Benefits

- *All models have input and output isolation*

Specification

Inputs: 63.5, 100, 110, 120, 220, 240, 250, 380, 400, 415,440 and 480V A.C., 50 or 60 Hz

Output: 01-, 0-5, 0-10, 0-20,4.20mA

Auxiliary Power:
A.C. 100, 110, 120, 220, 240, 250, 380, 400, 415, 480V A.C.
D.C. 12V, 24V, 48V, 110,120V or 135V D.C.

Single Phase - Live Zero - A.C. Voltage Transducer, Auxiliary Powered - 1 D.C. Output

Input A.C.	A.C. Aux Power	O/P D.C.	Catalogue No.	Connection Diag.
120V	120V	4/20mA	253-TVL*-PQHG-C6-DG	15

3 Phase - Live Zero - A.C. Voltage Transducer, Auxiliary Powered - 3 D.C. Outputs

Input A.C.	System	O/P D.C.	Catalogue No.	Connection Diag.
120V	3 Phase 3 wire	4/20mA	256-TVL*-PQHG-C6-DG	11
120V	3 Phase 4 wire	0/1mA	256-TVS*-PQFA-C6-DG	11

With multiple analogue outputs, do not common the -ve terminals.

A.C. Voltage Suppressed Zero - Expanded Scale

Applications

- *Allows 'expanded scale' measurements at critical voltage levels*

Features

- *Average sensing and RMS calibrated*
- *Allows display of small changes within a large voltage*

Benefits

- *Isolation is provided between input and output*

3 in 1 models contain three totally isolated transducers

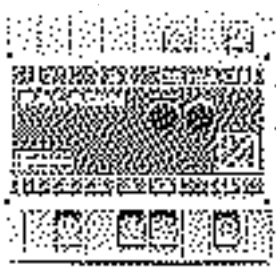

Specification

Inputs: Between ±10% and ±30% of nominal 63.5, 100, 110, 120, 139, 208, 220,240, 250, 277, 380, 400, 415, 440V and 480V A.C. 50 or 60 Hz

Outputs: 0/1mA D.C., 0/5mA, 0/10mA, 0/20mA D.C.

Single Phase - Suppressed Zero - A.C. Voltage Transducer, Self Powered - 1 D.C. Output

Input A.C.	A.C.Aux Power	O/P D.C.	Catalogue No.	Connection Diag.
108 - 132V	Self	0/1mA	253-TVZ*-A9FA-C6	15

Crompton INSTRUMENTS

Transducers

Class 0.5 Paladin Transducers

True RMS A.C. Voltage

Applications

- *True RMS voltage measurement*

Features

- *Calibration is maintained for sine waves having up to 30% of 3rd harmonic distortion*
- *Single or 3 phase measurement*

Benefits

- *Isolation is provided between input and output*
- *Measurement down to zero*

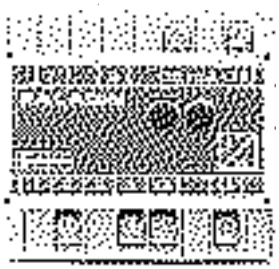

Specification

Inputs:	63.5, 100, 110, 120, 220, 240, 250, 380, 400, 415, 440V and 480V A.C., 50 or 60 Hz	**Auxiliary Power:**	
		A.C.:	100, 110, 120, 220, 250, 380, 400, 415 and 480V A.C.
D.C. Outputs:	0/1mA D.C., 0/5mA, 0/10mA, 0/20mA, 4/20mA D.C.	D.C.:	12V, 24V, 48V, 110,120V or 135V D.C.

Single Phase. Voltage Transducer, Auxiliary Powered - 1 D.C. Output

Input A.C.	A.C.Aux Power	O/P D.C.	Catalogue No.	Connection Diag.
120V 60Hz	120V	0/1mA	253-TVR*-PQFA-C6-DG	15

3 Phase. Voltage Transducers.

Auxilary Powered - 3 D.C. outputs.

Input A.C.	A.C.Aux Power	O/P D.C.	Catalogue No.	Connection Diag.
120V 60Hz	120V	0/1mA	256-TVR*-PQFA-C6-DG	11

With multiple analogue outputs, do not common -ve terminals.

Applications

- *Monitoring A.C. frequency*
- *Process Control monitoring*
- *Data acquisition*

Features

- *For measurement of power frequencies and to provide a D.C. output which is directly proportional to the change of input within a specified span*
- *A simple and reliable transducer for measuring the supply frequency of mains and gensets*

Benefits

- *Isolation is provided between input and output*

Frequency Transducer

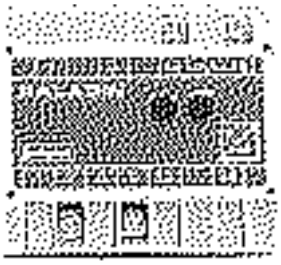

Specification

Frequency:	45-55Hz, 55-65Hz 45-65Hz, 360-440Hz	**Outputs:**	0/1mA, 4/20mA 0/5mA, 0/10mA, 0/20mA
Inputs:	63.5, 100, 110, 120, 220, 230, 240, 380, 400, 415, 440, and 480V 50 or 60 Hz Refer to factory for other inputs	**Auxiliary Powered:**	Self Powered
		Accuracy:	0.1% of mid Frequency

Single Frequency Transducer, Self Powered - 1 D.C. Output

Input A.C.	Frequency	O/P D.C.	Catalogue No.	Connection Diag.
120V	45/55Hz	0/1mA	253-THZ*-PQFA-AG	10
120V	55/65Hz	0/1mA	253-THZ*-PQFA-AN	10
120V	45/65Hz	0/1mA	253-THZ*-PQFA-AJ	10
120V	360/440Hz	0/1mA	253-THZ*-PQFA-BI	10

Crompton INSTRUMENTS

Class 0.5 Paladin Transducers

Tap Position Transmitter

Applications

- *For accurate remote indication of tap position selection, on a high voltage transformer*
- *The variable tap position voltage is monitored*
- *A D.C. output produced which is proportional to the tap position*

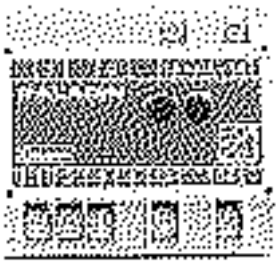

Specification

Input Span: 1-20k
5-50 taps at 400Ω each
10-50 taps at 30Ω each

Outputs: 0/1mA, 4/20mA
0/5, 0/10, 0/20mA

Auxiliary Power:
A.C. 110, 120, 220, 240, 380, 415V
63.5V, 139, 208, 277, 440, 480V
D.C. 12, 24, 48, 120, 135V D.C.

Tap Position Transmitter, Auxiliary Powered

Taps	Ohm	O/P D.C.	Catalogue No.	Connection Diag.
10-50	30	0/1mA	253-TRT*-TIFA-DG	12
5-50	400	0/1mA	253-TRT*-T5FA-DG	12

Slide Wire Transmitter

Applications

- *Designed for accurate measurements and transmission of resistance ratio of a 3 wire potentiometer*
- *A stabilised voltage is applied to the potentiometer and the voltage measured from the zero to the end of the wiper. This is amplified and the D.C. output produced is proportional to the resistance value*

Specification

Input Span: Minimum 1kΩ Max 50kΩ
Specify values of R1, R2, R3
Example for 1k Potentiometer:
R1 = 1k, R2 = 0, R3 = 1k
Example for 5k Potentiometer using only 4k
R1 = 5k, R2 = 1k, R3 = 4k
Remember R1 = R2 + R3

Outputs: 0/1mA
0/5, 0/10, 0/20mA or 4-20mA
0/1, 0/5, 0/10V D.C.

Auxiliary Power:
A.C. 110, 120, 220, 240, 380, 415V
63.5, 139, 208, 277, 440, 480V
D.C. 12, 24, 48,110, 120 or 135V D.C.

Note:

Not all applications provide for the slider to mechanically travel the full distance along the resistor track. Normally the first resistor step is inside the transducer and its value should be stated when ordering, as well as the total track resistance.

End of track or connecting lead resistance, if significant, should also be considered. For satisfactory operation, the change in resistance should be greater than 20% of the total resistance.

Side Wire Transmitter (3 wire), Auxiliary Powered

Input (Specify)	A.C. Aux Power	O/P D.C.	Catalogue No.	Connection Diag.
R1, R2, R3	120V	0/1mA	253-TRP*-TRFA-DG	12

Crompton INSTRUMENTS

Class 0.5 Paladin Transducers

Linear Integrator Pulsed Output Transducer

Applications

- Typical applications result in pulses proportional to kilowatt-hours, Ampere hours, litre-hours etc., depending on the transducer or transmitter used

Features

- *Accepts inputs in the form of a process signal derived from transducers or transmitters and integrates them with respect to time, to produce a pulsed output via volt free relay contacts*
- *Converts a D.C. input into a pulsed output*

Benefits

- *Kilowatt hour and Ampere hour measurement*

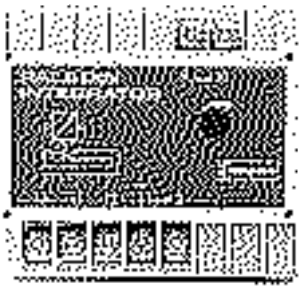

Specification

Inputs:	0/1mA, 4/20mA, 0/5mA, 0/10mA, 0/20mA, 0/1V D.C., 0/10V D.C.	**Pulse rate:**	Minimum 100/hour maximum 10,000/hour, specify.
Output:	Volt free relay contacts.	**Auxiliary Power:**	63.5, 110, 120, 139, 208, 220, 240, 277, 380, 415 440, 480V A.C.

Linear Integrator

Input	Pulses per hour	A.C. Aux Power	Catalogue No.	Connection Diag.
0/1mA	Specify	120V	253-TIK*-FAPO-DG	13

Signal Isolator

Applications

- *The signal isolator is designed for use in signal transmission and processing applications to prevent noise and interference caused by ground loops between signal source and the measuring device*

Benefits

- *The isolator provides galvanic isolation between source and measuring device*
- *Low cost and safe solution to noise interference problems*
- *No external power. High voltage isolation*

Specification

Input/Output Ratio:	1 to 1	**Load Range:**	0-500 ohms @ 20mA D.C.
Max Input/Output:	20mA to D.C.	**Output Voltage:**	I out x R Load limited to 15V
Accuracy:	0.2% at 250 ohms	**Input Voltage:**	Typically I x (load + 200Ω) limited to 18V
Isolation:	660V A.C., 930V D.C. continuous	**UL File Number:**	E149713N
Test Voltage:	1.5kV at 50Hz for 1 minute	**CSA File Number:**	LR52592

Signal Isolator

Input D.C.	O/P D.C.	Catalogue No.	Connection Diag.
20mA	0/20mA	250-ISA*-HF	5

Crompton INSTRUMENTS

Transducers

Class 0.5 Paladin Transducers

D.C. / D.C. & Temperature

Applications

- *Suitable for data acquisition systems and process control monitoring*

Features

- *Suitable for D.C. input signals over a wide range*

Benefits

- *Provides galvanic isolation. The input is electrically isolated from the output signal*
- *Produces an output directly proportional to the input*

Principle of Operation (Thermocouple)

The principle of operation is identical to the D.C. signal unit. In addition, these units incorporate cold-junction compensation (CJC) for all Base Metal thermocouples and thermocouple break protection.

Specification

Inputs:

D.C. Voltage:	Any value between 10mV to 600V
D.C. Current:	Any value between 100µA to 10A

Thermocouple Models:

A range of temperature transmitters suitable for use with a variety of thermocouples.

Inputs: The most popular types are:

J-Fe/Const	0-700°C
K-NiCr/NiA	0-1200°C
T-Cu/Cn	0-200°C

Auxiliary Power:

A.C.:	63.5, 110, 120, 220, 240, 380, 415, 440 and 480V A.C.
D.C.:	12, 24, 48, 110,120 or 135V D.C.

D.C. / D.C. and Temperature Transducer

Input	O/P D.C.	A.C. Aux Power	Catalogue No.	Connection Diag.
D.C. Current	0/1mA	120V	256-TTA*-**FA-DG	18
D.C. Millivolts	0/1mA	120V	256-TTM*-**FA-DG	18
D.C. Voltage	0/1mA	120V	256-TTV*-**FA-DG	18
Thermocouple				
Type K	0/1mA	120V	256-TTN*-KTFA-DG	18
Type T	0/1mA	120V	256-TTC*-TTFA-DG	18
Type J	0/1mA	120V	256-TTF*-JTFA-DG	18

Resistance Transmitter

Applications

- *A simple and convenient way of measuring and transmitting values of temperature in the form of a load independent D.C. signal*

Features

- *They detect varying resistance due to temperature change at the RTD (Resistance Temperature Detector)*
- *Designed for platinum (Pt.100), Copper (Cu 10) or Nickel (Ni100) RTDs*

Specification

Input:	100Ω Platinum - (Pt100) 10Ω Copper, 100Ω Nickel
Outputs:	0/1mA, 0/5mA, 0/10mA, 0/20mA, 4/20mA,

Auxiliary:

A.C.:	110, 120, 220, 240, 380, 415V
D.C.:	12, 24,48,110,120 or 135V D.C.

Resistance Transmitter

Input	O/P D.C.	A.C. Aux Power	Catalogue No.	Connection Diag.
10 Ohms copper RTD	0/1mA	120V	253-TRR*-R1FA-DG	17
100 Ohms PT RTD	0/1mA	120V	253-TRR*-R2FA-DG	17

Ordering Information

Input span can be specified in temperature or resistance. The resistance value between lowest and highest temperature being measured must be within limits stated.

Platinum:	20Ω minimum span 200Ω maximum span
Copper:	2Ω minimum span 20Ω maximum span
Nickel:	20Ω minimum span 200Ω maximum span

Crompton INSTRUMENTS

Transducers

Class 0.5 Paladin Transducers

Power Transducers

Applications

- *A wide range of transducers to measure all forms of power*

Features

- *In single or 3 phase balanced or unbalanced, 3 or 4 wire systems*
- *For large voltage variations use the auxiliary powered versions*

Benefits

- *Self powered units permit voltage variations up to +20% of the nominal input*
- *Measures both import and export power*

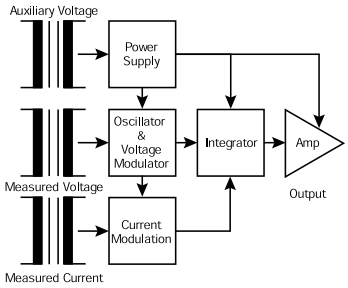

Principle Of Operation

These Transducers utilise the well proven 'time division multiplication' method of measuring instantaneous power over a wide range of input waveforms. In the self powered version the system voltage provides both power supply and an input to the voltage modulation circuit of an oscillator. Square wave pulses from a multi-vibrator circuit with a mark-space ratio varied by the measured voltage, and amplitude varied by the measured current, are fed to an integrator and an output amplifier circuit. The D.C. milliamp signal produced is therefore directly proportional to the power input.

All inputs are isolated by the use of transformers.

Specification

Input Voltage:	63.5, 110, 120, 150, 208, 220, 240, 277, 380, 415, 480V	**Auxiliary Power:**	Self Powered
Current:	1, 5, 10A	**A.C.:**	63.5, 110, 120, 150, 208, 220, 240, 277, 380, 415, 480V
Frequency:	50 or 60 or 400Hz	**D.C.:**	12, 24, 48, 120, 135V
Outputs:	0/1mA, 0/5mA, 0/10mA, 0/20mA, 4/20mA		

Watt Transducer	Catalogue No.	Connection Diag.
Single Phase	256-TWK	14
3 Phase 3 Wire Balanced Load	256-TWL	19
3 Phase 4 Wire Balanced Load	256-TWH	24
3 Phase 3 Wire Unbalanced Load	256-TWM	20
3 Phase 4 Wire Unbalanced Load	256-TWN	35
3 Phase 3 Wire Balanced Load (2 Voltage connections)	256-TWS	38

VAr Transducer	Catalogue No.	Connection Diag.
Single Phase	256-TXK	14
3 Phase 3 Wire Balanced Load	256-TXG	34
3 Phase 4 Wire Balanced Load	256-TXH	42
3 Phase 3 Wire Unbalanced Load	256-TXM	20
3 Phase 4 Wire Unbalanced Load	256-TXN	40
VA Transducer		
Single Phase	256-TYK	14
3 Phase 3 Wire Balanced Load	256-TYG	41
3 Phase 4 Wire Balanced Load	256-TYH	42
3 Phase 3 Wire Unbalanced Load	256-TYM	20
3 Phase 4 Wire Unbalanced Load	256-TYN	35

Conversion to P.F.

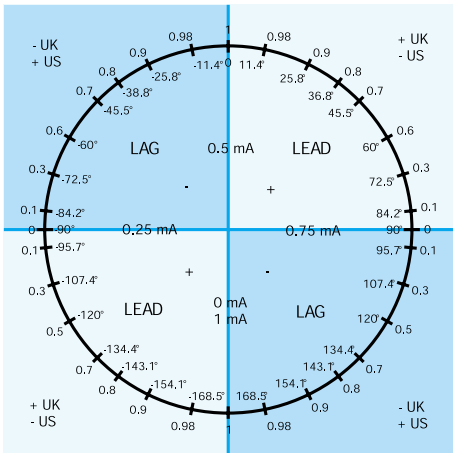

The transducer output, if displayed on an analogue meter, produces an inconvenient non-linear scale. Computer users may find the need for a linearising program.
Other transducers are available from Crompton Instruments with a linearised output if required.

Crompton INSTRUMENTS

Transducers

Class 0.5 Paladin Transducers

Power Factor and Phase Angle

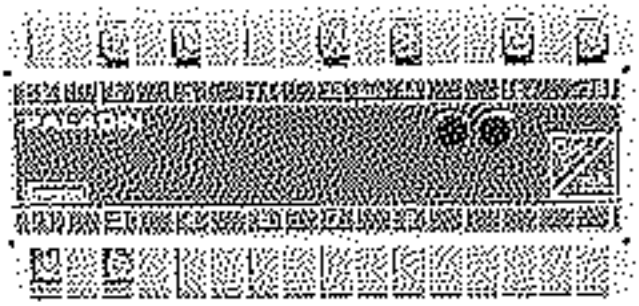

Power Factor Transducer (for Digital Meters & Systems)

3 Phase 3 or 4 Wire Balanced Load

Power Factor	Catalogue No.	Connection Diag.
Single Phase 0.5/1/0.5	256-TDSU	43
Single Phase 0/1/0	256-TDCU	43
Single Phase 1/0/1/0/1	256-TDAU	43
3 Phase 3 or 4 Wire Balance Load 0.5/1/0.5	256-TDTU	45
3 Phase 3 Wire Balance Load 0/1/0	256-TDEU	46
3 Phase 3 or 4 Wire Balance Load 1/0/1/0/1	256-TDBU	46

Note: These products are only suitable for 50Hz or 60Hz operation.

Phase Angle Transducers Single Phase

3 Phase 3⁄4 Wire Balanced Load 2 or 4 Quadrant

Phase Angle	Catalogue No.	Connection Diag.
Single Phase 60/0/60 75/0/36 0.5/1.0/0.5 or 0.2/1/0.8	256-TPSU	14
Single Phase -180°/0/180°	256-TPAU	14
3 Phase 3 or 4 Wire Balanced Load 0.5/1/0.5 or 0.2/1/0.8	256-TPTU	42
3 Phase 3 or 4 Wire Balanced Load -180°/0/180°	256-TPBU	19

Power Factor Transducer (Suits Analogue Indicators) Single Phase

3 Phase 3 or 4 Wire Balanced Load
Accuracy +/- 3% of Span, i.e. 0.03 counts on 0.5/1/1/0.5 model.

Power Factor	Catalogue No.	Connection Diag.
Single Phase - 0.5/1/0.5	256-TFSU	14
Single Phase - 0/1/0	256-TFCU	14
Single Phase - 1/0/1/0/1	256-TFAU	14
3 Phase 3 or 4 Wire Balanced Load 0.5/1/0.5	256-TFTU	42
3 Phase 3 Wire Balanced Load 0/1/0	256-TFEU	19
3 Phase 3 Wire or 4 Wire Balanced Load 1/0/1/0/1	256-TFBU	19

Note: These products are only suitable for 50Hz or 60Hz operation.

Phase Relationship Transducer

Phase Relationship	Catalogue No.	Connection Diag.
Measures the phase relationship between two systems (voltage inputs)	256-TPDU	36

Crompton INSTRUMENTS

Transducers

Class 0.5 Paladin Transducers

Dimensions

Model 250

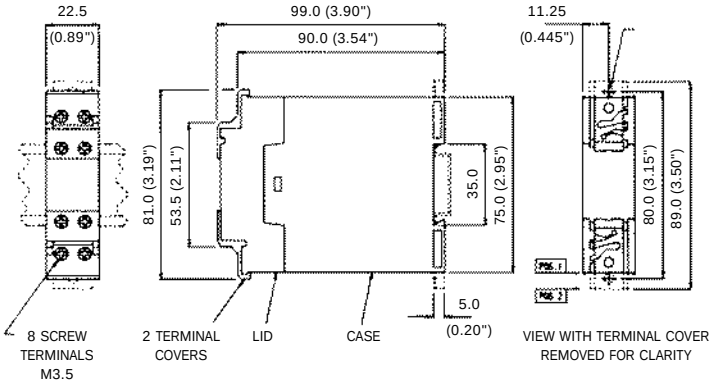

Model 252

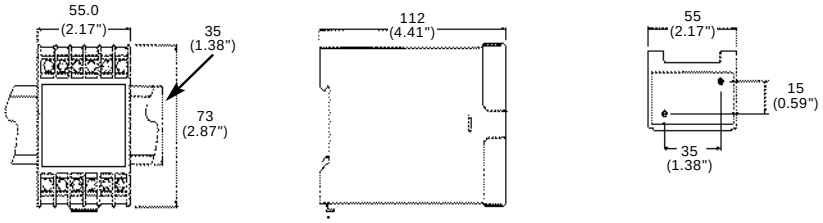

Model 253, 256

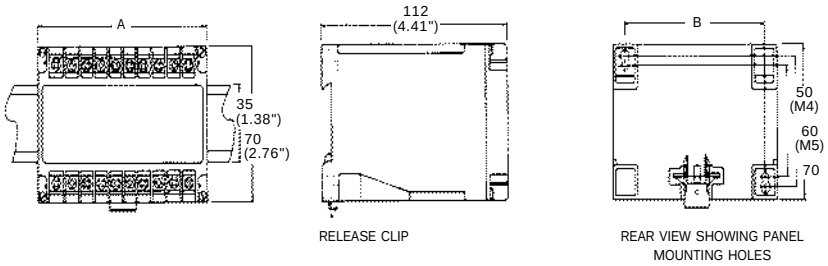

Model	A		B	
	mm	inches	mm	inches
250	22.5	0.88	-	-
252	55	2.17	-	-
253	75	2.96	60	2.36
256	150	5.90	135	5.31

Mounting Details

Position 1 - DIN Top Hat Rail Mounting (DIN ENS0022-35)

Position 2 - Screw Mounting To Suit M4 Fixings

Crompton INSTRUMENTS

Transducers

tyco / Electronics / Energy Division

Protector Trip Relays

250 Series DIN Rail and Wall Mounted - Synchro - Check (Paralleling)

Protection ensures

- *Frequency matching*
- *Voltage matching*
- *Phase angle matching*

Application

- *Co-generation*
- *Generator sets*
- *Gen-Bus synchronising*
- *Bus-Bus synchronising*
- *Assists in manual synchronising*
- *Monitors auto synchronising systems*

We also manufacture front of panel mounting electro-mechanical or electronic synchroscopes, and synchro check relays

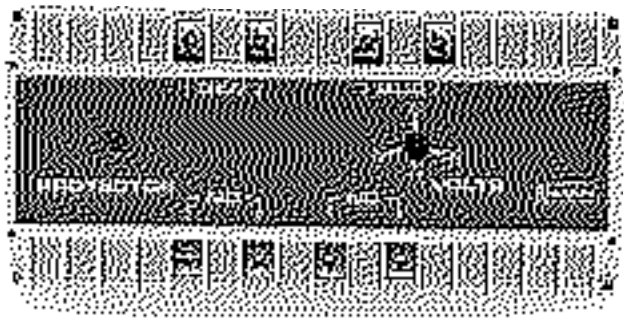

The Crompton Synchro check relay can be used to assist in the semi-automatic paralleling of two ac power systems.

The volt-free relay contacts change state when the voltage level, phase relationship and frequency are within the selected synchronising limits.

Introduction

As part of a manual control system, the operator will make adjustments the Voltage (excitation) and frequency (engine speed) using a synchroscope or lamps, and will then attempt to manually close the breaker. This synch check protector will qualify that the two systems are closely matched before permitting the breaker to close.

As part of an automatic synchronising arrangement, this relay can be used as an independent backup or checking device to ensure the two systems are suitably matched before the breaker can close.

Connecting two electrical systems that are not closely matched can cause expensive damage and disturbance to the electrical system. Using this relay will ensure that damage will not occur.

Product Function - 256-PLL

The relay continuously monitors the Voltage, phase displacement and frequency of two supplies. A single setpoint adjustment permits selection of suitable matching, and a red LED illuminates when the relay is energized, indicating that the two supplies are well matched - OK to close the breaker.

The relay contacts can be used in the main breaker circuit to disable a close command until both gensets are within acceptable limits.

Operating power is taken from the generator supply.

Additional Feature - 256-PLD

This version operates as explained above, but includes a dead bus detection function.

If there is a requirement for a continuous supply or emergency power, then the generator can be connected without synchronizing, to ensure continuity of supply. The absence of bus voltage will cause the relay to energize.

Crompton INSTRUMENTS

Protector Relays

Protector Trip Relays

250 Series DIN Rail and Wall Mounted - Synchro - Check (Paralleling)

Specification

Approvals:	U.L. recognized up to 300V.
Nominal Voltage:	100, 110, 120, 208, 220, 230, 240, 277, 380, 400, 415, 440 & 480V
Voltage tolerance:	-25% to +30% of the nominal voltage
Frequency:	45 or 50 or 55 or 60 or 65Hz
Burden maximum:	Bus 2VA, Generator 4VA
Setpoint Synchronising:	
Set point:	10% to 30% of the nominal voltage
Adjustment:	(6° to 20° electrical)
Weight:	Approximately 0.85kg
Output Relay:	
Relay contacts:	1 pair NO*, 1 pair NC*

*2 pair NO and 2 pair NC available on request.

Product Code Examples

Relay	Input	Protection	ANSI No.	Catalogue No.
Single Phase or 3 Phase	120V, 60Hz	Phase Angle & Voltage	25	Live bus 256-PLLU-PQBX-C6
3 or 4 Wire	120V, 60Hz		25	Dead Bus 256-PLDU-PQBX-C6

Connection Diagrams

256-PLL
256-PLD

System	Generator Connections 1	Generator Connections 2	Busbar Connections 3	Busbar Connections 4
3 phase 4 wire	L1	N	L1	N
3 phase 3 wire	L1	L2	L1	L2
1 phase 2 wire	L1	N	L1	N

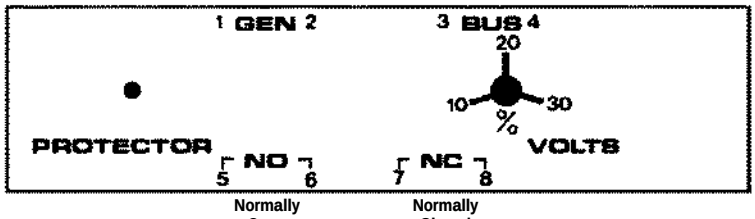

Normally Open Contacts — Normally Closed Contacts

Crompton INSTRUMENTS

Protector Relays

Protector Trip Relays

250 Series DIN Rail and Wall Mounted - Dimensions

DIN Rail and Wall Mounted

Model 252

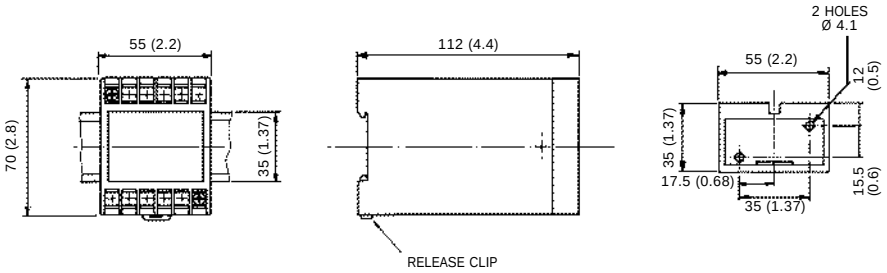

Model 253

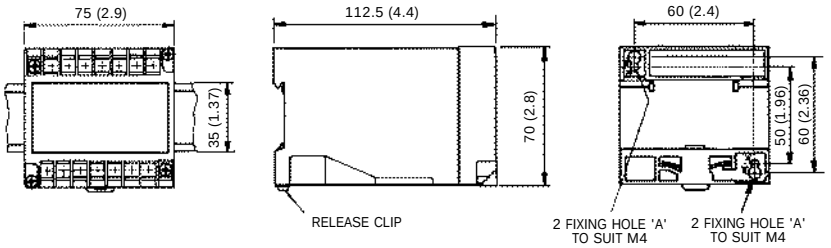

Model 256

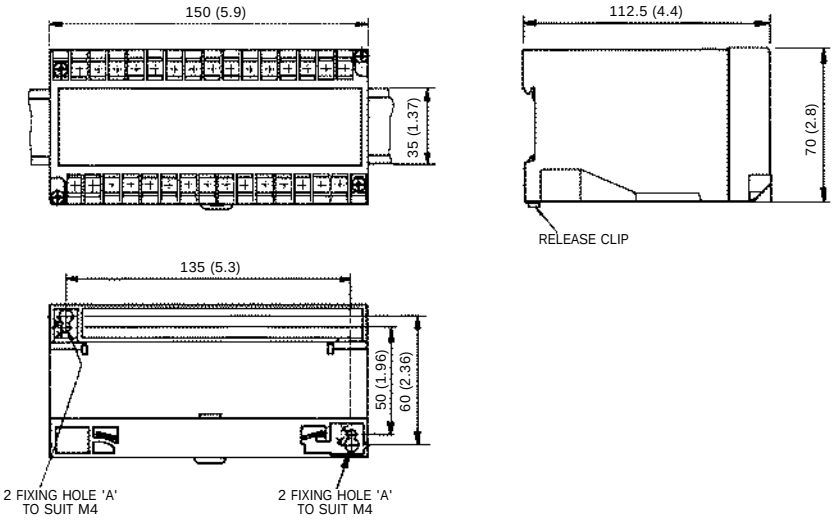

Crompton INSTRUMENTS

Protector Relays

Crompton Instruments

ANSI Switchboard Meters

TE connectivity ENERGY

Crompton Instruments
ANSI SWITCHBOARD METERS

An extensive range of analog and digital/analog meters in the 4½" ANSI case style. Meters utilize a robust pivot and jewel movement design, and provide 1% accuracy for all RMS AC and DC ranges. The range offers various customized options and features UL and CE Listings and Certifications.

Contents

Contents	Page
ANSI Switchboard Meters General Specs	2 – 3
AC | DC Ammeters, Voltmeters and Frequency Meters General Specs	4
RMS Reading AC Ammeters	5
RMS Reading AC Voltmeters	6
Expanded Scale AC Voltmeters	6
DC Ammeters	7
DC Voltmeters	8
Frequency Meters	8
AC Wattmeters & AC VArmeters General Specifications	9
AC Wattmeters | VArmeter Scale Selector Guide	10 - 11
AC Wattmeters	12
AC VArmeters	13
DC Transducer Indicators	13
Elapsed Time Meters	14
AC Phase Sequence | Phase Failure	14
DC Indicators for Tachometer Generators	14
AC Power Factor Meters	15
LED Digital | Analog Combination General Specifications	16
LED Digital | Analog AC Voltmeters	17
LED Digital | Analog AC Ammeters	18 - 19
LED Digital | Analog DC Voltmeters	20
LED Digital | Analog DC Ammeters	21
Switchboard Meter Options	22

Features
- Rugged polycarbonate
- Class 1 accuracy

Benefits
- Meets all requirements of ANSI C39.1
- Customize options and features
- Parallax error-free platform dials

Applications
- Switchgear
- Distribution Systems
- Generator Sets
- Control Panels
- Energy Management
- Building Management
- Utility Power Monitoring
- Process Control
- Motor Control

Certifications

ANSI Switchboard Meters

High quality range of switchboard instruments with Class 1 accuracy and which complies with American ANSI-C39.1 (1981) specifications. Available in 4 1/2" case size, the rugged design characteristics meet the needs of the most demanding environmental applications. This extensive range of analog and digital/analog meters utilizes high shock and provides 1% accuracy for all RMS AC and DC ranges. The range offers various customized options and features.

Description

Our Switchboard Meter series offers two case types; models 007 and 078.

Model 078 is high shock hermetically sealed and all models have heavy gauge pressed steel cases. Mounting is by four integral studs. Model 078 has a die-cast bezel and a projecting moulded toughened glass window, which incorporates a gas tight zero adjuster.

Model 007 is a one piece flame retardant polycarbonate moulding with a black matte finished bezel area, and a specially contoured window to minimize reflection from adjacent light sources.

Scales are 240° moving iron and 250° moving coil with parallax error-free platform dials. Standard dials are white matte with black printed scales and bar knife-edge pointers.

007 Power and 078

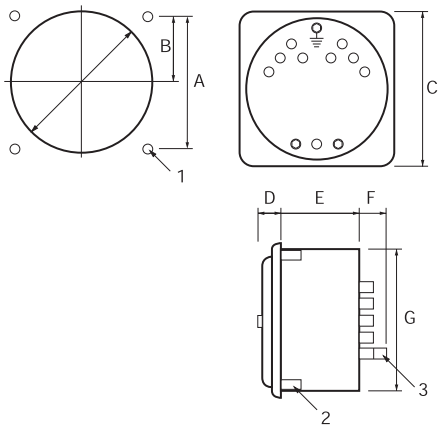

007 AMPs | Volts | Frequency Only

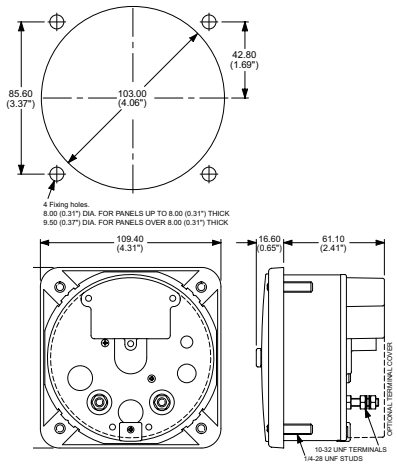

Specifications

Performance	ANSI C39.1 (1981)
Accuracy	Class 1
Terminals	10 - 32 UNF terminals
Response time	Approximately 2.5 seconds to full scale (007 and 078)
Dielectric voltage	Withstand test 2.3 kV for 1 minute
Standard calibration	23°C
Operating temperature	0°C to +60°C. Model 078: -40°C to +70°C
Storage temperature	-10°C to +50°C
Extreme temperature range	-20°C to +65°C
Enclosure integrity	Model 007 to IP54 (NEMA 3S) splash proof, IP55 (NEMA 4) hoseproof is an optional extra Model 078 to IP67 (NEMA 6 and 6P)
Fixing on panel	4 integral 1/4 -28 UNF fixing studs
Certifications	c-UL-us, CE

Dimensions (in inches)

Model	Panel Cutout			Rear View		Side View		
	Dia	A	B	C	D	E	F	G
007 (Amps, Volts & Freq.)	4.06	3.37	1.69	4.31	0.65	2.41	-	4.05
007 Others	4.06	3.37	1.69	4.31	0.65	-	0.91	4.05
078	4.06	3.37	1.69	4.31	0.63	-	0.91	4.05

Dimension E on OO7 others and 078 products varies with measured parameter. See product code on following page.

Dimension F on 078 (Amps, Volts & Freq.) products is included with dimension E.

1–4 Fixing holes Ø 8mm. 2–1/4-28 UNF fixing studs. 3–10-32 UNF terminals.

Features
- Rugged pivot and jewel movement
- Class 1 accuracy

Benefits
- Meets all the requirements of ANSI-C39.1 (1981)
- Parallax error-free platform dials
- Bump, shock and vibration proof
- Customized options and features

Applications
- Switchgear
- Distribution systems
- Generator sets
- Control panels
- Energy management
- Building management
- Utility power monitoring
- Process control
- Motor control

Certifications

Type of instrument	Ranges	Dimension E		Product code
		007	078	
AC rectified ammeter	1 - 30A	56	86	007/078-05B
AC rectified voltmeter	30 - 800V	56	86	007/078-05W
AC voltmeter expanded scale	110 - 130V	86	86	007/078-05Y
AC RMS ammeter	1 - 30A	56	86	007/078-05F
AC RMS voltmeter	150 - 750V	56	86	007/078-05G
Elapsed time meter (99999.99)	50 or 60Hz / 100 - 440V* and DC	56	56	007/078-155/156/077-151
Frequency meter	50, 60	86	86	007/078-41L
AC wattmeter or VArmeter	0.2 - 10A/100 - 440V*	132	132	007/078-21 or 31
LED synchroscope only	63.5 - 480V****	86	-	077-14A
LED synchroscope and synchro check relay	63.5 - 480V****	86	-	077-14 L/G/D/U
Phase sequence indicator	100 - 150, 151 - 300, 301 - 500V	56	-	077-12P
Transducer operated indicator	1, 5, 10, 20, or 4/20mA	56	56	007/078-05
DC ammeter moving coil	200QA - 30A 56	56	56	007/078-05A
DC voltmeter moving coil	50mV - 600V 56	56	56	007/078-05V
240° phase angle | power factor	1 or 5A, 100 - 400V, 50, 60	132	132	007/078-42
DIGI/Analog AC ammeter	1mA - 10A	86	-	007-DIB
DIGI/Analog AC voltmeter	200mV - 600V	86	-	007-DIW
DIGI/Analog DC ammeter	1mA - 1A	86	-	007-DIA
DIGI/Analog DC voltmeter	20mV - 600V	86	-	007-DIV
DIGI/Analog transducer indicator	DC mA	86	-	007-DIT
DIGI/Analog tachometer	AC or DC rated	86	-	007-DI2

* 100-440V = (100/125, 200/250, 380/440).
**100-440V = (100/125, 200/250, 380/440). Frequencies 45/55, 55/65, 45/65, 46/54, 50/70, 58/62, 56/64.
****Nominal voltage to be specified.

AC and DC Ammeters, Voltmeters and Frequency Meters

This range of self contained, pivot and jewel moving iron meters feature 250° linear scale. AC instruments are available with true RMS converting circuit or RMS compensated rectifier. While types of frequency meters can be damaged by transient supply voltage spike, Crompton Instruments 007-41 frequency meters can withstand, without damage, 10 successive transient spikes of 1250 volts. The range offers c-UL-us certification.

Fig. AA 007-05/007-41

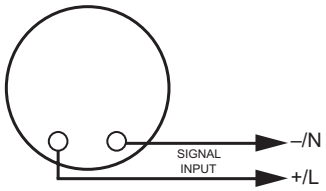

Specifications-General

Manufactured in accordance with American National Standards ANSI C39.1, (1981)

Accuracy	±1% full scale at 23°C (73°F)
Scales arc	250° full scale deflection
Scale length	007 and 078: 175.2 mm (6.9")
Scale plate	2 piece, platform type
Response time	007 and 078: Approximately 2.5 seconds to full scale
Operating temperature	0 to 40°C (32 to 104°F)
Storage temperature	-10 to +50°C (14 to 122°F)
Extreme temperature range	-20° to +65°C (-4° to 149°F)
Terminals	Standard 10-32 UNF stud. M5 screw clamp is optional
Dielectric withstand	2300V AC for 1 minute between electrical circuit and case
Overshoot	33% maximum
Enclosure code	007: IP54, optional IP55 and 078: IP67
Certification	c-UL-us

Specifications-Ammeters and Voltmeters

Overload rating	AC ammeters - 2 x continuous, 50 x for 1 second AC voltmeters and frequency meters - 1.2 x continuous DC ammeters - 2 x continuous 10 x for 1 second DC voltmeters - 1.2 x continuous
Frequency range	AC calibration 50/60Hz ±20%

Specifications-Frequency Meters

Response time	3 seconds maximum
External temperature influence	0.6 times accuracy maximum with ±10°C from reference temperature
External field influence	2.0 times accuracy maximum with 0.5m T field
Acceptable input harmonic influence	up to 30% distortion

Maximum Frequency - Hz	Center Scale - Hz	Error in Hz
45-55	50	0.15
46-54	50	0.15
45-65	55	0.25
50-70	60	0.25
55-65	60	0.15
56-64	60	0.15

RMS Reading AC Ammeters

Product Codes – Self Contained 40/70Hz - Accuracy ±1%, 60Hz***

Rating	Scaling*	4 1/2" square flange	
		Std. case catalog number	Std. case hi-shock catalog number
1A	0-1A	•007-05FA-LALA-C7	078-05FJ-LALA-C6
1.5A	0-1.5A	•007-05FA-LCLC-C7	078-05FJ-LCLC-C6
2A	0-2A	•007-05FA-LELE-C7	078-05FJ-LELE-C6
3A	0-3A	•007-05FA-LJLJ-C7	078-05FJ-LJLJ-C6
5A	0-5A	•007-05FA-LSLS-C7	078-05FJ-LSLS-C6
7.5A	0-7.5A	•007-05FA-MFMF-C7	078-05FJ-MFMF-C6
10A	0-10A	•007-05FA-MTMT-C7	078-05FJ-MTMT-C6
15A	0-15A	•007-05FA-NDND-C7	078-05FJ-NDND-C6
20A	0-20A	•007-05FA-NGNG-C7	078-05FJ-NGNG-C6
30A	0-30A	•007-05FA-NLNL-C7	078-05FJ-NLNL-C6

For AC rectified non-RMS compensated meter, please replace the -05F in the product code with -05B.

Product Codes – Transformer Rated 40/70Hz - Burden 0.3VA***

5A	0-10A	•007-05FA-LSMT-C7	078-05FJ-LSMT-C6
5A	0-15A	•007-05FA-LSND-C7	078-05FJ-LSND-C6
5A	0-20A	•007-05FA-LSNG-C7	078-05FJ-LSNG-C6
5A	0-25A	•007-05FA-LSNJ-C7	078-05FJ-LSNJ-C6
5A	0-30A	•007-05FA-LSNL-C7	078-05FJ-LSNL-C6
5A	0-40A	•007-05FA-LSNP-C7	078-05FJ-LSNP-C6
5A	0-50A	•007-05FA-LSNT-C7	078-05FJ-LSNT-C6
5A	0-75A	•007-05FA-LSPB-C7	078-05FJ-LSPB-C6
5A	0-100A	•007-05FA-LSPK-C7	078-05FJ-LSPK-C6
5A	0-150A	•007-05FA-LSPZ-C7	078-05FJ-LSPZ-C6
5A	0-200A	•007-05FA-LSRL-C7	078-05FJ-LSRL-C6
5A	0-250A	•007-05FA-LSRS-C7	078-05FJ-LSRS-C6
5A	0-300A	•007-05FA-LSRX-C7	078-05FJ-LSRX-C6
5A	0-400A	•007-05FA-LSSC-C7	078-05FJ-LSSC-C6
5A	0-500A	•007-05FA-LSSF-C7	078-05FJ-LSSF-C6
5A	0-600A	•007-05FA-LSSJ-C7	078-05FJ-LSSJ-C6
5A	0-800A	•007-05FA-LSSN-C7	078-05FJ-LSSN-C6
5A	0-1000A	•007-05FA-LSSS-C7	078-05FJ-LSSS-C6
5A	0-1200A	•007-05FA-LSSU-C7	078-05FJ-LSSU-C6
5A	0-1500A	•007-05FA-LSTC-C7	078-05FJ-LSTC-C6
5A	0-1600A	•007-05FA-LSTE-C7	078-05FJ-LSTE-C6
5A	0-2000A	•007-05FA-LSTM-C7	078-05FJ-LSTM-C6
5A	0-2500A	•007-05FA-LSTU-C7	078-05FJ-LSTU-C6
5A	0-3000A	•007-05FA-LSUA-C7	078-05FJ-LSUA-C6
5A	0-4000A	•007-05FA-LSUE-C7	078-05FJ-LSUE-C6
5A	0-5000A	•007-05FA-LSUJ-C7	078-05FJ-LSUJ-C6
5A	0-6000A	•007-05FA-LSUP-C7	078-05FJ-LSUP-C6
5A	0-7000A	•007-05FA-LSUS-C7	078-05FJ-LSUS-C6
5A	0-8000A	•007-05FA-LSUW-C7	078-05FJ-LSUW-C6

For AC rectified non-RMS compensated meter, please replace the -05F in the product code with -05B.

* Other scales are available.
*** For case types 007/078 use 10-32 UNF terminals.
• c-UL-us certified.

AC Ammeter

AC Voltmeter

RMS Reading AC Voltmeters

Product Codes – Self Contained 50/60Hz ± 20% - Accuracy ±1%***

Rating	Scaling*	4 1/2" square flange	
		Std. case catalog number	Std. case hi-shock catalog number
150V	0-150V	•007-05GA-PZPZ-C7	078-05GJ-PZPZ-C6
250V	0-250V	•007-05GA-RSRS-C7	078-05GJ-RSRS-C6
300V	0-300V	•007-05GA-RXRX-C7	078-05GJ-RXRX-C6
500V	0-500V	•007-05GA-SFSF-C7	078-05GJ-SFSF-C6
600V	0-600V	•007-05GA-SJSJ-C7	078-05GJ-SJSJ-C6
750V	0-750V	007-05GA-SMSM-C7	078-05GJ-SMSM-C6

For AC rectified non-RMS compensated meter, please replace the -05G in the product code with -05W.

Product Codes – Transformer Rated 50/60Hz - Accuracy 31% 0.8VA @ 150V***

150V	0-300V	•007-05GA-PZRX-C7	078-05GJ-PZRX-C6
150V	0-600V	•007-05GA-PZSJ-C7	078-05GJ-PZSJ-C6
150V	0-750V	•007-05GA-PZSM-C7	078-05GJ-PZSM-C6
150V	0-3000V	•007-05GA-PZUA-C7	078-05GJ-PZUA-C6
150V	0-5250V	•007-05GA-PZUL-C7	078-05GJ-PZUL-C6
150V	0-6000V	•007-05GA-PZUP-C7	078-05GJ-PZUP-C6
150V	0-9000V	•007-05GA-PZUY-C7	078-05GJ-PZUY-C6
150V	0-15kV	•007-05GA-PZWC-C7	078-05GJ-PZWC-C6
150V	0-18kV	•007-05GA-PZWD-C7	078-05GJ-PZWD-C6
150V	0-45kV	•007-05GA-PZWJ-C7	078-05GJ-PZWJ-C6
250V	0-600V	•007-05GA-RSSJ-C7	078-05GJ-RSSJ-C6

For AC rectified non-RMS compensated meter, please replace the -05G in the product code with -05W.

Product Codes – Expanded Scale - Moving Coil Zener Diode *** Accuracy ±0.3% of Mid-scale Value Self Contained, 20-1000Hz

110-130V	110-130V	007-05YA-PNPN-C6	078-05YJ-PNPN-C6
110-130V	To suit PT	007-05YA-PN**-C6	078-05YJ-PN**-C6

* Other scales are available.
** Scaling information provided at time of order.
*** For case types 007/078 use 10-32 UNF terminals.
• c-UL-us listed.

AC Voltmeter - Expanded Scale

DC Ammeters

Product Codes – Self Contained - Accuracy ±1%***

Rating	Scaling*	4 1/2" square flange	
		Std. case catalog number	Std. case hi-shock catalog number
0-200QA	0-200QA	•007-05AA-EAEA	078-05AJ-EAEA
0-300QA	0-300QA	•007-05AA-EEEE	078-05AJ-EEEE
0-500QA	0-500QA	•007-05AA-EMEM	078-05AJ-EMEM
0-800QA	0-800QA	•007-05AA-EWEW	078-05AJ-EWEW
0-1mA	0-1mA	•007-05AA-FAFA	078-05AJ-FAFA
0-2mA	0-2mA	•007-05AA-FGFG	078-05AJ-FGFG
0-5mA	0-5mA	•007-05AA-FXFX	078-05AJ-FXFX
0-10mA	0-10mA	•007-05AA-HAHA	078-05AJ-HAHA
0-20mA	0-20mA	•007-05AA-HFHF	078-05AJ-HFHF
0-30mA	0-30mA	•007-05AA-HMHM	078-05AJ-HMHM
0-50mA	0-50mA	•007-05AA-HXHY	078-05AJ-HXHY
0-100mA	0-100mA	•007-05AA-JRJR	078-05AJ-JRJR
0-200mA	0-200mA	•007-05AA-KAKA	078-05AJ-KAKA
0-300mA	0-300mA	•007-05AA-KGKG	078-05AJ-KGKG
0-500mA	0-500mA	•007-05AA-KMKM	078-05AJ-KMKM
0-800mA	0-800mA	•007-05AA-KWKW	078-05AJ-KWKW
0-1A	0-1A	•007-05AA-LALA	078-05AJ-LALA
0-5A	0-5A	•007-05AA-LSLS	078-05AJ-LSLS
0-10A	0-10A	•007-05AA-MTMT	078-05AJ-MTMT
0-15A	0-15A	•007-05AA-NDND	078-05AJ-NDND
0-20A	0-20A	•007-05AA-NGNG	078-05AJ-NGNG
0-30A	0-30A	•007-05AA-NLNL	078-05AJ-NLNL

Product Codes – Millimeters - Suppressed Zero, No Zero Adjust Unless Specified

1/5mA	To Suit	•007-05RA-GM**	078-05RJ-GM**
4/20mA	To Suit	•007-05RA-HG**	078-05RJ-HG**
10/50mA	To Suit	•007-05RA-HZ**	078-05RJ-HZ**

Product Codes – Shunt Rated - Accuracy ±1%***

Rating	Scaling*	4 1/2" square flange	
		Std. case catalog number	Std. case hi-shock catalog number
50mV	To suit shunt rating	•007-05AA-EY**	078-05AJ-EY**
50-0-50mV		•007-05CA-GB**	078-05CJ-GB**
100mV		•007-05AA-GB**	078-05AJ-GB**
100-0-100mV		•007-05CA-GM**	078-05CJ-GM**

Product Codes – Zero Left For Use With 50 mV Shunts and 0.05 Ohm Shunt Leads***and ****

50mV	0-15A	•007-05AA-EYND	078-05AJ-EYND
50mV	0-20A	•007-05AA-EYNG	078-05AJ-EYNG
50mV	0-30A	•007-05AA-EYNL	078-05AJ-EYNL
50mV	0-40A	•007-05AA-EYNP	078-05AJ-EYNP
50mV	0-75A	•007-05AA-EYPB	078-05AJ-EYPB
50mV	0-100A	•007-05AA-EYPK	078-05AJ-EYPK
50mV	0-150A	•007-05AA-EYPZ	078-05AJ-EYPZ
50mV	0-200A	•007-05AA-EYRL	078-05AJ-EYRL
50mV	0-300A	•007-05AA-EYRX	078-05AJ-EYRX
50mV	0-400A	•007-05AA-EYSC	078-05AJ-EYSC
50mV	0-500A	•007-05AA-EYSF	078-05AJ-EYSF
50mV	0-750A	•007-05AA-EYSM	078-05AJ-EYSM
50mV	0-1000A	•007-05AA-EYSS	078-05AJ-EYSS
50mV	0-1200A	•007-05AA-EYSU	078-05AJ-EYSU
50mV	0-1500A	•007-05AA-EYTC	078-05AJ-EYTC
50mV	0-2000A	•007-05AA-EYTM	078-05AJ-EYTM
50mV	0-3000A	•007-05AA-EYUA	078-05AJ-EYUA

DC Ammeter

- c-UL-us certified.
  Specify shunt lead resistance value if in excess of 0.05 ohms for calibration purposes.
  DC shunt rated ammeters have thermistor circuit ambient temperature compensation.
  Separate shunt and shunt leads are not included.

* Other scales are available.

** Specify scale required.

*** Other mV ratings and scale options available upon request.

**** For case types 007/078 use 10-32 UNF terminals.

DC Voltmeter

DC Voltmeters

Product Codes – Sensitivity 1000 Ohms / Volt - Accuracy ±1%***

Rating	Scaling*	4 1/2" square flange	
		Std. case catalog number	Std. case hi-shock catalog number
500MV-800V	To suit	•007-05VA-**	078-05VJ-**
0-15V	0-15V	•007-05VA-NDND	078-05VJ-NDND
0-30V	0-30V	•007-05VA-NLNL	078-05VJ-NLNL
0-50V	0-50V	•007-05VA-NTNT	078-05VJ-NTNT
0-75V	0-75V	•007-05VA-PBPB	078-05VJ-PBPB
0-150V	0-150V	•007-05VA-PZPZ	078-05VJ-PZPZ
0-300V	0-300V	•007-05VA-RXRX	078-05VJ-RXRX
0-400V	0-400V	•007-05VA-SCSC	078-05VJ-SCSC
0-500V	0-500V	•007-05VA-SFSF	078-05VJ-SFSF
0-600V	0-600V	•007-05VA-SJSJ	078-05VJ-SJSJ
0-750V	0-750V	007-05VA-SMSM	078-05VJ-SMSM
0-800V	0-800V	007-05VA-SNSN	078-05VJ-SNSN

Product Codes – Zero Center - Sensitivity 2000 Ohms / Volt Accuracy ±1%***

150-0-150V	150-0-150V	•007-05NA-RXRX	078-05NJ-RXRX
300-0-300V	300-0-300V	•007-05NA-SJSJ	078-05NJ-SJSJ
500-0-500V	500-0-500V	•007-05NA-SSSS	078-05NJ-SSSS
600-0-600V	600-0-600V	•007-05NA-SUSU	078-05NJ-SUSU

Frequency Meter

Frequency Meters

Product Codes – 120V Self Contained***

Ratings	Scaling*	4 1/2" square flange	
		Std. case catalog number	Std. case hi-shock catalog number
50Hz +/-0.15	45-55Hz	•007-41LA-PNAG-AG	078-41LJ-PNAG-AG
50Hz +/-0.15	46-54Hz	•007-41LA-PNAH-AH	078-41LJ-PNAH-AH
50Hz +/-0.25	45-65Hz	•007-41LA-PNAJ-AJ	078-41LJ-PNAJ-AJ
60Hz +/-0.25	50-70Hz	•007-41LA-PNAL-AL	078-41LJ-PNAL-AL
60Hz +/-0.15	55-65Hz	•007-41LA-PNAN-AN	078-41LJ-PNAN-AN
60Hz +/-0.15	56-64Hz	•007-41LA-PNAO-AO	078-41LJ-PNAO-AO
60Hz+/-0.08	58-62Hz	•007-41LA-PNAT-AT	078-41LJ-PNAT-AT

For alternative voltage rating 200-250V, use code RN instead of PN.
For alternative voltage rating 380-480V, case types 007/078 use code SE instead of PN.

10-32 UNF terminals.
* Other scales are available.
** Specify scale required.
***For case types 007/078 use 10-32 UNF terminals.
• c-UL-us certified.

AC Wattmeters and VArmeters

The Crompton Instruments Switchboard series of AC Wattmeters and VArmeters incorporate a DC moving coil, pivot and jewel indicator with a micro-circuit watt transducer PCB to read power on single or three-phase systems. The most frequently selected wattmeter scale marking for common current and voltage transformers are listed on the following pages. In addition, these instruments may be supplied with zero-left or center-zero scale.

Scaling

Wattmeter and VArmeter current circuits should have equal carrying capacity because they are frequently connected in series. This means that the sum of the left and right end-scale values of the VArmeters should be equal to or greater than the full scale value of the Wattmeter (or have higher end-scale values if the instruments are center or offset-zero). Instruments measuring 10,000 kilowatts and over are marked in megawatts. Center-zero or offset-zero Watt and VArmeters are marked “IN” for left deflection and “OUT” for right deflection. On ordering, Wattmeter and VArmeter scales will be calculate, the nearest preferred scale will be offered from the charts on the following pages. Custom scales are available but at an extra cost.

Calibration

For full load value of Watts or VAr, assuming unity power factor:

1-phase 2-wire Watts = amps x volts

3-phase 3-wire Watts = amps x line-to-line volts x √3

3-phase 4-wire Watts = amps x line-to-neutral volts x 3

Minimum scale values are obtained by multiplying resultant Watts, using the above formula x 0.7 and selecting next higher standard scale.

For maximum scale value, multiply x 1.3 and select the next lowest standard.

If scale calculates to an exact listed value, use this value rather than the next higher or lower value.

Note: When ordering Wattmeters and VArmeters, please specify CT ratio, VT ratio and required scale.

Specifications

Burden per element	Current circuit: 2VA | Voltage Circuit: 1VA
Accuracy	Class 1.0
Ambient range	0° to ± 60° (32° to 104°F) std. calibration 20°C (68°F)
Ambient influence	0.05% per 1°C maximum
Overloads-current	10 x rating for 5 seconds, 1.2 x continuously
Voltage influence	2 x rating for 5 seconds, 1.2 x continuously voltage
	Accuracy maintained, 80 - 110% rated voltage
Power factor influence	Accuracy maintained, 0.1 lag to 0.1 lead
Enclosure code	007 IP54 optional IP55 | 078 IP67
Response time	007 and 078 approximately 2.5 seconds
Dielectric withstand	Live parts to case including panel 2600V RMS for 1 minute

Wattmeter | VArmeter Scale Selector Guide

Primary potential transformer voltage system		120 (1:1)	208 (1.73:1)	240 (2:1)	480 (4:1)	600 (5:1)	2400 (20:1)	3600 (30:1)	4200 (35:1)	4800 (40:1)	6000 (50:1)	7200 (60:1)	8400 (70:1)
3-phase 3-wire (L-L) system voltage		120	208	240	480	600	2400	3600	4200	4800	6000	7200	8400
3-phase 4-wire (L-N) current transformer		69	120	139	277	347	1390	2100	2400	2770	3500	4160	4800
RATIO	Normal	5KW	10KW	10KW	20KW	25KW	100KW	150KW	175KW	200KW	250KW	300KW	350KW
25/5	Max.	6	10	12	25	30	120	200	200	250	300	400	450
(5:1)	Min.	3	5	6	12.5	15	60	100	100	125	150	200	225
RATIO	Normal	10KW	20KW	20KW	40KW	50KW	200KW	300KW	350KW	400KW	500KW	600KW	700KW
50/5	Max.	12	20	25	50	60	250	400	450	500	600	800	900
(10:1)	Min.	6	10	12.5	25	30	125	200	250	250	300	400	450
RATIO	Normal	15KW	25KW	30KW	60KW	75KW	300KW	500KW	500KW	600KW	750KW	900KW	1000KW
75/5	Max.	20	30	40	80	100	400	600	700	800	1000	1200	1200
(15:1)	Min.	10	15	20	40	50	200	300	350	400	500	600	600
RATIO	Normal	20KW	30KW	40KW	75KW	100KW	400KW	600KW	700KW	800KW	1000KW	1200KW	1200KW
100/5	Max.	25	40	50	100	120	500	800	900	1000	1200	1500	1500
(20:1)	Min.	12.5	20	25	50	60	250	400	450	500	600	750	750
RATIO	Normal	30KW	50KW	50KW	100KW	150KW	600KW	800KW	1000KW	1200KW	1500KW	1800KW	2000KW
150/5	Max.	40	70	75	150	200	800	1200	1200	1500	2000	2400	2500
(30:1)	Min.	20	35	35	75	100	400	600	600	750	1000	1000	1250
RATIO	Normal	40KW	75KW	75KW	150KW	200KW	800KW	1200KW	1200KW	1500KW	2000KW	2500KW	3000KW
200/5	Max.	50	80	100	200	250	1000	1500	1500	2000	2500	3000	3500
(40:1)	Min.	25	40	50	100	125	500	750	750	1000	1250	1500	1500
RATIO	Normal	70KW	100KW	100KW	200KW	300KW	1200KW	1500KW	2000KW	2500KW	3000KW	3500KW	4500KW
300/5	Max.	75	120	150	300	400	1500	2000	2500	3000	4000	4000	5000
(60:1)	Min.	35	60	75	150	200	750	1000	1250	1500	2000	2000	2500
RATIO	Normal	75KW	125KW	150KW	300KW	400KW	1500KW	2500KW	3000KW	3000KW	4000KW	5000KW	6000KW
400/5	Max.	100	150	200	400	500	2000	3000	3600	4000	5000	6000	7000
(80:1)	Min.	50	75	100	200	250	1000	1500	1500	2000	2500	3000	3500
RATIO	Normal	125KW	200KW	200KW	450KW	600KW	2000KW	3000KW	4000KW	5000KW	6000KW	7500KW	8000KW
600/5	Max.	150	250	300	600	800	3000	4000	5000	6000	8000	8000	10MW
(120:1)	Min.	75	125	150	300	400	1500	2000	2500	3000	4000	4000	5000KW
RATIO	Normal	150KW	250KW	300KW	600KW	800KW	3000KW	5000KW	6000KW	6000KW	8000KW	10MW	12MW
800/5	Max.	200	350	400	800	1000	4000	6000	7500	8000	10MW	12	15
(160:1)	Min.	100	175	200	400	500	2000	3000	3000	40000	5000KW	6000KW	7500KW
RATIO	Normal	200KW	350KW	400KW	800KW	1000KW	4000KW	6000KW	6000KW	8000KW	10MW	12MW	15MW
1000/5	Max.	250	450	500	1000	1200	5000	8000	8000	10MW	12	15	18
(200:1)	Min.	125	225	250	500	600	2500	4000	4000	5000KW	6000KW	7500KW	10
RATIO	Normal	250KW	400KW	500KW	1000KW	1200KW	5000KW	7000KW	8000KW	10MW	12MW	15MW	10MW
1200/5	Max.	300	500	600	1200	1500	6000	8000	10MW	12	15	18	20
(240:1)	Min.	150	250	300	600	750	3000	4000	5000KW	6000KW	7500KW	10	10
RATIO	Max.	300KW	500KW	600KW	1200KW	1500KW	6000KW	10MW	10MW	12MW	15MW	20MW	20MW
1500/5	Max.	400	700	750	1500	2000	8000	12	12	15	20	20	25
(300:1)	Min.	200	350	375	1000	1000	4000	6000KW	6000KW	7500KW	10	10	12.5
RATIO	Normal	400KW	750KW	800KW	1600KW	2000KW	8000KW	12MW	12MW	15MW	20MW	25MW	30MW
2000/5	Max.	500	800	1000	2000	2500	10MW	15	15	20	25	30	35
(400:1)	Min.	250	400	500	750	1250	5000	7500KW	7500KW	10	12.5	15	20
RATIO	Normal	750KW	1000KW	1200KW	2000KW	3000KW	12MW	18MW	20MW	25MW	30MW	35MW	40MW
3000/5	Max.	800	1200	1500	3000	4000	15	20	25	30	40	40	50
(600:1)	Min.	400	600	750	1500	2000	7500KW	10	12.5	15	20	20	25
RATIO	Normal	800KW	1200KW	1500KW	3000KW	4000KW	15MW	20MW	25MW	30MW	40MW	50MW	50MW
4000/5	Max.	1000	1500	2000	4000	5000	20	30	30	40	50	60	75
(800:1)	Min.	500	750	1000	2000	2500	10	15	15	20	25	30	40
RATIO	Normal	1000KW	1500KW	2000KW	4000KW	5000KW	20MW	30MW	20MW	40MW	50MW	60MW	75MW
5000/5	Max.	1250	2000	2500	5000	6000	25	40	25	50	60	80	80
(1000:1)	Min.	500	1000	1250	2500	3000	12.5	20	12.5	25	30	40	40
RATIO	Normal	1200KW	2000KW	2500KW	5000KW	6000KW	25MW	35MW	40MW	50MW	60MW	60MW	80MW
6000/5	Max.	1500	2500	3000	3000	8000	30	40	50	60	80	80	100
(1200:1)	Min.	750	1250	1500	1500	4000	15	20	25	30	40	40	50

Wattmeter | VArmeter Scale Selector Guide

Primary potential transformer voltage system		12kV (100:1)	14.4kV (120:1)	24kV (200:1)	34.5kV (300:1)	38kV (330:1)	46kV (400:1)	92kV (800:1)	115kV (1000:1)	138kV (1200:1)	345kV (3000:1)	765kV (6000:1)
3-phase 3-wire (L-L) system voltage		12KV	14.4kV	24kV	34.5kV	38kV	46kV	92kV	115kV	138kV	345kV	765kV
3-phase 4-wire (L-N) current transformer		6900	8300	13.8KV	20kV	22kV	26.5kV	53kV	66kV	80kV	200kV	440kV
RATIO	Normal	500KW	600KW	1000KW	1500KW	1500KW	1500KW	3000KW	5000KW	6000KW	15MW	30MW
25/5	Max.	650	800	1200	1500	2000	2500	200	200	250	300	400
(5:1)	Min.	325	400	600	750	1000	1250	100	100	125	150	200
RATIO	Normal	1000KW	1200KW	2000KW	3000KW	3000KW	3500KW	8000KW	10MW	12MW	30MW	60MW
50/5	Max.	1200	1500	2500	3500	4000	5000	10MW	12	15	35	80
(10:1)	Min.	600	750	1250	1750	2000	2500	5000KW	6000KW	7500KW	15	40
RATIO	Normal	1500KW	1800KW	3000KW	4000KW	5000KW	5000KW	10MW	15MW	15MW	45MW	100MW
75/5	Max	2000	2000	4000	5000	6000	7500	15	15	20	50	125
(15:1)	Min.	1000	1000	2000	2500	3000	3000	7500KW	7500KW	10	25	50
RATIO	Normal	2000KW	2500KW	4000KW	6000KW	6000KW	7500KW	15MW	20MW	25MW	60MW	125MW
100/5	Max.	2500	3000	5000	7500	8000	10MW	20	25	30	70	150
(20:1)	Min.	1250	1500	2500	3000	4000	5000KW	10	12.5	15	35	75
RATIO	Normal	3000KW	3500KW	6000KW	10MW	10MW	10MW	20MW	30MW	35MW	90MW	200MW
150/5	Max.	4000	4000	4000	10	12	15	30	35	40	100	250
(30:1)	Min.	2000	2000	2000	5000KW	6000KW	7500KW	15	15	20	50	100
RATIO	Normal	4000KW	4500KW	8000KW	12MW	12MW	15MW	30MW	35MW	50MW	100MW	250MW
200/5	Max.	5000	6000	5000	15	15	20	40	50	60	150	300
(40:1)	Min.	2500	3000	2500	7500KW	7500KW	10	20	25	30	75	150
RATIO	Normal	6000KW	7000KW	12MW	18MW	18MW	20MW	45MW	60MW	75MW	150MW	400MW
300/5	Max.	8000	8000	15	20	25	30	60	75	80	200	500
(60:1)	Min.	4000	4000	7.5	10	12.5	15	30	30	40	100	250
RATIO	Normal	8000KW	10MW	15MW	24MW	25MW	30MW	60MW	80MW	100MW	200MW	500MW
400/5	Max.	10MW	12	20	30	30	40	80	100	120	300	600
(80:1)	Min.	5000KW	6000KW	10	15	15	20	40	50	60	150	300
RATIO	Normal	12MW	15MW	25MW	35MW	40MW	45MW	90MW	100MW	150MW	350MW	800KW
600/5	Max.	15	18	30	40	50	60	120	150	180	450	1000
(120:1)	Min.	7500KW	10	15	20	25	30	60	75	75	225	500
RATIO	Normal	15MW	20MW	30MW	50MW	50MW	60MW	120MW	150MW	200MW	500MW	1000MW
800/5	Max.	20	25	40	60	60	80	150	200	200	600	1200
(160:1)	Min.	10	12.5	20	30	30	40	75	100	100	300	600
RATIO	Normal	20MW	25MW	40MW	50MW	60MW	75MW	150MW	200MW	250MW	600MW	1200MW
1000/5	Max.	25	30	50	60	80	100	200	250	300	750	1500
(200:1)	Min.	12.5	15	25	30	40	50	100	125	150	300	750
RATIO	Normal	25MW	30MW	50MW	60MW	80MW	100MW	175MW	250MW	300MW	750MW	1500MW
1200/5	Max.	30	35	60	80	100	120	200	300	350	900	2000
(240:1)	Min.	15	20	30	40	50	60	100	150	175	450	1000
RATIO	Normal	30MW	35MW	60MW	75MW	100MW	120MW	250MW	3000MW	350MW	900MW	2000MW
1500/5	Max.	40	40	80	100	120	150	300	350	450	1000	2500
(300:1)	Min.	20	20	40	50	60	75	150	175	225	500	1250
RATIO	Normal	40MW	50MW	80MW	100MW	120MW	150MW	300MW	400MW	5000MW	1000MW	2500MW
2000/5	Max.	50	60	100	150	150	200	400	500	600	1500	3000
(400:1)	Min.	25	30	50	75	75	100	200	250	300	750	1500
RATIO	Normal	60MW	75MW	100MW	150MW	200MW	200MW	400MW	600MW	700MW	1500MW	3500MW
3000/5	Max.	80	80	150	200	250	300	500	750	900	2000	5000
(600:1)	Min.	40	40	75	100	125	150	250	350	450	1000	2500
RATIO	Normal	80MW	100MW	150MW	200MW	250MW	300MW	5000MW	800MW	1000MW	2000MW	500MW
4000/5	Max.	100	125	200	300	300	400	800	1000	1200	3000	6000
(800:1)	Min.	50	60	100	150	150	200	400	500	600	1500	3000
RATIO	Normal	100MW	125MW	200MW	250MW	300MW	4000MW	750MW	1000MW	1200MW	3000MW	6000MW
5000/5	Max.	120	150	250	300	400	500	1000	1200	1500	3500	8000
(1000:1)	Min.	60	75	125	150	200	250	500	600	750	1750	400
RATIO	Normal	120MW	150MW	250MW	350KW	400MW	450MW	1000MW	1200MW	1500MW	3500MW	8000MW
6000/5	Max.	150	175	300	400	500	600	1200	1500	1750	4000	10000
(1200:1)	Min.	75	80	150	200	250	300	600	750	800	2000	5000

AC Wattmeter

AC Wattmeters

Product Codes – 1-Element, Transformer Rated, 50/60Hz Integral Transducer - Accuracy 1.0%, 50/60Hz

Measured System				Scaling	4 1/2" square flange	
Phases	Wires	Amperes 1VA max. burden	Volts 1 VA max. burden		Std. case catalog number	Std. case hi-shock catalog number
1	2	5	120V	To suit	•007-215A-QQ**-C7	078-215J-QQ**-C6
1	2	5	240V	To suit	007-215A-QS**-C7	078-215J-QS**-C6

For connection diagram refer to Figure A1 & A2.

Product Codes - 2 -Element, Transformer Rated, 50/60Hz Taut Band Integral Transducer - Accuracy 1.0%, 50/60Hz

3	3	5	120V	To suit	•007-218A-QQ**-C7	078-218J-QQ**-C6
3	3	5	208V	To suit	•007-218A-QR**-C7	078-218J-QR**-C6
3	3	5	240V	To suit	•007-218A-QS**-C7	078-218J-QS**-C6
3	3	5	380V	To suit	•007-218A-QX**-C7	078-218J-QX**-C6
3	3	5	480V	To suit	•007-218A-QT-**-C7	078-218J-QT**-C6

For connection diagram refer to Figure B1 & B2.

Product Codes - 2 1/2 - Element, Transformer Rated, 50/60Hz Taut Band Integral Transducer - Accuracy 1.0%, 50/60Hz

3	4	5	69V	To suit	•007-219A-QL-C7**	078-219J-QL**-C6
3	4	5	120V	To suit	•007-219A-QQ-C7**	078-219J-QQ**-C6
3	4	5	277V	To suit	•007-219A-QY-C7**	078-219J-QY**-C6
3	4	5	346V	To suit	•007-219A-QZ-C7**	078-219J-QZ**-C6

For connection diagram refer to Figure C1 & C2.

Fig. A1 Models 007-215 Wattmeter Single Phase

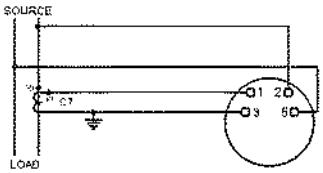

Fig. A2 Models 078-215 Wattmeter Single Phase

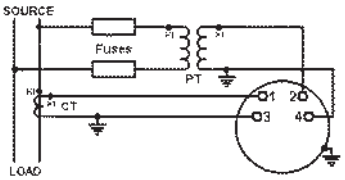

Fig. B1 Models 007-218 Wattmeter 3-Phase, 3-Wire Unbalanced Load

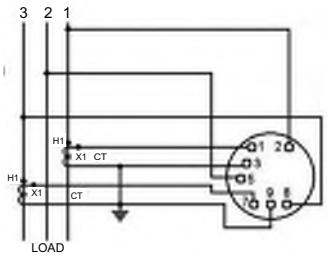

Fig. B2 Models 078-218 Wattmeter 3-Phase 3-Wire Unbalanced Load

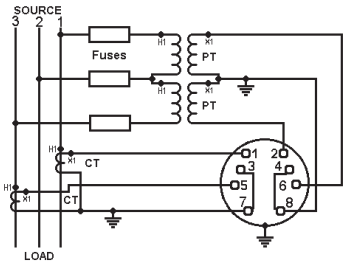

Fig. C1 Models 007-219 Wattmeter 3-Phase 4-Wire Unbalanced Load

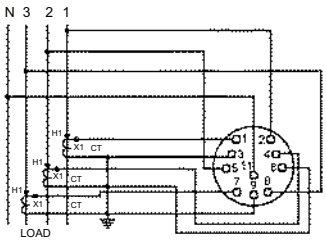

Fig. C2 Models 078-219 Wattmeter 3-Phase 4-Wire Unbalanced Load

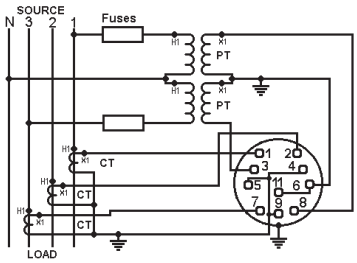

* Other scales are available.
** Specify CT (Current Transformer) and VT (Voltage Transformer) ratios if used and preferred scale at time of ordering.
• c-UL-us certified.

AC VArmeters

Product Codes - Element, Transformer Rated, 50/60Hz
Integral Transducer - Accuracy 1.0%, 50/60Hz

Measured System				Scaling	4 1/2" square flange	
Phases	Wires	Amperes 1VA max. burden	Volts 1 VA max. burden		Std. case catalog number	Std. case hi-shock catalog number
3	3	5	120V	To suit	•007-31LA-QQ**-C7	078-31LJ-QQ**-C6
3	3	5	208V	To suit	•007-31LA-QR**-C7	078-31LJ-QR**-C6
3	3	5	240V	To suit	•007-31LA-QS**-C7	078-31LJ-QS**-C6
3	3	5	380V	To suit	•007-31LA-QX**-C7	078-31LJ-QX**-C6
3	3	5	480V	To suit	•007-31LA-QT**-C7	078-31LJ-QT**-C6

For connection diagram refer to Figure D1 & D2.

Product Codes - 2 1/2-Element, Transformer Rated, 50/60Hz
Taut Band Integral Transducer - Accuracy 1.0%, 50/60Hz

3	4	5	120V	To suit	•007-31UA-QQ**-C7	078-31UJ-QQ**-C6
3	4	5	208V	To suit	•007-31UA-QR**-C7	078-31UJ-QR**-C6
3	4	5	480V	To suit	•007-31UA-QT**-C7	078-31UJ-QT**-C6

For connection diagram refer to Figure D1 & D2.

* Other scales are available.
** Specify CT (Current Transformer) and VT (VoltageTransformer) ratios if used and preferred scale at time of ordering.
• c-UL-us certified.

AC VArmeter

Fig. D1 Models 007-31L VArmeter 3-Phase 3-Wire Unbalanced Load

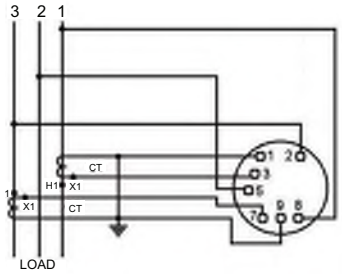

Fig. D2 Models 078-31L VArmeter 3-Phase 3-Wire Unbalanced Load

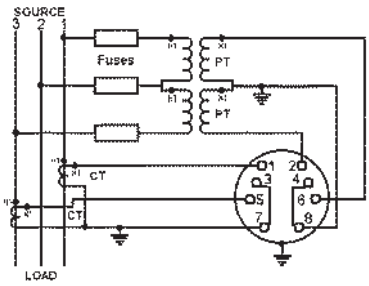

DC Transducer Indicators

Product Codes

Rating	Scaling*	4 1/2" square flange	
		Std. case catalog number	Std. case hi-shock catalog number
Watts 1mA	To suit	•007-055A-FA**	078-055J-FA**
VArs 1mA	To suit	•007-056A-FA**	078-056J-FA**
Frequency 1mA	To suit	•007-053A-FA**	078-053J-FA**
Power factor 1mA	To suit	•007-054A-FA**	078-054J-FA**
AC amps 1mA	To suit	•007-05AA-FA**	078-05AJ-FA**
AC volts 1mA	To suit	•007-05VA-FA**	078-05VJ-FA**
Speed 1mA	To suit	•007-052A-FA**	078-052J-FA**
VA 1mA	To suit	•007-057A-FA**	078-057J-FA**

*Case types 007/078 use 10-32 UNF terminals.
**Specify scale. Input: 1mA DC for 4/20mA change "FA" to "HG".
• c-UL-us certified.

For use with the following transducers: Watts, Vars, Frequency, Power Factor, AC amperes, AC volts and temperature.

DC Transducer Indicator

Elapsed Time Meter

Elapsed Time Meters

Product Codes – 99,999.99 Hours, Non Reset, Burden 2.5VA 50 or 60Hz

Synchronous motor running time meter with a non-resettable indicator.

Rating	4 1/2" square flange	
	Std. case catalog number	Std. case hi-shock catalog number
110/130V 50Hz	•007-155A-PNZH-C5	078-155J-PNZH-C5
200/250V 50Hz	•007-155A-RNZH-C5	078-155J-RNZH-C5
480V 50Hz	•007-155A-SEZH-C5	078-155J-SEZH-C5
110/130V 60Hz	•007-156A-PNZH-C6	078-156J-PNZH-C6
200/250V 60Hz	•007-156A-RNZH-C6	078-156J-RNZH-C6
480V 60Hz	•007-156A-SEZH-C6	078-156J-SEZH-C6
12/24/40/110V DC	007-151A-**-ZH-DC	Not Available

AC Phase Sequence and Phase Failure Indicator

AC Phase Sequence, Phase Failure Indicators

Product Codes – Neon Bulb Type, Burnden 2.5VA

Two neon bulbs for phase sequence indication - first marked the caption "correct 1-2-3", the second marked "incorrect 3-2-1". Three neon bulbs for phase failure indication - first marked 1, second marked 2, third marked 3.

Rating	4 1/2" square flange	
	Std. case catalog number	Std. case hi-shock catalog number
100/150V 50/60Hz	077-12PA-P2C6	Not available
151/300V 50/60Hz	077-12PA-P3C6	Not available
301/500V 50/60Hz	077-12PA-P4C6	Not available

For connection diagram refer to Figure E.

Fig. E Model 007-12P
Phase Sequence Indicator
3-Phase 3- or 4-Wire systems

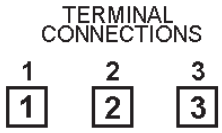

DC Indicators for Tachometer Generators

Product Code

Rating	4 1/2" square flange	
	Std. case catalog number	Std. case hi-shock catalog number
DC Volts	007-052A-**	078-052J-***

Select nearest higher rated voltmeter and specify requirement.

* Other ranges are available.
upon request Consult with the factory.

** RI for 10 ohm or R2 for 100 ohm platinum.

*** Specify input and scale.

• c-UL-us certified.

AC Power Factor Meter

Fig. E Models 007-425, 078-425J
Electronic Phase Angle Meter
Single Phase

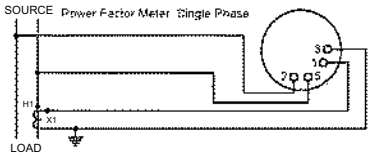

Fig. F Models 007-427, 078-427J
Electronic Phase Angle Meter
3-phase, 3- or 4-wire Balanced Load

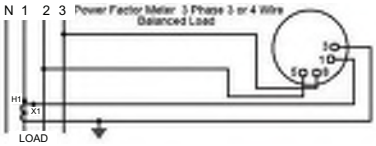

AC Power Factor Meter

Specifications

Ratings, self-contained	Current windings 5A. Voltage windings minimum 50V, maximum 600V
Accuracy	Balanced load: Class 1
Overshoot	33%
External temperature influence	0.5% fid minimum
External field influence	0.5% fid maximum
Frequency range	50Hz or 60Hz standard, 25-3000Hz optional (Specify)
Frequency influence	Single phase instruments, 59 to 61Hz 1.0% fid maximum polyphase instruments ±10% deviation from 69Hz: 1.0%
Overload capacity: 25% indefinitely	Current coils 1000% momentarily, 100% for 15 minutes Voltage circuits 25% indefinitely
Burdens	Each current circuit, 1.5VA approximately Each voltage circuit 1VA approximately Measuring systems 077-427-3 or 4-wire
Ranges available	Lag 0.5-1 - 0.5 lead power factor Lag 0.2-1 - 0.8 lead power factor

Product Codes - Balanced Load - Accuracy ±1%

Measured System				Scaling	4 1/2" square flange	
Phases	Wires	Amperes 2VA max. burden	Volts 1 VA max. burden		Std. case catalog no.	Std. case hi-shock catalog no.
1	2	5	120V	0.5-1-0.5	•007-425A-QQAD-C6	078-425J-QQAD-C6
1	2	5	240V	0.5-1-0.5	•007-425A-QSAD-C6	078-427J-QSAD-C6
3	3/4	5	120V	0.5-1-0.5	•007-427A-QQAD-C6	078-427J-QQAD-C6
3	3/4	5	208V	0.5-1-0.5	•007-427A-QRAD-C6	078-427J-QRAD-C6
3	3/4	5	240V	0.5-1-0.5	•007-427A-QSAD-C6	078-427J-QSAD-C6
3	3/4	5	480V	0.5-1-0.5	•007-427A-QTAD-C6	078-427J-QTAD-C6

Instruments may be used on loads down to 20% of current and between 90% and 110% of voltage rating.

For connection diagrams refer to Fig. E and F.

- c-UL-us certified.

LED Digital | Analog Combination

Crompton Instruments model 007-DI features a combination of the traditional 250° 4 1/2″ switchboard indicator with the trend indication plus the benefits of wide angle LED visibility. This rugged shock and vibration resistant design provides precision accuracy and instantaneous reading via the bright in-dial mounted 3 1/2″ digit LED display.

Description

Model 007-DI digital analog indicators are ideal for all applications where moving pointer instruments are preferable to indicate trend with the simultaneous display of a high visibility precision LED readout for increased user interface.

The 007-DI is interchangeable with other analog and digital instruments designed to directly mount in to a standard ANSI-C39. 4 1/2″ switchboard cut-out.

Available in side, center, or off-set zero versions, the 007-DI can accept AC and DC current and voltage inputs as well as a wide range of transducer outputs, making it suitable for a variety of other applications including low-load current, temperature, speed, Watt/VArs, percent and level.

Features

- Rugged shock and vibration resistant pivot and jewel design
- High accuracy LED display
- Wide selection of AC and DC inputs
- Maximum trend indication visiblity
- Input isolation
- External decimal point selction option
- Interchangeable with 4 1/2″ switchboard meters

Benefits

- Cost effective
- Meets all the requirement of ANSI-C39.1 (1981)
- IP54 (NEMA 3) protection
- Optional IP55 (NEMA 4) gasket
- Bump, shock and vibration proof
- Customized option and features

Applications

- Switchgear
- Distribution systems
- Generator sets
- Control panels
- Energy management
- Building management
- Utility power monitoring
- Process control
- Motor control

Specifications

Inputs	DC Voltage: 20mV-600V (1MΩ input impedance as standard) DC Current: 1mA-1A, 4 to 20mA (Voltage drop 200mV nominal) External shunt operation (50mV and 100mV) AC Voltage: 200mV-600V (1 kΩ /volt) AC Current: 1mA-999mA (Using internal shunt, voltage drop 200mV nominal) 1A, 2A, 5A and 10A using internal current transformer
Common mode rejection	=>80dB @ 50/60Hz
Overload	Voltage: x 1.2 continuous. x 1.5 for 10 seconds Current using internal CT: x 1.2 continuous. x 10 for 10 seconds
External power requirement	Standard: 120 and 240V 315% Optional: 480V 315% AC 40-60Hz
Burden	3VA @ 60Hz
DC	Standard: 12, 24, 48, 110 and 125V ±15%
Display analog	Long-scale moving coil. 250° deflection. Scale length 6.8″ Response time less than 2.5 seconds
Display options	Center or offset zero. Scale plate in colors other than white Colored lines or segments on scale
Digital display	3 1/2 digit red LED. 7 segment (7.6mm, 0.3″ high). Right hand decimal points. Polarity indication: positive / none. Negative / horizontal bar " - ". Update time (standard): 1 per second
Accuracy - analog	DC and AC ±1% of FSD (calibrated at 25°C)
Accuracy - digital	DC: ±0.05% of reading ±1 count ±100ppm of reading / °C max AC current: 0-1 Amp ±0.1% reading ±3 counts ±150ppm of reading / °C AC current: 0-10 amps 30.1% reading 310 counts 3150ppm of reading / °C (maximum) AC voltage: ±0.1% of reading ±3 counts ±150ppm of reading / °C (maximum) Zero ±1 count ±0.2 counts/°C (maximum), DC offset scale only. Warm-up time: 1 minute
Long term stability	±2 counts
Calibration check	Recommended 12 monthly intervals
Enclosure code	IP54 (optional IP55 using panel gasket)
Operational temperature	0 to 60°C (32° - 140° F)
Storage temperature	-20° to 60°C (-4° - 140° F)
Humidity	Up to 90% relative @ 55° C. Tests to BS2011 part 2DA
Isolation test voltage	2kV RMS 60Hz for 1 minute
Interference rejection	To IEEE STD472, ANSI C37 90A, SEN 361503, IEC 255-4

LED Digital | Analog Combination

Product Codes – AC Voltmeters - Direct Reading (40/70Hz)***

Digital accuracy ±0.1% ±3 counts, analog accuracy ±1%

Rating	Scaling*	Catalog number
200mV	0-200mV	007-DIWA-KAKA-C6-**
250mV	0-250mV	007-DIWA-KDKD-C6-**
500mV	0-500mV	007-DIWA-KMKM-C6-**
1V	0-1V	007-DIWA-LALA-C6-**
5V	0-5V	007-DIWA-LSLS-C6-**
10V	0-10V	007-DIWA-MTMT-C6-**
15V	0-15V	007-DIWA-NDND-C6-**
30V	0-30V	007-DIWA-NLNL-C6-**
150V	0-150V	007-DIWA-PZPZ-C6-**
250V	0-250V	007-DIWA-RSRS-C6-**
300V	0-300V	007-DIWA-RXRX-C6-**
500V	0-500V	007-DIWA-SFSF-C6-**
600V	0-600V	007-DIWA-SJSJ-C6-**

For connection diagrams, refer to Figure H.

Product Codes – AC Voltmeters Transformer Rated (40/70Hz)***

Rating	Scaling*	Catalog number
150V	0-300V	007-DIWA-PZRX-C6-**
150V	0-600V	007-DIWA-PZSJ-C6-**
150V	0-750V	007-DIWA-PZSM-C6-**
150V	0-3000V	007-DIWA-PZUA-C6-**
143V	0-5000V	007-DIWA-PTUJ-C6-**
150V	0-5250V	007-DIWA-PZUL-C6-**
150V	0-6000V	007-DIWA-PZUP-C6-**
150V	0-9000V	007-DIWA-PZUY-C6-**
150V	0-15kV	007-DIWA-PZWC-C6-**
150V	0-18kV	007-DIWA-PZWD-C6-**
150V	0-45kV	007-DIWA-PZWJ-C6-**
150V	0-60kV	007-DIWA-PZWL-C6-**

For connection diagrams, refer to Figure H.

* Other scalings are available.
** Specify power supply voltage according to power supply codes table located on page 22.
*** Case types 007 use 10-32 UNF terminals.

AC Voltmeter

Fig. G Models 007-DA2, 007-DAA LCD Digital/Analog Meter

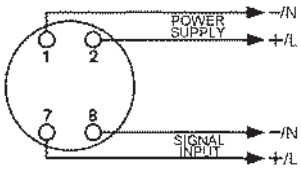

Fig. H Models 007-DI2, 007-DIA 007-DIB, 007-DIC, 007-DIN, 007-DIT, 007-DIV, 007-DIW LED Digital/Analog Meter

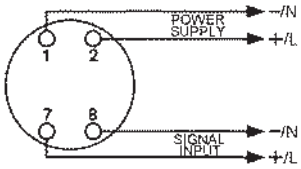

AC Ammeter

Fig. I Models 007-DI2, 007-DIA 007-DIB, 007-DIC, 007-DIN, 007-DIT, 007-DIV, 007-DIW LED Digital/Analog Meter

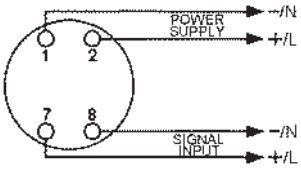

LED Digital | Analog Combination

Product Codes – AC Ammeters - Direct Reading (40/70Hz)***

Rating	Scaling*	Catalog number
1A	0-1A	007-DIBA-LALA-C6-**
1.5A	0-1.5A	007-DIBA-LCLC-C6-**
2A	0-2A	007-DIBA-LELE-C6-**
3A	0-3A	007-DIBA-LJLJ-C6-**
5A	0-5A	007-DIBA-LSLS-C6-**
8A	0-8A	007-DIBA-MJMJ-C6-**
10A	0-10A	007-DIBA-MTMT-C6-**

For connection diagrams, refer to Figure I.

* Other scalings are available.
** Specify power supply voltage according to power supply codes table located on page 22.
*** Case types 007 use 10-32 UNF terminals.

LED Digital | Analog Combination

Product Codes – AC Ammeters Transformer Rated (40/70Hz)

Digital accuracy ±0.1% ±1 counts, analog accuracy ±1%

Rating	Scaling*	Catalog number
5A	0-15A	007-DIBA-LSND-C6-**
5A	0-20A	007-DIBA-LSNG-C6-**
5A	0-25A	007-DIBA-LSNJ-C6-**
5A	0-30A	007-DIBA-LSNL-C6-**
5A	0-40A	007-DIBA-LSNP-C6-**
5A	0-50A	007-DIBA-LSNT-C6-**
5A	0-60A	007-DIBA-LSNW-C6-**
5A	0-75A	007-DIBA-LSPB-C6-**
5A	0-80A	007-DIBA-LSPD-C6-**
5A	0-100A	007-DIBA-LSPK-C6-**
5A	0-150A	007-DIBA-LSPZ-C6-**
5A	0-200A	007-DIBA-LSRL-C6-**
5A	0-250A	007-DIBA-LSRS-C6-**
5A	0-300A	007-DIBA-LSRX-C6-**
5A	0-400A	007-DIBA-LSSC-C6-**
5A	0-500A	007-DIBA-LSSF-C6-**
5A	0-600A	007-DIBA-LSSJ-C6-**
5A	0-750A	007-DIBA-LSSM-C6-**
5A	0-800A	007-DIBA-LSSN-C6-**
5A	0-1000A	007-DIBA-LSSS-C6-**
5A	0-1200A	007-DIBA-LSSU-C6-**
5A	0-1500A	007-DIBA-LSTC-C6-**
5A	0-1600A	007-DIBA-LSTE-C6-**

For connection diagrams, refer to Figure J.

* Other scalings are available.
** Specify power supply voltage, according to power supply codes table located on page 22.

AC Ammeter

Fig. J Models 007-DI2, 007-DIA 007-DIB, 007-DIC, 007-DIN, 007-DIT, 007-DIV, 007-DIW LED Digital/Analog Meter

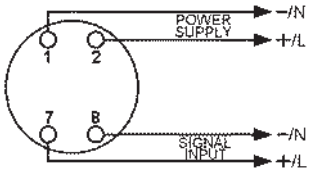

DC Voltmeter

Fig. K Models 007-DI2, 007-DIA 007-DIB, 007-DIC, 007-DIN, 007-DIT, 007-DIV, 007-DIW LED Digital/Analog Meter

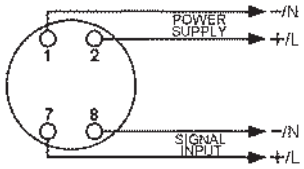

LED Digital | Analog Combination

Product Codes – DC Voltmeters - Direct Reading

Digital accuracy ±0.5% ±1 counts, analog accuracy ±1%

Rating	Scaling*	Catalog number
200mV	0-200mV	007-DIVA-KAKA-**
250mV	0-250mV	007-DIVA-KDKD-**
500mV	0-500mV	007-DIVA-KMKM-**
1V	0-1V	007-DIVA-LALA-**
5V	0-5V	007-DIVA-LSLS-**
10V	0-10V	007-DIVA-MTMT-**
15V	0-15V	007-DIVA-NDND-**
30V	0-30V	007-DIVA-NLNL-**
50V	0-50V	007-DIVA-NTNT-**
75V	0-75V	007-DIVA-PBPB-**
80V	0-80V	007-DIVA-PDPD-**
150V	0-150V	007-DIVA-PZPZ-**
300V	0-300V	007-DIVA-RXRX-**
400V	0-400V	007-DIVA-SCSC-**
500V	0-500V	007-DIVA-SFSF-**
600V	0-600V	007-DIVA-SJSJ-**
150-0-150V	150-0-150V	007-DINA-RXRX-**
300-0-300V	300-0-300V	007-DINA-SJSJ-**
600-0-600V	600-0-600V	007-DINA-SUSU-**

For connection diagrams, refer to Figure K.

* Other scalings are available.

** Specify power supply voltage, according to power supply codes table located on page 22.

LED Digital | Analog Combination

Product Codes – DC Ammeters - Shunt Rated

Digital accuracy ±0.5% ±1 counts, analog accuracy ±1%

Rating	Scaling*	Catalog number
50mV-4mA	Scaled to suit standard shunt ratings	007-DIAA-EY**-**
50-0-50mV-2-0-2mA		007-DICA-GB**-**
100-0-100mV		007-DICA-GM**-**
100-0-100mV-2-0-2mA		007-DICA-FM**-**

For connection diagram, refer to Figure L.

Product Codes – DC Ammeters - Suppressed Zero

Digital accuracy ±0.5% ±1 counts, analog accuracy ±1%

Rating	Scaling*	Catalog number
1-5mA	Scaled to suit standard shunt ratings	007-DIAA-GM**-**
4-20mA		007-DIAA-HG**-**
10-50mA		007-DIAA-HZ**-**

For connection diagram, refer to Figure L.

Product Codes – DC Ammeters - Direct Reading

Digital accuracy ±0.5% ±1 counts, analog accuracy ±1%

Rating	Scaling*	Catalog number
1mA	0-1mA	007-DIAA-FAFA-**
2mA	0-2mA	007-DIAA-FGFG-**
5mA	0-5mA	007-DIAA-FXFY-**
10mA	0-10mA	007-DIAA-GZGZ-**
20mA	0-20mA	007-DIAA-HFHF-**
30mA	0-30mA	007-DIAA-HMHM-**
50mA	0-50mA	007-DIAA-HYHY-**
100mA	0-100mA	007-DIAA-JRJR-**
200mA	0-200mA	007-DIAA-KAKA-**
300mA	0-300mA	007-DIAA-KGKG-**
500mA	0-500mA	007-DIAA-KMKM-**
800mA	0-800mA	007-DIAA-KWKW-**
1A	0-1A	007-DIAA-LALA-**

For connection diagram, refer to Figure L.

* Other scalings are available.

** Specify power supply voltage, according to power supply codes table located on page 22.

DC Ammeter

Fig. L Models 007-DI2, 007-DIA 007-DIB, 007-DIC, 007-DIN, 007-DIT, 007-DIV, 007-DIW LED Digital/Analog Meter

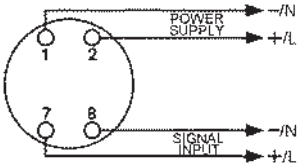

Switchboard Meter Options

Product Codes – Power Supply

Power Supplies	
A5-120 - 250V AC/DC	MU - 12V DC
PQ - 120V AC	BD - 24V DC
A2 - 12 - 48V DC	NR - 48V DC
	PR - 120V DC
	PS - 125V DC

Scale – Options

Options	Option code
Red or colored line or mark (specify position)	SL
Colored zones or segments (specify limits and color(s)	SZ
Customer | user logo imprinted on dial	SM

Construction – Options

Options	Option code
Anti-glare window	BR
Polychloroprene panel gasket	MG

The suffix option code is added at the end of the complete part number.

While TE Connectivity (TE) has made every reasonable effort to ensure the accuracy of the information in this catalogue, TE does not guarantee that it is error-free, nor does TE make any other representation, warranty or guarantee that the information is accurate, correct, reliable or current. TE reserves the right to make any adjustments to the information contained herein at any time without notice. TE expressly disclaims all implied warranties regarding the information contained herein, including, but not limited to, any implied warranties of merchantability or fitness for a particular purpose. The dimensions in this catalogue are for reference purposes only and are subject to change without notice. Specifications are subject to change without notice. Consult TE for the latest dimensions and design specifications. TE Connectivity and TE connectivity (logo) are trademarks. CROMPTON is a trademark of Crompton Parkinson Limited and is used under licence. Other trademarks are property of their respective owners.

TE Energy – innovative and economical solutions for the electrical power industry: cable accessories, connectors & fittings, insulators & insulation, surge arresters, switching equipment, street lighting, power measurement and control.

TE Energy
Customer Center
8000 Purfoy Road
Fuquay-Varina, NC 27526-9349
T: 800-327-6996
F: 800-527-8350

For more information and your country contact person, please visit us at:
cromptonusa.com
crompton-instruments.com
energy.te.com

© 2012 Tyco Electronics Corporation. All rights reserved.
1773466-6 E499 11/12

Series F18

25-90 Amp • SCR/DIODE Modules

- **Industry Standard Package and Circuits**
- **Power Control Building Blocks**

Modules come in an industry standard package, offering nine circuits that can be used singly or as power control building blocks. All models feature highly efficient thermal management for greatly extended cycle life and are UL recognized (file no. E72445). Manufactured in Crydom's ISO 9002 Certified facility for optimum product performance and reliability.

CRYDOM

Control over power

PART NUMBER IDENTIFICATION

Series Type	Current	Circuit Type	Voltage	
F18-Case style	**27** - 25 Amps	(see schematic	**400** - 120 Vac	Contact Factory
	42 - 40 Amps	diagrams)	**600** - 240 Vac	For Higher Voltages
	57 - 55 Amps	Example: **SD**	**1000** - 380 Vac	
	92 - 90 Amps		**1200** - 480 Vac	
Example: F18925D1200			**1400** - 530 Vac	

ELECTRICAL SPECIFICATIONS

SYMBOL	SPECIFICATION	RATINGS 27	42	57	92
I_D	Maximum DC Output Current (Tc = 85˚C)	25A	40A	55A	90A
V_F	Maximum Voltage Drop @ Amps Peak	1.55V @ 75A	1.4V @ 42A	1.4V @ 165A	1.4V @ 270A
T_J	Operating Junction Temperature Range	-40˚C to +125˚C			
di/dt	Critical Rate of Rise of On-State Current @ TJ=125˚C	100A/µs	100A/µs	100A/µs	100A/µs
dv/dt	Critical Rate of Rise of Off-State Voltage [V/µs]	500V/µs	500V/µs	500V/µs	500V/µs
V_{RRM}	Repetitive Peak Reverse Voltage (AC Line)	400 (120 Vac) 600 (240 Vac) 1000 (380 Vac) 1200 (480 Vac) 1400 (530 Vac)			
I_{TSM}	Maximum Non-Repetitive Surge Current ($^1/_2$Cycle, 60Hz)	400A	1000A	1500A	1950A
I^2T	Maximum I^2T for Fusing (t=8.3ms) [A^2sec]	670	4150	9350	15800
I_{GT}	Maximum Required Gate Current to Trigger @ 25˚C	150mA	150mA	150mA	150mA
V_{GT}	Maximum Required Gate Voltage to Trigger @ 25˚C	3.0V	3.0V	3.0V	3.0V
$P_{G(AV)}$	Average Gate Power	0.5W	0.5W	0.5W	0.5W
V_{GM}	Maximum Peak Gate Voltage (Reverse)	5.0V	5.0V	5.0V	5.0V
$R_{\theta JC}$	Maximum Thermal Resistance Junction to Ceramic Base per Chip	0.4˚C/W	0.28˚C/W	0.25˚C/W	0.14˚C/W
V_{ISOL}	Isolation Voltage	2500 V_{RMS}	2500 V_{RMS}	2500 V_{RMS}	2500 V_{RMS}

MECHANICAL SPECIFICATIONS

Weight: (typical) 4.75 oz. (135g)

©1998 CRYDOM CORP Specifications subject to change without notice.

For recommended applications and more information contact:
USA: (800) 8 CRYDOM • (800) 827-9366 • (619) 715-7200 • fax (619) 715-7280
Crydom Corp, 9525 Chesapeake Drive, San Diego, CA 92123 • e-mail: sales@crydom.com
WEB SITE: http://www.crydom.com **FASTFAX Product Information:** (888) 267-9191
UK: (44)1202 812300 • fax (44)1202 812340 Crydom International Ltd., 85, Condor Close, Woolsbridge Industrial Estate, Three-Legged Cross. Wimborne, Dorset, England BH21 6SU
GERMANY: (49) (0)6874 182580 • fax (49)(0)6874 182585 Crydom GmbH, Gewerbegebiet Im Schachen, D-66687 Nunkirchen, Germany • e-mail: vertrieb@crydom.com

ISO 9002 CERTIFIED

Series F18

25-90 Amp • SCR/DIODE Modules

- **Industry Standard Package and Circuits**
- **Power Control Building Blocks**

CRYDOM

Control over power

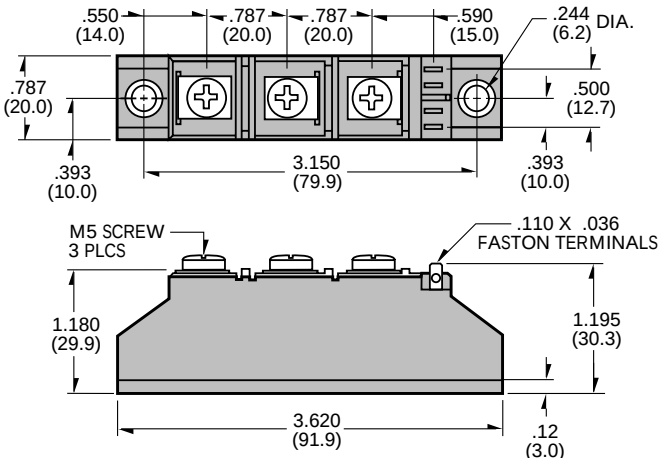

MECHANICAL DIMENSIONS
All dimensions are in inches (millimeters)

PART NUMBER IDENTIFICATION

Series Type	Current	Circuit Type	Voltage	
F18-Case style	**27** - 25 Amps	(see schematic	**400** - 120 Vac	Contact Factory
	42 - 40 Amps	diagrams)	**600** - 240 Vac	For Higher Voltages
	57 - 55 Amps	Example: **SD**	**1000** - 380 Vac	
	92 - 90 Amps		**1200** - 480 Vac	
			1400 - 530 Vac	

Example: F18925D1200

SERIES F18 CIRCUITS

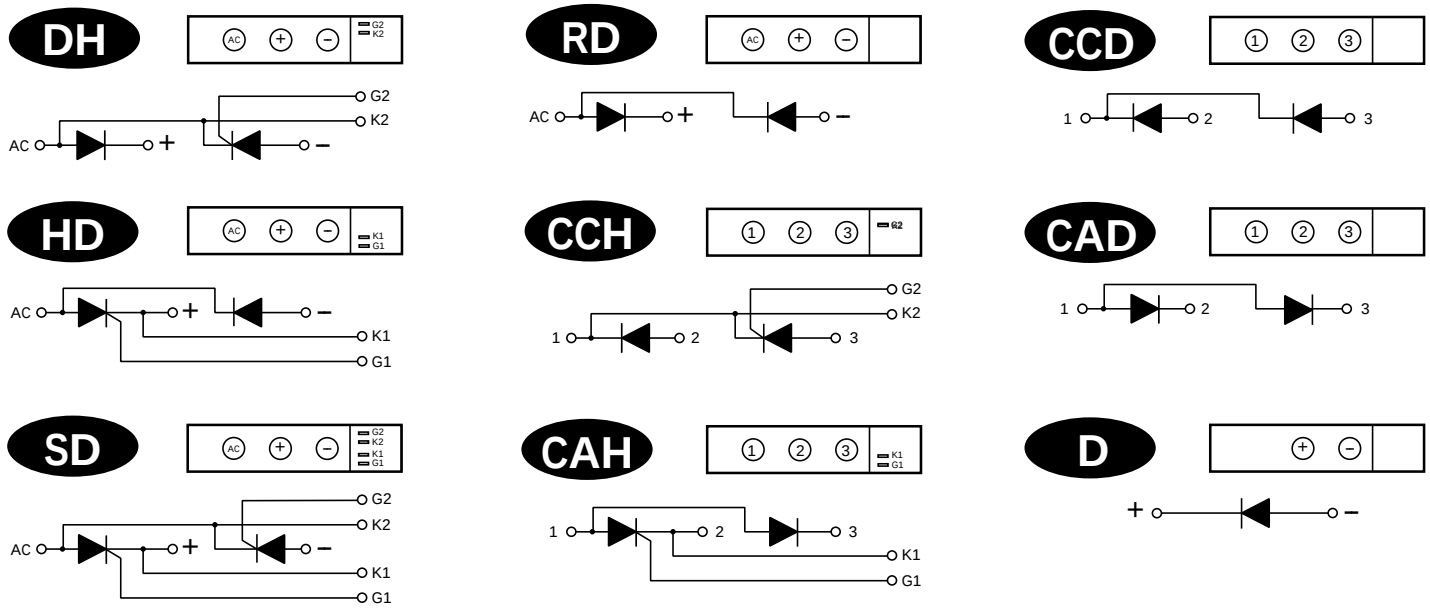

©1998 CRYDOM CORP Specifications subject to change without notice.

For recommended applications and more information contact:
USA: (800) 8 CRYDOM • (800) 827-9366 • (619) 715-7200 • fax (619) 715-7280
Crydom Corp, 9525 Chesapeake Drive, San Diego, CA 92123 • e-mail: sales@crydom.com
WEB SITE: http://www.crydom.com **FASTFAX Product Information:** (888) 267-9191
UK: (44)1202 812300 • fax (44)1202 812340 Crydom International Ltd., 85, Condor Close, Woolsbridge Industrial Estate, Three-Legged Cross. Wimborne, Dorset, England BH21 6SU
GERMANY: (49) (0)6874 182580 • fax (49)(0)6874 182585 Crydom GmbH, Gewerbegebiet Im Schachen, D-66687 Nunkirchen, Germany • e-mail: vertrieb@crydom.com

ISO 9002 CERTIFIED

Features

- Double-Sided, Double-Wiping, Knife-Type Rotary Contacts
- Silver Contact Surfaces for Long, Reliable Low Contact Resistance Life
- #8-32 Terminal Screws – Easy Installation of #12AWG Wire
- Standard Three Hole Panel Mount

Control Switch Special Features

- Spring Return to Normal (Vertical) Position Multi-Pole Contact Arrangements
- Mechanical Red/Green Target
- Slip Contacts for "Normal After" Applications
- Pull to Lock for Safety Lockout (see page 67)

Instrument Switch Special Features

- Make-Before-Break (Shorting) Contacts
- Common Input Tap Switch Arrangement – Sequentially Connected to Several Lines Using the Same Switching Deck
- Positive Positioning Detent Mechanism
- Pre-Wired Applications

Synchroscope Special Features

- Removable Oval Handles
- Keyed Arrangements

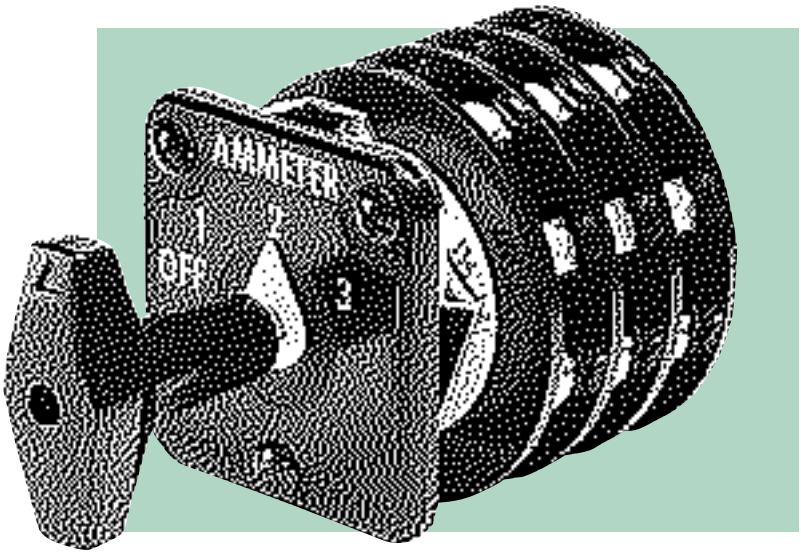

Electrical Specifications

Continuous Ratings

- 30A/600V

Interrupt Ratings

- 20A/120VAC • 15A/240VAC • 6A/600VAC • 3A/125VDC • 1A/250VDC

Overload Current (50 operations)

- 95A/120VAC • 65A/240VAC • 35A/600VAC

Mechanical Specifications

Sections	1 to 10 – Consult Factory For Additional Sections
Poles	1 to 20 – Consult Factory For Additional Poles
Positions	8; Adjustable Stops for 2–8 Position Rotation
Contacts	Break-Before-Make (Non-Shorting); Make-Before-Break (Shorting)
Action	45° Positive Detent or Momentary Indexing
Mounting	Panel Mount, 3 Hole Mounting, Hardware Supplied
Panel Thickness	3/16" Max. Standard – Others Available
Rotor Contacts	Silver Inlay Phosphor-bronze, Double-Wiping
Stationary Contacts	Silver Plated, with Integral Screw Type Terminals
Construction	Contacts Enclosed in Molded-phenolic Insulators

Approvals

- UL: File No. E18174 • CSA • Class 1E Nuclear

Note: The Series 24 Class 1E Utility products comply with the following Nuclear Standards: ANSI/IEEE C37.90, ANSI/IEEE C37.90.01, ANSI/IEEE C37.98, ANSI/IEEE C37.105, ANSI/IEEE 323, ANSI/IEEE 344, ANSI/ASME NQA-1.

ORDERING INFORMATION -

(For generic switches fill out matrix below. For application specific switches see page 15.)
If you don't see the switch you need, please consult the factory.

Assemblage 2

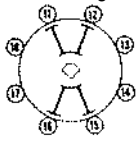

Assemblage 3

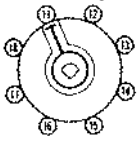

Note 1: Nominal torques, weights, and depth behind panel are listed below.

Note 2: Assemblages are shown with handle in 0° position (12 o'clock).

Model No. **24** □ □□ □ – □

Series

Assemblage
2 = Assemblage 2
3 = Assemblage 3

Handle Type
B = Oval Shank
C = Round Knurled
D = Pistol Grip
E = Removable Oval

Shorting
Blank = No
S = Yes

Matrix Code	No. of Sections	Weight (lbs.)	Torque (lb./in)	Depth Behind Panel
01 =	1	1.1	8	2.41
02 =	2	1.2	9	2.78
03 =	3	1.3	10	3.53
04 =	4	1.4	11	4.28
05 =	5	1.5	12	4.66
06 =	6	1.6	13	5.41
07 =	7	1.7	14	6.16
08 =	8	1.8	15	6.53
09 =	9	1.9	16	7.41
10 =	10	2.0	17	8.03

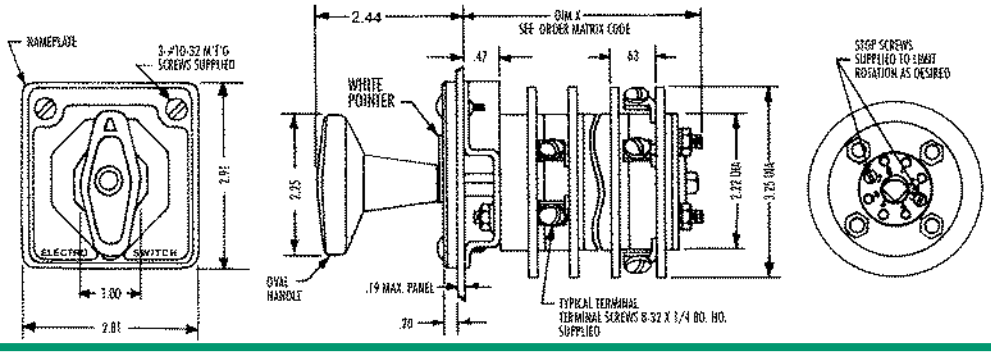

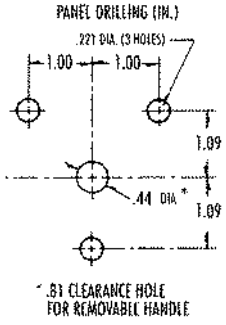

DESIGN A SWITCH TO MEET YOUR NEEDS

SERIES 24 AND SERIES 31 ROTARY SWITCHES

Description	Indexing	Contact Diagram*	Wiring Diagram	Ordering Information

Detent Action Rotary Switches

SINGLE-THROW
OFF - ON
Stop screw positions: 1 & 7
Handle: Oval

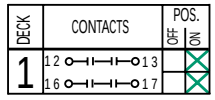

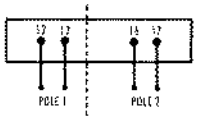

DOUBLE-THROW
No Off
Stop screw positions: 1 & 7
Handle: Oval

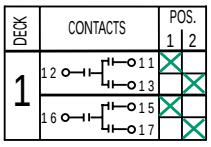

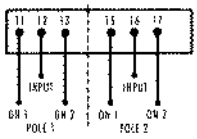

DOUBLE-THROW
With Off
Stop screw positions: 2 & 7
Handle: Oval

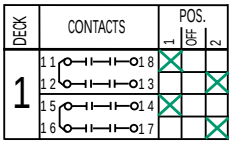

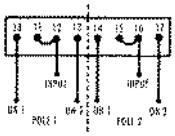

Jumpers** for these arrangements are sold separately (2 per deck Series 24 P/N 02011-10-C3 2 per deck Series 31 P/N 03057-1-C3).

** Contacts are shown for the first deck. All decks are identical.*
Contact number changes in additional decks (e.g. 11 is deck 1, 21 is deck 2, etc.).

*** 11-12, 15-16 connected internally in normal position.*

□□ 2 □□B-□

Series
24 = Series 24
31 = Series 31

Assemblage
2 = 2

No. Of Decks
01 = 1 **06 =** 6
02 = 2 **07 =** 7
03 = 3 **08 =** 8
04 = 4 **09 =** 9
05 = 5 **10 =** 10

Shorting
Blank = No
S = Yes

Model numbers are for universal switches that provide all contacting shown. To limit switches to positions shown put limit screws in rear stop plate.

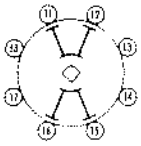

Momentary (Spring-Return) Action Rotary Switches

SINGLE-THROW
OFF - ON
Stop screw positions: 1 & 7
Handle: Oval

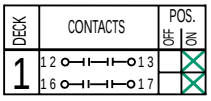

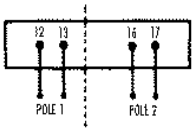

DOUBLE-THROW
No Off
Stop screw positions: 1 & 7
Handle: Oval

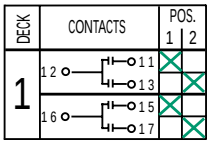

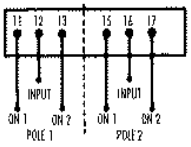

DOUBLE-THROW
With Off
Stop screw positions: 2 & 7
Handle: Oval

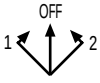

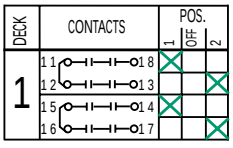

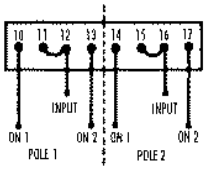

Jumpers** for these arrangements are sold separately (2 per deck Series 24 P/N 02011-10-C3 2 per deck Series 31 P/N 03057-1-C3).

** Contacts are shown for the first deck. All decks are identical.*
Contact number changes in additional decks (e.g. 11 is deck 1, 21 is deck 2, etc.).

*** 11-12, 15-16 connected internally in normal position.*

□□ 2 □□D-□

Series
74 = Series 24
75 = Series 31

Assemblage
2 = 2

No. Of Decks
01 = 1
02 = 2
03 = 3
04 = 4
05 = 5

Shorting
Blank = No
S = Yes

Model numbers are for universal switches that provide all contacting shown. To limit switches to positions shown put limit screws in rear stop plate.

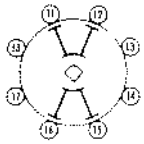

Rotary Tap Switches (2–7 Throw Switches With Off, Oval Handle)

TWO-THROW
Stop screw positions: 1 & 7

TRIPLE-THROW
Stop screw positions: 1 & 5

FOUR-THROW
Stop screw positions: 1 & 4

FIVE-THROW
Stop screw positions: 1 & 3

SIX-THROW
Stop screw positions: 1 & 2

SEVEN-THROW
Stop screw positions: none

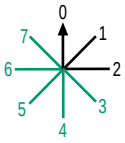

Indexing For 2-7 Throw Tap Switches

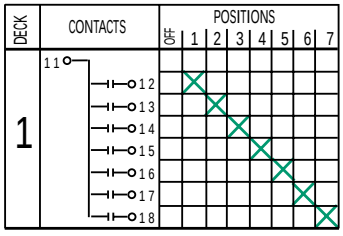

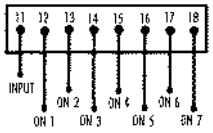

□□ 3 □□B-□

Series
24 = Series 24
31 = Series 31

Assemblage
3 = 3

No. Of Decks
01 = 1 **06 =** 6
02 = 2 **07 =** 7
03 = 3 **08 =** 8
04 = 4 **09 =** 9
05 = 5 **10 =** 10

Shorting
Blank = No
S = Yes

Model numbers are for universal switches that provide all contacting shown. To limit switches to positions shown put limit screws in rear stop plate.

** Contacts are shown for the first deck. All decks are identical. Contact number changes in additional decks (e.g. 11 is deck 1, 21 is deck 2, etc.).*

VOLTMETER – Transfer Switches

2-wire, single-phase or D.C.
Depth Behind Panel: 2.4"
Handle: Round, Knurled
Engraving and jumpering as shown

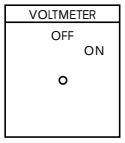

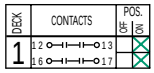

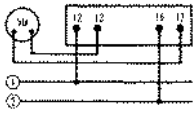

Order #
Series 24 = 2401C
Series 31 = 3101C

4-wire, two-phase or two separate D.C. circuits
Depth Behind Panel: 2.4"
Handle: Round, Knurled
Engraving and jumpering as shown

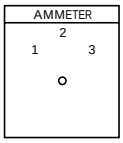

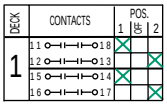

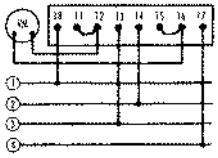

Order #
Series 24 = 2402C
Series 31 = 3102C

3-phase, phase-to-neutral
Depth Behind Panel: 2.9"
Handle: Round, Knurled
Engraving and jumpering as shown

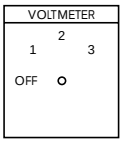

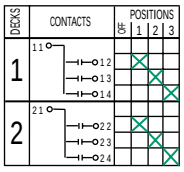

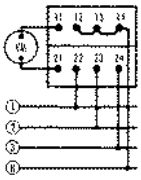

Order #
Series 24 = 2403C
Series 31 = 3103C

VOLTMETER – Transfer Switches

3-phase, phase-to-phase
Depth Behind Panel: 2.9"
Handle: Round, Knurled
Engraving and jumpering as shown

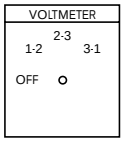

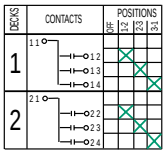

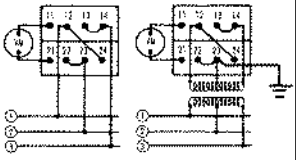

Order #
Series 24 = 2404C
Series 31 = 3104C

3-phase, phase-to-phase and phase-to-neutral
Depth Behind Panel: 2.9"
Handle: Round, Knurled
Engraving and jumpering as shown

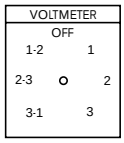

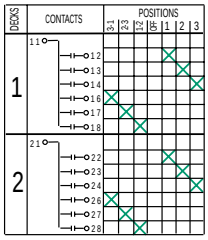

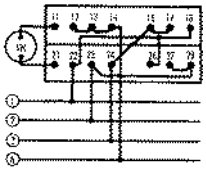

Order #
Series 24 = 2405C
Series 31 = 3105C

6-wire, two 3-phase circuits; phase-to-phase
Depth Behind Panel: 2.9"
Handle: Round, Knurled
Engraving and jumpering as shown

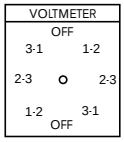

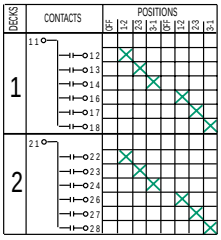

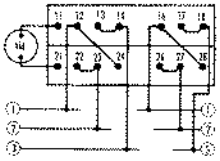

Order #
Series 24 = 2406C
Series 31 = 3106C

AMMETER – Transfer Switches

3-phase, two current-transformers
Depth Behind Panel: 2.9"
Handle: Round, Knurled
Engraving and jumpering as shown

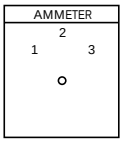

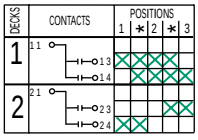

** Denotes make-before-break*

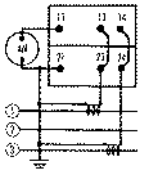

Order #
Series 24 = 2407C
Series 31 = 3107C

3-phase, two current-transformers
Depth Behind Panel: 2.9"
Handle: Round, Knurled
Engraving and jumpering as shown

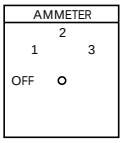

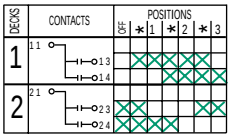

** Denotes make-before-break*

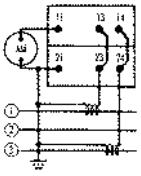

Order #
Series 24 = 2408C
Series 31 = 3108C

3-phase, three current-transformers
Depth Behind Panel: 2.9"
Handle: Round, Knurled
Engraving and jumpering as shown

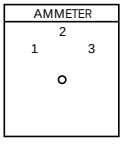

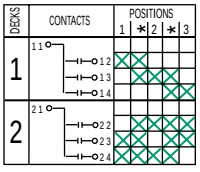

** Denotes make-before-break*

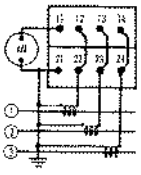

Order #
Series 24 = 2409C
Series 31 = 3109C

AMMETER – Transfer Switches

3-phase,
three current-transformers
Depth Behind Panel: 2.9"
Handle: Round, Knurled
Engraving and jumpering as shown

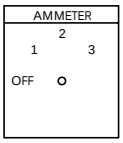

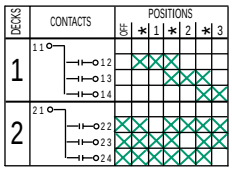

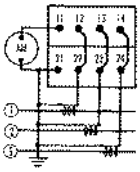

** Denotes make-before-break*

Order #
Series 24 = 2410C
Series 31 = 3110C

3-phase, three current-transformers
three independent circuits
Depth Behind Panel: 5.4"
Handle: Round, Knurled
Engraving and jumpering as shown

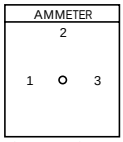

For 2411C or 3111C

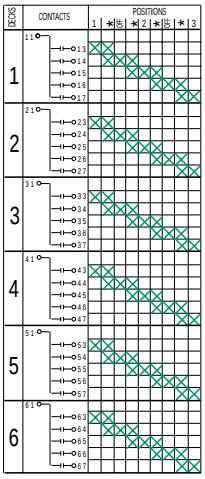

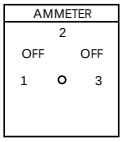

2412C or 3112C

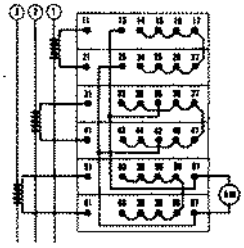

** Denotes make-before-break*

Order #
Series 24 = 2411C, **Series 24 = 2412C,**
Series 31 = 3111C **Series 31 = 3112C**

AMMETER-VOLTMETER-Transfer Switch

3-phase, phase-to-phase three current-transformers
Depth Behind Panel: 4.3"
Handle: Round, Knurled
Engraving and jumpering as shown

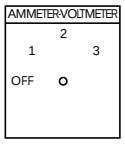

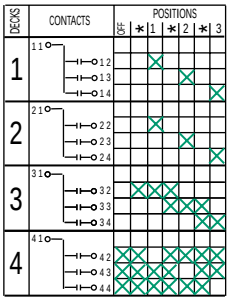

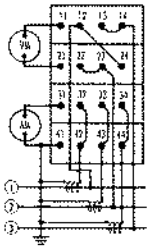

** Denotes make-before-break*

Order #
Series 24 = 2415C
Series 31 = 3115C

WATTMETER – Transfer Switches

3-phase, three current-transformers,
three current-coils
Depth Behind Panel: 3.6"
Handle: Round, Knurled
Engraving and jumpering as shown

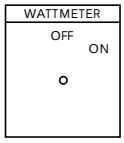

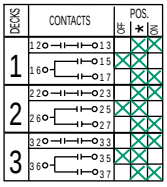

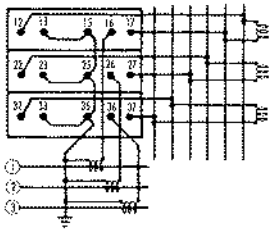

Order #
Series 24 = 2419C
Series 31 = 3119C

3-phase, two current-transformers,
two current-coils, two potential coils
Depth Behind Panel: 3.6"
Handle: Round, Knurled
Engraving and jumpering as shown

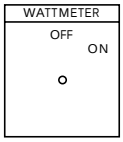

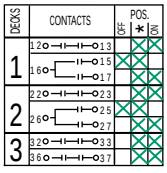

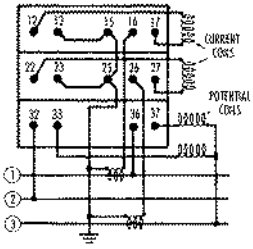

Order #
Series 24 = 2420C
Series 31 = 3120C

WATTMETER – Reversing Switch

Depth Behind Panel: 2.9"
Handle: Round, Knurled
Engraving and jumpering as shown

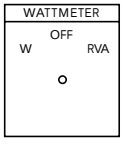

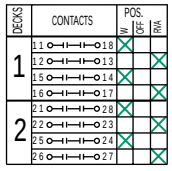

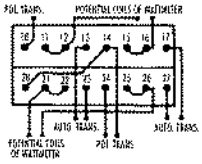

Order #
Series 24 = 2421C
Series 31 = 3121C

POWER-FACTOR–Switch

3-phase, two current-transformers, one or two current-coils
Depth Behind Panel: 2.4"
Handle: Round, Knurled
Engraving and jumpering as shown

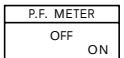

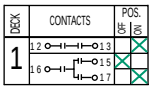

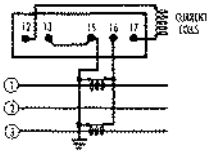

Order #
Series 24 = 2422C
Series 31 = 3122C

SYNCHRONIZING-Switch

Machine-to-bus with interlocks
Depth Behind Panel: 2.9"
Handle: Oval, Removable
Engraving and jumpering as shown

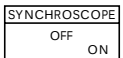

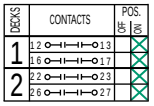

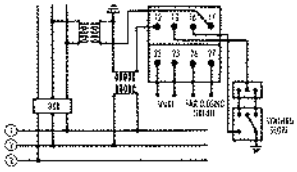

Order #
Series 24 = 2424E

MOTOR CONTROL-Switch, Governor or Rheostat

Split-field motor
Depth Behind Panel: 2.4"
Handle: Pistol-Grip, Spring-Return
Engraving and jumpering as shown

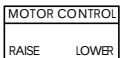

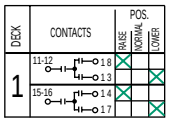

** Contacts 11-12 & 15-16 connected internally in normal position*

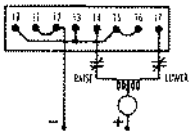

Order #
Series 24 = 2427D
Series 31 = 3127D

TEMPERATURE METER-Transfer Switch

Transfers two wires to three coils, with "TEST" and "OFF"
Depth Behind Panel: 2.9"
Handle: Round, Knurled
Engraving and jumpering as shown

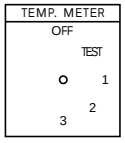

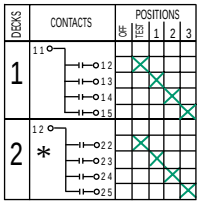

**Deck #2 MBB (shorting) contacts*

Order #
Series 24 = 2432C
Series 31 = 3132C

CIRCUIT BREAKER-Trip Switch

Double-pole single-throw contacts normally open
Depth Behind Panel: 2.4"
Handle: Pistol-Grip, Spring-Return
Engraving and jumpering as shown

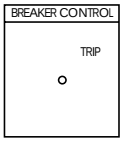

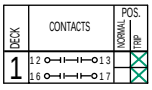

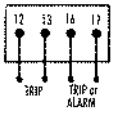

Order #
Series 24 = 2436D

CIRCUIT BREAKER-Control Switches

Depth Behind Panel: 2.4"
Handle: Pistol-Grip, Spring-Return
Engraving and jumpering as shown

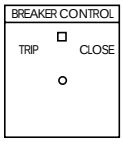

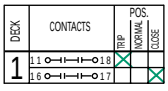

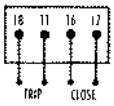

Order #
Series 24 = 2438D

CIRCUIT BREAKER-Control Switches

Depth Behind Panel: 2.4"
Handle: Pistol-Grip, Spring-Return
Engraving and jumpering as shown

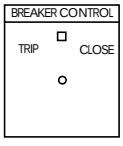

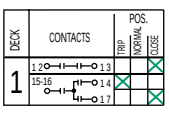

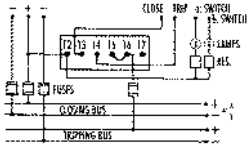

Note: Contacts 11-12 & 15-16 connected internally in normal position

Order #
Series 24 = 2440D

Operate two breakers
Depth Behind Panel: 2.4"
Handle: Pistol-Grip, Spring-Return
Engraving and jumpering as shown

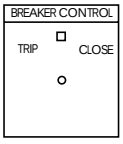

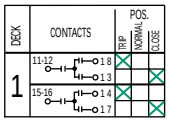

Note: Contacts 11-12 & 15-16 connected internally in normal position

Order #
Series 24 = 2441D

Depth Behind Panel: 4.3"
Handle: Pistol-Grip, Spring-Return
Engraving and jumpering as shown

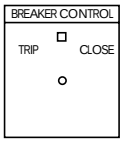

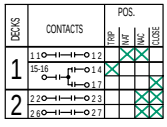

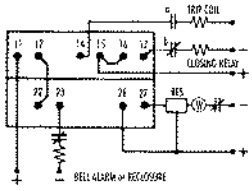

Note: Contacts 11-12 & 15-16 connected internally in normal position

Order #
Series 24 = 2442D

CIRCUIT BREAKER-Control Switches

Depth Behind Panel: 4.7"
Handle: Pistol-Grip, Spring-Return
Engraving and jumpering as shown

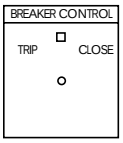

DECKS	CONTACTS	POS. TRIP	NAT	NAC	CLOSE
1	12 — 13				X
	15-16 — 14	X			
	17				X
2	21 — 22	X		X	
3	32 — 33			X	X
	36 — 37			X	X

Note: Contacts 11-12 & 15-16 connected internally in normal position

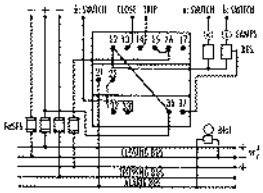

Order #
Series 24 = 2443D

Depth Behind Panel: 4.7"
Handle: Pistol-Grip, Spring-Return
Engraving and jumpering as shown

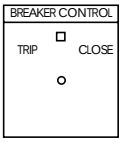

DECKS	CONTACTS	POS. TRIP	NAT	NAC	CLOSE
1	11 — 18	X			
	16 — 17				X
2	21 — 22		X	X	
	25 — 26		X	X	
3	32 — 33			X	X
	36 — 37			X	X

Order #
Series 24 = 2444D

Depth Behind Panel: 5.4"
Handle: Pistol-Grip, Spring-Return
Engraving and jumpering as shown

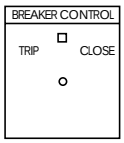

DECKS	CONTACTS	POS. TRIP	NAT	NAC	CLOSE
1	11 — 18	X			
	16 — 17				X
2	21 — 22		X	X	
3	32 — 33			X	X
	36 — 37			X	X
4	41 — 42	X	X		
	45 — 46	X	X		

Order #
Series 24 = 2445D

CIRCUIT BREAKER-Control Switches

Depth Behind Panel: 5.4"
Handle: Pistol-Grip, Spring-Return
Engraving and jumpering as shown

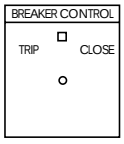

DECKS	CONTACTS	POS. TRIP	NAT	NAC	CLOSE
1	11 — 18	X			
	14 — 15	X			
2	21 — 22		X	X	
	26 — 27				X
3	32 — 33			X	X
	36 — 37			X	X
4	42 — 43			X	X
	46 — 47			X	X

Order #
Series 24 = 2446D

Depth Behind Panel: 4.7"
Handle: Pistol-Grip, Spring-Return
Engraving and jumpering as shown

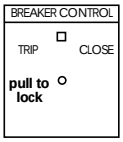

DECKS	CONTACTS	POS. PULL-TL	TRIP	NAT	NAC	CLOSE
1	11 — 18	X	X			
2	22 — 23					X
	26 — 27					X
3	31 — 35		X	X	X	X

Note: Decks 1 & 3 are make-before-break

Order #
Series 24 = 2450D

Depth Behind Panel: 6.9"
Handle: Pistol-Grip, Spring-Return
Engraving and jumpering as shown

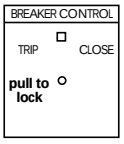

DECKS	CONTACTS	POS. PULL-TL	TRIP	NAT	NAC	CLOSE
1	12 — 13					X
	16 — 17					X
2	21 — 22			X	X	
	25 — 26			X	X	
3	31 — 38	X				
4	41 — 48	X				X
5	52 — 53				X	X
	56 — 57				X	X

Note: Decks 3 & 4 are make-before-break

Order #
Series 24 = 2452D

CIRCUIT BREAKER-Control Switches

Universal Circuit
Depth Behind Panel: 6.2"
Handle: Pistol-Grip, Spring-Return
Engraving and jumpering as shown

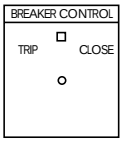

DECKS	CONTACTS	POS. TRIP	NAT	NAC	CLOSE
1	12 — 13				X
	16 — 17				X
2	21 — 28	X			
	24 — 25	X			
3	31 — 32		X	X	
	35 — 36		X	X	
4	42 — 43			X	X
	46 — 47			X	X
5	51 — 52	X	X		
	55 — 56	X	X		

Order #
Series 24 = 2457D

Universal Circuit
Depth Behind Panel: 8.0"
Handle: Pistol-Grip, Spring-Return
Engraving and jumpering as shown

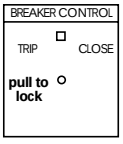

DECKS	CONTACTS	POSITION PULL-TL	TRIP	NAT	NAC	CLOSE
1	12 — 13					X
	16 — 17					X
2	21 — 28		X			
	24 — 25		X			
3	33 — 34	X				
	37 — 38	X				
4	41 — 42			X	X	
	45 — 46			X	X	
5	52 — 53				X	X
	56 — 57				X	X
6	61 — 62		X	X		
	65 — 66		X	X		

Order #
Series 24 = 2458D

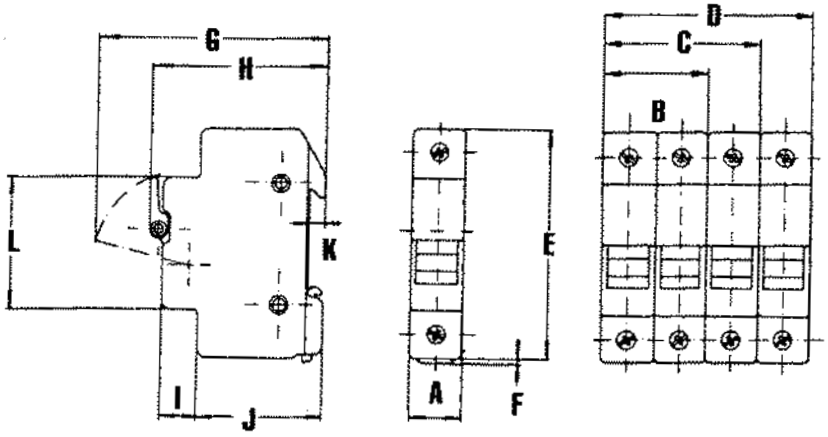
G
H
L
K
I
J
A
F
E
D
C
B

AMP-TRAP
2000
TIME DELAY
ATDR30
30A 600V AC

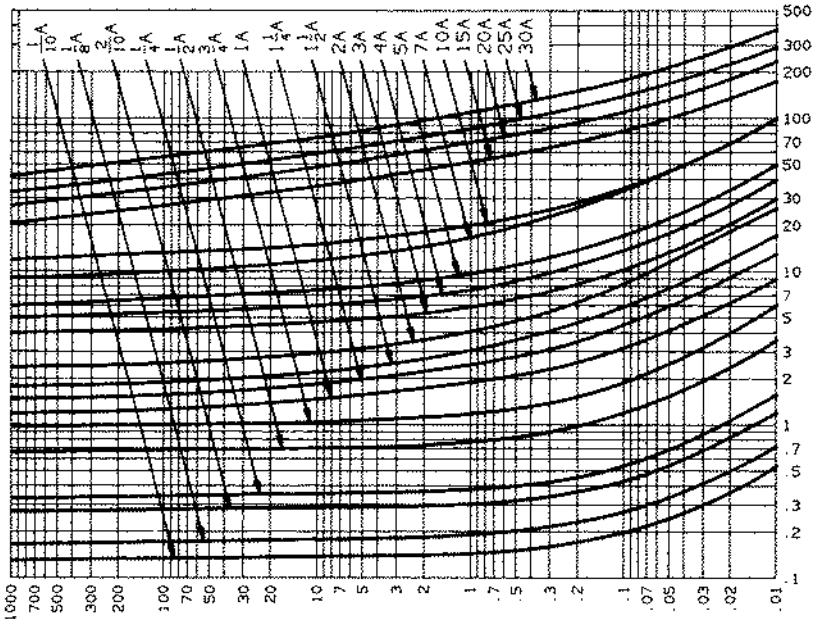
1/10A
1/8A
2/10A
1/4A
1/2A
3/4A
1A
1 1/4A
1 1/2A
2A
3A
4A
5A
7A
10A
15A
20A
25A
30A
1000
700
500
300
200
100
70
50
30
20
10
7
5
3
2
1
.7
.5
.3
.2
.1
.07
.05
.03
.02
.01
500
300
200
100
70
50
30
20
10
7
5
3
2
1
.7
.5
.3
.2
.1

AMP-TRAP
TIME DELAY
ATQR10
10A 600V AC

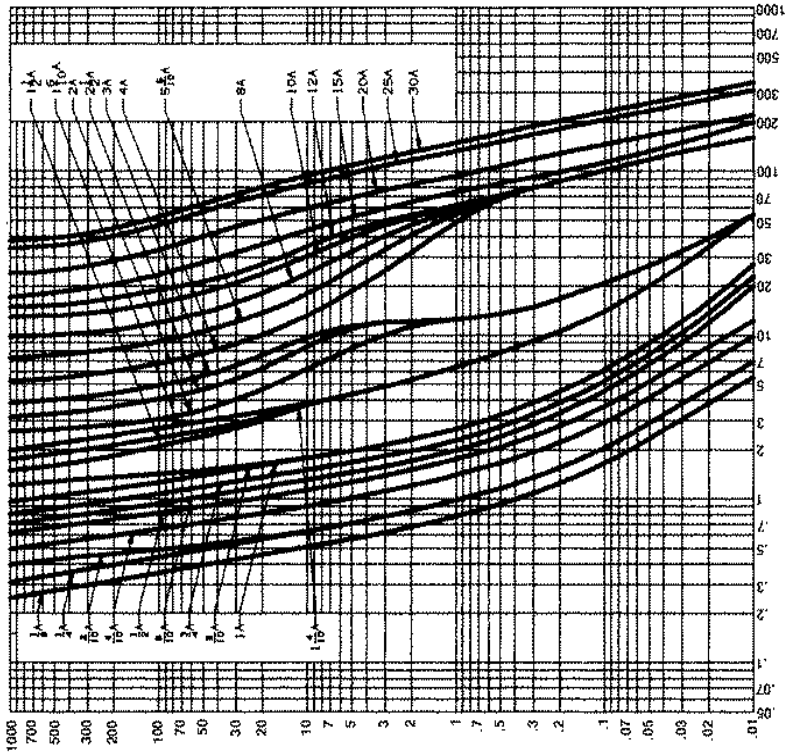
1000
700
500
300
200
100
70
50
30
20
10
7
5
3
2
1
.7
.5
.3
.2
.1
.07
.05
.03
.02
.01
.05
.07
.1
.2
.3
.5
.7
1
2
3
5
7
10
20
30
50
70
100
200
300
500
700
1000
1/8A
1/4A
3/10A
4/10A
1/2A
6/10A
3/4A
8/10A
1A
1 4/10A
1 1/2A
1 6/10A
2A
2 1/2A
3A
4A
5 6/10A
8A
10A
12A
15A
20A
25A
30A

GE
Intelligent Platforms

VersaMax* I/O and Control

Maximum versatility is the guiding principle behind VersaMax* from GE Intelligent Platforms. This compact, extremely affordable control solution can be used as a PLC, as I/O, and as distributed control. With its modular and scalable architecture, intuitive features and ease of use, this innovative control family can save machine builders and end users considerable time and money.

Offering Big PLC Power in a Small Package.

VersaMax CPUs supply a number of features usually found only in PLCs with larger footprints, including up to 64k of memory for application programs, floating point math, real-time clock, subroutines, PID control, flash memory, and bumpless program store. The serial ports support serial read/write and Modbus master/slave communications.

An Abundance of Useful I/O Options.

GE offers a broad range of discrete, analog, mixed, and specialty I/O modules. These modules can be freely combined to create stand-alone I/O stations with up to 256 I/O points and expanded I/O systems with up to 4,096 I/O points.

The Perfect Match for Today's Open Systems.

VersaMax gives you the freedom to connect to a wide variety of host controllers, including PLC, DCS and PC-based control systems by way of Genius*, DeviceNet™, Profibus-DP™ and Ethernet networks. VersaMax also fully supports the power and open architecture of GE's PC Control solutions.

The Ultimate in Cost-effective Control and I/O.

With intuitive diagnostics, hot insertion of modules and quick connect wiring, VersaMax extends uptime, reduces engineering and training needs, and dramatically reducesproject life-cycle costs.

A Design that Maximizes Ease of Use.

Every aspect of VersaMax has been carefully refined to accommodate the user. Snap-together I/O carriers mean that no tools are required for module installation or extraction. A convenient rotary switch can be used for setting bus addresses, reducing programming time. With VersaMax, you can even address I/O automatically.

Easy Trouble Shooting and Machine Setup Using a Handheld PDA.

Proficy* Machine Edition Logic Developer PDA software allows you to interface a Palm® handheld device to your VersaMax controller. With Logic Developer PDA, you can monitor/change data, view diagnostics, force ON/OFF, and configure machine setup — saving you time and increasing productivity.

Ordering Information

Description	Catalog Number		Catalog Number	
Discrete Input Modules[1]	**IC200MDL140**	Input 120 VAC (1 Group of 8) 8 Points	**IC200MDL631**	Input 125 VDC Pos/Neg Logic Isolated 8 Points
	IC200MDL141	Input 240 VAC (1 Group of 8) 8 Points	**IC200MDL632**	Input 125 VDC Pos/Neg Logic Isolated 16 Points
	IC200MDL143	Input 120 VAC Isolated 8 Points	**IC200MDL635**	Input 48 VDC Pos/Neg Logic (2 Groups of 8) 16 Points
	IC200MDL144	Input 240 VAC Isolated 4 Points	**IC200MDL636**	Input 48 VDC Pos/Neg Logic (4 Groups of 8) 32 Points
	IC200MDL240	Input 120 VAC (2 Groups of 8) 16 Points	**IC200MDL640**	Input 24 VDC Pos/Neg Logic (2 Groups of 8) 16 Points
	IC200MDL241	Input 240 VAC (2 Groups of 8) 16 Points	**IC200MDL643**	Input 5/12 VDC Pos/Neg Logic (2 Groups of 8) 16 Points
	IC200MDL243	Input 120 VAC Isolated 16 Points	**IC200MDL644**	Input 5/12 VDC Pos/Neg Logic (4 Groups of 8) 32 Points
	IC200MDL244	Input 240 VAC Isolated 8 Points	**IC200MDL650**	Input 24 VDC Pos/Neg Logic (4 Groups of 8) 32 Points
Discrete Output Modules[1]	**IC200MDL329**	Output 120 VAC 0.5 Amp per Point Isolated 8 Points	**IC200MDL741**	Output 24 VDC Pos Logic 0.5 Amp per Point with ESCP 16 Points
	IC200MDL330	Output 120 VAC 0.5 Amp per Point Isolated 16 Points	**IC200MDL742**	Output 24 VDC Pos Logic 0.5 Amp per Point with ESCP 32 Points
	IC200MDL331	Output 120 VAC 2.0 Amp per Point Isolated 8 Points	**IC200MDL743**	Output 5/12/24 VDC Neg Logic 0.5 Amp per Point 16 Points
	IC200MDL730	Output 24 VDC Pos Logic 2.0 Amp per Point with ESCP 8 Points	**IC200MDL744**	Output 5/12/24 VDC Neg Logic 0.5 Amp per Point 32 Points
	IC200MDL740	Output 12/24 VDC Pos Logic 0.5 Amp per Point 16 Points	**IC200MDL750**	Output 12/24 VDC Pos Logic 0.5 Amp per Point 32 Points
Relay Output Modules[1]	**IC200MDL930**	Output Relay 2.0 Amp per Point Isolated Form A 8 Points	**IC200MDL940**	Output Relay 2.0 Amp per Point Isolated Form A 16 Points
Mixed Discrete Modules[1]	**IC200MDD840**	Mixed 24 VDC Pos Logic Input Grouped 20 Points / Output Relay 2.0 Amp per Point Grouped 12 Points	**IC200MDD846**	Mixed Output Relay 2.0 Amp per Point Isolated 8 Points / Input 120 VAC Grouped 8 Points
	IC200MDD841	Mixed 24 VDC Pos Logic Input Grouped 20 Points / Output Grouped 12 Points/HSC/PWM/PT	**IC200MDD847**	Mixed Output Relay 2.0 Amp per Point Isolated 8 Points / Input 240 VAC Grouped 8 Points
	IC200MDD842	Mixed 24 VDC Pos Logic Output 0.5 Amp Grouped with ESCP 16 Points / Input Grouped 16 Points	**IC200MDD848**	Mixed Output 120 VAC 0.5 Amp per Point Isolated 8 Points / Input 120 VAC Grouped 8 Points
	IC200MDD843	Mixed 24 VDC Pos Logic Input Grouped 10 Points / Output Relay 2.0 Amp per Point Grouped 6 Points	**IC200MDD849**	Mixed Output Relay 2.0 Amp per Point Isolated 8 Points / Input 120 VAC Isolated 8 Points
	IC200MDD844	Mixed 24 VDC Pos Logic Output 0.5 Amp Grouped 16 Points / Input Grouped 16 Points	**IC200MDD850**	Mixed Output Relay 2.0 Amp per Point Isolated 8 Points / Input 240 VAC Isolated 4 Points
	IC200MDD845	Mixed Output Relay 2.0 Amp per Point Isolated 8 Points / Input 24 VDC Pos Logic Grouped 16 Points	**IC200MDD851**	Mixed 12/24 VDC Pos Logic Output 0.5 Amp per Point Grouped 16 Points/Input 5/12 VDC Pos/Neg Logic Grouped 16 PT
Analog Input Modules[1]	**IC200ALG230**	Analog Input 12 Bit Voltage/Current 4 Channels	**IC200ALG263**[6]	Analog Input 15 Bit Voltage 15 Channels
	IC200ALG240	Analog Input 16 Bit Voltage/Current Isolated 8 Channels	**IC200ALG264**[6]	Analog Input 15 Bit Current 15 Channels
	IC200ALG260	Analog Input 12 Bit Voltage/Current 8 Channels	**IC200ALG620**	Analog Input 16 Bit RTD 4 Channels
	IC200ALG261[6]	Analog Input 15 Bit Differential Voltage 8 Channels	**IC200ALG630**	Analog Input 16 Bit Thermocouple 7 Channels
	IC200ALG262[6]	Analog Input 15 Bit Differential Current 8 Channels		
Analog Output Modules[1]	**IC200ALG320**	Analog Output 12 Bit Current 4 Channels	**IC200ALG326**[6]	Analog Output 13 Bit Current 8 Channels
	IC200ALG321	Analog Output 12 Bit Voltage 0-10 V 4 Channels	**IC200ALG327**[6]	Analog Output 13 Bit Voltage 12 Channels
	IC200ALG322	Analog Output 12 Bit Voltage ±10 V 4 Channels	**IC200ALG331**	Analog Output 16 Bit Voltage/Current Isolated 4 Channels
	IC200ALG325[6]	Analog Output 13 Bit Voltage 8 Channels		
Mixed Analog Modules[1]	**IC200ALG430**	Analog Mixed 12 Bit Current 4 Input / 2 Output Channels	**IC200ALG432**	Analog Mixed 12 Bit Voltage ±10 V 4 Input / 2 Output Channels
	IC200ALG431	Analog Mixed 12 Bit Voltage 0-10 V 4 Input / 2 Output Channels		
I/O Carriers	**IC200CHS001**	Barrier Horizontal Style	**IC200CHS025**	Spring Clamp Vertical Style
	IC200CHS002	Box Horizontal Style	**IC200CHS011**	Non-integrated Barrier Style
	IC200CHS003[4]	Connector Vertical Style	**IC200CHS012**	Non-integrated Box Style
	IC200CHS005	Spring Clamp Horizontal Style	**IC200CHS014**	Integrated Box-Thermocouple Compensation
	IC200CHS022	Box Vertical Style	**IC200CHS015**	Non-integrated Spring Style
I/O Interposing Bases	**IC200CHS101**	Non-integrated Box Style	**IC200CHS112**	Non-integrated Box Style
	IC200CHS102	Non-integrated Box Style	**IC200CHS211**	Non-integrated Box Style
	IC200CHS111	Non-integrated Box Style	**IC200CHS212**	Non-integrated Box Style
Remote I/O Units	**IC200DBI001**[2]	Remote I/O DeviceNet Network Interface Unit	**IC200GBI001**	Remote I/O Genius Network Interface Unit
	IC200EBI001[5]	Remote I/O Ethernet Network Interface Unit	**IC200PBI001**	Remote I/O Profibus-DP Network Interface Unit
Network Interface Modules[3]	**IC200BEM002**	PLC Network Communication Profibus-DP Slave	**IC200CHS006**	Local Communications Carrier
	IC200BEM103	PLC Network Communication DeviceNet (Master/Slave)	**IC200CMM020**	Genius Network Interface (IC200GBI001 only) Modbus Master Serial Module (one RS-485 Port)
	IC200BEM104	PLC Network Communications AS-i Master		
Controllers	**IC200CPU001**	CPU 34 Kbyte Configurable Memory, Two Serial Ports(RS-232 and RS-485)	**IC200CPU005**	CPU with 64 Kbyte Configurable User Memory, Two Serial Ports (RS-232 and RS-485)
	IC200CPU002	CPU 42 Kbyte Configurable Memory, Two Serial Ports(RS-232 and RS-485)	**IC200CPUE05**	CPU with 64 Kbyte Configurable User Memory, Two Serial Ports (RS-232 and RS-485), 10 MBIT Ethernet Port
Power Supplies	**IC200PWR001**	Power Supply 24 VDC Input	**IC200PWR201**	Power Supply 12 VDC Input
	IC200PWR002	Power Supply 24 VDC Input with Expanded 3.3 VDC	**IC200PWR202**	Power Supply 12 VDC Input with Expanded 3.3 VDC
	IC200PWR101	Power Supply 120/240 VAC Input	**IC200PWB001**	Power Supply Booster Carrier
	IC200PWR102	Power Supply 120/240 VAC Input with Expanded 3.3 VDC		
Accessories	**IC200ACC003**	EZ Program Store Flash Device for CPUs	**IC200ERM001**[6]	I/O Expansion Receiver Isolated (Up to 750 meters)
	IC200CBL001	CPU Programming Cable (RS-232)	**IC200ERM002**[6]	I/O Expansion Receiver Non-Isolated (Up to 15 meters)
	IC200ETM001[6]	I/O Expansion Transmitter for CPU and Network Interface Units	**BC646MPH101**	Logic Developer PDA software tool with cable adapter

[1]Requires an I/O carrier for wiring termination.
[2]The DeviceNet network interface unit only supports autoconfiguration of I/O. Remote I/O configuration tool will be supported in the future.
[3]These modules are for use in CPU systems.
[4]Refer to VersaMax Modules, Power Supplies, and Carriers Manual GFK-1504 for cables and Interposing Terminal Blocks.
[5]Includes support for EGD and Modbus Ethernet.
[6]Supported by CPUs, Genius, Profibus and Ethernet NIUs only.

GE Intelligent Platforms Contact Information

Americas: **1 800 433 2682** or **1 434 978 5100**
Global regional phone numbers are listed by location on our web site at **www.ge-ip.com/contact**

www.ge-ip.com

©2010 GE Intelligent Platforms, Inc. All rights reserved.
All other brands or names are property of their respective holders.
Specifications are subject to change without notice.

11.10 GFA-252K

IC695CPE330-AAAC RX3i 1GHz 64MB CPU w/Ethernet

The PACSystems* RX3i RX3i CPE330 is a richly featured programmable controller CPU equipped with a 1GHz dual-core microprocessor, 64Mbytes of built-in program memory and two independent high-speed Ethernet interfaces. It is ideally suited for multi-tier communications and for synchronizing large amounts of data. Its metal housing provides superior noise immunity.

The CPE330 is programmed and configured over Ethernet via GE's Proficy Machine Edition (PME) software. It resides in the RX3i main rack and supports all RX3i I/O and Intelligent Option modules, up to 32K I/O points.

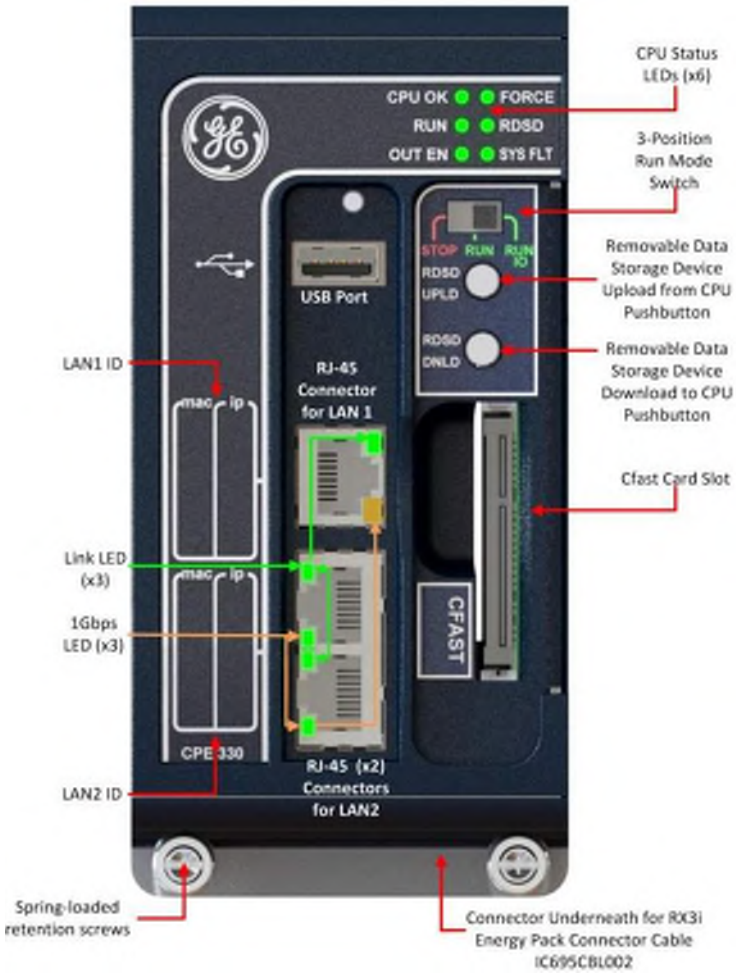

Figure 1: CPE330 Features at a Glance

CPU Features:

- Contains 64Mbytes of user memory.
- Optional Energy Pack, IC695ACC402, allows the CPU to save user memory to non-volatile storage in the event of loss of power.
- Ability to transfer user programs and/or data to and from USB 2.0 A type Removable Data Storage Devices (RDSDs).
- Two independent 10/100/1000 Ethernet LANs. LAN1 attaches via the dedicated (upper) RJ-45 connector shown in Figure 1. LAN2 attaches via the lower pair of internally-switched RJ-45 connectors.
- The embedded Ethernet interface is supported by a dedicated microprocessor core. This dedicated processing capability permits the CPU to support these two LANs with:
    - up to 48 simultaneous SRTP Server connections,
    - up to 16 simultaneous Modbus/TCP Server connections.
    - 32 Clients are permitted; each may be SRTP or Modbus/TCP.
- OPC UA Server with support for up to 5 sessions, 7 subscriptions per session, and up to 12,500 variables
- User may program in Ladder Diagram, Structured Text, Function Block Diagram, or C. Refer to *PACSystems RX7i & RX3i CPU Programmer's Reference Manual, GFK-2950.*
- Configurable data and program memory.
- Supports auto-located Symbolic Variables that can use any amount of user memory.
- Reference table sizes include 32k bits for discrete %I and %Q and up to 32k words each for analog %AI and %AQ. Bulk memory (%W), up to max user memory, is also supported for data exchanges.
- Supports up to 512 program blocks. Maximum size for a block is 128KB.
- For supported I/O, Communications, Motion, and Intelligent modules, refer to the *PACSystems RX3i System Manual*, GFK-2314.
- Ability to display serial number and date code in PME *Device Information Details.*

---

* indicates a trademark of GE Intelligent Platforms, Inc. and/or its affiliates. All other trademarks are the property of their respective owners.

Copyright © 2015 General Electric Company. All Rights Reserved.

Current Release Information

Catalog Number	Date	Firmware Version (Build Number)								Comment
		Field Upgradeable						Not Field Upgradeable		
		Primary	OS Loader	BOC	FPGA Primary	µController Primary	ACC402 EP Base	µController Boot	BIOS	
IC695CPE330-AAAC	June 2015	8.55 (E4YL)	1.02 (E4OC)	1.19 (43A1)	1.171 (16A14)	1.6 (n/a)	2.20 (n/a)	1.2 (n/a)	0ACEE007 19-Mar-15	Feature Enhancements

Upgrade Strategy: Firmware version 8.55 is being released as a field upgrade kit only.

Firmware version 8.55 adds support for the IO Module Firmware Upgrade feature. This feature permits the user to upgrade firmware in modules controlled by the RX3i CPU.

Firmware version 8.55 also resolves a number of issues, as reported in *Problems Resolved by this Revision*.

All versions of the CPE330 are field upgradeable to this firmware release using the upgrade kit listed below. The upgrade is available via download from the GEIP support website http://support.ge-ip.com. Product download number is DN4340.

The firmware upgrade process may take up to four minutes to complete depending on the contents of the update. During the update, the RUN and OUTPUTS ENABLED LEDs blink GREEN and the CPE330 may automatically reset one or more times. All LEDs will be off during the automatic resets. The IC695ACC402 Energy Pack (if present) may also be updated. The energy pack blinks all LEDs GREEN and performs an automatic reset following its update.

Do not manually power cycle the CPE330 or remove the Cap Pack from the Energy Pack base (if present) during the updates as this may place the CPU in an unrecoverable and unusable state.

Upgrade Kit: 41G2016-FW01-000-A2

Release History

Catalog Number	Bundled w/ACC402 Energy Pack	Date	Firmware Version (Build Number)							
			Field Upgradeable						Not Field Upgradeable	
			Primary	OS Loader	BOC	FPGA Primary	µController Primary	ACC402 EP Base	µController Boot	BIOS
IC695CPE330-AAAA	IC695CPK330	Mar 2015	8.45 (E4P6)	1.02 (E4OC)	1.19 (43A1)	1.110 (11A12)	1.5 (n/a)	2.19 (n/a)	1.2 (n/a)	0ACEE007 19-Mar-15
IC695CPE330-AAAB		May 2015	8.50 (E4V9)	1.02 (E4OC)	1.19 (43A1)	1.171 (16A14)	1.6 (n/a)	2.20 (n/a)	1.2 (n/a)	0ACEE007 19-Mar-15

Functional Compatibility

Subject	*Description*	
	Feature	**Minimum Version of PME Required**
Programmer Version Requirements	CPE330 Configuration	Proficy™ Machine Edition Logic Developer PLC 8.60 or later is required for native configuration support of the CPE330 and its embedded Ethernet ports.
	CPU315 & CPU320 Compatible Configuration	If the embedded Ethernet ports are not needed, older versions of Proficy Machine Edition may be used to download a CPU320 configuration to the CPE330. CPU315 configurations must first be migrated to CPU320, then downloaded to CPE330.

RX3i IO Module Firmware Upgrade

File Name	Module	Version
41G1485-MS10-000-A2.zip	ALG222	1.60
41G1485-MS10-002-A1.zip	ALG223	1.60
41G1485-MS10-001-A2.zip	ALG232	1.60
41G1485-MS10-003-A1.zip	ALG233	1.60
82A1190-MS10-000-A2.zip	ALG306	1.02
82A1191-MS10-000-A2.zip	ALG312	1.02
41G1289-MS10-000-A2.zip	ALG392	1.61
82A1726-MS10-000-A1.zip	ALG412	1.02
41G1486-MS10-000-A2.zip	ALG442	1.61
41G1486-MS10-001-A2.zip	ALG542	1.61
44A753049-G03.zip	ALG600	1.14
44A753281-G01.zip	ALG704	1.08
44A753282-G01.zip	ALG708	1.08
44A753283-G01.zip	ALG728	1.01
41G1606-MS10-000-A2.zip	APU300	1.10
44A753277-G06.zip	CMM002	1.34
44A753278-G06.zip	CMM004	1.34
82A1512-MS10-000-A4.zip	CMX128	1.07
82A1844-MS10-000-A0.zip	CMX128	2.00
41G1836-MS10-001-A0.zip	ECM850	1.00
41G2060-MS10-000-A1.zip	EDS001	6.30
41G2076-MS10-000-A1.zip	EIS001	6.30
44A753032-G16.zip	ETM001	6.30
44A753029-G01.zip	MDL660	1.10
41G1522-MS10-000-A0.zip	MDL664	1.00
41G1522-MS10-000-A1.zip	MDL664	1.01
44A753028-G02.zip	MDL754	1.20
41G1520-MS10-000-A0.zip	MDL765	1.00
41G1520-MS10-000-A1.zip	MDL765	1.01
44A73033-G02.zip	PBM300	1.04
41G1444-MS10-000-A6.zip	PMM335	1.61
82A1790-MS10-000-A9.zip	PNC001	2.11
82A1790-MS10-000-B0.zip	PNC001	2.20
82A1729-MS10-000-A1.zip	PRS015	1.04
82A1558-MS10-000-A4.zip	RMX128	1.07
82A1845-MS10-000-A0.zip	RMX128	2.00
41G1930-MS10-000-A0.zip	RMX228	2.00

Notes

The CPE330 IO Module Firmware Upgrade procedure is transacted over Ethernet using a web browser and contains enhanced security features. Instructions for this procedure are included in the CPE330 upgrade kit documenation.

The upgrade files listed here contain the necessary security features to allow them to work with the new enhanced security procedure.

Older versions may not contain the necessary security features to allow them to work with the new enhanced security procedure. Should you need to use an older version upgrade kit which is incompatible, contact GE for assistance at http://www.geautomation.com/how-can-we-help-you.

All future IO module firmware upgrade kits will be compatible with the new security feature.

HART® Pass Through	HART Pass Through entails usage of PC-based applications, RX3i Analog modules with HART functionality and (optionally) supporting PROFINET products. HART Pass Through operation is described in the *PACSystems HART Pass Through User Manual*, GFK-2929.
USB	CPE330 is compatible with USB 1.1 and USB 2.0 devices.
CFast	Cfast slot is not enabled in this release.

® HART® is a registered trademark of the HART Communication Foundation of Austin, Texas USA. Any use of the term HART hereafter in this document, or any document referenced by this document, implies the registered trademark.

Subject	Description
RX3i Backplane Hardware Revision Compatibility	The following backplane hardware revisions MUST be used: IC695CHS012-BAMP IC695CHS016-BAMP IC695CHS012CA-BAMP IC695CHS016CA-BAMP or IC695CHS007-AA (or later) IC695CHS012-CA (or later) IC695CHS016-CA (or later) IC695CHS012CA-CA (or later) IC695CHS016CA-CA (or later)
Series 90-30 Module Compatibility	The following Series 90-30 modules are supported by the PACSystems RX3i: **Discrete Input Modules:** IC693ACC300, IC693MDL230/231/240/241/250/260/632/634/635/645/646/648/654/655/660[1] **Discrete Output Modules:** IC693MDL310/330/340/350/390/730/731/732/733/734/740/741/742/748/752/753/754/758/760/916/930/931/940 **Discrete Combinational:** IC693MAR590, IC693MDR390 **Analog I/O Modules:** IC693ALG220/221/222/223/390/391/392/442 **High Speed Counter:** IC693APU300 **FANUC I/O Link:** IC693BEM320, IC693BEM321 **Motion Control:** IC693DSM314, IC693DSM324 **GENIUS:** IC693BEM331 **Device Net Master:** IC693DNM200 **Serial IO Processor:** IC693APU305 **Temperature Control:** IC693TCM302, IC693TCM303 **Power Transducer:** IC693PTM100, IC693PTM101 No other Series 90-30 modules are supported.
IC694 (blue) Module Compatibility	CPE330 supports all IC694* modules.[1,2]
IC695 (PCI) Module Compatibility	CPE330 supports all IC695* modules.
Series 90-30 Main Rack Compatibility	Series 90-30 Main Racks cannot be used in a PACSystems RX3i system. Series 90-30 CPUs do not operate in PACSystems RX3i Racks.
Isolated 24Vdc power	In applications that use the IC69xALG220/221/222, consult *PACSystems RX3i System Manual*, GFK-2314 for details of wiring the 24Vdc power.
Recommended IC200ALG240 revision	When a VersaMax™ system Genius® Network Interface Unit (IC200GBI001) interoperates with a Genius Bus Controller located in a PACSystems PLC, and the VersaMax system contains an IC200ALG240 Analog Input Module, it is recommended that the IC200ALG240 firmware be updated to Revision 1.20 or later. Use firmware update kit 44A752313-G02, available here: http://support.ge-ip.com/support/index?page=docchannel&id=S:DO506&actp=search
Configuration of IC694MDL754	Always configure sixteen bits of module status when using this module. Configuring zero bits of module status will result in invalid data in the ESCP status bits of the module.

[1] IC693MDL660/IC694MDL660 firmware must be updated to version 1.10
[2] IC694MDL754 firmware must be updated to version 1.10

Subject	*Description*
IC695CPE330 AC Power Supply Compatibility	For new installations using AC power supplies, the CPE330 requires an IC695PSA040H or IC695PSA140D (or higher) revision power supply to ensure compatibility. For retrofit installations using AC power supplies, the CPE330 may require an IC695PSA040H or IC695PSA140D (or higher) revision power supply depending on the total current load in the backplane. If the total current load exceeds the minimum current threshold of the existing power supply, no power supply change is required.
CPU315 & CPU320 Configuration Compatibility	The CPE330 may be interchanged with a corresponding CPU320 with no upgrade to Proficy Machine Edition (PME) software. Logic and configuration equality in PME are maintained when storing the same project to either a CPU320 or a CPE330. Migration of CPU315 applications to the CPE330 is possible with no upgrade to PME by converting them to a CPU320 application and storing the project to the CPE330. Versions of PME with native CPE330 support allow either a CPU320 or a CPE330 configuration to be stored to the CPE330. When a CPE330 is configured as a CPU320, Ethernet properties cannot be configured however, the embedded Ethernet ports may be used with the default IP Addresses.
Migration of CPU315 & CPU320 Serial Applications to CPE330	Applications using the embedded serial ports of the CPU315 or CPU320 should move serial functionality to the IC695CMM002 or IC695CMM004 Serial Communication Modules when migrating to the CPE330 since it does not have embedded serial ports.
Ethernet AUP File Support	The CPE330 does not support Advanced User Parameter (AUP) files for its Embedded Ethernet interfaces. AUP files are supported for external IC695ETM001 Ethernet modules.
Service Request 56 & 57 *Logic Driven Read/Write to Flash* Support	The IC695ACC402 Energy Pack automatically saves all user memory to flash when the CPE330 is powered off, and restores it to RAM when the CPE330 is powered on. Consequently, the CPE330 does not support Service Requests 56 & 57 *Logic Driven Read/Write to Flash*. The ENO output of the function block returns no power flow if these service requests are executed. When migrating a CPU320 application that uses Service Requests 56 & 57 to a CPE330, the IC695ACC402 Energy Pack needs to be attached.
Supported Browsers for CPE330 Firmware Update	The CPE330 supports secure firmware update over Ethernet using a web browser. Supported browsers are listed below along with the minimum required version: • Firefox: 31.0 • Chrome: 36.0.1985.143 m • Internet Explorer: 8.0.7601.17514 • Opera: 23.0.1522.75 • Safari: 7.0.5
CIMPLICITY OPC UA Client	When using CIMPLICITY OPC UA Client with the CPE330, ensure the total number of subscriptions does not exceed the maximum number of subscriptions per session supported by the CPE330. (The CPE330 supports up to 5 sessions, 7 subscriptions per session, and up to 12,500 variables.) CIMPLICITY OPC UA Client is configured to create one subscription for every 500 items by default. If, for example, a project contains 1000 monitored items, CIMPLICITY will create two subscriptions. The number of items per subscription may be modified from the Device Configuration Panel / OPC UA DA Configuration / Subscriptions / Max. Number of Monitored Items.

Subject	Description
CPE330 vs CPU320 Power Requirements	When migrating a CPU320 application to a CPE330, the power consumption must be recalculated to ensure adequate power is available in the new system. The maximum power consumption of a CPE330 is 18W whereas the maximum consumption a CPU320 is 9.3W. Depending on the total power available in the CPU320 system, it is possible that additional RX3i power supplies will be required. Users may view the combined power consumption of an RX3i rack in PME by right-clicking the power supply whose icon has a power usage indicator and selecting properties. **CPE330 Power Requirements** / **CPU320 Power Requirements** **+3.3 Vdc:** 0.0 A / 1.0 A **+5.0 Vdc:** 0.0 A / 1.2 A **+24 Vdc Relay:** 0.625 A without Energy Pack / 0.0 A 0.750 A with IC695ACC402 Energy Pack
PACSystems Energy Pack Compatibility	**The only energy pack compatible with the IC695CPE330 is the IC695ACC402.** The CPE330 is not compatible with the ICRXIACCEPK01 RXi Controller Energy Pack or the IC695ACC400 CPE305/310 Energy Pack. ▪ It is not physically possible to connect the CPE330 and the IC695ACC400 CPE305/310 Energy Pack together. ▪ However, it is possible to connect the CPE330 and the ICRXIACCEPK01 RXi Controller Energy Pack. Connecting the CPE330 to the RXi Energy Pack is not harmful. However, if power is applied, the CPE330 will continuously reset and not power up. Should this occur, turn the CPE330 off and disconnect the RXi Energy Pack. ▪ It is possible to connect the ICRXIACCCPK01A RXi Capacitor Pack to the IC695ACC402 Energy Pack Base. If this occurs, the capacitor pack may take longer to charge and a battery fault may be logged. Do not use the CPK01A RXi Capacitor Pack with the ACC402 Energy Pack Base. ▪ It is also physically possible to connect the IC695ACC402 CPE330 Energy Pack and IC695ACC412 Capacitor Pack to an ICRXICTL000 controller. If this occurs no errors are logged. However the capacitors will reach their end-of-life threshold faster than the RXi Capacitor Pack ICRXIACCCPK01. Do not use the CPE330 Energy Pack or Capacitor Pack with the RXi Controller.

Problems Resolved by this Revision

Subject	ID code	Description
IC693 & IC694 IO Modules not Detected After Hot Insertion	DE2584	With previous firmware versions, Series 90-30 IC693 and RX3i IC694 IO modules were not detected following hot insertion into the RX3i main rack. The affected module was not configured and no *addition of module* fault was logged. This problem has been resolved by firmware version 8.55.
SRTP Channel COMMREQ 0290H Status Code	DE2572	Previously, an SRTP channel COMMREQ with a period shorter than two seconds may have unexpectedly received a 0290H *period expired* COMMREQ status code. The unexpected receipt of error code 0290H has been resolved by firmware version 8.55.

New Features and Enhancements

- **IO Module Firmware Upgrade:** The IO Module Firmware Upgrade feature (a.k.a. Indirect Firmware Upgrade) provides the ability to securely update IO module firmware over Ethernet using a web browser.

Restrictions and Open Issues

Subject	ID code	Description
Firmware Update Login Timeout	DE196 DE205 DE2626	The CPE330 enforces a two minute login activity timeout on the *Firmware Update* web page. Selecting an update package on the *Firmware Update* page and pressing the *Upload File* button after the timer expires initiates a firmware update. However, instead of displaying the firmware update status, one of these scenarios may occur: • Another login page is presented. After entering the user name and password the update status is displayed. • The web browser loses connection with the CPE330 and is unable to display update status because the CPU is automatically resetting while applying the firmware update. After the reset completes, pressing the refresh button in the browser shows the installed firmware version. These timeout issues may be avoided by having the firmware file ready so that the firmware update can be initiated immediately after logging in.
Running applications with fatal faults from flash	DE86	If an application that generates a fatal fault (such as a watchdog timeout) is stored to flash, the controller is configured to power-up from flash and go to RUN, and the RUN/STOP switch is disabled, the application may become stuck in an endless loop. (Power-up from flash, go to RUN, watchdog timeout, repeat.) Return the CPE330 to the factory if this condition is encountered. It is recommended that users thoroughly test their application before writing it to flash.
Clear All clears PLC_BAT and masks Energy Pack failures	DE715	A Clear All operation clears the values of all %S bits. After this operation the PLC_BAT status bit value may not reflect the actual status of the Energy Pack. For example, an Energy Pack in a failed state prior to the Clear All operation will remain in the failed state after the Clear All. Nonetheless, the PLC_BAT bit will indicate a good state as a result of the Clear All operation. Remove the Cap Pack and reinstall it in order to reassert the PLC_BAT status bit.
Using OEM Passwords with Enhanced Security Disabled	DE755	Single character OEM passwords are not supported when enhanced security is disabled.
PME cannot display reference tables with Enhanced Security Enabled and OEM Locked	DE781	When Enhanced Security is enabled and OEM protection is engaged, only reference areas specified within the Access Control List can be viewed by a programmer, or HMI, regardless of privilege level. For example, if viewing %R memory from words 1 to 400 then the Access Control List must include read access to %R words 1 to 400. A custom reference view table with smaller reference sizes may also be used.
Controller Communication Window Timer settings below 10 ms are ignored	DE845	Normal sweep allows the configuration of the Controller Communications Window Timer for Limited operation and a time range from 0 to 255 ms (default 10 ms). However, the system is currently ignoring settings in the 0 to 9 ms range which results in an effective window time of 10 ms for this configuration range. This means a sweep impact of up to 10 ms may occur for some complex Controller Communication Window operations. If this operation is undesired then it is recommended to use a different sweep mode such as Constant Sweep or Constant Window.

Subject	ID code	Description
Selecting Variable Publish State = Internal causes variable to be published in Address Space	DE1330	PME allows users to select a Variables Publish State to Internal. In some cases, this will cause the variable to be published to the OPC-UA address space. The manual states users should select *External Read/Write* or *External Read-Only* to publish to the address space. This is the recommended approach.
OPC-UA Server Restart Fails to complete	DE1326	The OPC-UA server may fail to restart after a large number (~200) of restart sequences are attempted without an intervening power cycle. A restart sequence will occur with the following operations: Run Mode or Stop Mode Store when published variables change and OPCUA server is running. Whenever this occurs, the *server restart bit* will stay on indefinitely. The issue is contained to OPC-UA server operation only. Power cycling the controller is the only way to address the issue.
CPE330 Firmware Update and IE 11.0	DE2038	CPE330 firmware may be updated using Internet Explorer 11. In rare instances, however, it is possible that the web page may not show firmware update status. If this occurs, wait until the CPE330 OK LED is on solid green indicating that the firmware update is complete, then click refresh button in IE. The web page should refresh and show the new firmware version.
Abrupt Power-down Fault	DE2256	An *Abrupt power-down detected at power-up* fault is recorded in the CPE330 PLC Fault Table if both the *Logic/Configuration Power-up Source* and *Data Power-up Source* in the hardware configuration are set to *Always Flash* or *Conditional Flash* and the CPE330 is turned off without an energy pack connected. This fault indicates that user memory was not preserved across the power cycle and does not interfere with normal operation because the application is already configured to power up from flash if there is no energy pack connected.
Power Supply Loss of Module Fault After Configuration Download	DE2257 CR-6257	A *Loss of, or missing option module* fault may appear for any RX3i power supply configured in the main rack whenever a hardware configuration download is performed after a BOC update occurs. (A BOC update occurs during a firmware update when switching between different CPU models in a single backlpane and also the first time a particular CPU model is placed in a backplane. BOC updates are indicated by the RUN and Output Enabled LEDs blinking in unison briefly during power up.) This issue does not affect normal operation and may be cleared by power cycling the CPU.
Missing *Addition of IOC* event, when ECM850 module restarts due to reason like reset push-button and SVC_REQ 24	DE1248	When ECM850 module RESET is triggered using SVC_REQ 24 or via Reset pushbutton, PLC CPU do not report *Addition of IOC* fault message in Controller fault table, after successful reset of module.
Blink Code 1-2-1-8 After Power On	DE2017	Rarely, after powering on, the CPE330 may display blink code 1-2-1-8 on its LEDs. If this occurs, cycle power to the CPU to clear the condition.
Loss of IO Modules in Expansion Rack	DE2336	Rarely, IO modules in an expansion rack may fail to reconfigure if the expansion rack is turned off and back on while the main rack remains powered on. If this occurs, turn the expansion rack off and back on again or, download hardware configuration using PME.

Subject	ID code	Description
ALG616, ALG626, & ALG628 Terminal Block Present Status Bit	DE2422	IC695ALG616-Fx, IC695ALG626-Fx, and IC695ALG628-Fx (and later hardware revision) analog modules may not set the *terminal block present* status bit in their module status after a CPE330 firmware update completes, even if the terminal block is installed. Normal operation of the *terminal block present* status bit may be restored by performing one of the following operations: removing and reinstalling the terminal block, resetting the analog module using Service Request #24, or power cycling the rack.
Ethernet COMMREQs not always delivered on the first logic sweep	ISS183540	In certain instances where User Logic is of sufficient size and a COMMREQ is issued on first logic sweep, a race condition existing between determination of the CPU Run/Stop state and logic-driven issuance of a COMRREQ which may cause the COMMREQ to be aborted before its transmission is attempted. To the user, it would appear as if the COMMREQ was never issued. The condition is much more observable on COMMREQs issued from the CPU's embedded Ethernet port. To avoid the possibility of encountering this condition, users should avoid issuing COMMREQs on first logic sweep.
PMM335 loss is occasionally detected on power down of the CPU. (Module is not lost on power up.)	ISS182714	The PMM335 monitors power loss, independently of the CPU. The CPE305, CPE310, CPU315, CPU320, CRU320, and CPE330 are fast enough that they can occasionally detect and log the loss of the PMM335 just before the CPU itself powers down. No corrective action is required; This situation can be verified in two ways: (1) by inspecting the timestamp in the loss-of-module report one can correlate it with the power-down event, and (2) by performing a PME Show Status Details report one can see that the PMM335 is present after power up.
Hot Swapping some Analog modules slowly result in modules not being recognized	CR-7365	Occasionally during a hot insertion (hot swap) of IC695 Non-Isolated Analog Input Modules, input channels may take up to 2 seconds to reflect actual input values after the module ok bit is enabled in the module status word. This has only been seen when the hot insertion has been done slowly (i.e. approximately 1.5 seconds to insert the module).
Ethernet Disconnect During Word for Word Change	CR-2234	If the Ethernet connection is broken during a word–for-word change, the programmer may not allow a subsequent word-for-word change after reconnecting due to the fact that it thinks another programmer is currently attached. To correct the issue, go offline and then back online again.
Simultaneous Clears, Loads and Stores Not Supported	CR-3118 CR-3300	Currently, PACSystems CPUs do not support multiple programmers changing CPU contents at the same time. The programming software may generate an error during the operation. Simultaneous loads from a single PLC are allowed.
Hardware Configuration Not Equal After Changing Target Name	CR-3181	If the user stores a hardware configuration to flash that sets *Logic/Config Power up Source* to *Always Flash* or *Conditional Flash* and then subsequently changes the name of the target in the programming software, the hardware configuration will go Not Equal and will not Verify as equal.

Subject	ID code	Description
PLC and IO Fault Tables May Need to be Cleared Twice to Clear Faulted State	CR-3191	Both PLC and IO fault tables may need to be cleared to take the CPU out of Stop/Fault mode. If one of the tables contains a recurring fault, the order in which the tables are cleared may be significant. If the CPU is still in Stop/Fault mode after both tables are cleared, try clearing the fault tables again.
Setting Force On/Off by Storing Initial Value	CR-3317	Once a *Force On* or *Force Off* has been stored to the PLC, the user cannot switch from *Force On* to *Force Off* or vice-versa directly by downloading initial values. The user can turn off the force by doing a download, and then change the *Force On* or *Force Off* by another download.
Second programmer can change logic while in Test & Edit mode	CR-4223	While currently active in a Test and Edit session using Machine Edition on one PC, Machine Edition running on another PC is not prevented from storing new logic to the PLC.
Must Have Logic If Powering-Up From Flash	CR-4633	If the application will configure the CPU to retrieve the contents of flash memory at power-up, be sure to include logic along with hardware configuration when saving to flash memory.
Two loss of module faults for Universal Analog Module	CR-5462	Occasionally, the hot removal of the Universal Analog Input Module (IC695ALG600) results in two *Loss of I/O Module* faults instead of one.
Power up of Series 90-30 HSC module may take as long as 20 seconds	CR-5666	As power is applied to a 90-30 High-Speed Counter, the *module ready* bit in the status bits returned each sweep from the module may not be set for as long as 20 seconds after the first PLC sweep, even though there is no *loss of module* indication. I/O data exchanged with the module is not meaningful until this bit is set by the module. Refer to pages 4-3 to 4-5 of *High Speed Counter Modules for PACSystems* RX3i and Series 90*-30 User's Manual,* GFK-0293D.
Informational fault at power-up	CR-5850	Intermittently during power-up, an Informational non-critical CPU software fault may be generated with fault extra data of 01 91 01 D6. This fault will have no effect on the normal operation of the PLC. But, if the hardware watchdog timer expires after this fault and before power has been cycled again, then the outputs of I/O modules may hold their last state, rather than defaulting to zero.
Extended Memory Types for IO Triggers	CR-5952 CR-6319	%R, %W and %M cannot be used as IO triggers.
Possible PME inability to connect	CR-6067	Infrequently, an attempt to connect a programmer to a PLC via Ethernet will be unsuccessful. The normal connection retry dialog will not be displayed. Rebooting the computer that is running the programmer will resolve the behavior.
GBC30 may not resume operation after power cycle	CR-6167	In rare instances, a GBC30 in an expansion rack may not resume normal operation after a power cycle of either the expansion rack or the main rack.
Configuration of 3rd Party Modules	CR-6207	When configuring a 3rd Party Module in PME, a non-zero reference length must be assigned to at least one reference type. For example, assign eight bits of %I. Do not specify a length of zero for all reference types since this will cause the module to not function properly in the system.
Power supply status after power cycling	CR-6294	Rarely, turning a power supply on or off may not result in an add or loss fault. Also, the slot will appear empty in the programmer's online status detail view. The power supply continues to operate normally. Power cycle to restore normal status reporting.

Subject	ID code	Description
Don't use multiple targets	CR-6450	In a system in which the hardware configuration is stored from one target and logic is stored from a different target, powering-up from flash will not work. The observed behavior is that, following a power up from flash, PME reports hardware configuration and logic *not equal*.
Missing *Loss of terminal block* fault	CR-6526	The IC695ALG600/608/616 analog input modules do not produce a *Loss of terminal block* fault when hardware configuration is stored or the module is hot-inserted, and the terminal block is not locked into place.
Sequence Store Failure	CR-6586 ISS176888	When downloading projects with very large hardware configuration or which use large amounts of user memory, it is possible to encounter a *PLC Sequence Store Failure* error when writing the project to flash. To work around this error, either or both of the following actions may be helpful: 1. Perform an explicit clear of flash prior to performing the write. 2. Increase the operation timeout used by PME prior to performing the write. This is done by expanding the Additional Configuration in the Inspector window for the target controller, and adjusting the Request Timeout. The timeout may need to be increased to as much as 60000 ms, depending on the amount of memory used and the condition of the flash memory.
IC695ALG600 Lead Resistance Compensation setting	CR-6689	A configuration store operation will fail if a channel is configured for 3-wire RTD and Lead Resistance Compensation is set to Disabled. A Loss of Module fault will be logged in the I/O Fault table at the end of the store operation. To recover the lost module, the configuration must be changed to enable Lead Resistance Compensation and module must be power cycled.
C Toolkit PlcMemCopy Documentation Incorrect	CR-7082	This routine does allow the destination and source pointers to be outside of reference memory. If the destination points to discrete reference memory, overrides and transitions will be honored. Note that the header for PlcMemCopy has been updated in Release 3.50 of the C toolkit.
Logic and HWC not equal after power cycle	ISS168431	If the Hardware Config from Target 1, with Logic/Configuration Power-up Source and Data Source both set to *Always from Flash*, is stored in Flash, then Logic and Hardware Config from Target 2, with Logic/Configuration Power-up Source both set to *Always from RAM*, are stored to RAM and there is a good battery, then when power is cycled the programmer may show that Logic and Hardware Config are not equal. The remedy is to clear Flash and re-store the Logic and Hardware Config from Target 2.
Multiple Log Events	CR-2014	The Ethernet Interface sometimes generates multiple exception log events and PLC Fault Table entries when a single error condition occurs. Under repetitive error conditions, the exception log and/or PLC Fault Table can be completely filled with repetitive error messages.
Spurious Ethernet Fault	CR-4104	In rare instances, after power cycle, the Ethernet Interface may log the following fault, Event = 28H, Entry 2 = 000eH. This fault can be safely ignored.
Clear of large hardware configurations may cause log event 08/20	CR-6577	A Log event 08/20 may occur when very large hardware configurations are cleared and transfers are active on other Server connections. This log event can be safely ignored.

Subject	ID code	Description
PLC response timeout errors (8/08) in Ethernet exception log under extremely heavy SRTP traffic	ISS010006	Under extremely heavy SRTP traffic conditions, the Ethernet Interface may log an event in the Ethernet exception log (Event 8, Entry 2 = 08H) indicating an overload condition. This error terminates the SRTP connection. If this event appears, either the traffic load should be reduced, or the application should use an alternate communications method to verify that critical data transfers were not lost due to the overload.
SRTP channel transfers may take up to 20 seconds after power cycle	ISS155214	When SRTP communications are interrupted by a power cycle, the Ethernet interface may require up to 20 seconds to reestablish TCP connection used for SRTP communications.
Intermittent Ethernet log event 8H/15H after power cycle	ISS163056	When starting after a power cycle, the Ethernet Interface may intermittently log an exception (entry 8H, Entry 2 = 15H, Entry 3 = 0000H, Entry 4 = 00aaH). This exception is benign and may be ignored.
RDSD upload / unintended OEM protection lock	ISS182099	When an OEM key is set in a controller, and the controller is unlocked, if an RDSD upload is performed, in rare occasions OEM protection will be unintentionally locked after the upload completes. To recover, enter OEM password to unlock the project, then clear the user memory and flash memory.

Operational Notes

Subject	Description
Default IP Addresses for CPE330 Embedded Ethernet	Initial Ethernet communication with the CPE330 may be accomplished using the default IP Addresses programmed at the factory: **LAN1 (Top Ethernet Port)** / **LAN2 (Bottom Two Ethernet Ports)** **IP Address:** 192.168.0.100 / 10.10.0.100 **Subnet Mask:** 255.255.255.0 / 255.255.255.0 **Gateway:** 0.0.0.0 / 0.0.0.0
Connecting to CPE330 Embedded Ethernet when IP Addresses are not Known	If the IP Addresses of the CPE330 embedded LAN1 and LAN2 Ethernet interfaces are not known, communication may be established using these methods to set new IP Addresses: • Set a temporary IP Address using the *Set Temporary IP Address* utility in Proficy Machine Edition. (PME) After setting the temporary address, connect to the CPE330 using PME and download a new hardware configuration with the desired permanent IP Addresses. (The IP Address set by the *Set Temporary IP Address* utility is temporary and is reset to match the stored configuration after a power cycle. After using the utility, a permanent IP Address must be set by storing a hardware configuration.) • Connect to the CPE330 with PME using an IC695ETM001 module with a known IP Address. Download a new hardware configuration with the desired IP Addresses for the CPE330 embedded Ethernet interfaces.
***Set Temporary IP Address* Utility Limitations**	These limitations apply when using the *Set Temporary IP Address* utility in Proficy Machine Edition (PME) with the CPE330. Refer to PME's help for a complete list of limitations: • The Set IP utility supports communication through network switches and hubs. Communication through routers is not supported. • The current user logged on the development computer must have full administrator privileges and PME must be run as an administrator. • The target controller must be located on the development computer's local subnet, as specified by the computer's subnet mask and the IP address of the computer and controller. • The Set IP utility does not always work on Windows 7 SP1. Refer to PME's help for possible work-arounds. • The Set IP utility is not compatible with USB to Ethernet adapters.
Ethernet Event Log Not Preserved Across Power Cycle	The CPE330 Ethernet event log for its embedded Ethernet interfaces is not maintained across a power-cycle. Ethernet log events will be reported in the PLC Fault Table as with other RX3i CPUs. The PLC Fault Table entries will be preserved if an energy pack is attached.
Station Manager Commands	The embedded Ethernet interfaces of the CPE330 support a subset of Station Manager Commands (monitor only commands). Refer to *PACSystems TCP/IP Ethernet Communications Station Manager Manual,* GFK-2225, for details.
Programmer Display of Module Information	The functionality to display module status in Proficy™ Machine Edition Logic Developer will show *5CPE330A* when the CPE330 is configured as a CPU320.

Subject	Description
RDSD / Programmer Interaction	When using RDSD, all Proficy™ Machine Edition Logic Developer PLC connections must be in the *Offline* state for the RDSD to function properly.
RDSD OEM / Password Protection of Former Uploads Incorrectly Maintained	When deleting an OEM key from a project, you must remove the Energy Pack and cycle power before writing to the RDSD. If this procedure is not followed there are rare occasions where the OEM key that had been deleted may be restored on the RDSD device and therefore could be unexpectedly downloaded to the CPU on a subsequent RDSD download.
Extra Option Module Fault after Downloading CPU320 Configuration to CPE330	An *Extra Option Module* fault is logged in the Controller Fault Table after downloading a CPU320 configuration to a CPE330. This indicates that the Embedded Ethernet interface did not receive a configuration. This fault is expected and does not interfere with normal controller operation.
CPE330 Power-up Time	The CPE330 requires more time to power up than the CPU320: • When an IC695ACC402 Energy Pack is not connected, the CPE330 requires approximately 30 seconds to complete power-up. The CPU OK, RUN, and OUT EN LEDs remain off for up to 30 seconds after power is applied. • When an energy pack is connected, the CPE330 requires up to 90 seconds to complete power up. The power up sequence of the CPE330 begins after the energy pack is fully charged. Charging may require up to 60 seconds depending on the capacitor pack's initial charge. (The energy pack's STAT LED blinks green while it is charging and turns solid green when charging is complete.)
Hot swap of Cap Pack during firmware update results in RXi controller fatal indication (i.e., blink code)	Insertion or removal of the Energy Pack Cap Pack during an Energy Pack firmware update will cause the CPE330 to become non-responsive. In order to recover from this condition user must cycle power to the CPE330. The CPE330 controller will enter a fatal blink trap with code 0x2825.
Insertion of Cap Pack during controller power-up could cause failed battery fault	If the Energy Pack is powered on without a Cap Pack and a Cap Pack is then inserted during power-up of the CPE330, the CPE330 could log a failed battery fault. The CPE330 expects the Energy Pack to report fully charged within a certain amount of time. This time limit may not be met if the Cap Pack is absent at power up.
Avoid Overlapping IP Subnets when Configuring CPE330 IP Address and Subnet Mask	The CPE330 contains two LAN interfaces, each one supporting a unique IP Address. Care must be taken when assigning IP Addresses and subnet masks to each LAN so that an overlapping IP subnet is not created. Intermittent or no Ethernet communication may result if an overlapping IP subnet is created and the two interfaces are NOT connected (cabled) to the same physical network. By default PME prohibits configuring both LAN interfaces on an overlapping IP subnet. (This may be changed by going to Controller General Options and changing the *CPE330 – LAN1, LAN2 On Same Subnet* to *Show as Warning*.)

Subject	Description
Avoid Overlapping Remote IP Networks when Configuring CPE330 IP Address and Subnet Mask	The CPE330 network interface behaves like a single ETM001 with two LANs / IP Addresses. (It is a multi-homed device.) Care must be taken when assigning IP Addresses and subnet masks to each LAN so that each network does not overlap any remote subnets in the network infrastructure. Intermittent or no Ethernet communication may result if the local networks on the CPE330 overlap a remote subnet.
CPE330 Ethernet Gateway Operation	The CPE330 allows configuration of an Ethernet gateway on both LAN1 and LAN2. Since the CPE330 contains two LAN interfaces, each one supporting a unique IP Address, only one gateway is active at a time: • If a gateway is configured on only one of the two LAN interfaces and the other is not configured (0.0.0.0) then, the single gateway is shared by both interfaces. • If a gateway is configured on both LAN interfaces, then the LAN1 gateway is given priority over the LAN2 gateway as long as LAN1 is functional. If, for example, the LAN1 cable is disconnected then the CPE330 will use the LAN2 gateway as a backup.
LAN1 and LAN2 LED Network Speed Indicators	The LAN1 and LAN2 network speed indication LEDs embedded in the RJ-45 Ethernet ports of the CPE330 use different colors to indicate 1 Gbps data rate. The LAN1 LED is Amber to indicate a data rate of 1 Gbps; the LAN2 LED is Green.
CPE330 Embedded Ethernet Protocols & Performance	The CPE330 has two independent Ethernet LANs with three auto-negotiating, full-duplex 10/100/1000 Ethernet Ports which allow support of two IP Addresses and the following protocols: • OPC UA Server with support for up to 5 sessions, 7 subscriptions per session, and up to 12,500 variables • SRTP Server with support for up to 48 simultaneous connections • Modbus/TCP Server with support for up to 16 simultaneous server connections • SRTP and Modbus/TCP Client with support for up to 32 clients; each may be SRTP or Modbus/TCP Embedded Ethernet communication is managed by a dedicated processor core. Applications using Ethernet communication should be validated to ensure adequate throughput is available to meet the needs of the application. Additional IC695ETM001 Ethernet modules may be added to the system if additional throughput is required.

The following apply generically to any RX3i CPU:

Subject	Description
SRTP or Modbus Channel COMMREQ Error Response with Gateway	SRTP & Modbus TCP Channel commands on RX3i CPUs with embedded Ethernet (IC695CPE3xx) and the IC695ETM001 RX3i Ethernet module provide different COMMREQ error codes whenever a request is sent to an unreachable server. When an Ethernet gateway is configured, the COMMREQ returns error code 0290H; when a gateway is not configured, the COMMREQ returns error code AA90H.
Cannot Clear Controller Passwords Loaded in Flash	WARNING: Passwords loaded to Flash (including OEM Password) cannot be cleared using clear Flash or by downloading new firmware. Users MUST document the password as it is not possible for the user to restore a unit to the default, no passwords condition (NULL).
OEM Protection not enforced on power-up from User Flash unless engaged before power cycle.	The OEM Protection Lock must be explicitly set before power down in order to ensure the OEM lock will be set on power-up regardless of the type of security being used.
When passwords are set with Enhanced Security, connecting with PME or establishing SRTP connections can cause a temporary increase in sweep times.	Due to the complex math involved with Enhanced Security authentication, creating SRTP connections and changing privilege levels will take additional sweep time (several milliseconds) not required when passwords are set with legacy security. If consistent sweep time is important to the application, then it is recommended to configure the sweep mode for Constant Sweep. Alternately, Constant Window or a Normal Sweep with both Limited Backplane Window and Limited Controller Comm Windows can be configured. These sweep modes will limit the sweep impact of Enhanced Security authentication and result in authentication processing across multiple sweeps.
C Toolkit Application Compatibility	Beginning with Rel 7.00 of the C Toolkit, writes to %S memory will now fail to compile where in previous releases a compilation warning was issued. This affects use of the GE-supplied C Toolkit macros Sw(), Si(), and Sd().
RUN LED is not illuminated on the Series 90-30 power supply for an RX3i remote/expansion rack with input modules only	For firmware version 6.70 and later, the RUN LED for remote/expansion racks will reflect the current IO enable/disable state (even when there are no output modules in the expansion rack). RUN LED for remote/expansion rack with input modules only will work as follows for All versions prior to version 6.70: When a remote or expansion baseplate is used with the RX3i, the RUN LED on the Series 90-30 power supply for that baseplate is illuminated when the system is in Run mode only if the rack contains at least one output module. If the rack contains input modules only, the RUN LED is not illuminated. This is due to the way input modules are managed in the PACSystems design and does not indicate an error.
Undefined Symbols in C Blocks	In Release 5.00 or later, if an attempt is made to download a C block containing undefined symbols, the download will fail. Machine Edition will display the following message in the Feedback Zone: Error 8097: Controller Error – Controller aborted the request [0x05][0xFF] Prior to Release 5.00, C blocks containing undefined symbols could be successfully downloaded, but if they were executed the CPU would transition to Stop/Halt mode.

Subject	Description
Slot numbering, power supply placement, CPU placement and reference	1. The A/C Power-Supply (IC695PSA040) for the RX3i is a doublewide module whose connector is left justified as viewed when installed in a rack. It cannot be located in Slot 11 of a 12-slot rack nor Slot 15 of a 16-slot rack. No latch mechanism is provided for the last (right-most) slot in a rack, therefore it is not possible to place the power-supply in the second to last slot. 2. The doublewide RX3i CPUs are modules whose connector is right justified as viewed when installed in a rack. They are referenced for configuration and by user logic applications by the leftmost slot that it occupies. For example, if one of these modules has its physical connector inserted in to slot 4, which means it occupies slots 3 and 4, the CPU is referenced as being located in slot 3. The referenced location of the CPU is not determined by what slot the physical connector is located in, but rather by the left most slot occupied by the entire module. 3. Due to item #2 above, a doublewide RX3i CPU may be located in Slot 0 of a rack (physical connector in Slot 1). In addition the CPU cannot be located in Slot 11 of a 12-slot rack nor Slot 15 of a 16-slot rack, since doing so would require the physical connector to be located in the slot reserved for an expansion module. 4. When migrating a Series 90-30 CPU system to a PACSystems RX3i CPU, be aware that to maintain the Slot 1 location of the CPU, only a singlewide power-supply may be used in Slot 0. Either DC power supply can be used (IC695PSD040 or IC695PSD140). Therefore, if the application using an existing Series 90-30 system must maintain a Slot 1 CPU and uses an AC power-supply, the RX3i system must have the RX3i AC power-supply located in a slot to the right of the RX3i CPU in Slot 1. 5. In deciding to place the CPU in slots other than Slot 1, the user should be aware of the possible application migration issues that could arise. The following lists the areas that could be affected when migrating an application from one CPU slot to another.

Item Affected		How Affected
User Logic	Service Request #15 (*Read Last-Logged Fault Table Entry*)	Location of CPU faults will not be the standard 0.1 location, but will reflect the slot the CPU is located in. User logic that decodes fault table entries retrieved by these service requests may need updating.
	Service Request #20 (*Read Fault Tables*)	
	Communications Request (COMMREQ)	COMMREQs directed to the CPU (e.g. those directed to the serial ports of the CPU) will need to be updated with the correct CPU slot reference.
H/W Configuration	CPU Slot location	Slot location of the CPU must be updated in the HW Configuration to reflect the CPU's true location.
Fault Tables	Faults logged for the CPU	The location of faults logged for the CPU in the fault table will not be the standard 0.1 (rack.slot) location, but will reflect the CPU's actual slot.
External Devices	Series 90 PLCs	
	Remote Series 90 PLCs that use SRTP Channels COMMREQs expect the CPU to be in slot 1. In order to support communications with Series 90 SRTP clients such as Series 90 PLCs using SRTP Channels, the RX3i internally redirects incoming SRTP requests destined for {rack 0, slot 1} to {rack 0, slot 2}, provided that the CPU is located in rack 0 slot 2 (and the remote client has not issued an SRTP Destination service on the connection to discover the rack and slot of the CPU). This special redirection permits Series 90-30 applications that expect the power supply to be located leftmost and the CPU to be located to the right of the power supply to function. Attempts to establish channels with CPUs in slots other than 1 or 2 will fail if initiated from Series 90 PLCs.	
	HMI and External Communication Devices	
	All external communication devices that interact with the CPU should be checked for compatibility with CPU slot locations other than slot 1. Problems may arise with, but are not limited to, initial connection sequences and fault reporting. Machine Edition View customers should select *GE SRTP* as their communications driver – it can communicate with a CPU in any slot.	
	Host Communications Toolkit (HCT)	
	Applications that utilize the Host Communications Toolkit may require updated drivers.	

Subject	Description
LD-PLC operations	Machine Edition LD-PLC no longer supports a function that connects to the PLC, downloads, and then disconnects from the PLC. The connect and download functions are now separate. To perform a download to the PLC, you must first connect to the PLC.
Logic Executed in Row Major instead of Column Major	Logic execution in PACSystems RX3i is performed in row major order (similar to the Series 90-30). This is different from the Series 90-70 that executes in column major order. This means that some complicated rungs may execute slightly differently on PACSystems RX3i and Series 90-70. For specific examples, see the programming software on-line help.
NaN Handled Differently than in S90-30	The PACSystems RX3i CPU may return slightly different values for Not A Number as compared to Series 90-30 CPUs. In these exception cases (e.g., 0.0/0.0), power flow out of the function block is identical to Series 90-30 operation and the computed value is still Not A Number.
PID Algorithm Improved	The PID algorithm used in PACSystems has been improved and therefore PID will function slightly differently on PACSystems RX3i than on the Series 90-30. The differences are that the elapsed time is computed in 100 µS instead of 10 mS units. This smoothes the output characteristic, eliminating periodic adjustments that occurred when the remainder accumulated to 10mS. Also, previous non-linear behavior when the integral gain is changed from some value to 1 repeat/second was eliminated.
Some Service Requests different from 90-30 or no longer supported	• Service Requests 6, 15, and 23 have slightly different parameters. Refer to *PACSystems RX7i & RX3i CPU Programmer's Reference Manual,* GFK-2950. • PACSystems PLCs support Service Request 26/30 functionality via fault locating references. • Service Request 13 requires a valid value in the input parameter block (Refer to *PACSystems RX7i & RX3i CPU Programmer's Reference Manual,* GFK-2950 for details). On the Series 90-30 and Series 90-70 the parameter block value was ignored. • Service Requests 48 and 49 are no longer supported (there is no auto-restart) because most faults can be configured to be *not fatal*.
IL and SFC	IL and SFC are not available.
DO I/O Instruction	The Series 90-30 Enhanced DO I/O instruction is converted to a standard DO I/O instruction (the ALT parameter is discarded and ignored.)
END Instruction	The Series 90-30 END instruction is not supported. Alternate programming techniques should be used.
Non-nested JUMP, LABEL, MCR, & ENDMCR Instructions	Non-nested JUMPs, LABELs, MCRs, & ENDMCRs are translated to the corresponding nested JUMPs, LABELs, MCRs, & ENDMCRs when converting from Series 90-30 to PACSystems RX3i.
Changing IP Address of Ethernet Interface while Connected	Storing a hardware configuration with a new IP Address to the RX3i while connected via Ethernet will succeed, then immediately disconnect because the RX3i is now using a different IP Address than the Programmer. You must enter a new IP Address in the Target Properties in the Machine Edition Inspector window before reconnecting.
Timer Operation	Care should be taken when timers (ONDTR, TMR, and OFDTR) are used in program blocks that are NOT called every sweep. The timers accumulate time across calls to the sub-block unless they are reset. This means that they function like timers operating in a program with a much slower sweep than the timers in the main program block. For program blocks that are inactive for large periods of time, the timers should be programmed in such a manner as to account for this catch up feature. Related to this are timers that are skipped because of the use of the JUMP instruction. Timers that are skipped will NOT catch up and will therefore not accumulate time in the same manner as if they were executed every sweep.

Subject	Description
Constant Sweep	Constant Sweep time, when used, should be set at least 10 ms greater than the normal sweep time to avoid any over-sweep conditions when monitoring or performing on-line changes with the programmer. Window completion faults will occur if the constant sweep setting is not high enough.
Large Number of COMMREQs sent to Module in one sweep Causes Faults	A large number of COMMREQs (typically greater than 8) sent to a given board in the same sweep may cause Module Software faults to be logged in the PLC fault table. The fault group is MOD_OTHR_SOFTWR (16t, 10h) and the error code is COMMREQ_MB_FULL_START (2). When this occurs, the *FT* output of the function block will also be set. To prevent this situation, COMMREQs issued to a given board should be spread across multiple sweeps so that only a limited number (typically 8 or less) of COMMREQs are sent to a given board in each sweep. In addition, the *FT* output parameter should be checked for errors. If the *FT* output is set (meaning an error has been detected), the COMMREQ could be re-issued by the application logic.
C Block Standard Math Functions Do Not Set errno	In C Blocks, standard math functions (e.g. sqrt, pow, asin, acos) do not set errno to the correct value and do not return the correct value if an invalid input is provided.
Hot Swap	Hot Swap of power supplies or CPUs is not supported
Run Mode Store of EGD	RX3i peripheral Ethernet modules (IC695ETM001) must be running firmware version 6.00 or greater to utilize the *Run Mode Store of EGD* feature.
Proper IP Addressing is Always Essential	The PACSystems Ethernet Interface must be configured with the correct IP Address for proper operation in a TCP/IP Ethernet network. Use of incorrect IP Addresses can disrupt network operation for the PACSystems and other nodes on the network. Refer to *PACSystems RX7i & RX3i TCP/IP Ethernet Communications User Manual*, GFK-2224 for important information on IP Addressing. When storing a new HW configuration to the RX3i, be sure that the HW configuration contains the proper Ethernet addressing data (IP Address, Subnet Mask, and Gateway IP Address) for the RX3i. **Note:** Machine Edition programming software maintains the target IP Address (used to connect the programmer to the target) independent of the contents of the HW Configuration for that target). The target IP Address is set in the Target Properties in the Machine Edition Inspector window. Storing a HW Configuration whose Ethernet addressing data contains an IP Address that is different from the RX3i target IP Address will change the IP Address used by the target RX3i as soon as the Store operation is completed; this will break the Programmer connection. Before attempting to reconnect the Programmer, you must change the target IP Address in the *Target Properties* in the Machine Edition *Inspector* window to use the new IP Address. To regain communication at the former IP Address, use the manual corrective action described above. Storing a HW Configuration containing an incorrect Ethernet addressing data to the PACSystems RX3i will result in loss of the Programmer connection and will require manual corrective action as described above.
Network Architecture and Overload	The hub or switch connections in an Ethernet network must form a tree and not a ring; otherwise duplication of packets and network overload may result. In this situation, the RX3i Ethernet modules will continually reset. **Caution** The hub or switch connections in an Ethernet network must form a tree and not a ring; otherwise duplication of packets and network overload may result
Reporting of Duplicate IP Address	The PACSystems RX3i does not log an exception or a fault in the PLC Fault Table when it detects a duplicate IP Address on the network.

Subject	Description
SRTP Connections Remain Open after IP Address Changed	The Ethernet Interface does not terminate all open SRTP connections before changing its IP Address. Once the local IP Address has changed, any existing open TCP connections are unable to normally terminate. This can leave SRTP connections open until their underlying TCP connections time out.
***Send Information Report* (COMMREQ 2010) requests may fail at minimum intervals less than 200 ms from embedded Ethernet port.**	*Send Information Report* COMMREQ requests, with a minimum interval between host accesses of 200 ms or less, may fail if issued from the CPU's embedded Ethernet port. A COMMREQ Status Word value of 0290H, *Period expired before transfer completed; still waiting on transfer* indicates this condition occurred. To work around this issue, the user can set the *minimum interval between host accesses* to a value greater than 200 ms if issuing a *Send Information Report* COMMREQ from the embedded Ethernet port of the CPU.
Modbus/TCP Client Channels require at least a 10 ms delay between bulk channel close and bulk channel open processing	On CPUs with embedded Ethernet ports, a delay of at least 10 ms must occur between logic-driven attempts to close sixteen Modbus/TCP Channels simultaneously and then re-open sixteen Modbus/TCP Channels. This delay is necessary to provide external Modbus/TCP Servers sufficient time to close all channels before the Client issues channel open requests.
Lengthy CPE Backplane Operations	Some exceptionally lengthy CPE backplane operations, such as MC_CamTableSelect, Data Log, and Read Event Queue functions, will take longer to complete compared to other RX3i CPU models, and may delay backplane operations to IC695 modules. For example, when an MC_CamTableSelect function block is executed on the PMM335 module, the CPU's acknowledgement of the PMM355 module interrupt may be delayed. In this situation, you may see the following fault in the I/O Fault Table, even when the interrupt has not been dropped: Error initiating an interrupt to the CPU.
Incorrect COMMREQ Status for Invalid Program Name	The program name for PACSystems is always *LDPROG1*. When another program name is used in a COMMREQ accessing %L memory, an Invalid Block Name (05D5) error is generated.
FANUC I/O Master and Slave operation	Scansets on the master do not work properly for the first operation of the scanset after entering RUN mode. They do work properly for subsequent scans. After downloading a new hardware configuration and logic, a power cycle may be required to resume FANUC I/O operation. Use PLCs of similar performance in FANUC I/O networks. If a master or slave is located in an RX3i system, the other PLCs should be RX3is or Series 90-30 CPU374s. Repeated power up/down cycles of an expansion rack containing FANUC I/O slaves may result in failure of the slaves' operation, with the RDY LED off.
Lost count at power up for Serial IO Processor	The Serial IO Processor (IC693APU305) will lose the first count after every power up or every time the module receives a config

Subject	Description
COMMREQ Status Words Declared in Bit Memory Types must be Byte-Aligned	In previous releases, the CPU allowed configuration of COMMREQ Status Words in bit memory types on a non-byte-aligned boundary. Even though the given reference was not byte-aligned, the firmware would adjust it the next-lowest byte boundary before updating status bits, overwriting the bits between the alignment boundary and specified location. To ensure that the application operates as expected, release 3.50 requires configuration of COMMREQ Status Words in bit memory types to be byte-aligned. For example if the user specified status bit location of %I3, the CPU aligns the status bit location at %I1. Release 3.50 firmware requires the user to specify the appropriate aligned address (%I1) to ensure that the utilized location is appropriate for their application. Note that the actual reference location utilized is not changed, but now is explicitly stated for the user.
STOP and RUN Mode Transition Priority	The PACSystems CPU receives requests to change between stop and run mode from many different sources. These include (but are not limited to) Proficy Machine Edition, HMIs, the user application, and the RUN/STOP switch. Since there are many potential sources for a mode change request, it is possible to receive a new mode change request while another is already in progress. When this scenario occurs, the CPU evaluates the priority of the new mode change request with the mode change that is in progress. If the new mode change request has an equal or higher priority than the one already in progress, the CPU transitions to the new mode instead of the one in progress. If, however, the new mode change request has a lower priority than the one in progress, the new mode request is discarded and the CPU completes the mode change that is in progress. The sweep mode priorities are (listed from highest to lowest priority) STOP HALT, STOP FAULT, STOP, and RUN. (NOTE: The IO ENABLED/DISABLED state is not part of the mode priority evaluation.) For example, a CPU is in RUN IO ENABLED mode and a Service request 13 function block is executed to place the CPU into STOP IO DISABLED mode. Before the transition to STOP IO DISABLED is completed, the RUN/STOP switch is changed from RUN IO ENABLED to RUN IO DISABLED. In this case, the CPU ignores the new request from the RUN/STOP switch to go to RUN IO DISABLED mode because it is already processing a request to go to STOP IO DISABLED mode and STOP mode has a higher priority than RUN mode.
Suspend IO Function Block does not Suspend EGD	In a S90-70 the SUSPEND_IO function block suspends EGD in addition to IO Scan. In PACSystems controllers the SUSPEND IO only suspends IO Scan.
Nuisance Faults Sometimes Logged for Missing Power Supply	If a power supply is missing or has some fault that makes it appear to be missing, the CPU may improperly report (upon download of configuration) more than one fault. Such additional faults may be safely ignored and will not occur in a properly configured rack (with no mismatches or missing modules),
Uploaded Controller Supplemental Files lose date and time	Controller Supplemental Files uploaded from the CPU are time stamped as 8/1/1980 12:08AM regardless of PC or PLC time.

Product Documentation

PACSystems RX3i 1GHz 64MB CPU w/Ethernet IC695CPE330 Quick Start Guide	GFK-2941A
PACSystems RX7i & RX3i CPU Reference Manual	GFK-2222V[3]
PACSystems RX7i & RX3i CPU Programmer's Reference Manual	GFK-2950
PACSystems RX3i System Manual	GFK-2314G[3]
PACSystems RX3i PROFINET IO Controller User Manual	GFK-2571E
PACSystems RXi, RX3i, and RX7i Controller Secure Deployment Guide	GFK-2830B
PACSystems RX7i & RX3i TCP/IP Ethernet Communications User Manual	GFK-2224P[3]
PACSystems TCP/IP Ethernet Communications Station Manager Manual	GFK-2225M[3]
PACSystems HART Pass Through User Manual	GFK-2929

User manuals, product updates and other information sources are available on the GE Intelligent Platforms Support website, http://www.ge-ip.com/support, under *Controllers and IO, RX3i Controllers*.

[3] Will be updated to include CPE330 shortly after initial product launch.

SLC40 Series — Panel Mounted Annunciators

SLC40 Series Annunciators

SLC series panel mounted annunciators are an ideal alternative to mounting multiple pilot devices.
Cluster mounting simplifies panel cutouts and offers a variety of window combination sizes.
Available with incandescent or Superbright LED illumination.

Key features of the SLC40 series include:

- **Custom configuration up to 105 windows**
- **Four window sizes based on a 40mm grid**
- **Non-reflective clear lenses that can be extended (angled) for better visibiltiy when mounted in higher locations**
- **Incandescent or Superbright LED illumination**
- **Wide variety of input voltage**

C

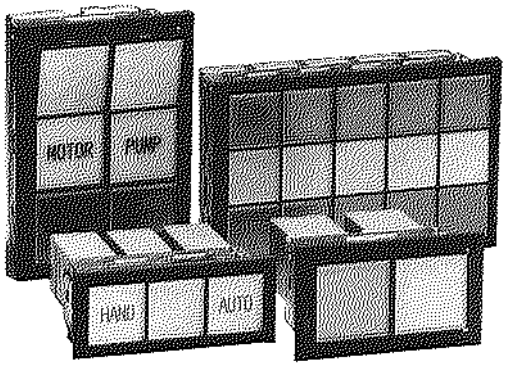

TÜV PRODUCT SERVICE Cert. No. B970213332375

UL Recognized File No. E69861

ABS American Bureau of Shipping

CSA Certified File No. LR48366-24

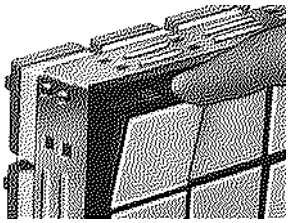
Extended Windows

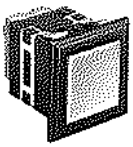
Style F

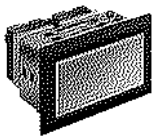
Style H

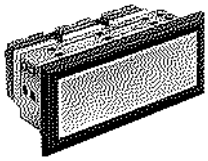
Style L

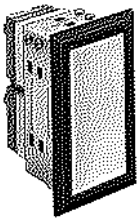
Style V

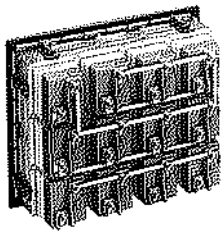
Staggered Terminals: increased safety and serviceability

C

Specifications

Light Source		LED	Incandescent
Voltages	Full Voltage	6, 12, 24V AC/DC	6.3, 18, 24, 30V AC/DC
	Transformer	120, 240V AC	120, 240V AC
	DC-DC Converter	110V DC	—
Colors		Full voltage: Amber, Green, Red, Yellow, Blue (24V), White, dual color Red/Green (24V only)	Amber, Green, Red, Yellow, Blue, White
Lamp Type		Surface (chip type) LED cluster (40mA approximately)	E12/15 (2W) screw base
Available Window Sizes		40x40mm, 40x80mm, 40x120mm, 80x40mm	
Insulation Resistance		100MΩ minimum (with 500V DC megger), between live and dead parts	
Degree of Protection		IP20 (for indoor use only), NEMA 1	
Dielectric. Strength		Full voltage: 2,000V AC direct Adaptor/transfomer 2,500V AC (1 minute)	
Operating Temperature		– 20˚ to +40˚C; (45-85% relative humidity)	
Material of Marking Plate and Color Screen		Polycarbonate	
Termination		X1 and X2 terminals: M3.5 screw with a captive wire clamp washer (Check terminal: M3 screw, or applicable models)	
Maximum Size		Full voltage: 7 rows, 15 columns (105 windows) Others: 50 windows maximum	
Recommended Wire Size		22-14 AWG x2 ($2mm^2$ x 2)	
Approvals		TÜV PRODUCT SERVICE Cert. No. B970213332375 UL Recognized File No. E69861 ABS American Bureau of Shipping CSA Certified File No. LR48366-24	

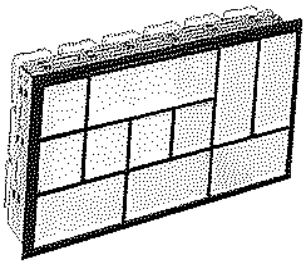

Part Numbers (assembled)

Part Number Guide

	①	②		③	④	⑤		⑥
SLC40N –	01	02	–	DD	2	F	B –	A(3)
	Number of Rows	Number of Columns		Type	Voltage	Style		Color and Number of Windows

Part Numbers: Assembled Parts

C

Description			Code	Remark
① Number of Rows			01, 02, 03, 04, 05, 06, 07	7 row maximum (number of base unit "F-Style" windows)
② Number of Columns			01, 02, 03, 04, 05, 06, 07, 08, 09, 10 11, 12, 13, 14, 15	15 column maximum (number of base unit windows)
③ Type	LED	Full voltage	DD	6V, 12V, 24V
		Full voltage with check terminal	DHM	24V only
		Full voltage 2 color (Red/Green)	DW	24V only
		Transformer	TD	120V, 240V AC
		DC-DC converter	CD	110V DC only
	Incandescent	Full voltage	DE	6.3V, 18V, 24V, 30V
		Full voltage with check terminal	DEM	6.3V, 18V, 24V, 30V
		Transformer	TE	120V, 240V
④ Voltage	110V DC		1	Type CD only
	24V DC		2	Type DD, DHM, DW, DE, or DEM
	30V AC/DC		3	Type DE or DEM
	6.3V (6V) AC/DC		6	Type DD, DE, or DEM
	18V AC/DC		8	Type DE or DEM
	120V AC/DC		12	Type TD or TE
	240V AC/DC		24	Type TD or TE
	No lamp		99	Type DE or DEM
⑤ Style	Square		F	40x40mm
	Horizontal rectangle		H	40x80mm
	Large horizontal rectangle		L	40x120mm
	Vertical rectangle		V	80x40mm
	Combination		M	Fill out the order form on the next page
⑥ Color and Number of Windows	Amber		A	After each color, specify the number of windows Example... A(3), G(2), R(1)
	Green		G	
	Red		R	
	Blue		S (LED version: 24V only)	
	White		W	
	Yellow		Y	

1. *Secondary volatage on AC adaptors and DC-DC converters is 24V.*
2. *To specify the arrangement of varying window sizes and colors, use the order form on the next page.*
3. *Drawings are required for any units ordered with engraving.*
4. *Incandescents use color screen and marking plate, LEDs use two marking plates (no color screen)*

Dimensions

Panel Cut-Out Dimensions

No. of Columns →			1	2	3	4	5	6	7	8	9	10	11	12	13	14	15
↓ No. of Rows	Overall Panel Width Dimension →		2.205" (56mm)	3.780" (96mm)	5.354" (136mm)	6.929" (176mm)	8.504" (216mm)	10.079" (256mm)	11.654" (296mm)	13.228" (336mm)	14.804" (376mm)	16.378" (416mm)	17.953" (456mm)	19.528" (496mm)	21.102" (536mm)	22.677" (576mm)	24.252" (616mm)
	Overall Height ↓	Cut-out Ht ↓ / Cut-out Wd →	1.772" (45mm)	3.346" (85mm)	4.921" (125mm)	6.496" (165mm)	8.071" (205mm)	9.646" (245mm)	11.220" (285mm)	12.795" (325mm)	14.370" (365mm)	15.945" (405mm)	17.520" (445mm)	19.094" (485mm)	20.669" (525mm)	22.244" (565mm)	23.819" (605mm)
1	2.205" (56mm)	1.772" (45mm)	1	2	3	4	5	6	7	8	9	10	11	12	13	14	15
2	3.780" (96mm)	3.346" (85mm)	2	4	6	8	10	12	14	16	18	20	22	24	26	28	30
3	5.354" (136mm)	4.921" (125mm)	3	6	9	12	15	18	21	24	27	30	33	36	39	42	45
4	6.929" (176mm)	6.496" (165mm)	4	8	12	16	20	24	28	32	36	40	44	48	52	56	60
5	8.504" (216mm)	8.071" (205mm)	5	10	15	20	25	30	35	40	45	50	55	60	65	70	75
6	10.079" (256mm)	9.646" (245mm)	6	12	18	24	30	36	42	48	54	60	66	72	78	84	90
7	11.654" (296mm)	11.220" (285mm)	7	14	21	28	35	42	49	56	63	70	77	84	91	98	105
			Total Number of Windows (equivalent to style F—basic unit size)														

1. *The number of rows and columns refers to styles equivalent to style F (basic unit size).*
   For styles H, L, and V, convert into style F (basic unit size) equivalents.
   Style H: 1 window high (1 row) x 2 windows wide (2 columns)
   Style V: 2 windows high (2 rows) x 1 window wide (1 column)
   Style L: 1 window high (1 row) x 3 windows wide (3 columns)
   Example: 18 windows = 3 windows high (3 rows) x 6 windows wide (6 columns) →
   Overall dimension (H x W): 5.354" x 10.079" (136 x 256mm)
   Panel cut-out (H x W): 4.921" x 9.646" (125 x 245mm)
   Tolerance: +0.039" (1mm), –0
2. *See page B–28 for part numbering information.*

Window Style		Style F	Style H	Style L	Style V
Appearance			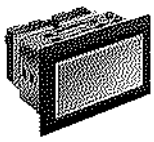	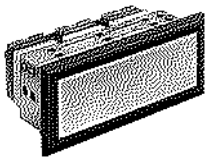	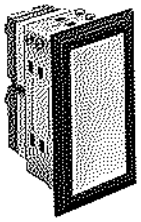
Widow Size	Illumination Face (H x W)	1.575" x 1.575" (40 x 40mm)	1.575" x 3.150" (40 x 80mm)	1.575" x 4.724" (40 x 120mm)	3.150" x 1.575" (80 x 40mm)
	Lens (H x W)	1.457" x 1.457" (37 x 37mm)	1.457" x 3.031" (37 x 77mm)	1.457" x 4.606" (37 x 117mm)	3.031" x 1.457" (77 x 37mm)
	Marking Plate (H x W x t)	1.409" x 1.409" x 0.04" (35.8 x 35.8 x 1.0mm)	1.409" x 2.984" x 0.04" (35.8 x 75.8 x 1.0mm)	1.409" x 4.559" x 0.04" (35.8 x 115.8 x 1.0mm)	2.984" x 1.409" x 0.04" (75.8 x 35.8 x 1.0mm)
	Color Screen (H x W x t)	1.409" x 1.409" x 0.04" (35.8 x 35.8 x 1.0mm)	1.409" x 2.984" x 0.04" (35.8 x 75.8 x 1.0mm)	1.409" x 4.559" x 0.04" (35.8 x 115.8 x 1.0mm)	2.984" x 1.409" x 0.04" (75.8 x 35.8 x 1.0mm)
	Engraving Area	1.339" x 1.339" (34 x 34mm)	1.339" x 2.913" (34 x 55mm)	1.339" x 4.488" (34 x 85mm)	2.913" x 1.339" (55 x 34mm)

C

Dimensions, continued

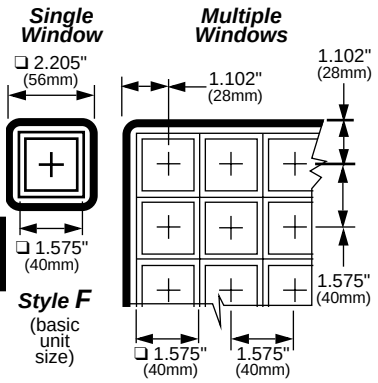

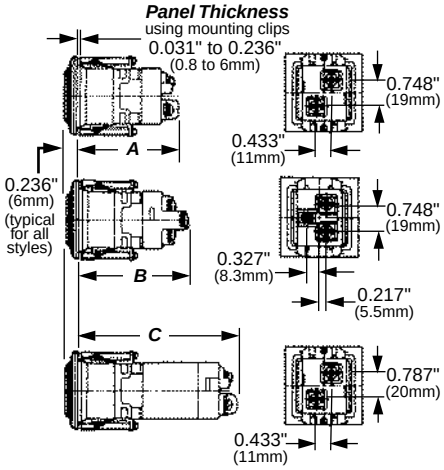

Styles F, H, L, V:
Single Window (right)
Multiple Windows (below)

	Description	LED	Incandescent
A	Full voltage	2.618" (66.5mm)	2.539" (64.5mm)
B	Full voltage LED 2-color alternate	2.874" (73mm)	—
C	AC adaptor	3.327" (84.5mm)	—
	DC-DC converter	3.327" (84.5mm)	—
	Transformer	—	2.854" (72.5mm)
Terminals (X1, X2)		M3.5 screw	
Check terminal (C)		M3 screw	
Same terminals, adjacent windows		1.575" (40mm) centers	

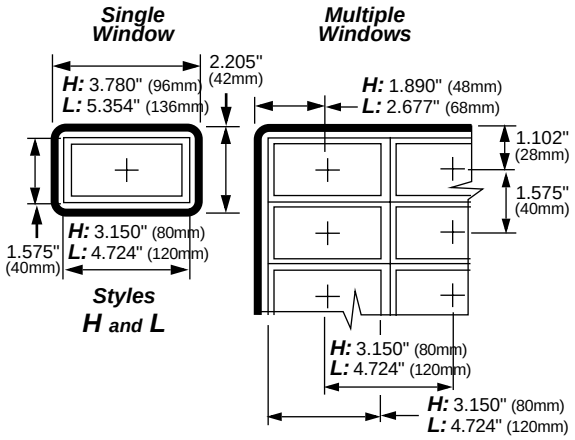

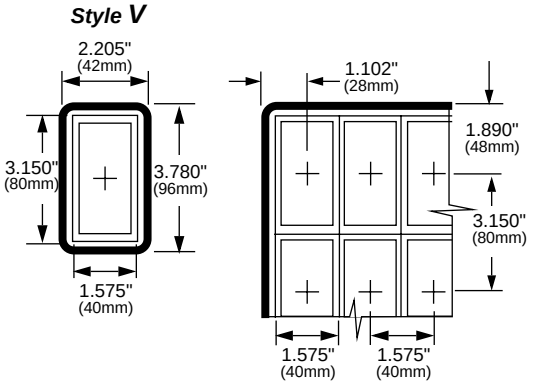

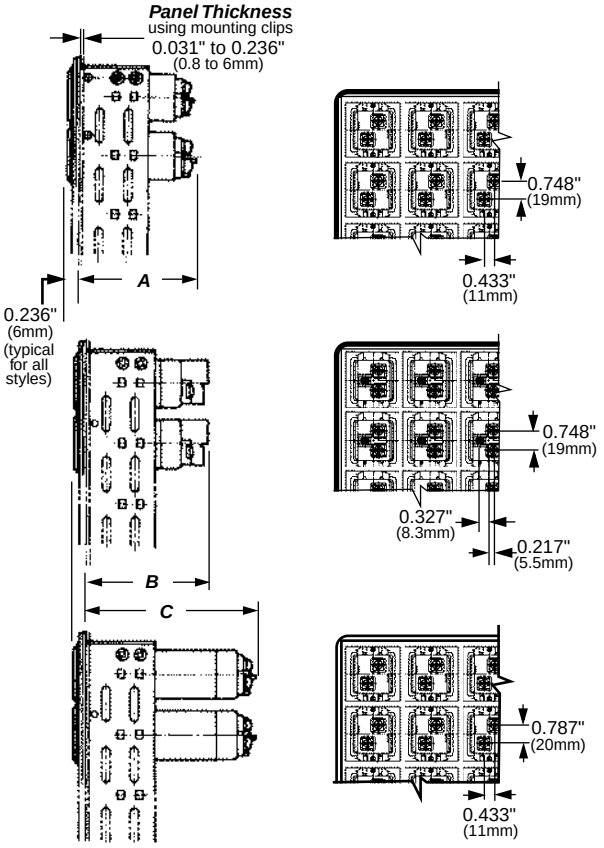

SLC Series Accessories

Description		Application		Part No.	Remarks	
Lenses	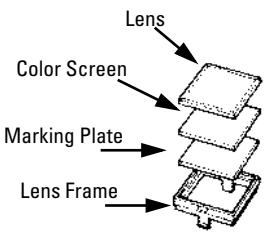	SLC30 incandescent, LED	F	SLC-3LF-(UL)	A lens is included with each window on assembled units	
			H and V	SLC-3LH-(UL)		
		SLC40 incandescent, LED	F	SLC-4LF-(UL)		
			H and V	SLC-4LH-(UL)		
Color Screens		SLC30 incandescent	F	SLC-3PF-*-(UL)	Specify color code in place of asterisk (*): A = Amber C = Transparent G = Green (incandescent) R = Red S = Blue W = White Y = Yellow	A color screen and marking plate are included with each window of assembled incandescent units Two marking plates are included with each window of assembled LED units; LED units do not use color screens
			H and V	SLC-3PH-*-(UL)		
		SLC40 incandescent	F	SLC-4PF-*-(UL)		
			H and V	SLC-4PH-*-(UL)		
Marking Plates		SLC30 incandescent, LED	F	SLC-3PF-■-(UL)	Specify color code in place of square (■): C = Transparent (LED) W = White (incandescent) WL = White (LED)	
			H and V	SLC-3PH-■-(UL)		
		SLC40 incandescent, LED	F	SLC-4PF-■-(UL)		
			H and V	SLC-4PH-■-(UL)		
Lens Frames		SLC30 incandescent only	F	SLC-3WF-B	A lens frame is included with each window on assembled units	
			H	SLC-3WH-B		
			V	SLC-3WV-B		
		SLC30 LED only	F	SLC-3WF-BL		
			H	SLC-3WH-BL		
			V	SLC-3WV-BL		
		SLC40 incandescent only	F	SLC-4WF-B		
			H	SLC-4WH-B		
			V	SLC-4WV-B		
		SLC40 LED only	F	SLC-4WF-BL		
			H	SLC-4WH-BL		
Incan-descent Lamps	BA9S/13 (1W) 	SLC30 incandescent only	BA9S/13 lamp base	IS-6	6.3V, 1W; operating voltage: 5 to 6V AC/DC	Unless “no lamp” (99) is specified, a lamp is included with each style F window equivalent One part number is specified for one replacement bulb
				IS-12	12V, 1W; operating voltage: 9 to 12V AC/DC	
				IS-24	24V, 1W; operating voltage: 18 to 24V AC/DC	
				IS-30	30V, 1W; operating voltage: 24 to 30V AC /DC	
	E12/15 (2W) 	SLC40 incandescent only	2W E12/15 lamp base	LE-6	6.3V, 2W; operating voltage: 5 to 6V AC/DC	
				LE-8	18V, 2W; operating voltage: 12 to 18V AC/DC	
				LE-2	24V, 2W; operating voltage: 18 to 24V AC/DC	
				LE-3	30V, 2W; operating voltage: 24 to 30V AC/DC	

C

LED Lamps		SLC30 LED only 1-color	6V AC/DC	SLC-6SP*	Specify color code in place of asterisk (*): A = Amber G = Green R = Red S = Blue (available in 24V version only) W = White Y = Yellow
			12V AC/DC	SLC-1SP*	
			24V AC/DC	SLC-2SP*	
		SLC30 LED only 2-color: Red/Green	24V AC/DC	SLC-2SP-R/G	
		SLC40 LED only 1-color	6V AC/DC	SLC-6EP*	
			12V AC/DC	SLC-1EP*	
			24V AC/DC	SLC-2EP*	
		SLC40 LED only 2-color: Red/Green	24V AC/DC	SLC-2EP-R/G	

Description	Application		Part No.	Remarks	
Lamp Holder Tool	SLC30 and SLC40 incandescent		OR-55	Rubber tool eases the removal of incandescent lamps	
Tab Terminal Adaptors	Used for wiring quick-connect terminals		TW-FA1	#250 tab terminal (W x H): 0.250" x 0.031" (6.35 x 0.8mm) single tab	
			TW-FA2	#110 tab terminal (W x H): 0.110" x 0.031" (2.8 x 0.8mm) double tab	
			TW-FA3	#187 tab terminal (W x H): 0.187" x 0.020" (4.75 x 0.5mm) single tab	
Jumpers	SLC30	X1 terminal (spade)	SLC-JP30	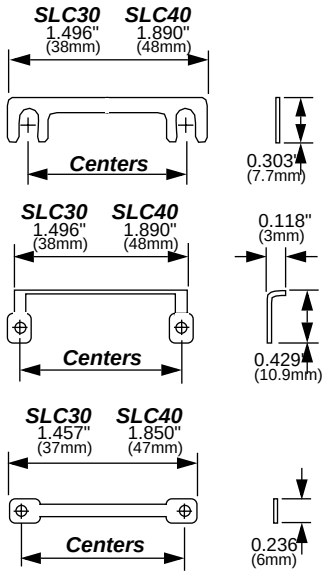	Total number of jumpers equals total number of style F window equivalents Thickness = 0.020" (0.5mm) Centers: SLC30 = 1.181" (30mm) SLC40 = 1.575" (40mm) ± 0.004" (0.1mm)
		X2 terminal (ring)	SLC-JP33		
		C terminal (ring)	SLC-JP32		
	SLC40	X1 terminal (spade)	SLC-JP40		
		X2 terminal (ring)	SLC-JP41		
		C terminal (ring)	SLC-JP42		
Mounting Clip	All SLCs		SLC-3K1	Mounting clips are included with the panel (see page B–40 for details about quantity and placement).	
Marking Strip			BNM2	White glossy paper with adhesive back (the dimensions are given below); the marking strip can be stuck to the terminal transformer or directly to the units for identification of the unit or circuit number; Sticker dimension (W x L): 0.197" x 393.701" (5 x 10,000mm)	
Terminal Covers	Use with all SLC30 windows		SLC30-VL3		
	Use with SLC40 windows		HW-VL3		
	Use with SLC40 with check terminal		SLC40-VL5		

C

SLC Series Accessories, continued

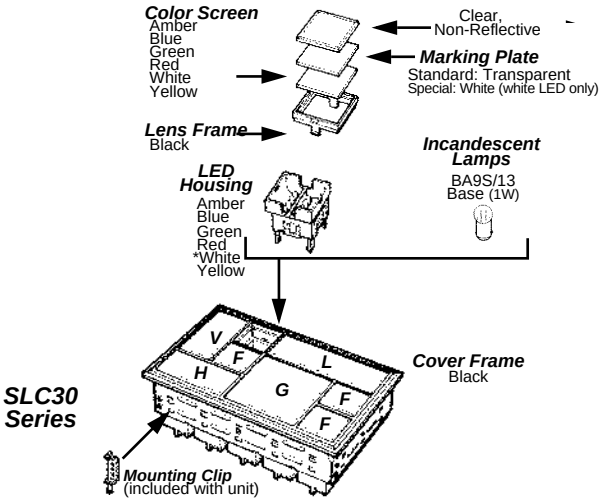

C

Instrument Transformers, Inc.

a division of GE Multilin

Current Transformer
Model 120
Window Diameter 5.75”

REGULATORY AGENCY APPROVALS

E93779 LR89403

Manufactured to meet the requirements of ANSI/IEEE C57.13.
Classified by U.L. in accordance with IEC 44-1

APPLICATION:
Relaying and metering.

FREQUENCY:
50-400 Hz.

INSULATION LEVEL:
600 Volts, 10 kV BIL full wave.

Terminals are brass studs No. 8-32 with one flatwasher, lockwasher and regular nut.

Order mounting bracket kit 0221B00185 separately.

Multi-ratios available upon request.

Approximate weight 11 lbs.

CATALOG NUMBER	CURRENT RATIO	RELAY CLASS	ANSI METERING CLASS AT 60HZ					SECONDARY WINDING RESISTANCE	CONTINUOUS THERMAL RATING FACTOR	
			B0.1	B0.2	B0.5	B0.9	B1.8	(OHMS @ 75°C)	@ 30°C	@ 55°C
120—201	200:5	—	1.2	1.2	2.4	4.8	4.8	0.053	2.0	2.0
120—301	300:5 *	C10	0.3	0.6	1.2	2.4	2.4	0.063	2.0	2.0
120—401	400:5 *	C10	0.3	0.3	0.6	1.2	2.4	0.080	2.0	2.0
120—501	500:5 *	C20	0.3	0.3	0.6	0.6	1.2	0.137	2.0	2.0
120—601	600:5 *	C20	0.3	0.3	0.3	0.6	0.6	0.165	2.0	2.0
120—801	800:5 *	C20	0.3	0.3	0.3	0.3	0.6	0.220	2.0	1.5
120—102	1000:5 *	C20	0.3	0.3	0.3	0.3	0.6	0.309	1.5	1.5
120—122	1200:5 *	C50	0.3	0.3	0.3	0.3	0.3	0.371	1.5	1.33
120—152	1500:5 *	C50	0.3	0.3	0.3	0.3	0.3	0.464	1.5	1.0
120—162	1600:5 *	C50	0.3	0.3	0.3	0.3	0.3	0.494	1.33	1.0
120—202	2000:5 *	C50	0.3	0.3	0.3	0.3	0.3	0.592	1.33	1.0
120—252	2500:5 *	C50	0.3	0.3	0.3	0.3	0.3	0.740	1.0	0.8
120—302	3000:5 *	C50	0.3	0.3	0.3	0.3	0.3	0.888	1.0	0.8
120—352	3500:5	C20	0.3	0.3	0.3	0.3	0.3	0.964	1.0	0.8
120—402	4000:5 *	C50	0.3	0.3	0.3	0.3	0.3	1.102	1.0	0.8

Approved for revenue metering by Industry Canada No. T-154

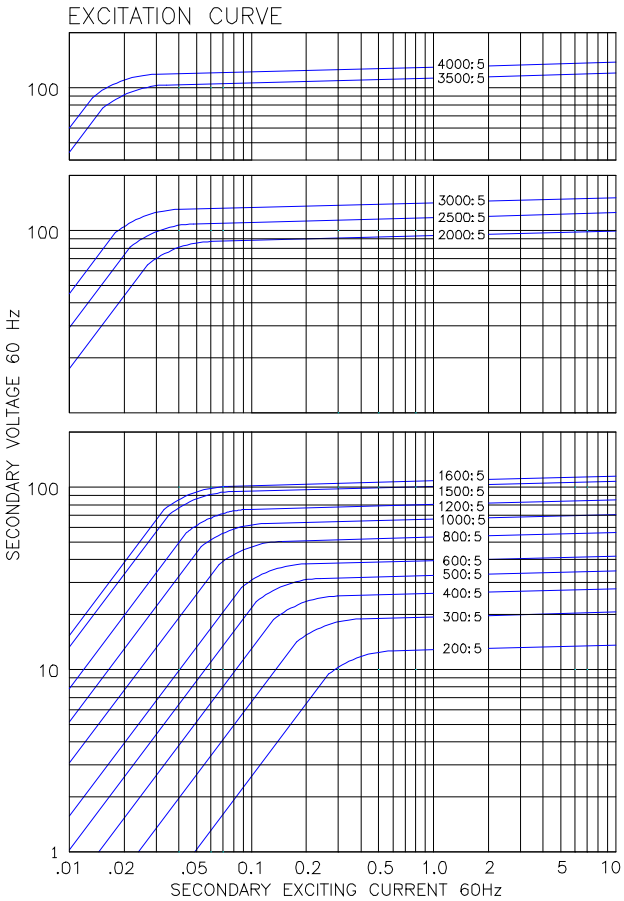

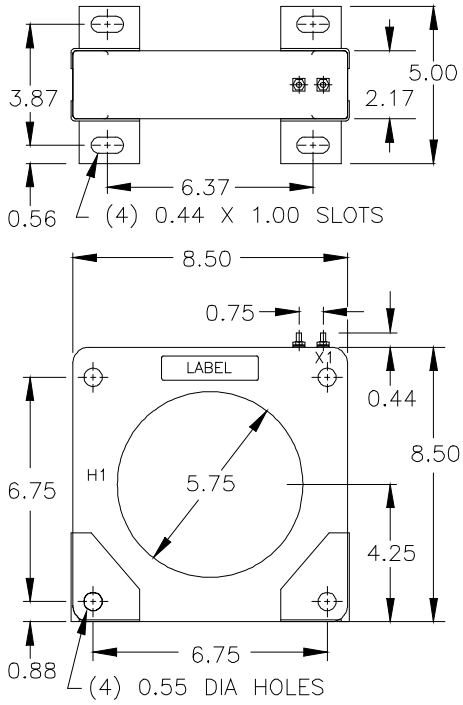

USA, Canada, Asia, Latin America
Tel: +1-800-547-8629
Fax: +1-905-201-2455
e-mail: sales.multilin@ge.com

Europe, Middle East, Africa
Tel: +34-94-485-88-00
Fax: +34-94-485-88-45
e-mail: gemultilin.euro@ge.com

Instrument Transformers, Inc.

a division of GE Multilin

Current Transformer

Model 190 *Wound Primary*

Model 190X *Auxiliary Transformer*

REGULATORY AGENCY APPROVALS

E93779 LR89403

Manufactured to meet the requirements of ANSI/IEEE C57.13.
Classified by U.L. in accordance with IEC 44-1

FREQUENCY:
50-400 Hz.

INSULATION LEVEL:
0.6 kV, BIL 10 kV full wave.

CONTINUOUS THERMAL CURRENT RATING FACTOR:
1.33 at 30°C. amb., 1.0 at 55°C. amb.

Terminals are brass studs No. 8-32 with one flatwasher, lockwasher and regular nut,for ratios up to 25:5 and 1/4-20 studs for higher ratios.

Order mounting bracket kit No. 0221B00777

Approximate weight 4 lbs.

The **Model 190** is a low ratio primary current transformer, suitable for primary currents up to 50 amperes. The table below lists the most common current ratings.

CATALOG NUMBER	V.A. ± 1% CLASS	ANSI METERING CLASS AT 60HZ				
		B0.1	B0.2	B0.5	B0.9	B1.8
190-2-XXX	12.5	0.6	0.6	1.2	2.4	—
190-4-XXX	30.0	0.3	0.3	0.3	0.6	1.2

RATIO	1:5	2.5:5	5:5	7.5:5	10:5	15:5	20:5	25:5	30:5	40:5	50:5
SUFFIX	001	0025	005	0075	010	015	020	025	030	040	050
									*	*	*

* 1/4-20 stud terminals

Model 190 Wound Primary & 190X Auxiliary Transformer

ANSI Metering Class: 0.3 B0.5

The **Model 190X** is an auxiliary transformer for use in the secondary of main current transformers to change the ratio for metering applications. Since the **Model 190X** is used in the secondary of another current transformer it has no voltage rating. It is given a 2500 volt 60Hz high potential test. It is designed to be used on circuits not to exceed 600 volts to ground or between windings.

CATALOG NUMBER	CURRENT RATIO
190X0100	5:0.1
190X0200	5:0.2
190X0250	5:0.25
190X0500	5:0.5
190X0625	5:0.625
190X1000	5:1
190X1250	5:1.25
190X1667	5:1.667
190X2000	5:2
190X2395	5:2.395
190X2500	5:2.5
190X2890	5:2.89
190X3000	5:3
190X3330	5:3.33
190X3750	5:3.75
190X4000	5:4
190X5000	5:5
190X5330	5:5.330

CATALOG NUMBER	CURRENT RATIO
190X6250	5:6.25
190X7500	5:7.5
190X8000	5:8
190X10000	5:10
190X12500	5:12.5
190X15000	5:15
190X1500-5	1.5:5
190X1667-5	1.667:5
190X2500-5	2.5:5
190X2875-5	2.875:5
190X7500-5	7.5.5
190X10500-5	10.5:5
190X0500-1	0.5:1
190X0923-1	0.923:1
190X0400-10	0.4:10
190XSUM-2 **	5+5:5
190XSUM-3 **	5+5+5:5
190XSUM-4 **	5+5+5+5:5
190XSUM-5 **	5+5+5+5+5:5

** The circuits of up to five secondaries may be totalized. Equal or unequal line current transformers can be summed with this transformer. Advise the ratios of the line current transformers to be totalized for unequal ratios. Output terminals are X1-X2.

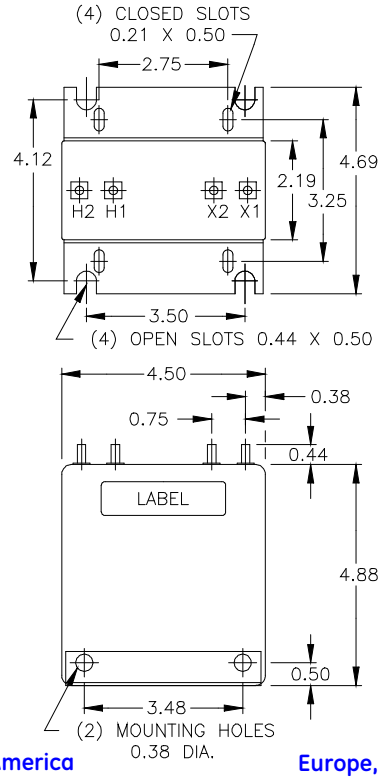

USA, Canada, Asia, Latin America
Tel: +1-800-547-8629
Fax: +1-905-201-2455
e-mail: sales.multilin@ge.com

Europe, Middle East, Africa
Tel: +34-94-485-88-00
Fax: +34-94-485-88-45
e-mail: gemultilin.euro@ge.com

Please refer to our website www.GEMultilin.com for more detailed contact information

SENTINALL™

S511L SERIES (2000)

PROJECT INFORMATION

Job Name _____

Fixture Type _____

Catalog Number _____

Approved by _____

PRODUCT FEATURES:

» Surface wall mount – nominal 5"W×11"H

» ADA Compliant

SPECIFICATIONS

LENS/HOUSING: One-piece wraparound lens/housing (UV-stabilized, high impact, virgin injection molded polycarbonate). High efficiency Pearlescent or Clear Prismatic or Emergency Blue Prismatic lens. Housing available in matte white or dark bronze finish.

BASEPLATE: 20-gauge CRS. Baseplate provided with four-point mounting holes, one wireway hole and junction box mounting holes. TGIC polyester powder coat – 5-stage pre-treatment. Salt spray test: 1,000 hours; Reflectance: 92%. See Options or Accessories for marine grade aluminum baseplate (AL), rough surface aluminum mounting plate (MP) and surface adapter (SA).

REFLECTOR: Full reflector/wire cover – white finished aluminum (92% reflectivity).

GASKET: Die-cut closed cell neoprene gasket seals lens/housing to mounting surface.

HARDWARE: One stainless steel Torx® with center pin fastener secures lens/housing to baseplate.

ELECTRICAL: Magnetic 120V ballasts normal power factor – See Options for power factor corrected. Magnetic 277V ballasts power factor corrected and include surface adapter. Electronic rapid start ballasts high power factor (<10% THD).

INSTALLATION: Standard four-point mounting required for Peace of Mind Guarantee®. Fixture must be installed lamp base up.

PATENT: U.S. Patent No. 4493013.

LISTINGS: UL and CUL listed for Wet Location. ADA Compliant.

PEACE OF MIND Guarantee® c UL us ADA

ORDERING INFORMATION (Ex: S511L-C-DB-13-1-120)

Model	Lens Type	Finish	Lamp Type	Lamp Qty	Voltage	Options	Accessories
S511L							

Lens Type
- **B** Blue Prismatic
- **C** Clear Prismatic
- **P** Pearlescent

Finish
- **MW** Matte White
- **DB** Dark Bronze

Lamp Type (Qty/Ballast/Volt./StartingTemp)
- **7** 7 Watt Twin (1,2/MB/120,277/0°F)
- **9** 9 Watt Twin (1,2/MB/120,277/0°F)
- **13** 13 Watt Twin (1/MB/120,277/32°F)
- **13Q*** 13 Watt Quad (1/RS/120,277/0°F) Note: 13W Quad luminiare dimensions are 5.19"W×11"H x 6"D (non-ADA)

Lamp Quantity (See Lamp Type)
- **1** One Lamp
- **2** Two Lamps

Voltage
- **120** 120 Volts
- **277** 277 Volts – ADA compliant Adapter included with 277V Twin Tube

Options
- **AL** Marine Grade Aluminum Baseplate
- **PFC** Power Factor Corrected Ballast – 120 Volt only (277 Volt standard)

Accessories
- **MP** Mounting Plate (9131) (n/a with 277V Twin Tube or SA Accessory)
- **SA** Surface Adapter – ADA Compliant (Material matches baseplate; finish matches housing)
- **9500** Torx® Screwdriver

DIMENSIONAL DATA

BASEPLATE (CRS OR AL)

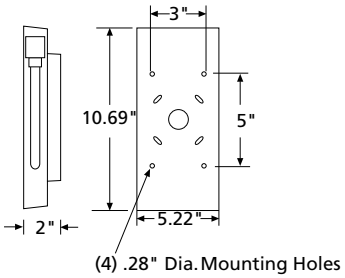

MOUNTING PLATE (MP)

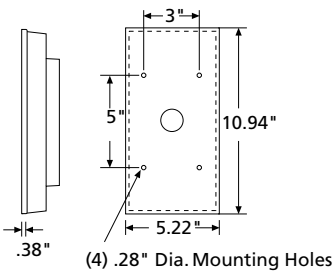

SURFACE ADAPTER (SA) STANDARD WITH 277V TWIN TUBE

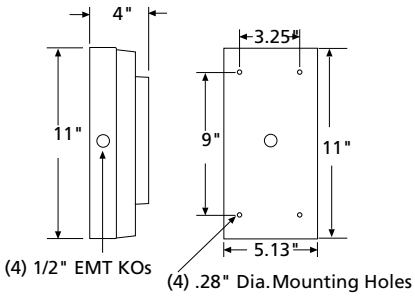

www.kenall.com **P: 800-4-Kenall** **F: 847-360-1781** **1020 Lakeside Drive Gurnee, Illinois 60031**

When you see this image, you will know the Kenall product shown or described is designed and manufactured in the USA with components purchased from US suppliers, and meets the Buy American requirements under the ARRA. Kenall has not determined the origin of its domestically purchased components or the subcomponents thereof. Content of specification sheets is subject to change; please consult www.kenall.com for current product details. © 2013 Kenall Mfg. Co. All rights reserved.

MGate™ MB3170/3270

1 and 2-port advanced serial-to-Ethernet Modbus gateways

- Configuration is exceptionally easy
- Slave mode supports 16 TCP masters and up to 62 serial slaves at the same time
- Master mode supports 32 TCP slaves at the same time
- Emergency request tunnels ensure QoS control
- Serial redirector function provided
- Embedded Modbus protocol analyzer
- Redundant dual DC power inputs
- Built-in Ethernet cascading for easy wiring

Overview

The MB3170 and MB3270 are advanced Modbus gateways that provide maximum flexibility for integrating industrial Modbus networks of all types and sizes. They are designed to integrate Modbus TCP, ASCII, and RTU devices in almost any master and slave combination, including serial master to serial slave, or simultaneous serial and Ethernet masters. A special priority control feature allows urgent commands to obtain immediate response. All models are ruggedly constructed, are DIN-rail mountable, and offer built-in optical isolation for serial signals as an option.

Integrate TCP Masters without Altering the Modbus RTU/ASCII Network or Software

The MB3270 can integrate Modbus TCP with Modbus RTU/ASCII, without modifying the existing Modbus RTU/ASCII architecture or software. With the serial redirector function, a serial master can maintain direct access to serial slave devices through a specially mapped serial port. This allows the serial and TCP masters to access serial slaves simultaneously.

Cascade Ethernet Ports for Easy Wiring

Advanced models of the MGate™ MB3000 series have two Ethernet ports to make network wiring easier. Dual Ethernet ports allow users to string multiple Modbus gateways together using standard RJ45 Ethernet cables, eliminating the need for a separate Ethernet switch.

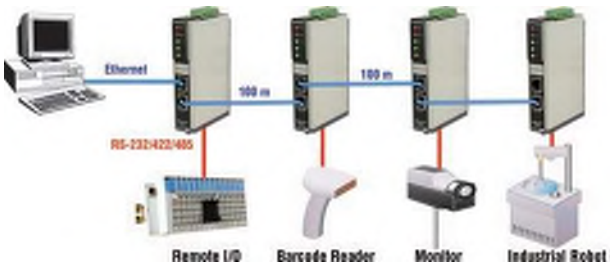

Redundant Power Inputs

Advanced models of the MB3000 series have dual power inputs for greater reliability. The power inputs allow simultaneous connections to two live DC power sources, so that continuous operation is provided even if one power source fails. The higher level of reliability makes these advanced Modbus gateways ideal for demanding industrial applications.

Warning by Relay Output

A relay output is provided for the Ethernet link and power input status. The relay output gives maintenance engineers an additional tool for troubleshooting and maintenance.

Priority Control for Urgent Commands (patent pending)

As Modbus networks increase in size and complexity, the lag time between commands and responses becomes a major concern. Advanced models of the MB3000 series provide a priority control function for urgent commands, allowing users to force certain commands to get an immediate response. Depending on your system's requirements, different methods are available to define which commands receive priority.

Specifications

Ethernet Interface

Number of Ports: 2 (1 IP)
Speed: 10/100 Mbps, Auto MDI/MDIX
Connector: 8-pin RJ45
Magnetic Isolation Protection: 1.5 KV built-in

Serial Interface

Number of Ports:
MB3170/3170I: 1
MB3270/3270I: 2
Serial Standards: RS-232/422/485, software selectable
Connectors:
MB3170/3170I: DB9 male for RS-232, Terminal block for RS-422/485
MB3270/3270I: DB9 male x 2
ESD Protection: 15 KV for all signals
RS-485 Data Direction Control: ADDC® (automatic data direction control)
Pull High/Low Resistor for RS-485: 1 KΩ, 150 KΩ
Terminator for RS-485: 120 Ω

Serial Communication Parameters

Data Bits: 7, 8
Stop Bits: 1, 2
Parity: None, Even, Odd, Space, Mark
Flow Control: RTS/CTS, DTR/DSR (RS-232 only)
Baudrate: 50 bps to 921.6 Kbps

Serial Signals

RS-232: TxD, RxD, RTS, CTS, DTR, DSR, DCD, GND
RS-422: Tx+, Tx-, Rx+, Rx-, GND
RS-485-4w: Tx+, Tx-, Rx+, Rx-, GND
RS-485-2w: Data+, Data-, GND

Software

Operation Modes: RTU Slave, RTU Master, ASCII Slave, ASCII Master
Utilities: MGate™ Manager Suite for Windows 98, ME, NT, 2000, XP, 2003, Vista
Multi-master and Multi-drop:
Master mode: 32 TCP slaves
Slave mode: 16 TCP masters (request queue 32-deep for each master)
Bonus Features: Smart Routing, Serial Redirection, Priority Control

Physical Characteristics

Housing: Plastic
Dimensions:
Without ears: 29 x 89.2 x 118.5 mm (1.14 x 3.51 x 4.67 in)
With ears extended: 29 x 89.2 x 124.5 mm (1.14 x 3.51 x 4.90 in)

Environmental Limits

Operating Temperature:
Standard Models: 0 to 55°C (32 to 131°F)
Wide Temp. Models: -40 to 75°C (-40 to 167°F)
Operating Humidity: 5 to 95% RH
Storage Temperature: -40 to 85°C (-40 to 185°F)

Power Requirements

Input Voltage: 12 to 48 VDC
Power Connector: Terminal block

Regulatory Approvals

EMC: CE (EN55022 Class A and EN55024), FCC Part 15 Subpart B Class A
Safety: UL (UL60950-1), TÜV (EN60950-1)
Hazardous Location:
UL/cUL Class 1 Division 2 Groups A, B, C, D
ATEX Class 1 Zone 2
Shock: IEC 60068-2-27
Freefall: IEC 60068-2-23
Vibration: IEC 60068-2-6
Marine: DNV
EMS:
EN61000-4-2 (ESD): Level 3
EN61000-4-3 (RS): Level 3
EN61000-4-4 (EFT): Level 4
EN61000-4-5 (Surge): Level 3
EN61000-4-6 (CS): Level 3
EN61000-4-8: Passed
EN61000-4-11: Passed
EN61000-4-12: Passed

Warranty

Warranty Period: 5 years
Details: See www.moxa.com/warranty

Dimensions

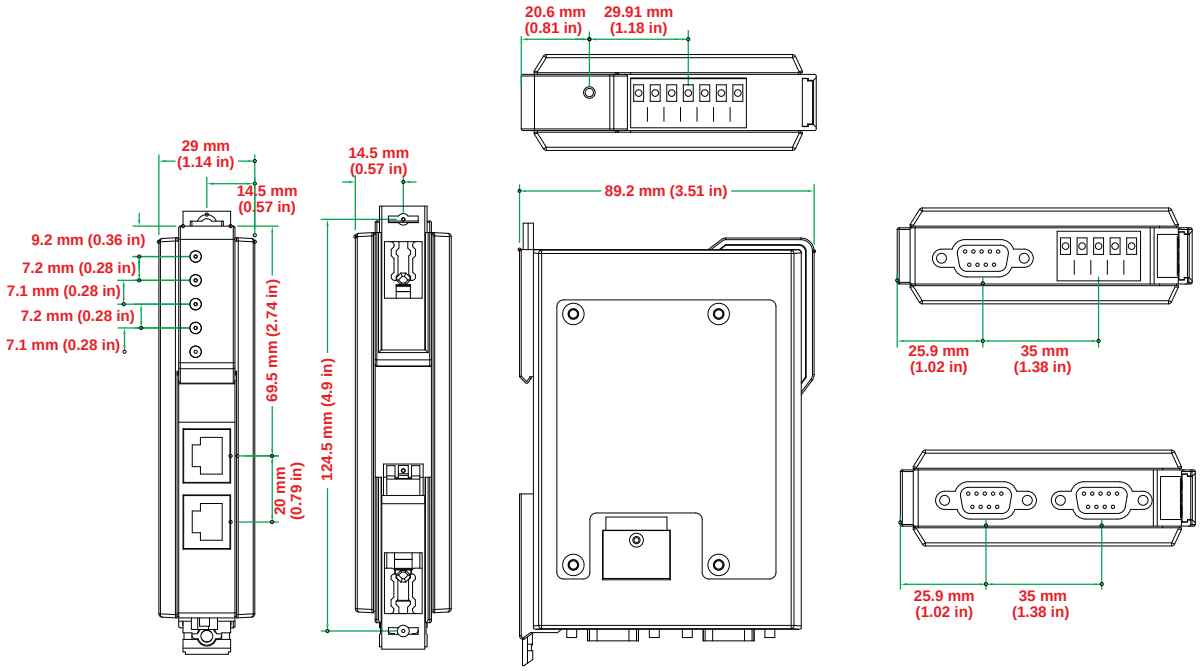

Ordering Information

Available Models

MGate™ MB3170: 1-port advanced Modbus gateway, 0 to 55°C operating temperature
MGate™ MB3170I: 1-port advanced Modbus gateway with 2 KV isolation, 0 to 55°C operating temperature
MGate™ MB3270: 2-port advanced Modbus gateway, 0 to 55°C operating temperature
MGate™ MB3270I: 2-port advanced Modbus gateway with 2 KV isolation, 0 to 55°C operating temperature
MGate™ MB3170-T: 1-port advanced Modbus gateway, -40 to 75°C operating temperature
MGate™ MB3170I-T: 1-port advanced Modbus gateway with 2 KV isolation, -40 to 75°C operating temperature
MGate™ MB3270-T: 2-port advanced Modbus gateway, -40 to 75°C operating temperature
MGate™ MB3270I-T: 2-port advanced Modbus gateway with 2 KV isolation, -40 to 75°C operating temperature

Optional Accessories (can be purchased separately)

DR-45-24: 24 VDC DIN-rail power supply (2 A @ 45 W) with universal 85 to 264 VAC input
DR-75-24: 24 VDC DIN-rail power supply (3.2 A @ 75 W) with universal 85 to 264 VAC input
DR-120-24: 24 VDC DIN-rail power supply (5 A @ 120 W) with switch for choosing 88 to 132 VAC, or 176 to 264 VAC input

Package Checklist

- MGate™ MB3170 or MB3170I or MB3270 or MB3270I Modbus Gateway
- Document and Software CD
- Quick Installation Guide (printed)
- Warranty Card

© Moxa Inc. All Rights Reserved. Updated Jun. 25, 2009. Specifications subject to change without notice. Please visit our website for the most up-to-date product information.

Meter overview

9410 overview

The 9410 series power and energy meters help meet the needs of your energy monitoring and cost management applications.

All 9410 meters comply with international metering accuracy standards. You can customize your meter by loading specialized frameworks, and adding option modules and incorporating mounting accessories into the physical installation.

Meter features

True RMS metering to the 63rd harmonic
Active (kW), reactive (kVAR) and apparent (kVA) power
600 V direct connection on voltage inputs
Minimum/maximum readings of metered data
Power quality readings (THD)
Downloadable firmware and template
Configuration through integrated or remote display
Modbus master, Ethernet gateway protocols supported
Web interface
Sag/Swell capture for voltage and currents
Time synchronization to 1 ms accuracy
Dual port Ethernet (two physical ports, one Ethernet IP address)
Water Air Gas Electricity Steam (WAGES) support
Time of use support
Trending and forecasting
Alarms (active and historic) display viewing and acknowledgment
Multiple languages supported
Advanced security
Variety of industry-standard communications protocols supported

Your meter in an energy management system

As a key piece in your energy management system, the meter provides highly accurate measurements and calculations for a wide variety of power system values, performs analysis on collected data, alerts you of potential issues and integrates with a variety of display and analysis software.

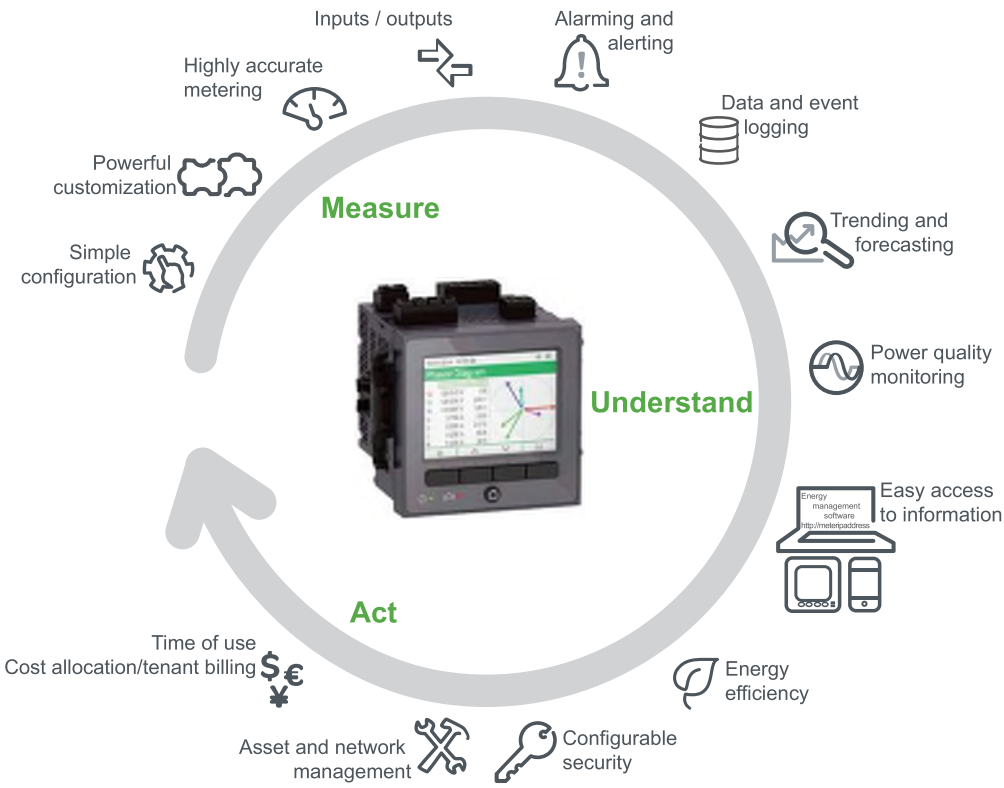

Perform basic setup using the color LCD display, the meter webpages or ION Setup	Configure meter to help protect against unauthorized configuration of your meter and access to your meter's data
Customize meter functionality using the power of ION	Improve energy efficiency and track compliance to green standards
Access highly accurate measurements and calculations for a wide variety of power system values	Help prolong asset life with proactive network management
Use the onboard or extendible I/O for non-critical control, WAGES and input metering, energy pulsing and system monitoring (for example, breaker status)	Log data in a number of onboard default logs, or customize your meter to log other parameters, and access that information using software or webpages
Receive notifications of predefined meter and system events or create custom alarms	Time of use and perform cost allocation/tenant billing
Track the trends for power system values over time to understand energy usage patterns, optimize network capacity and forecast future usage	Easily access information after basic configuration using: • a variety of industry-standard protocols • various energy management and system control software • the meter's internal webpages (standard or customized to suite your needs) • the optional remote display (DIN models) Use the meter as a gateway to access information from downstream devices
Monitor compliance to a variety of power quality standards using the meter's highly accurate metering Use the meter's setpoint learning feature to learn your power system's normal operating values Locate disturbances using disturbance direction detection	

Measured parameters

Energy

Your meter provides bi-directional 4-quadrant energy metering.

Your meter provides active, reactive and apparent energy values.

- kWh, kVARh, kVAh delivered and received
- kWh, kVARh, kVAh net (delivered - received)
- kWh, kVARh, kVAh total (delivered + received)
- Volt-squared-hours and amp-squared-hours

Energy parameters can be logged automatically on a programmed schedule.

All energy values represent the total for all three phases.

Demand

Your meter supports several demand calculation methods, including block, rolling block, synchronized and predicted demand.

It can measure demand on any instantaneous value and record peak (maximum) and minimum demand with time and date information.

- kW, kVAR, kVA demand
- kW, kVAR, kVA peak demand
- Amps, Volts demand

Instantaneous

Your meter provides one second and half-cycle measurements, per phase and totals for many values.

- Voltage and current
- Apparent power (kVA), active power (kW) and reactive power (kVAR)
- Power factor and frequency
- Voltage and current unbalance

Harmonics

Your meter provides harmonic distortion metering, recording and real-time values for all voltage and current inputs.

- Individual harmonics (including magnitude and phase angle) up to the 63rd harmonic
- Total even harmonic distortion (TEHD) and total odd harmonic distortion (TOHD)
- Total harmonic distortion (THD) or total demand distortion (TDD)
- K-factor, Crest factor

Min/max recording

Your meter records new minimum and maximum data every recording interval for a variety of values.

- Voltage and current
- kW, kVAR and kVA
- Power factor
- Frequency
- Voltage unbalance
- Plus any measured value

Power quality

Your meter measures and records voltage and current sags and swells.

Your meter also has many power quality related features.

- Disturbance direction detection: this allows the meter to analyze disturbance (sag/swell) information to help determine the direction of the disturbance relative to the meter.
- Setpoint learning: this allows the meter to learn the power quality characteristics of your system, to help identify what constitutes a sag or a swell.

- COMTRADE: this allows the meter to save waveform data in COMmon format for TRAnsient Data Exchange (COMTRADE) on its internal FTP server.

Your meter includes the following power quality compliance:

- EN50160: Your meter measures and presents statistics for determining EN50160 compliance.
- IEC 61000-4-30: Your meter complies with the IEC 61000-4-30 power quality standard.
- IEC 62586: Your meter complies with the IEC 62586 power quality standard.

Localization

The meter can be customized to use different regional settings.

Localization settings determine:

- The language used for the display and webpages
- Time, date and digit formats
- Displayed phase labels (123/ABC)
- IEEE (Institute of Electrical and Electronics Engineers) or IEC (International Electrotechnical Commission) conventions for power, power factor and energy

You can configure your meter's localization settings through the display or using ION Setup.

Data display and analysis tools

Display

Use the meter's display for local monitoring and standalone applications.

The color LCD display lets you view real-time values, events and alarms, and perform basic device configuration. Connect a remote display to a meter without an integrated display to view meter data and perform basic meter configuration.

Active and historical alarms

The meter's display shows an alarm icon and the alarm LED flashes if your meter detects an active alarm condition.

Depending on the priority of the alarm, your meter's display also flashes. You can view and acknowledge active alarms and historic alarms and events through the display and software webpages. An active alarm becomes a historic alarm when the alarm condition no longer exists.

Meter internal web server feature

Your meter's internal web server provides quick and easy access to real-time energy and basic power quality information without special software using an on-board web server combined with an Ethernet port.

The built-in web pages display selected energy and power quality information through the web-enabled device; these pages also support basic meter configuration.

Email messaging feature

You can configure your meter to automatically email information, whether notification of a high-priority event or a regularly scheduled send of logged data, to an external email address.

Specify the type of event that triggers an email alert, such as a power quality disturbances or interval for logged data. Email messages from your meter are received like any other email message.

Supported protocols

Your meter's fundamental protocol and architecture is ION.

You can integrate the meter into various industry-standard networks. Data that the meter measures can be made available to other devices using Modbus, DNP 3.0 and SNMP as well as the MV-90 translation system. You can configure the meter to import data from other devices on these networks. Your meter supports the IEC 61850 protocol and COMTRADE waveform data format.

Your meter also supports IPv6, DPWS and RSTP Ethernet protocols.

Related Topics

- Protocols, ports and connections

ION Setup device configuration tool

ION Setup is a free configuration tool for your meter that allows you to remotely configure your meter's features over Ethernet or serial communications.

- Use the setup screens to guide you through the process of configuring your meter.
- Use the real-time data screens to verify your meter's configuration.
- Use the data screens to view your meter's recorded data.
- Use the charting function to view your meter's recorded waveforms.

You can download ION Setup from www.usa.siemens.com/pds.

See the online ION Setup help, available from www.usa.siemens.com/pds, for instructions on connecting to your meter.

Meter types

The 9410 series is available in two physical form factors, and has several accessories.

Model	Commercial reference	Description
9410DC	US2:9410DC	Panel-mounted meter with integrated display
9410D24VDC	US2:9410D24VDC	Same as the 9410DC, except with low-voltage DC control power
9410TC	US2:9410TC	DIN rail-mounted meter without display, which can be connected to a remote display
9410T24VDC	US2:9410T24VDC	Same as the 9410TC, except with low-voltage DC control power
9410RC	US2:9410RC	DIN rail-mounted meter packaged with a remote display

Model	Commercial reference	Description
9410RVDC	US2:9410R24VDC	Same as the 9410TC, except with low-voltage DC control power
948DISP96	US2:948DISP96	Remote display (for DIN meter only)
948M2DO6DI	US2:948M2DO6DI	Digital I/O option module (2 outputs, 6 inputs)
948M2AO4AI	US2:948M2AO4AI	Analog I/O option module (2 outputs, 4 inputs)
9410SK	US2:9410SK	Voltage and current sealing kit
94PMAK	94PMAK	Mounting adapter kit for remote display and DIN meter

Mounting adaptors

There are different mounting adaptor accessories that can help when installing your meter in existing panels and cutouts where the default mounting hardware is not appropriate.

Mounting adaptor kits are ordered separately from the meter.

Terminal covers

The voltage and current terminal covers help prevent tampering with the meter’s voltage and current measurement inputs.

The terminal covers enclose the terminals, the conductor fixing screws and a length of the external conductors and their insulation. The terminal covers are secured by tamper-resistant meter seals.

These covers are included for meter models where sealable voltage and current covers are required to comply with revenue or regulatory standards.

The meter terminal covers must be installed by a qualified installer.

Refer to your meter's installation sheet or the instructions that came with your terminal covers for instructions on installing the terminal covers.

Replacement hardware

You can order replacement mounting and installation hardware for your meter and accessories.

Precision Pots & Turns Counting Dials

Spectrol

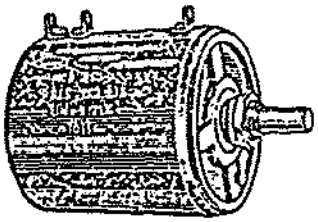

MODEL 860

- Wide Temperature Range
- Independent Linearity
- Excellent Stop Strength

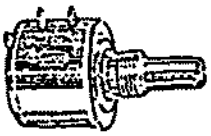

MODEL 534

10-TURN MODEL 534

Low cost industrial wirewound precision potentiometer available as three turn (533), five turn (535) and dual gang units as well as 10-turn (534) standard. Choose between bushing and servo-mounting styles. Rugged construction and superior stop strength inherent in design. Resistance tolerance ±5%. Max. power 2.0 watts at 70°C. Operating temp. −55 to 125°C. Linearity tolerance ±.25%. Shaft revolutions 1 million. Temperature coefficient 20 ppm/°C. Size: .750" x .875" dia.

Stk. No.	Ohms	1-4	5-9	10-24	25-49
12F4462	100	5.95	5.80	5.65	5.35
12F4464	200				
12F4465	500				
12F4466	1K				
12F4467	2K				

Stk. No.	Ohms	1-4	5-9	10-24	25-49
12F4468	5K	5.95	5.80	5.65	5.35
12F4469	10K				
12F4470	20K				
12F4471	50K				
12F4472	100K				

10-TURN MODEL 860

High power model for wide service. Independent linearity: ±0.25%. Has stops. Electrical rotation: 3000° + 4° to 0°. Temperature range: −55°C to 125°C. Shaft length including bushing: 0.812" x 0.2497 diameter. Bushing: 3/-32 x 3/-". Resistance Tolerance: Up to 200 ohms, ±5%; above, ±3%. 8.0 watts @ 40°C. Size: 2.000" x 1.812" diameter. Weight: 4.5 oz. maximum.

Stk. No.	Ohms	1-4	5-9	10-24	25-49
12F2755	20	10.50	10.20	10.00	9.45
12F2756	50				
12F2757	100				
12F2758	200				
12F2759	500				
12F2760	1K				
12F2761	2K				

Stk. No.	Ohms	1-4	5-9	10-24	25-49
12F2762	5K	10.50	10.20	10.00	9.45
12F2763	10K				
12F2764	20K				
12F2765	30K				
12F2766	50K				
12F2767	100K				
12F2768	200K				

TURNS COUNTING DIALS

Model 11

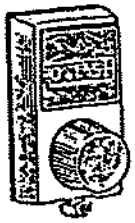

Model 15

Model 21

Model 11. Eleven turns. Counts to 1099. Satin body finish. Black knob and brake lever. Black numerals. 1" diameter. For 1/4" shaft. Order by stock number. Weight: 0.7 oz. maximum.

Stk. No.	Type	Shaft Dia.	1-4	5-9	10-24	25-49
12F2772	11-1-11	1/4"	9.65	9.00	8.40	7.85

Model 15. Ten turns. Counts to 999. Satin body finish. Black removable knob, for shaft access after mounting. Smooth operating mechanism and positive brake. Size: 1.750" H x 1.0" W x 1.0" Lg. Weight 1.5 ozs.

Stk. No.	Type	Shaft Dia.	1-4	5-9	10-24	25-49
12F4492	15-1-11	1/4"	12.40	12.30	11.75	10.90

Model 21. Fifteen turns. Counts to 1499. Satin body finish; black knob and brake lever. Black numerals. 1 3/16" diameter. For 1/4" shaft. Order by stock number. Weight: 3.0 oz. maximum.

Stk. No.	Type	Shaft Dia.	1-4	5-9	10-24	25-49
6F494	21-1-11	1/4"	9.30	8.70	8.10	7.55

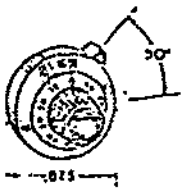

Model 16-1-11

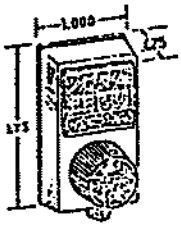

Model 15-2-11

Model 16-1-11. Fifteen turns. Counts to 1499. Clear anodized body finish. Black turning and brake lever knobs. Size: .875" deep, .875" diameter, .250" shaft bore. Wt. .7 oz.

Stk. No.	Type	Shaft Dia.	1-4	5-9	10-24	25-49
12F4498	16-1-11	1/4"	6.95	6.75	6.55	6.3[illegible]

Model 15-2-11. 100 turns. Counts to 9999. Satin chrome body finish. Knobs, bezel, and base are matte black plastic. White numerals on black background. Size: 1.75H x 1.00W x 1.00 Lg. Weight: 1.6 ounces.

Stk. No.	Type	Shaft Dia.	1-4	5-9	10-24	25-49
12F4497	15-2-11	1/4"	16.85	14.75	13.80	12.85

Industrial Control Transformers

Catalog
August
05

Class 9070

CONTENTS

Description . . . . . Page

Product Description 3
Type T Transformers 4
Type EO Transformers 27
Fuse Protection 35
Type TF Transformers 42
Field Installed Fuse Options 44
Application 55
Frequently Asked Questions 58

a brand of Schneider Electric

SQUARE D

PRODUCT DESCRIPTION

Control power transformers from Schneider Electric set the industry standard for design innovation and performance. They are designed with low impedance windings for excellent voltage regulation, and can accomodate the high inrush current associated with contactors, starters, solenoids, and relays.

A variety of designs are available to meet the diverse needs of panel builders and machinery OEMs. The versatility of our control transformer line offers unparalleled options for design engineers. We also have one of the most extensive offering of custom products with no minimum order requirements.

We have a national network of distributors to ensure prompt delivery, including industry leading delivery on custom products. In most cases, we can design, manufacture, and ship a custom unit in two weeks or less.

The Global Product Offering—Type T

Type T is our most popular and complete line of control transformers. It comes with unmatched design innovations for top performance and is manufactured using the most advanced insulating materials. The Type T control transformer is the best choice if size and cost are of concern.

The Exceptional Regulation Offering —Type EO

Constructed with traditional materials and manufacturing processes, Type EO transformers are UL and CSA Component Recognized. Units are designed for 55°C rise. All units are 60HZ rated, with de-rated VA levels for 50HZ.

Transformers with Fuse Block Protection—Types TF and EOF

We offer both product lines with factory installed overcurrent protection fuse blocks.

Type TF and EOF transformers consist of two primary fuse blocks and one secondary fuse block, a configuration that meets the majority of overcurrent needs by panel builders and machinery OEMs. Since the fuse blocks are pre-wired and mounted on top of the transformer, the Type TF and EOF transformers have the same footprint as the Type T and Type EO units, respectively. This design frees up space normally used for separate fuse blocks

We also have an extensive fuse block offering for custom applications. See the overcurrent section of this catalog for full details.

Leaded Control Transformer Line

Schneider Electric offers transformers with internally pre-wired 24-inch primary and secondary leads, instead of terminal boards, to make installation easier and faster for many applications. These are only available for single voltage primary and single voltage secondary applications.

MultiTap

Schneider Electric offers Type T and Type EO transformers in the MultiTap version. The MultiTap control transformer was designed to respond to the increased need for voltage and stock flexibility. It combines multiple primary voltages with one or more secondary voltages, all in a single transfomer.

The most flexible MultiTap voltage is the Universal, available on the Type T product line only. It allows for standard primary voltages of 208 to 600V and 110, 115, or 120V secondary voltages.

© 1999–2005 Schneider Electric All Rights Reserved

Type T VA Ratings

UL, cUL, CSA and NOM VA Rating	CE VA Rating
25	25
50	50
75	75
100	100
150	150
200	200
250	160
300	200
350	250
500	300
750	500
1000	630
1500	1000
2000	1500
3000	2000
5000	3000

Type T Listings

Listing	File	VA Range
UL	E61239, Guide XPTQ2	25–5000
cUL	E61239	1500–5000
CSA	LR37055, Guide 184-N-90	25–1000
EN	947923, EN 61 558/01.89 (TUV ref: 00941-RAG/sg E9371495E01)	25–200
	9579078, EN 61 558/01.89 (TUV ref: 00941-RAG/sg E9471921E01)	250–1000
	9579078, EN 61 558/01.89 (TUV ref: 00941-RAG/sg E9471921.02E01)	1500–3000

TYPE T TRANSFORMERS

The Type T units are designed for the global market and are the best choice when size and cost are of concern. This is our most popular and complete offering of industrial control transformers. The following features are included:

- 50/60 Hz rated
- Customer installed accessories (Finger-Safe covers, fuse blocks, fuse clips)
- Type T transformers are designed with various temperature classes:
  - — 25–150 VA with a 55° C temperature rise, 105° C insulation
  - — 200–350 VA with a 80° C temperature rise, 130° C insulation
  - — 500–5000 VA with a 115° C temperature rise, 180° C insulation

Schneider Electric manufactures a wide variety of voltage combinations for control transformers. The voltage combinations are expressed as “Voltage Codes”, and are embedded within the catalog number of the transformer. Standard codes are listed. If the voltage combination you need is not listed, please call your Schneider Electric distributor for assistance.

CE Marking

Industrial control transformers (ICTs) entering the European Union (EU) after January 1, 1997 are required by EU standards to have CE marking or Declaration of Conformity to CE. EU documentation requires compliance with specification EN 61 558 of the Low Voltage Directive. Type T ICTs from Schneider Electric comply with this specification and are third party tested to TÜV standards, which adhere to, and are accepted by, EU standards. A Declaration of Conformity for all Type T units is available upon request.

Because of different overload criteria in the CE specification, Schneider Elecric dual rates these transformers for UL VA, cUL VA, CSA VA, NOM VA and CE VA ratings (see “Type T VA Ratings” table). Because they are widely used with control circuit panels, ICTs are also required to comply with EN 60 204 and EN 61 558 in these applications. The Type T transformer line complies with EN 60 204 when Fingersafe® covers are installed.

For more information regarding CE marking, please contact your local Schneider Electric field sales office.

© 1999–2005 Schneider Electric All Rights Reserved

Example:

This example assumes the following:

- Two NEMA size 0 contactors do not start together, but one could be ON when the other starts.
- One NEMA size 2 contactor can start with either of the other contactors.
- One pilot light at 2 VA

1. VA and inrush are:
   NEMA 0: sealed 27 VA; inrush 245 VA
   NEMA 2: sealed 37 VA; inrush 311 VA; pilot light 2 VA
2. Total VA: 27 + 27 + 37 + 2 = 93 VA
3. Total inrush VA: 245 + 311 + 27 + 2 = 582 VA
4. From Regulation Chart for Type T at right below:
   100 VA minimum unit; inrush 499 VA will not work at 90%
   150 VA (next standard size); inrush 666 VA will work at 95%

Selection Guide

1. Determine inrush and sealed VA of each coil in the control circuit and VA of all other components.
2. Total all sealed VA of all operating coils and other loads VA (determines minimal VA size required for the circuit).
3. Total the inrush VA of all coils that are starting at the same time and all loads and coils that are running (using the regulation chart to give possible units to be used).
4. Take VA size from step 2, go to standard VA size in chart below. Make sure inrush VA from chart is greater than total VA from step 3. If not, go to next larger VA size and repeat.

If your supply voltage is stable and fluctuates less than 5%, we recommend you use the 90% secondary voltage column. If your supply voltage is not stable and fluctuates more than 10%, we recommend you use the 95% secondary voltage column. We recommend that you never use the 85% secondary voltage column since magnetic devices lose life expectancy if they are continuously started at 85% of rated voltage.

Regulation Chart for Type T

VA	Secondary Voltage					
	Inrush UL VA at 20% Power Factor			Inrush UL VA at 40% Power Factor		
	95%	90%	85%	95%	90%	85%
50	193	266	339	151	215	282
75	271	396	520	210	318	430
100	339	499	659	266	404	549
150	666	893	1120	529	731	942
200	588	815	1041	459	659	866
250	1416	1910	2388	1057	1494	1936
300	1634	2184	2709	1194	1681	2169
350	1894	2592	3261	1392	2005	2621
500	3197	4104	4981	2374	3195	4019
750	3770	5515	7231	2887	4391	5945
1000	6587	9079	11430	4706	6886	9051
1500	19324	23983	28607	15066	19361	23756
2000	31384	38777	46161	24794	31630	38667
3000	26539	39934	52713	19355	30721	42216
5000	53111	85265	116277	39368	66309	93882

© 1999–2005 Schneider Electric All Rights Reserved

Industrial Control Transformers
Type T Transformers

Use the following table to quickly find a Type T transformer for a 120 volt load for your specific application. First, find your source and load voltages. Then, go to the indicated pages for details on the transformer(s) matching those voltages.

Type T Transformers for 120 Volt Loads

Source Voltage	Load Voltage	Voltage Code(s)	Go To Page(s)
110	110	D24, D55	9, 13
110	220	D55	13
110	110/220	D55	13
115	115	D24, D55	9, 13
115	230	D55	13
115	115/230	D55	13
120	120	D24, D55	9, 13
120	240	D55	13
120	120/240	D55	13
190	110	D95	11
200	115	D93, D95	9, 11
208	85	D50	12
208	95	D18	11
208	100	D50	12
208	110	D50	12
208	115	D20, D18	10, 11
208	120	D3, D40	9, 11
220	90	D32	11
220	91	D50	12
220	110	D1, D32, D95, D50, D31, D55	8, 11, 12, 13
220	120	D50	12
220	220	D31, D55	13
220	110/220	D31, D55	13
230	95	D32, D50	11, 12
230	115	D1, D20, D32, D95, D50, D31, D55	8, 10, 11, 12, 13
230	125	D50	12
230	230	D31, D55	13
230	115/230	D31, D55	13
240	99	D50	12
240	100	D32	11
240	120	D1, D32, D40, D95, D50, D31, D55	8, 11, 12, 13
240	130	D50	12
240	240	D31, D55	13
240	120/240	D31, D55	13
277	95	D18	11
277	115	D18	11
277	120	D4, D60	9, 14
277	240	D60	14
277	120/240	D60	14
364	85	D50	12
364	100	D50	12
364	110	D50	12
380	91	D50	12
380	95	D18	11
380	110	D6, D50	9, 12
380	115	D18, D33	11, 14
380	120	D40, D50	11, 12
380	230	D33	14
380	115/230	D33	14
400	95	D50	12
400	115	D33	14
400	120	D103, D50	9, 12
400	125	D50	12
400	230	D33	14
400	115/230	D33	14
415	110	D17	9
415	115	D33	14
415	230	D33	14
415	115/230	D33	14
416	99	D50	12
416	120	D40, D50	11, 12
416	130	D50	12
420	85	D50	12
420	100	D50	12
420	110	D50	12
440	90	D32	11
440	91	D50	12
440	110	D1, D32, D95, D50, D31	8, 11, 12, 13
440	120	D50	12
440	220	D31	13
440	110/220	D31	13
460	95	D32, D50	11, 12
460	115	D1, D20, D32, D95, D50, D31	8, 10, 11, 12, 13
460	125	D50	12
460	230	D31	13
460	115/230	D31	13
480	99	D50	12
480	100	D32	11
480	120	D1, D32, D40, D95, D50, D31	8, 11, 12, 13
480	130	D50	12
480	240	D31	13
480	120/240	D31	13
500	85	D50	12
500	100	D50	12
500	110	D50	12
550	90	D32	11
550	91	D50	12
550	110	D5, D32, D50, D37	9, 11, 12, 14
550	120	D50	12
550	220	D37	14
550	110/220	D37	14
575	95	D32, D50	11, 12
550	110/220	D37	14
575	95	D32, D50	11, 12
575	115	D5, D32, D50, D37	9, 11, 12, 14
575	125	D50	12
575	230	D37	14
575	115/230	D37	14
600	99	D50	12
600	100	D32	11
600	120	D5, D32, D50, D37	9, 11, 12, 14
600	130	D50	12
600	240	D37	14
600	120/240	D37	14

© 1999–2005 Schneider Electric All Rights Reserved

Use the following table to quickly find a Type T transformer for a 24 volt load for your specific application. First, find your source and load voltages. Then, go to the indicated pages for details on the transformer(s) matching those voltages.

Type T Transformers for 24 Volt Loads

Source Voltage	Load Voltage	Voltage Code(s)	Go To Page(s)
115	24	D89	15
120	24	D23, D7	15, 16
208	24	D14, D19	16, 17
230	24	D89, D112	15, 16
240	24	D2, D23, D19	15, 17
277	24	D25, D19	16, 17
380	24	D88, D19	16, 17
460	24	D92	15
480	24	D2, D19	15, 17
600	24	D16	16

Custom-Built Type T Transformers

For voltage combinations not listed, Schneider Electric offers custom-built Type T transformers. Type T units are limited to the following:

Primary Voltage Range: 120 to 600 Volts

Secondary Voltage Range: 12 to 277 Volts (25 to 1000VA)
12/24 to 277 Volts (25 to 2000VA)
24/48 to 277 Volts (25 to 5000VA)

	Single	Dual	One Primary Tap (two voltages)	Two Primary Taps (three voltages	Three Primary Taps (four voltages)	Four Primary Taps (five Voltages)
Single	25VA to 5000VA	25VA to 5000VA	Voltages with 20% 25VA to 5000VA Voltages greater then 20% 25VA to 3000VA	Voltages with 20% 25VA to 5000VA Voltages greater then 20% 25VA to 3000VA	25VA to 3000VA	25VA to 3000VA
Dual	25VA to 5000VA	25VA to 5000VA	Voltages with 20% 25VA to 5000VA Voltages greater then 20% 25VA to 3000VA	Voltages with 20% 25VA to 5000VA Voltages greater then 20% 25VA to 3000VA	25VA to 3000VA	25VA to 3000VA

Schneider Electric also offers Secondary Tapped units and Multiple Winding Secondary units. Since the sizing of these units are determined by the secondary loading, they are limited to 3000VA total secondary capacity in the 9070 Type T product.

To request a price quotation from Schneider Electric for a custom-built Type T transformer, use the price quote sheet on page 26.

© 1999–2005 Schneider Electric All Rights Reserved

Industrial Control Transformers
Type T Transformers

120 Volt Control Secondary

Voltage and Connection Options

Voltage Code	Voltages		Connections	
	Primary	Secondary	Primary	Secondary
D1	220 x 440 230 x 460 240 x 480	110 115 120	220/230/240 V:Connect to H1 and H4 Jumper H1 with H3 Jumper H2 with H4 440/460/480 V:Connect to H1 and H4 Jumper H2 with H3	Connect to X1 and X2

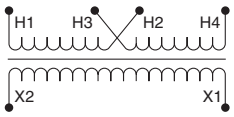

Dimensions

VA		Catalog Number	Figure	Acc. Key	A		B		C		E		F		Slots	
UL	CE				IN	mm	IN	mm	IN	mm	IN	mm	IN	mm	IN	mm
25	25	9070T25D1	1	I	3.09	79	3.00	76	2.58	66	2.00	51	2.50	64	0.20 x 0.38	5 x 10
50	50	9070T50D1	1	I	3.09	79	3.00	76	2.58	66	2.00	51	2.50	64	0.20 x 0.38	5 x 10
75	75	9070T75D1	1	I	3.34	85	3.38	86	2.89	73	2.38	61	2.81	71	0.20 x 0.48	5 x 12
100	100	9070T100D1	1	I	3.34	85	3.38	86	2.89	73	2.38	61	2.81	71	0.20 x 0.48	5 x 12
150	150	9070T150D1	1	I	3.59	91	3.75	95	3.20	81	2.88	73	3.13	80	0.20 x 0.38	5 x 10
200	200	9070T200D1	1	I	3.59	91	3.75	95	3.20	81	2.88	73	3.13	80	0.20 x 0.38	5 x 10
250	160	9070T250D1	2	I	5.30	135	3.75	95	3.21	82	2.88	73	3.13	80	0.20 x 0.38	5 x 10
300	200	9070T300D1	2	I	4.74	120	4.50	114	3.84	98	2.56	65	3.75	95	0.20 x 0.38	5 x 10
350	250	9070T350D1	2	I	5.11	130	4.50	114	3.84	98	3.00	76	3.75	95	0.20 x 0.38	5 x 10
500	300	9070T500D1	2	I	5.49	139	4.50	114	3.84	98	3.56	90	3.75	95	0.20 x 0.38	5 x 10
750	500	9070T750D1	2	I	5.61	143	5.25	133	4.51	115	3.43	87	4.38	111	0.28 x 0.56	7 x 14
1000	630	9070T1000D1	2	I	6.30	160	5.25	133	4.51	115	4.31	109	4.38	111	0.28 x 0.56	7 x 14
1500	1000	9070T1500D1	2	I	5.92	150	7.06	179	6.17	157	4.13	105	5.81	148	0.28 x 0.56	7 x 14
2000	1500	9070T2000D1	2	I	7.17	182	7.06	179	6.17	157	4.56	116	5.81	148	0.28 x 0.56	7 x 14
3000	2000	9070T3000D1	3	I	7.24	184	9.00	229	8.75	222	4.63	118	7.63	194	0.44 x 1.13	11 x 29
5000	3000	9070T5000D1	3	I	9.15	232	9.00	229	8.75	222	6.56	167	7.63	194	0.44 x 1.13	11 x 29

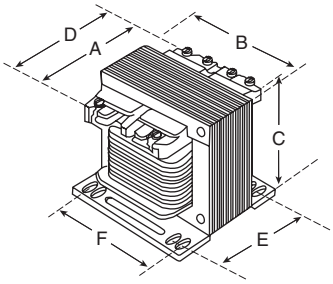

Figure 1

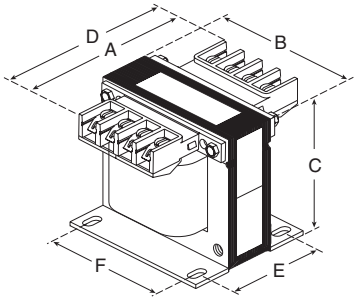

Figure 2

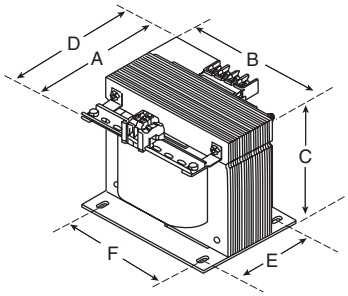

Figure 3

© 1999–2005 Schneider Electric All Rights Reserved

Series 858, Relay Sockets with Industrial Relay

	Relay socket with industrial relay Coil voltage: 24 V DC 4 changeover contacts	Relay socket with industrial relay Coil voltage: 24 V DC 4 changeover contacts (gold contacts)

* In order to prevent the gold layer from being damaged, these values shall not be exceeded. Higher switching power leads to evaporation of the gold layer. The resulting deposits in the enclosure may cause sparkovers between the coil and the contact.

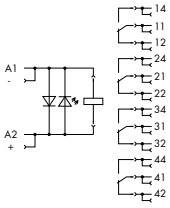

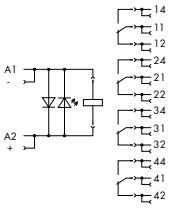

Description	Item No.	Pack. Unit	Item No.	Pack. Unit
Relay socket with industrial relay, for DIN 35 rail	**858-304**	1	**858-314**	1
Technical Data				
Coil				
Coil voltage	24 V DC		24 V DC	
Rated Power	0.9 W		0.9 W	
Coil Current	36.9 mA		36.9 mA	
Operating Range	0.8 - 1.1 x V		0.8 - 1.1 x V	
Holding Voltage	50% of V_N		50% of V_N	
Release Voltage	0.1 x V		0.1 x V	
Contacts				
Contact Material	AgCe		AgCe + 5 µm Au	
Continuous Current	5 A		50 mA*	
Inrush Current	15 A/4 s		15 A/4 s	
Max. Switching Voltage	250 V AC/ 30 V DC		30 V DC *	
Switching Power (Max.) AC1/AC15	1250 VA/300 VA		1250 VA/300 VA	
1-Phase Motor Load AC3	0.12 kW		0.12 kW	
Switching Current (Max.) DC1	5 A at 30 V DC		5 A at 30 V DC	
Min. Switching Load	12 V/100 mA		12 V/100 mA	
Switching Frequency Under Load	20 cycles/min.		20 cycles/min.	
General Specifications				
Mechanical Life	20 x 10^6 switching operations		20 x 10^6 switching operations	
Electrical Life	1 x 10^5 switching operations		1 x 10^5 switching operations	
Response Time/Drop-Out Time/Bounce Time (typ.)	25 ms/25 ms/4 ms		25 ms/25 ms/4 ms	
Nominal Voltage Acc. to VDE 0110 Part 1/4.97, IEC 60664-1	250 V/2.5 kV/2		250 V/2.5 kV/2	
Dielectric Strength Contact-Coil (1.2/50 µs)	4 kV		4 kV	
Dielectric Strength Contact-Coil (AC, 1 min)	1.5 kV		1.5 kV	
Dielectric Strength Open Contact	1 kV		1 kV	
Dielectric Strength Contact-Contact	1.5 kV		1.5 kV	
Ambient Operating Temperature	-25°C - +70°C		-25°C - +70°C	
Storage [illegible]perature	-40°C - +80°C		-40°C - +80°C	
Dim[illegible] W x H x L	31 x 73 x 97, Height from upper-edge of DIN 35 rail		31 x 73 x 97, Height from upper-edge of DIN 35 rail	
W[illegible]on	CAGE CLAMP®S		CAGE CLAMP®S	
Cro[illegible]	2 x 0.34 mm^2 - 2 x 1.5 mm^2/1 x 2.5 mm^2/22 - 16 AWG		2 x 0.34 mm^2 - 2 x 1.5 mm^2/1 x 2.5 mm^2/22 - 16 AWG	
[illegible]ed Le[illegible]	9 - 10 mm/0.37 in		9 - 10 mm/0.37 in	

Series 858, Relay Sockets with Industrial Relay

	Relay socket with industrial relay Coil voltage: 120 V AC 4 changeover contacts	Relay socket with industrial relay Coil voltage: 120 V AC 4 changeover contacts (gold contacts)

* In order to prevent the gold layer from being damaged, these values shall not be exceeded. Higher switching power leads to evaporation of the gold layer. The resulting deposits in the enclosure may cause sparkovers between the coil and the contact.

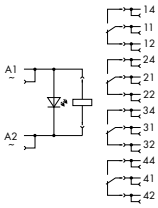

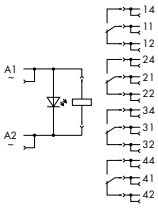

Description	Item No.	Pack. Unit	Item No.	Pack. Unit
Relay socket with industrial relay, for DIN 35 rail	**858-507**	1	**858-517**	1
Technical Data				
Coil				
Coil voltage	120 V AC		120 V AC	
Rated Power	1.2 VA		1.2 VA	
Coil Current	15 mA		15 mA	
Operating Range	0.8 - 1.1 x V		0.8 - 1.1 x V	
Holding Voltage	80% of V_N		80% of V_N	
Release Voltage	0.3 x V		0.3 x V	
Contacts				
Contact Material	AgCe		AgCe + 5 µm Au	
Continuous Current	5 A		50 mA*	
Inrush Current	15 A/4 s		15 A/4 s	
Max. Switching Voltage	250 V AC/ 30 V DC		30 V DC *	
Switching Power (Max.) AC1/AC15	1250 VA/300 VA		1250 VA/300 VA	
1-Phase Motor Load AC3	0.12 kW		0.12 kW	
Switching Current (Max.) DC1	5 A at 30 V DC		5 A at 30 V DC	
Min. Switching Load	12 V/100 mA		12 V/100 mA	
Switching Frequency Under Load	20 cycles/min.		20 cycles/min.	
General Specifications				
Mechanical Life	20 x 10^6 switching operations		20 x 10^6 switching operations	
Electrical Life	1 x 10^5 switching operations		1 x 10^5 switching operations	
Response Time/Drop-Out Time/Bounce Time (typ.)	25 ms/25 ms/4 ms		25 ms/25 ms/4 ms	
Nominal Voltage Acc. to VDE 0110 Part 1/4.97, IEC 60664-1	250 V/2.5 kV/2		250 V/2.5 kV/2	
Dielectric Strength Contact-Coil (1.2/50 µs)	4 kV		4 kV	
Dielectric Strength Contact-Coil (AC, 1 min)	1.5 kV		1.5 kV	
Dielectric Strength Open Contact	1 kV		1 kV	
Dielectric Strength Contact-Contact	1.5 kV		1.5 kV	
Ambient Operating Temperature	-25°C - +70°C		-25°C - +70°C	
Storage Temperature	-40°C - +80°C		-40°C - +80°C	
Dim[illegible] W x H x L	31 x 73 x 97, Height from upper-edge of DIN 35 rail		31 x 73 x 97, Height from upper-edge of DIN 35 rail	
W[illegible]	CAGE CLAMP®S		CAGE CLAMP®S	
[illegible]ros[illegible]ons	2 x 0.34 mm^2 - 2 x 1.5 mm^2/1 x 2.5 mm^2/22 - 16 AWG		2 x 0.34 mm^2 - 2 x 1.5 mm^2/1 x 2.5 mm^2/22 - 16 AWG	
[illegible]opped[illegible]	9 - 10 mm/0.37 in		9 - 10 mm/0.37 in	

Series 858, Relay Sockets with Industrial Relay

	Relay socket with industrial relay Coil voltage: 230 V AC 4 changeover contacts	Relay socket with industrial relay Coil voltage: 230 V AC 4 changeover contacts (gold contacts)

* In order to prevent the gold layer from being damaged, these values shall not be exceeded. Higher switching power leads to evaporation of the gold layer. The resulting deposits in the enclosure may cause sparkovers between the coil and the contact.

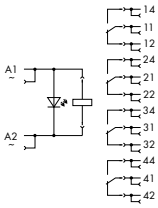

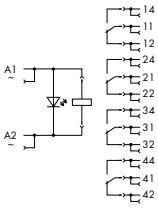

Description	Item No.	Pack. Unit	Item No.	Pack. Unit
Relay socket with industrial relay, for DIN 35 rail	**858-508**	1	**858-518**	1
Technical Data				
Coil				
Coil voltage	230 V AC		230 V AC	
Rated Power	1.2 VA		1.2 VA	
Coil Current	8.3 mA		8.3 mA	
Operating Range	0.8 - 1.1 x V		0.8 - 1.1 x V	
Holding Voltage	80% of V_N		80% of V_N	
Release Voltage	0.3 x V		0.3 x V	
Contacts				
Contact Material	AgCe		AgCe + 5 µm Au	
Continuous Current	5 A		50 mA*	
Inrush Current	15 A/4 s		15 A/4 s	
Max. Switching Voltage	250 V AC/ 30 V DC		30 V DC *	
Switching Power (Max.) AC1/AC15	1250 VA/300 VA		1250 VA/300 VA	
1-Phase Motor Load AC3	0.12 kW		0.12 kW	
Switching Current (Max.) DC1	5 A at 30 V DC		5 A at 30 V DC	
Min. Switching Load	12 V/100 mA		12 V/100 mA	
Switching Frequency Under Load	20 cycles/min.		20 cycles/min.	
General Specifications				
Mechanical Life	20 x 10^6 switching operations		20 x 10^6 switching operations	
Electrical Life	1 x 10^5 switching operations		1 x 10^5 switching operations	
Response Time/Drop-Out Time/Bounce Time (typ.)	25 ms/25 ms/4 ms		25 ms/25 ms/4 ms	
Nominal Voltage Acc. to VDE 0110 Part 1/4.97, IEC 60664-1	250 V/2.5 kV/2		250 V/2.5 kV/2	
Dielectric Strength Contact-Coil (1.2/50 µs)	4 kV		4 kV	
Dielectric Strength Contact-Coil (AC, 1 min)	1.5 kV		1.5 kV	
Dielectric Strength Open Contact	1 kV		1 kV	
Dielectric Strength Contact-Contact	1.5 kV		1.5 kV	
Ambient Operating Temperature	-25°C - +70°C		-25°C - +70°C	
Storage Temperature	-40°C - +80°C		-40°C - +80°C	
Dim[illegible] W x H x L	31 x 73 x 97, Height from upper-edge of DIN 35 rail		31 x 73 x 97, Height from upper-edge of DIN 35 rail	
W[illegible]	CAGE CLAMP®S		CAGE CLAMP®S	
[illegible]ro[illegible]	2 x 0.34 mm^2 - 2 x 1.5 mm^2/1 x 2.5 mm^2/22 - 16 AWG		2 x 0.34 mm^2 - 2 x 1.5 mm^2/1 x 2.5 mm^2/22 - 16 AWG	
[illegible]pped Le[illegible]	9 - 10 mm/0.37 in		9 - 10 mm/0.37 in	

Series 858, Relay Sockets for Industrial Relay

	Relay socket for industrial relays 2 and 4 changeover contacts	

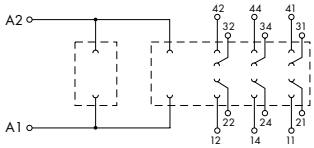

Note: Inductive loads have to be attenuated by an appropriate protective circuit in order to protect relay coils and contacts.

Description	Item No.	Pack. Unit	Item No.	Pack. Unit
Relay socket for industrial relays, for DIN 35 rail	**858-100**	1		

Technical Data

Nominal Input Voltage (V_N)	Depending on relay; max. 250 V AC	
Max. Switching Voltage	250 V AC	
Max. Continuous Current	4 x 8 A (4 changeover contacts);	
	2 x 12 A (2 changeover contacts)	
Max. Switching Power (resistive)	4000 VA AC	
Nominal Operating Mode	Conitouous duty	
Voltage Resistance	4 kV (depending on relay)	
Nominal Voltage Acc. to VDE 0110 Part 1/4.97, IEC 60664-1	250 V/4 kV/3	
Degree of Protection	IP 20	
Ambient Operating Temperature	-25°C - +70°C (depending on relay)	
Storage Temperature	-40°C - +80°C	
Dimensions (mm) W x H x L	31 x 38 x 97, Height from upper-edge of DIN 35 rail	
Wire Connecion	CAGE CLAMP®S	
Stripped Lengths	9 - 10 mm/0.37 in	
Cross Sections	2 x 0.34 mm^2 - 2 x 1.5 mm^2/1 x 2.5 mm^2/22 - 16 AWG	
Standards/Specifications	IEC60664/IEC60664A/DIN VDE0110	
	Degree of pollution 2	
	Overvoltage category 2	

Series 858, Accessories for Relay Socket

	Pluggable industrial relays 4 changeover contacts with integrated LED and recovery diode and manual operation	Pluggable industrial relays 4 changeover contacts with integrated LED and manual operation

* In order to prevent the gold layer from being damaged, these values shall not be exceeded. Higher switching power leads to evaporation of the gold layer. The resulting deposits in the enclosure may cause sparkovers between the coil and the contact.

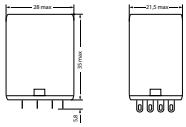

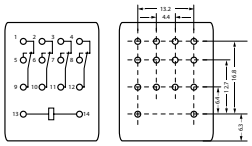

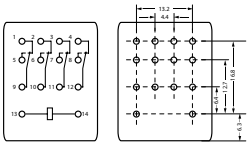

Description	Nominal Input Voltage (V_N)	Item No.	Pack. Unit	Nominal Input Voltage (V_N)	Item No.	Pack. Unit
Pluggable Industrial Relay	24 V DC	**858-150**	1	240 V AC	**858-151**	1
	24 V DC*	**858-152**	1	240 V AC*	**858-153**	1

Technical Data

Coil		
Coil voltage	24 V DC	240 V AC
Rated Power	0.9 W	1.2 W
Coil Current	36.9 mA	8.3 mA
Operating Range	0.8 - 1.1 x V	0.8 - 1.1 x V
Holding Voltage	50% of V_N	80% of V_N
Release Voltage	0.1 x V	0.3 x V
Contacts		
Contact Material	AgCe, AgCe + 5 µm Au*	AgCe, AgCe + 5 µm Au*
Continuous Current	5 A*	5 A*
Inrush Current	15 A/4 s	15 A/4 s
Max. Switching Voltage	250 V AC/ 30 V DC	250 V AC/30 V DC *
Switching Power (Max.) AC1/AC15	1250 VA/300 VA	1250 VA/300 VA
1-Phase Motor Load AC3	0.12 kW	0.12 kW
Switching Current (Max.) DC1	5 A at 30 V DC	5 A at 30 V DC
Min. Switching Load	12 V/100 mA	12 V/100 mA
Switching Frequency Under Load	20 cycles/min.	20 cycles/min.
General Specifications		
Mechanical Life	20 x 10^6 switching operations	20 x 10^6 switching operations
Electrical Life	1 x 10^5 switching operations	1 x 10^5 switching operations
Response Time/Drop-Out Time/Bounce Time (typ.)	25 ms/25 ms/4 ms	25 ms/25 ms/4 ms
Nominal Voltage Acc. to VDE 0110 Part 1/4.97, IEC 60664-1	250 V/2.5 kV/2	250 V/2.5 kV/2
Dielectric Strength Contact-Coil (1.2/50 µs)	4 kV	4 kV
Dielectric Strength Contact-Coil (AC, 1 min)	1.5 kV	1.5 kV
Dielectric Strength Open Contact	1 kV	1 kV
Dielectric Strength Contact-Contact	1.5 kV	1.5 kV
Ambient Operating Temperature	-25°C - +70°C	-25°C - +70°C
Mo[illegible]ance in a Row	6 mm	6 mm
W[illegible]	approx. 37 g	approx. 37 g

Series 858, Accessories

Description	Item No.	Pack. Unit
Holding Bracket for Industrial Relays	**858-110**	8

Description	Item No.	Pack. Unit
Push-In Type Jumper Bar	**858-402**	200

Description	Power Consumption at V_N	Item No.	Pack. Unit
Status Indication*	2.4 mA	**788-120**	1
	1.9 mA	**788-121**	1
	1.9 mA	**788-122**	1
	2.1 mA	**788-123**	1
	1.7 mA	**788-124**	1
	1.6 mA	**788-125**	1

*Only required when using relays without integrated operating indicator.

DATASHEET

AVEVA™ InTouch HMI
formerly Wonderware

The World's #1 HMI

AVEVA InTouch HMI, formerly Wonderware powers more than 100,000 plants and factories around the world, helping to achieve world-class performance, reduce costs and improve product quality.

AVEVA InTouch HMI goes far beyond the ordinary HMI to deliver:

- Legendary ease of use
- Unlimited web and mobile access
- HMI that works everywhere
- 30-year history of protecting your engineering investment
- Native cloud integration for engineering efficiency and collaboration

Visualize, Control and Optimize Your Operations

The more complex your operations become, the more you need a common-sense, real-time view of your business. AVEVA InTouch HMI empowers innovators from around the world with the ability to standardize and visualize their entire enterprise.

Let AVEVA InTouch HMI take you beyond simplistic graphics to create meaningful content that will drive enterprise-wide operations productivity and cost savings.

AVEVA InTouch HMI empowers operators to optimize routine human interactions with industrial automation systems. Our unique situational awareness libraries provide operators the contextualized information they need to address abnormal situations quickly and accurately — before they impact operations. The result is a quantifiable net increase in operator effectiveness, improving operator interpretation time by up to 40%.

What's New in the 2020 Release?

InTouch Unlimited - Technical and Commercial Flexibility like never before

InTouch Unlimited is a new offer. InTouch Unlimited is more than just a new commercial model. It offers customers new value and architectural flexibility never offered before.

This capability addresses the need for cost efficient enterprise-wide accessibility. Now every company can access the most powerful HMI software in the market without having to compromise your standard.

The powerful features include:

- Unlimited read-write clients; including web-based, native mobile and RDS clients
- Un-restricted IO
- Industrial strength Historian with web reporting
- Development tools
- IO communication drivers
- Redundancy
- Native cloud support
- Built-in technical support & version updates

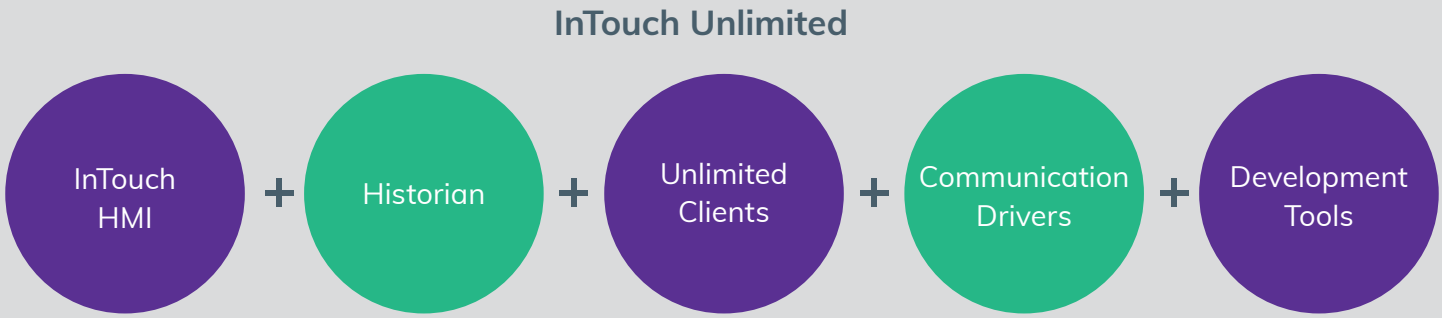

Modernization of stand-alone InTouch Applications

This new release presents thousands of new and legacy InTouch users opportunity to benefit from modernization through Industrial Graphics, richer animations, multi-touch, web access and more! This release brings the power of Industrial Graphics and frame windows to all InTouch HMI legacy users. This is foundational to deliver stand-alone InTouch applications in a web browser using InTouch Web Client. Moreover, this will provide the familiar WindowViewer-like experience across web browsers.

Seamlessly convert existing native InTouch windows to Industrial Graphics with one click.

Also, this latest release no longer requires installation of SQL Server to use Industrial Graphics in standalone applications. This drastically improves the performance of installing the product, creating new applications, opening, launching and saving applications and provides the ability to distribute InTouch HMI applications by simply copying the application folder across machines.

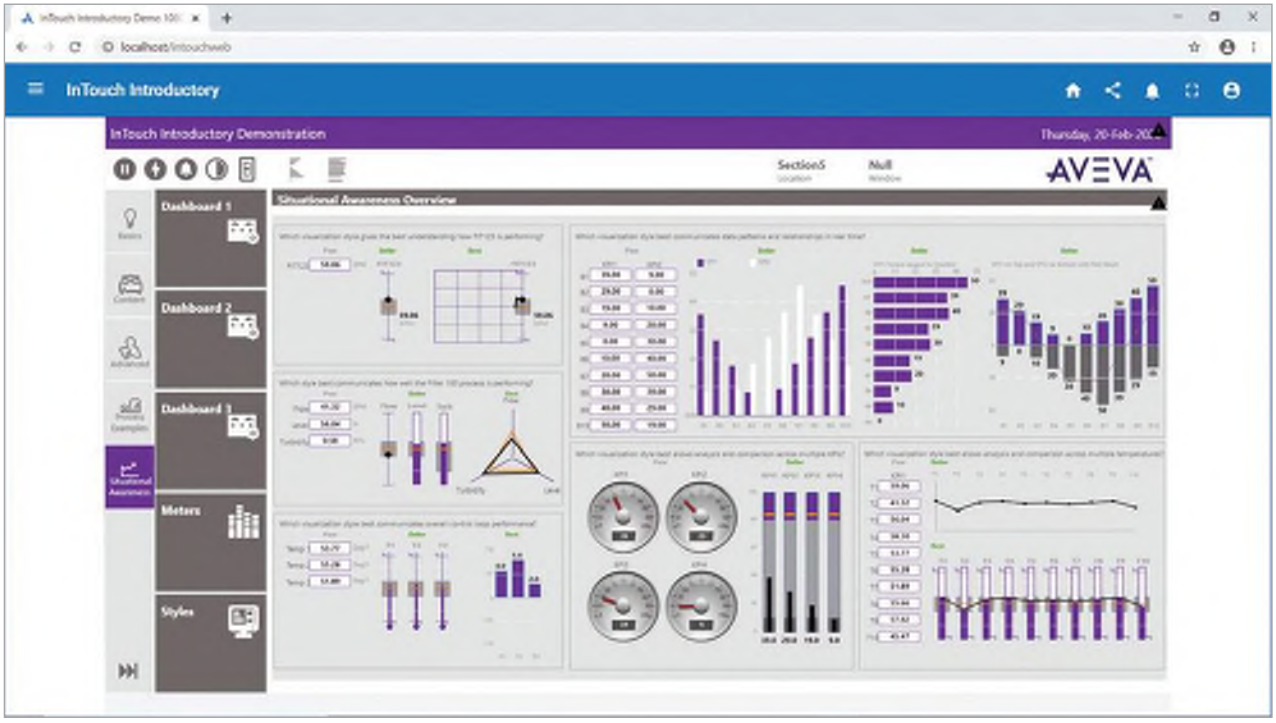

Native integration of InTouch to AVEVA Historian, formerly Wonderware

AVEVA InTouch HMI supports a high-performance native interface to historize InTouch tags to the AVEVA Historian.

You can choose between archiving data to the traditional local historical log file (*.lgh file), to the AVEVA Historian, or to both! Additionally, this functionality provides store and forward capability when historizing.

AVEVA Historian automatically calculates historical summary data (average, minimum, maximum, standard deviation, and time duration in a particular state). This aggregated information can easily be displayed in InTouch HMI which greatly enhances the operators' situational awareness.

Leverage the Cloud for enterprise-wide Collaboration

AVEVA InTouch HMI 2020 delivers tighter integration to AVEVA Connect, namely:

- AVEVA Cloud Insight, our historian in the cloud
- AVEVA Cloud Integration Studio which now offers AVEVA Drive cloud storage.

The Insight publisher can be accessed from InTouch Application Manager and InTouch WindowMaker, making it easy for users to send tag configuration and data from an InTouch application to AVEVA Cloud Insight for operational reporting, charting and dashboarding.

In addition, InTouch WindowMaker integrates to the AVEVA Drive, which allows HMI designers to share Industrial Graphics across teams and sites further empowering engineering efficiency and roll out of graphical standards across an organization.

HMI builders can continue to design Industrial Symbols locally, then when ready drag and drop symbols to cloud storage making them instantly available to others. Graphics in the cloud can be used and edited by other users. This provides a powerful way for users to maintain and share their standards across teams and sites.

Native Mobile Apps for Android and iOS

Remote and local operators experience the same look and feel on tablets and smart phones with support for touch centric pan and zoom functionality including ability to write back and acknowledge alarms.

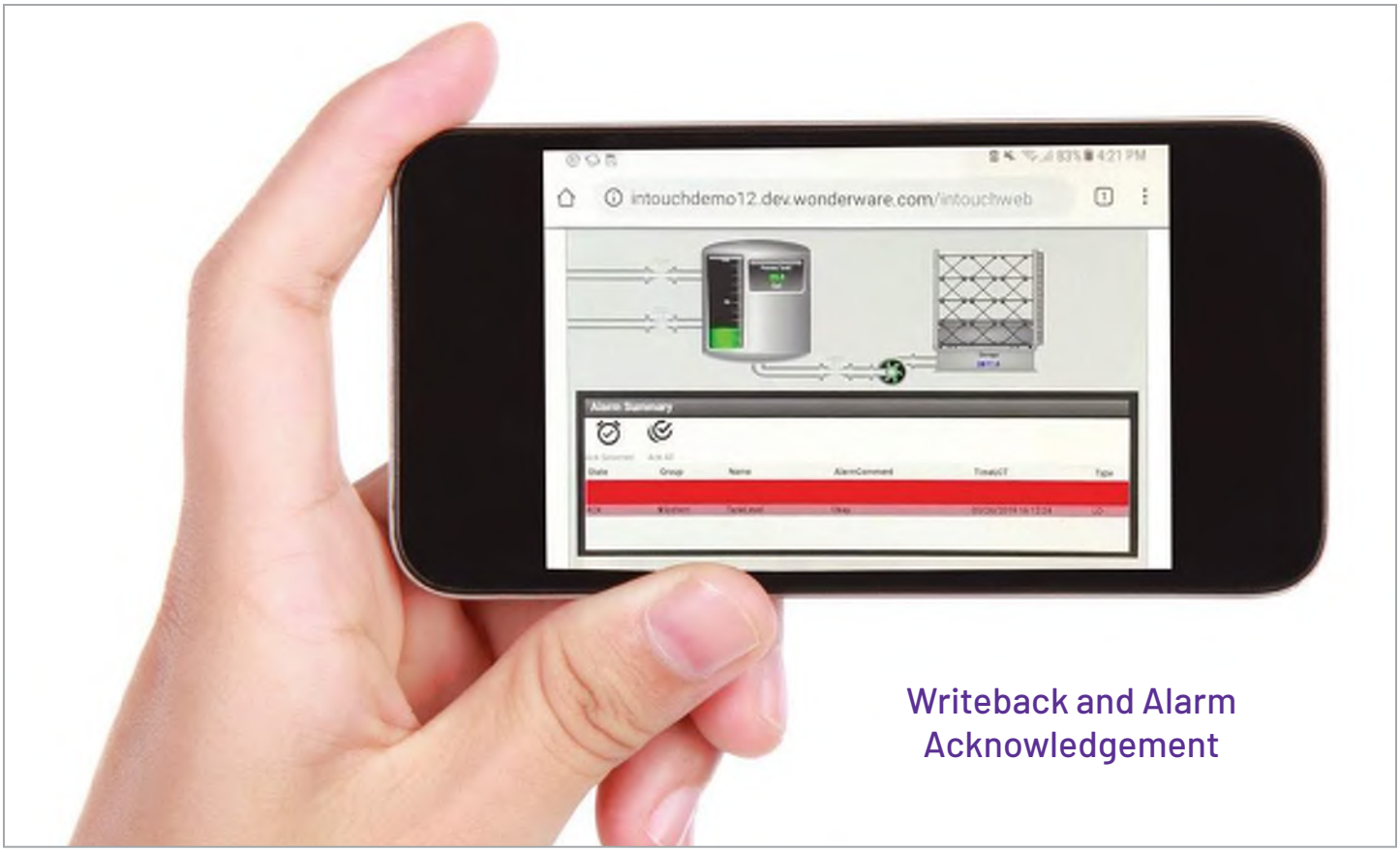

Writeback and Alarm Acknowledgement

Carousel HTML5 Widget

AVEVA InTouch HMI 2020 introduces support for web widgets, which are reusable controls designed with web technology. The first web widget shipped with the product is the carousel widget. The carousel widget enriches AVEVA InTouch HMI and the InTouch Web Client enabling sequential display of a selected set of graphics, automatically rotating them at a configurable predefined interval. Think of it as a “slide show” of symbols.

This has multiple uses but it is perfect, for example, for use with Smart TVs with built-in web browsers or wall mounted display monitors where you need to rotate between multiple producton dashboards with KPIs or operational information on a periodic interval.

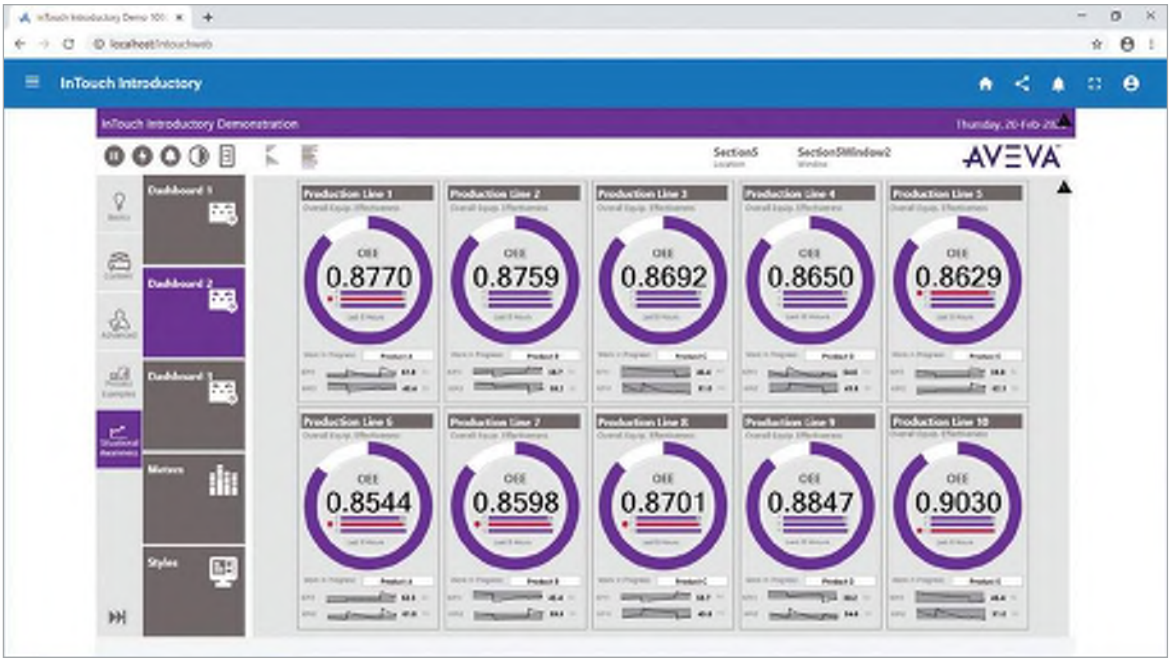

New Application Manager: Modern UI and workflow improvements

InTouch HMI introduces a new Application Manager. But it's far more than just a change in look. Existing workflows have been improved and new ones added.

Three different views are available: A list view, a tiled view and a detailed view (classic).

The new list and tiled views give better visibility to the details of InTouch HMI applications and make several operations available directly from the tiles. Workflow improvements include for example, streamlining the application creation process which reduces 9 steps to only 2.

New InTouch Tag Server Client License

A common architecture is that of a Tag Server architecture. This new license will allow WindowViewer to run and only connect to a remote InTouch Tag Server, as a 'Tag Server Client'.

This is an extension of the InTouchView Application licensing which will now allow users to choose between "System Platform Galaxy" or "InTouch Tag Server" as the remote data source. This enables more cost-effective solution for tag server applications where there is no need for local IO connectivity, alarming, etc.

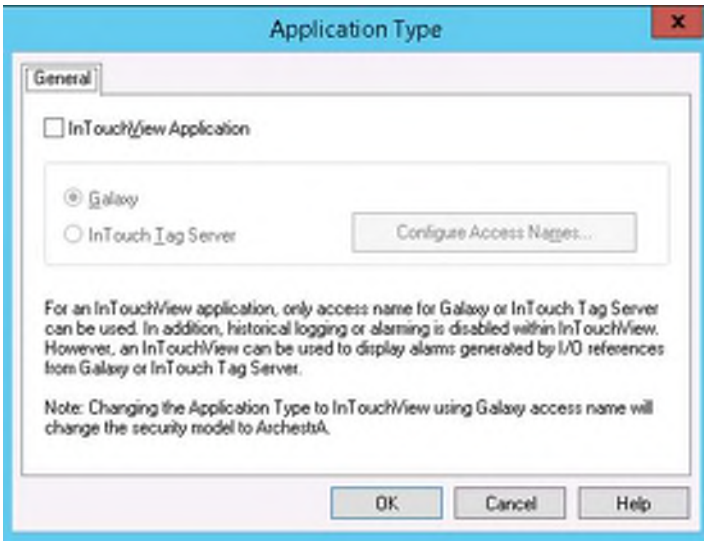

Features & Functionality of AVEVA InTouch HMI

Access from Any Device, Anywhere, Any Time

AVEVA offers the most comprehensive portfolio of secure, web-based visualizations of your real-time automation solutions including InTouch Web Client and AVEVA InTouch Access Anywhere. From full high fidelity remote real-time control to casual real-time production monitoring are now at your fingertips leveraging any HTML5-compliant web browser with zero client installation, zero maintenance! Moreover, the world's favorite HMI is also fully mobile and works natively on tablets and smartphones. InTouch Web is ideal for following:

- Mobile Operators and Business Management
- Read Only or Read Write
- TVs / wall mounted monitors around plant facility
- Embedding of HMI Graphics in Business Enterprise Portals
- Runs on both Microsoft Windows Server or Workstation OS

In addition, for remote operators, InTouch Access Anywhere is an extension to InTouch that provides industry's most secure access to InTouch applications via any HTML5-compliant web browser. It enables users to securely monitor, control and troubleshoot plant equipment or process from any location, on any device, at any time.

- Remote Operators with Full Process Control
- Read Only or Read Write
- High fidelity access to entire InTouch Application including scripts/.NET & Active X controls
- Ideal for use beyond DMZ using Secure Gateway
- Runs only on Microsoft Windows Server

Versatility and Extensibility through Open Standards

InTouch is an open and extensible HMI with intuitive graphical animation and scripting capabilities that provide incredible power and flexibility for application designers. InTouch HMI offers the ability to use vector graphics, bitmap graphics, library symbols, .NET controls and legacy ActiveX controls. Industrial Graphics support embedded .NET controls, giving you the freedom for unrestricted application extensibility without programming.

InTouch HMI allows you to connect to any device or back-end system by using standard interfaces, such as OPC UA, OPC DA, SQL, SOAP, HTTP/S, .NET for external connectivity. Open connectivity allows real-time plant data to become integral part of business.

Situational Awareness for Operator Effectiveness

InTouch HMI has an extensive library of graphical symbols, wizards, templates and elements that provides rich user experience and high contextualization. The graphics have built-in quality processing and diagnostic indication, enabling you to rapidly determine root causes of abnormal situations. Millions of preconfigured and pretested combinations and orientations of symbols are available making this the largest graphics library on the planet.

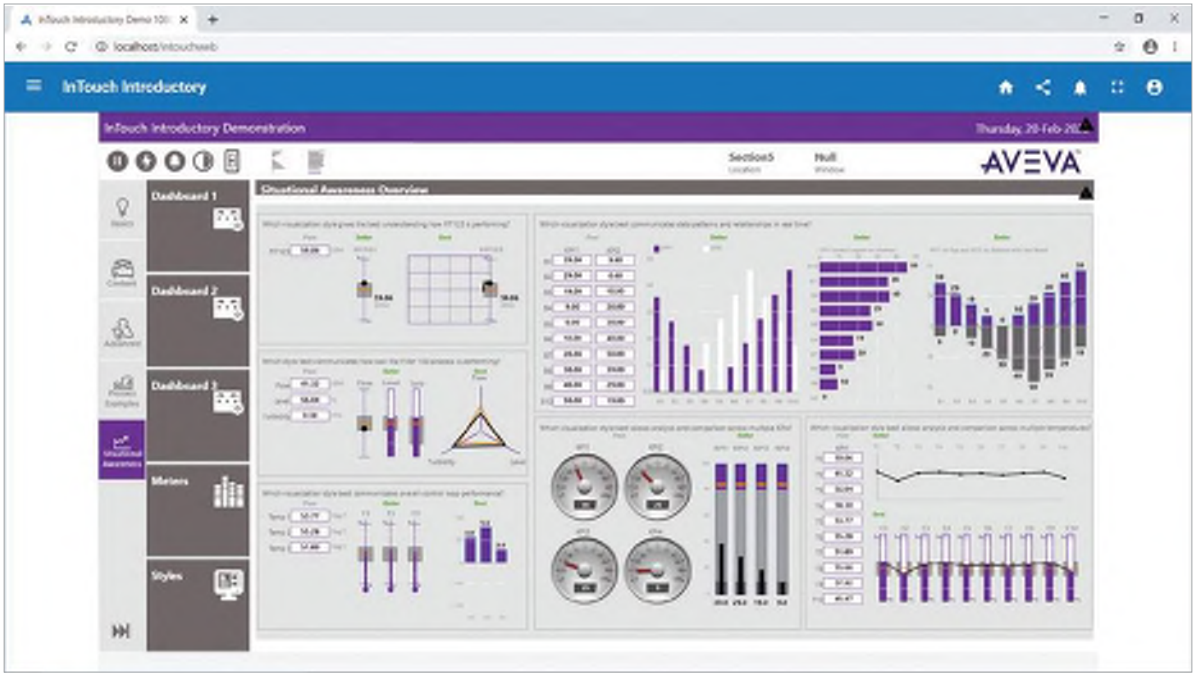

The Situational Awareness Library of Industrial Graphics is AVEVA's unique approach to presenting actionable information in less time to operators. Library symbols may be used out-of-the-box or customized as needed. You may add your own new or modified symbols, or you may create your own special libraries of symbols to suit your engineering and development requirements.

- Dashboard Symbols
- Alarm Symbols
- Trend Symbols
- Equipment Symbols
- Input Symbols
- Instrumentation Symbols
- Status Symbols
- Advanced Symbols – Polar Star
- Equipment Symbols – Valves, Agitator, Tank
- Many other Symbols – Level Meter, Hand Switch, Output Bar, etc.

One of the advanced Symbol Wizards is the Polar Star which shows a set of related process values on 'spokes' that form a visual polygon. As values change along the length of the spokes, the changing shape of the polar star's polygon is easily recognizable by operators who can react quickly to abnormal process conditions. Each spoke contains a set of custom properties to set value set points, alarm limits, and coordinate set point locations for the normalized process value. When a process value changes from its set point location on a spoke, the animation changes the shape of the polar star polygon.

Alarm Annunciations: Alarm Annunciations are 'Triple Coded' to convey critical information in three ways: Color, Shape, and Text. This ensures unambiguous interpretation of alarms for faster operator reaction time and fewer mistakes. Color coded Alarm border animations around graphics clearly indicate the level of alarm state to help operators quickly identify abnormal situations and take corrective action in the proper order of priority. Alarm border animations can be configured to blink, remain solid, or change based on UnAcked, Acked, or return to normal situations. Severity Levels indicated by unique shape, color, and level number are displayed directly next to a Symbol for quick, clear, concise information contextualization. These animation capabilities are delivered fully configured and fully functional and require no scripting.

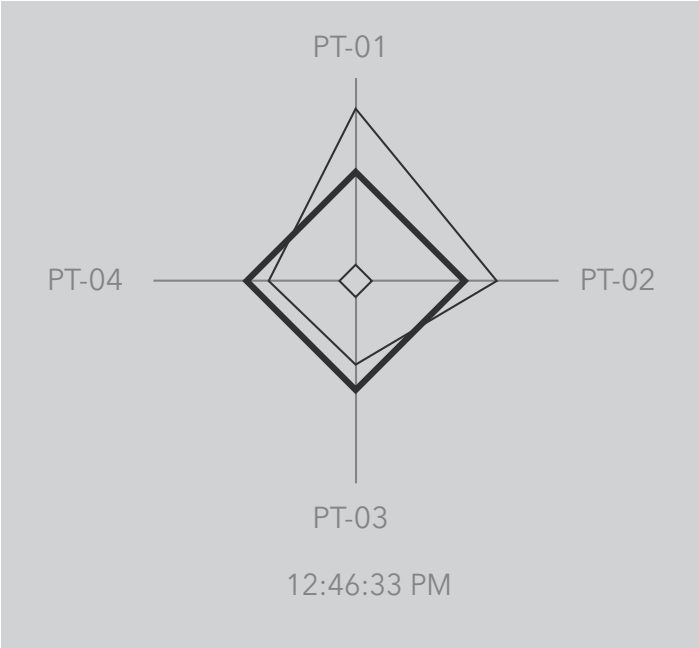

Polar Star - abnormal

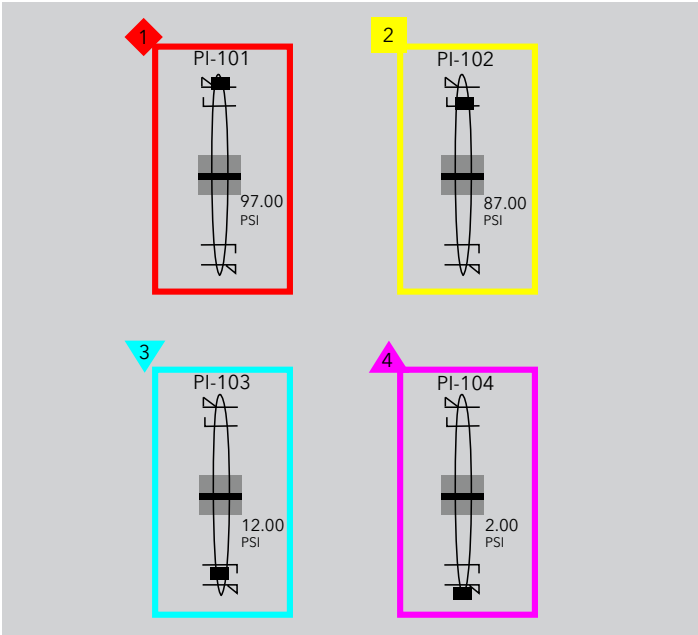

Triple coded for faster Operator reaction and prioritization

Trend Pen: Easy to configure, Single Pen and Multi-Pen Trend Symbols provide not only a current data value but also the recent data historical trend in a specific absolute fixed time range or in a moving window time range, enabling an operator to instantly distinguish recent activity and dramatically improve predictability of potential future events and handling issues before they become full alarms or events.

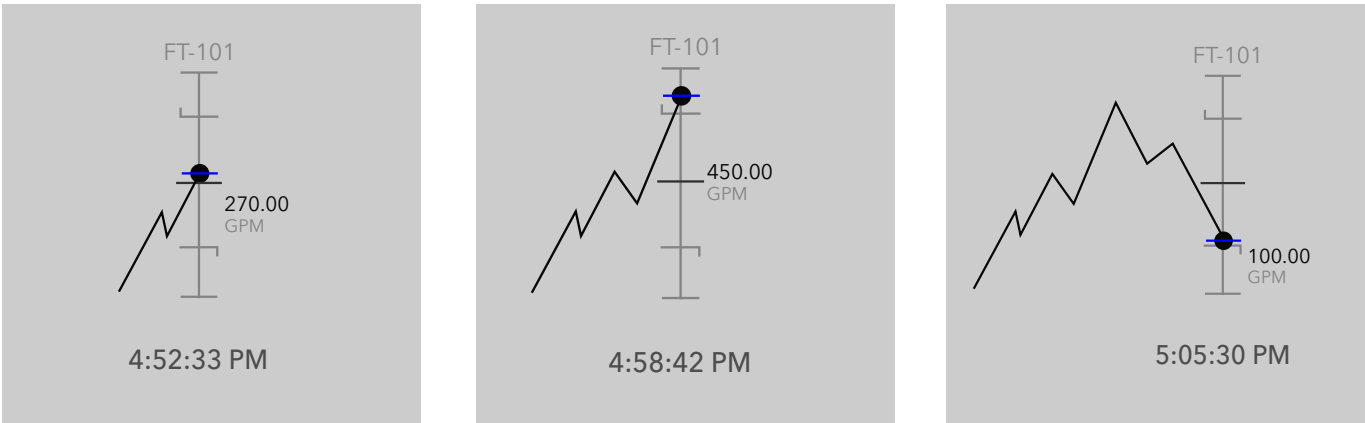

Three snapshots over time of a Trend Pen

Connection Points and Connectors: Every HMI design includes graphic elements and connectors between elements, such as a pipe, wire, or line. Much of the design time goes into connecting graphic elements to one another. For most HMIs, this connecting can be a tedious effort and can prove especially frustrating when graphics are repositioned in the design phase or even if the graphic is required to move at runtime as a result of animation. Connection Points and Connectors provide resilient connections between graphics with simple point, click, drag and drop operations. With these new features, whenever graphics are repositioned, either in design or runtime, the Connectors adjust and move with the graphics to maintain the connections.

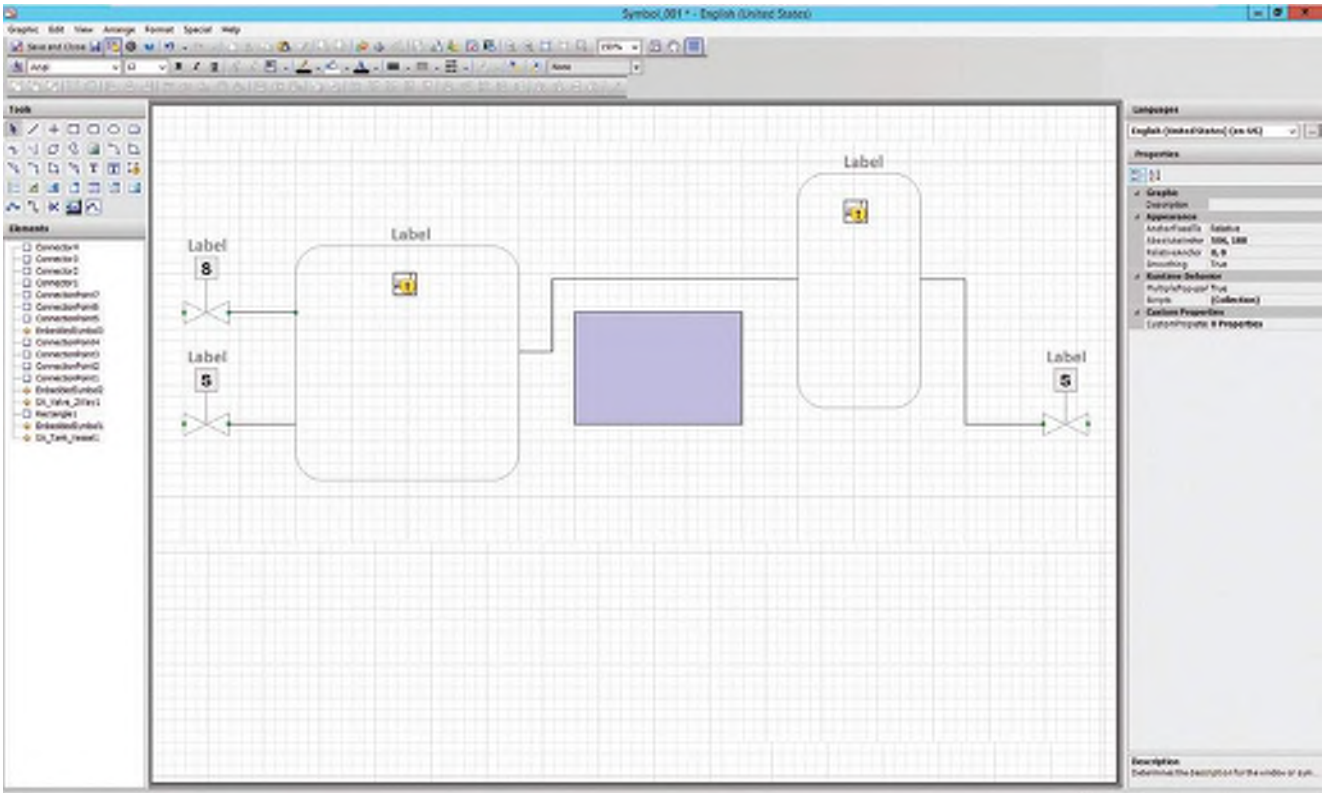

Breakthrough Advanced Engineering Tools

Design, distribute and enforce graphical component standards for greater application consistency and optimized application design and maintenance using Element Styles, Numeric Formatting, and graphic protection. Shorten initial and maintenance design phases using graphic template change propagation which enables engineers to make a change once and propagate it throughout the entire application.

Resolution Independence

In a world where more devices of diverse form factors abound, users more often find the need to design applications of uncommon sizes or simply to design an application for displays the designer has no access to. InTouch now allows users to design applications in a target resolution different from the development machine.

Resolution independent graphics can be resized or stretched without losing original visual quality. This improves window display performance, and can be designed in one resolution and reused without distortion in a different resolution.

Element Styles

Element Styles ensure a customer-defined HMI look and feel across the enterprise regardless of whom or when it was designed. Typically, HMI applications are developed over time and by many engineers, which could lead to inconsistent standards, use of colors, text, and alarm or event indicators. Element Styles ensure a customer defined HMI look and feel across the enterprise regardless of whom or when it was designed. Every screen across the enterprise can have the same methodology for presenting information in context so that any operator in any plant will understand information in the same consistent manner. Create standardized colors, indicators, text formats, and more to improve operator training, reduce operator confusion, and enable operators to more quickly orient to the critical information without the need for interpretation. All this is engineered and managed in a single user-friendly Element Styles Editor tool.

Using the centralized management and deployment capability, one click can update your applications globally.

Symbol Wizards

Symbol Wizards enable engineers to choose custom configuration options such as graphical elements, scripts, and custom properties and automatically assemble them into a single composite symbol. Composite symbols with multiple configurations reduce the number of required Symbols that need to be created for an application.

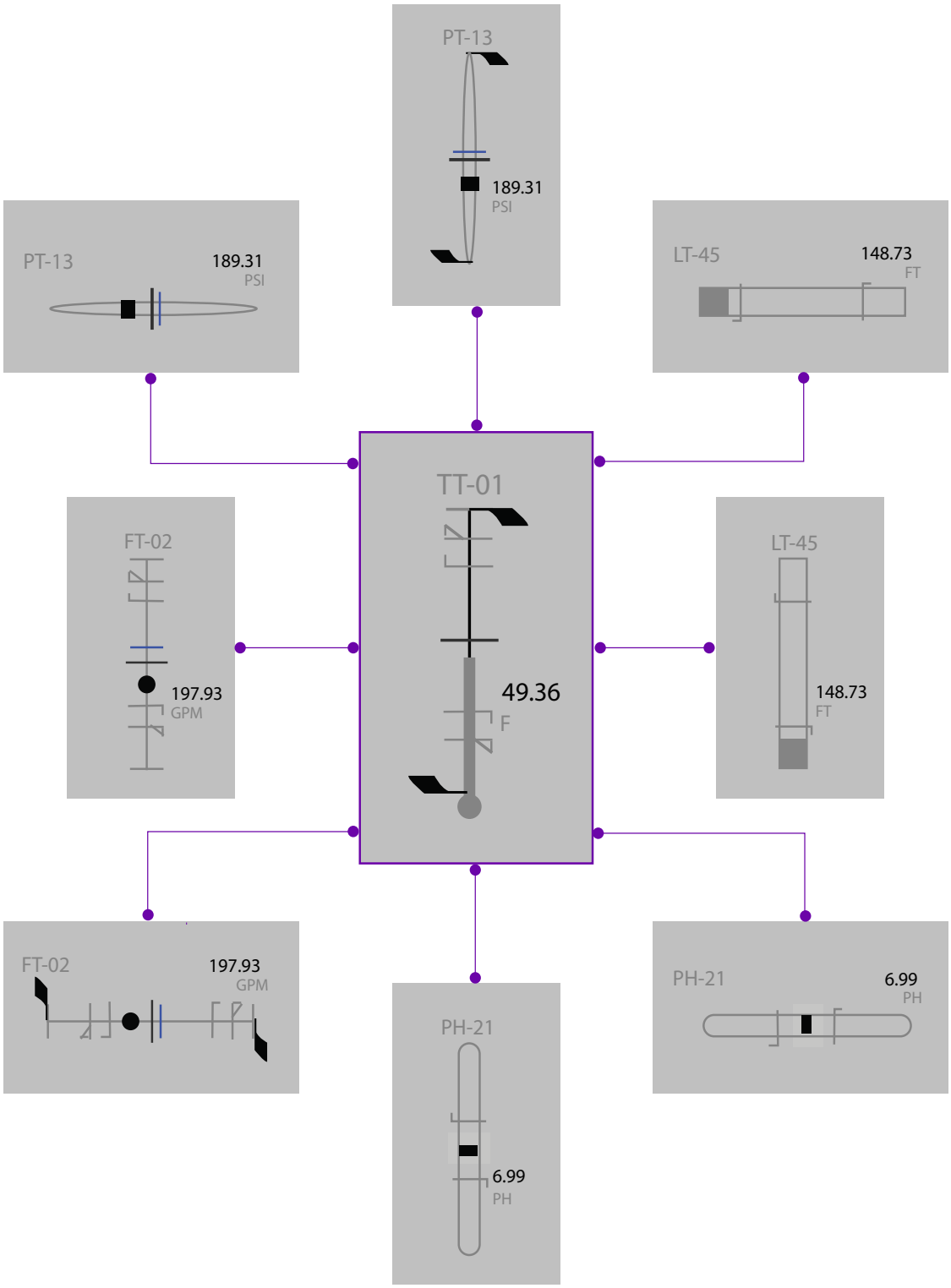

Each symbol Wizard can be easily configured into many different visual and functional symbols

XML Import or Export

XML Import or Export Capability: Expanding further upon our Open Format philosophy, InTouch HMI supports publishing of graphic elements in an open format schema to support the programmatic import and export of graphic elements and most animations with advanced editors. Pull third party graphics such as CAD drawings directly into your HMI saving time and maintaining complete integrity of the original graphic.

Application Templates

Another great productivity tool, Application Templates allow users to start the design of a new HMI application from a base template instead of starting from scratch, saving hours and hours of engineering. Application Templates can be as simple as a navigation framework or as rich as the user desires.

System Integrators can reuse their engineering in multiple projects, OEMs can deliver base applications to their end users, and new users can get started in a shorter time.

Application Templates can be selected via a template browser which provides a thumbnail preview of the templates. Users can organize Application Templates in a folder structure of their choice, by resolution, by industry, by customer, by engineering team, etc. A number of Application Templates are available out-of-the-box. Users can create their own Application Templates.

Window Templates

InTouch windows can now be defined as templates so new windows can be created from them and inherit window properties, content and scripts; another productivity feature that helps save engineering time.

Scripting

The software supports both simple and advanced scripting and offers hundreds of in-built script functions. Recent enhancements include auto-complete in Script Editors and Graphic Editor Expressions, line numbering, multi-level undo-redo, automatic syntax checking, consistent color coding in line highlighting, syntax error indication.

Security & Reliability

Microsoft Windows Authentication – grants permissions to InTouch HMI users authenticated on a domain controller or local computer, based on user identity and group affiliations.

Encrypted web communications support for SSL & HTTPS.

Access-Level Password Security – limits user capabilities in the InTouch HMI application based on areas of responsibility and authority.

FDA traceability electronic signature security supports Secured and Verified Writes in conformance with 21CFR11 establishing different users to secure and verify an action. In addition, users can enter a comment when performing the secured and verified write.

Ability to Run InTouch as a Windows service (Faceless), typical use is in tag server architecture.

Localization

InTouch HMI is fully supported in English, German, French, Japanese and Simplified Chinese. It offers localized development environment to enable non-English speaking engineers to design and develop HMI applications in their native language.

Language Assistant — Great for OEMs, SIs, Global Customers: An Excel Add-in that improves the management and accuracy of off-line HMI language translation and accelerates the execution and delivery of projects using the Runtime Language Switching capabilities in InTouch. Benefits include more efficient translation projects that result in improved translation accuracy and consistency, reduced costs and faster project deliverables.

Enhanced User Experience

Rich Animations

InTouch HMI includes the ability to animate many of the Graphics and Element Styles. Graphic animations are directly linked to real-time data values to dynamically reshape the multi-point Graphic elements as data changes. This animation capability automates high level geometric mathematical formulas to enable engineers to create animated Pie Charts, Polar Stars, Polylines, Curves, Polygons, and Closed Curves that visually reshape in real-time. Direct, indirect, and associated relationships of multiple data points can be visually represented in a graphic to enable operators to clearly understand when a process is within acceptable boundaries or which part of the process is out of alignment or possibly moving out of alignment.

Pan and Zoom

Pan and Zoom provides a simple, intuitive way to interact with your visualization applications in a modern multi-touch hardware environment. Pan and zoom can also be enjoyed using keyboard and mouse in addition to a multi-touch interface. Zoom level is also accessible programmatically, enabling powerful tasks such as application clutter/de-clutter and more.

InTouch, Simply the best HMI Investment!

With over thirty-year history of never leaving any customer behind, InTouch consistently provides seamless upgrade path year over year that protects customer's investments in InTouch applications. With this latest release, an InTouch application implemented decades ago can still run, unchanged, without re-engineering application in a modern user experience! Simply the best HMI investment you can make.

Value-add cloud capability provides ability to develop applications, analyze production data and improve operations without incurring IT on-premise costs. Whether you are ready to migrate to a cloud environment today, or you simply want the flexibility to do so in the future, AVEVA Flex subscription provides the underlying infrastructure to make that transition when you are ready.

Technical Specification

Client OS (64 bit) - InTouch HMI 2020, InTouch Web Server 2020

- Windows 8.1 Pro and Enterprise
- Windows 10 1803 Pro, Enterprise, and IoT Enterprise
- Windows 10 1809 Pro, Enterprise, and IoT Enterprise
- Windows 10 1903 Pro, Enterprise, and IoT Enterprise
- Windows 10 1909 Pro, Enterprise, and IoT Enterprise
- Windows 10 Enterprise 2016 LTSB
- Windows 10 Enterprise 2019 LTSC
- Windows 10 IoT Enterprise 2016 LTSB
- Windows 10 IoT Enterprise 2019 LTSC

Server OS (64 bit) - InTouch HMI 2020, InTouch Web Server 2020, InTouch Access Anywhere 2020

- Windows Server 2012 Data Center (Not Standard Edition)
- Windows Server 2012 R2 Embedded (64-bit) (Full image)*
- Windows Server 2012 R2 Standard and Data Center
- Windows Server 2016 LTSC Standard and Datacenter
- Windows Server 2019 LTSC Standard and Data Center (Desktop Experience)
- Windows Server IoT 2016 LTSB
- Windows Server IoT 2019 LTSC

* InTouch Access Anywhere Server and Secure Gateway not supported on Windows Server 2012 R2 Embedded

For more information on AVEVA InTouch HMI please visit:
sw.aveva.com/monitor-and-control/hmi-supervisory-and-control/intouch-hmi-standard-edition

AVEVA

Copyright © 2020 AVEVA Group plc and its subsidiaries. All rights reserved.
All product names mentioned are the trademarks of their respective holders.

aveva.com

650 Suffolk Street ▪ Lowell ▪ Massachusetts ▪ 01854
Ph: 978-937-5300 Fax: 978-937-2126
Email: pvandergraaf@qmation.com; www.qmation.com

"Helping companies attain their Continuous Process Improvement goals"

Specifications Series E Box PC STANDARD:

Specifications

System Hardware	
Processor	Intel® Celeron™ G4900T Processor
Cores / speed	2 / 2.90 GHz
Memory / # of slots	1 x 4 GB DDR4 2400MHz SO-DIMM, configurable up to 32 GB/2 slots
Graphics / video	Intel HD graphics; DirectX 12, OpenGL, and 4K videos Quick Sync encoder
Drives	
Mass storage	1 x U.2 Slot (PCI-E Gen 3.0 x4, SATA 3.0) 256GB 2.5" SATA SSD pre-installed
Secondary storage	64 GB M.2 2242 SATA interface SSD
Operating system	Windows 10 Pro/Windows 10 IoT Enterprise LTSC
Packages / bundles	Packages with AVEVA InTouch, ready-to-use HMI software (optional)
Power rating	Current supply 9-36 VDC, 6.8-1.72 A
Housing	Aluminum heatsink (with heatpipes) + steel chassis
Mounting option	Wall mount
Dimension & Weight	
Dimensions (W x H x D)	265.2 x 250 x 81.5 mm
Product weight (kg / lb)	Net weight: 4.5 kg / 10 lbs, Gross weight: 6.7 kg / 15 lbs

Interface Ports	
Ethernet	2 x Ethernet TCP/IP - RJ45 with Teaming (Intel I210)
USB	4 x USB 3.0
Serial	1 x RS-232/422/485 (selected by BIOS)
Secondary display connector	1 x USB Type-C (power, DP ALT mode, and touch)
Graphics / video	1 x DisplayPort 1.3
Audio	1 x Line-in, 1 x Line-out
Internal expansion slot	1 x E-Key M.2 for WiFi/BT module (optional)
Internal expansion slot	1 x B-Key M.2 for 4G/5G module (optional)
Environment / Ambient Conditions	
Degree of protection	Front: IP65
Electromagnetic compatibility	CE, FCC A, EN 61000-6-4, EN 61000-6-2, CISPR22, RoHS
Vibration (operation)	Tested according to DIN IEC 60068-2-64: 5 - 500 Hz: 1 Grms
Shock (operation)	Tested according to DIN IEC 60068-2-27: 15 gn for 11 ms
Ambient temperature	0...50°C (32...122°F)
Relative humidity	10% to 90% at 25°C (no condensation)
Certifications / regulations	UL/cUL/CB 62368, UL/cUL/CB 61010, IP65
Contractual Warranty	
Period	24 months

650 Suffolk Street ▪ Lowell ▪ Massachusetts ▪ 01854
Ph: 978-937-5300 Fax: 978-937-2126
Email: pvandergraaf@qmation.com; www.qmation.com

"Helping companies attain their Continuous Process Improvement goals"

Series E Box PC STANDARD Dimensions

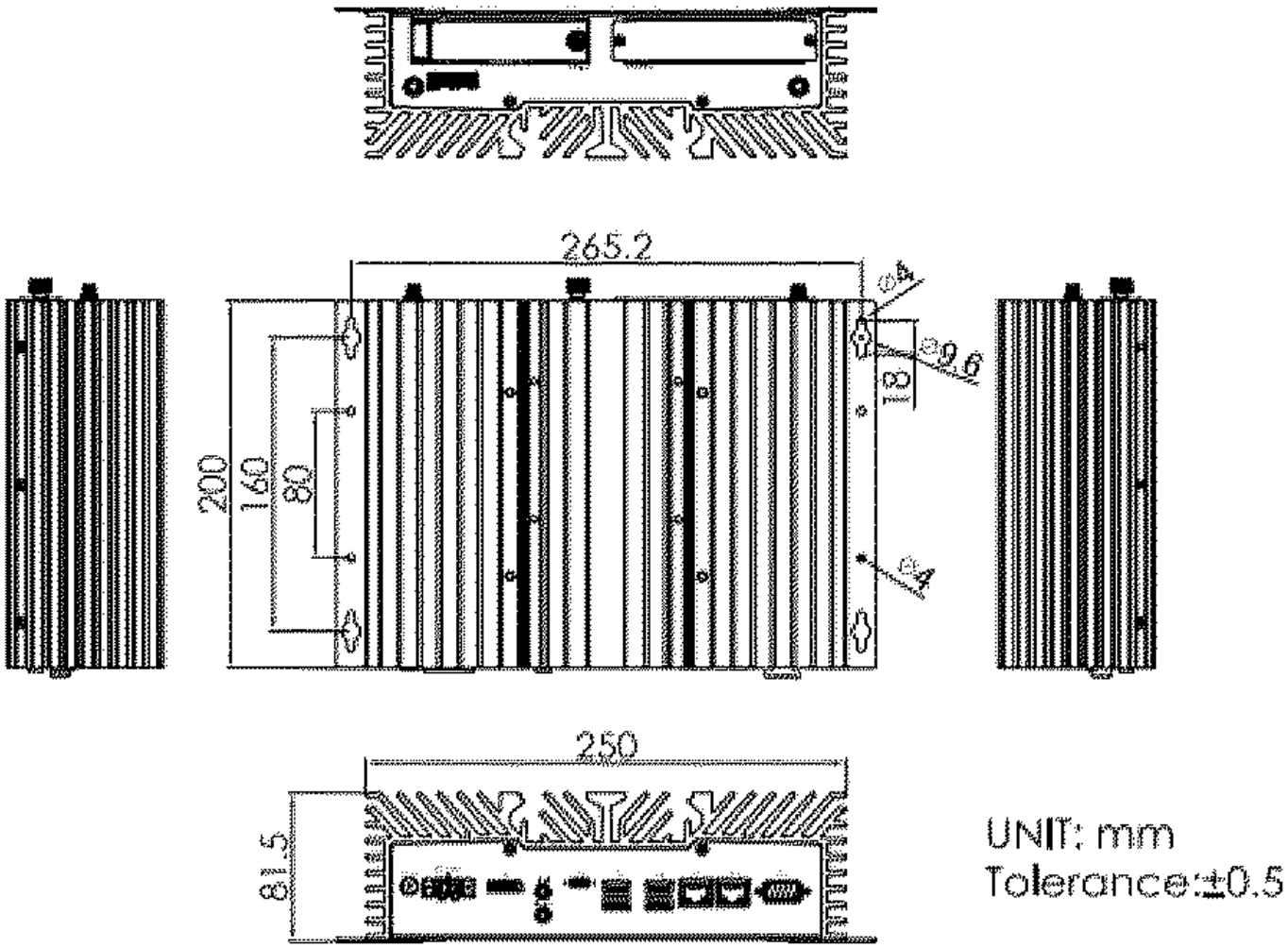

Russelectric
South Shore Park
Hingham, MA 02043

Specification Sheet

Russelectric Order No: 3009518009
Installation: UK GOOD SAMARITANS HOSPITAL
LOUISVILLE, KY

Customer: BOYD COMPANY
LOUISVILLE, KY

Customer P.O. Number: PO001271472-1

Item Number	Quantity	Serial Number	Marking
23000	1	3009518009-23000A/B	ATS_2

Description:
Russelectric model RTS30-ABLC10004AMF1-RPTCS05 dual electrical operators, microprocessor based, automatic closed transition transfer switch, rated 1000 amperes, to be used on a 277/480 volt AC 3-phase, 4-wire, 60HZ service, with switched neutral and a two-source, load break bypass/isolation switch arranged to bypass the load to either source-1 or source-2. Both units are mounted in a NEMA 1 free standing enclosure, with barriered compartments, and are completely interconnected at the factory (85KA 3 cycle, 65KA 30 cycle closing and withstand rating).

Table of Contents:

Physical Details: 83S0037D70
3009518009-P-23000 – 1 Sheet

Schematic Diagrams: 3009518009-S-23000 – 3 Sheets

Wiring Diagrams: 3009518009-W-23000 – 6 Sheets

Other Applicable Documents:

General Notes and Legend: EDS-190 Rev. 1

Revision Information:

Rev. No.	Description	Date	By

Accessory List

(**Internal**): Internal feature of the microprocessor.

Acc. No.	Function
VFS1	Programmable Setpoints: Under voltage sensing of source-1 to restore at 90% and fail at 80%. Over voltage sensing to pick up at 110% and drop out at 108%. Under frequency sensing is adjustable from 45.0 HZ to 60.0 HZ. Failure set at 59.0 HZ and restore set at 59.5 HZ. Over frequency sensing is adjustable from 60.1 HZ to 69.8 HZ. Failure set at 69.8 HZ and restore set at 66.0 HZ. (**Internal**)
VFS2	Programmable Setpoints: Under voltage sensing of source-2 to restore at 90% and fail at 80%. Over voltage sensing to pick up at 110% and drop out at 108%. Under frequency sensing is adjustable from 45.0 HZ to 60.0 HZ. Failure set at 59.0 HZ and restore set at 59.5 HZ. Over frequency sensing is adjustable from 60.1 HZ to 69.8 HZ. Failure set at 69.8 HZ and restore set at 66.0 HZ. (**Internal**)
TDES	Time delay to override momentary preferred source power outages to delay engine start signal and transfer switch operation (**delay for generator start**). Programmable 0.0 - 259 min:ss, factory set at 3.0 seconds. *A time setting greater than 10 seconds requires an external 24 volt DC, 1 amp power supply*. (**Internal**)
TDPS	Time delay on retransfer to the preferred source (**delay - xfer to preferred source**). Programmable 0.0 - 259 min:ss, factory set at 5 minutes. (**Internal**)
TDNNP	Time delay to control contact transition time from neutral to the non-preferred source. Programmable 0.0-10 min:ss, factory set at 1 second. (**Internal**)
TDNP	Time delay to control contact transition time from neutral to the preferred source. Programmable 0.0-10 min:ss, factory set at 1 second. (**Internal**)
TDEC	Engine overrun to provide unloaded engine operation after retransfer to the preferred source (**delay for engine cooldown**), programmable 0.0-60 min:ss, factory set at 5 minutes. (**Internal**)
SCF	Synchronizing check function to prevent transfer from the preferred source to the non-preferred source or retransfer from the non-preferred source to the preferred source until both sources are within acceptable limits of synchronism. (**Internal**)
XF1	Load test function to simulate preferred source power failure. (**Internal**)
XK18	Two position key operated transition mode selector switch. Legend plate marked: "CLOSED" - "OPEN" Nameplate marked: "TRANSITION MODE SELECTOR SWITCH"
	with
FTT	Fail to transfer timer. Timer provided to indicate the transfer switch has failed to transfer. Contacts are provided and wired to a terminal strip for customer connection to trip Source-1 and/or Source-2 circuit breakers. Solid state type, adjustable .1-1 seconds, factory set at .3 seconds.

Acc. No.	Function
CS1P	Auxiliary contact closed in source-1 position. Quantity of 2. Wired to terminal strip for customer connection.
CS2P	Auxiliary contact closed in source-2 position. Quantity of 2. Wired to terminal strip for customer connection.
CES	Form "C" contact to initiate engine starting or other customer functions. (**Internal**)
CMES	Transfer switch contacts in parallel with engine start circuitry to maintain engine start signal when the transfer switch is in the source-2 position.
CS1A	Form "C" contact to indicate source-1 availability. This relay action is before engine starting time delay. Quantity of 2.
CS2A	Form "C" contact to indicate source-2 availability. Quantity of 2.
CB1	Auxiliary contact closed when switch is bypassed to source-1. Quantity of 1. Wired to terminal strip for customer connection.
CB2	Auxiliary contact closed when switch is bypassed to source-2. Quantity of 1. Wired to terminal strip for customer connection.
LT1	Green LED on Operator Interface Panel to indicate switch in source-1 position. (**Internal**)
LT2	Red LED on Operator Interface Panel to indicate switch in source-2 position. (**Internal**)
LT3	Green LED on Operator Interface Panel to indicate source-1 available. (**Internal**)
LT4	Red LED on Operator Interface Panel to indicate source-2 available. (**Internal**)
LT6	Green LED to indicate source-1 power available. Nameplate marked: "SOURCE-1 POWER AVAILABLE"
LT7	Red LED to indicate source-2 power available. Nameplate marked: "SOURCE-2 POWER AVAILABLE"
LT8	Green LED to indicate switch in source-1 position. Nameplate marked: "SOURCE-1 POSITION"
LT9	Red LED to indicate switch in source-2 position. Nameplate marked: "SOURCE-2 POSITION"
LT16	Green LED to indicate load bypassed to source-1. Isolating contacts closed, transfer switch energized. Nameplate marked: "BYPASSED TO SOURCE-1 SUPPLY"

Acc. No.	Function
LT17	Red LED to indicate load bypassed to source-2. Isolating contacts closed, transfer switch energized. Nameplate marked: "BYPASSED TO SOURCE-2 SUPPLY"
LT18	Amber LED to indicate transfer switch isolated. Isolating contacts open, transfer switch bypassed and isolated. Nameplate marked: "ATS ISOLATED"
LT20	Red LED on Operator Interface Panel to indicate xfer inhibit. (**Internal**)
LT21	Red LED on Operator Interface Panel to indicate alarm condition. (**Internal**)
PM	Microprocessor based power monitor which provides voltage and frequency measurement of each phase of both source-1 and source-2, current measurement of each phase of the load circuit, power factor of load relative to either voltage source, and true and reactive power consumption of the load circuit. (**Internal**)
SB	Shorting type terminal block for load circuit.
	Ethernet: 10/100mb, Connector: RJ-45, Protocol: Modbus TCP

General Notes - Schematic Diagrams

Box selected indicates type of RPTCS controller provided

- ☐ Controller Type 1
- ☐ Controller Type 2
- ☐ Controller Type 3
- ☐ Controller Type 4
- ☒ Controller Type 5

1. All contacts shown with Source 1 and Source 2 power de-energized.

Legend

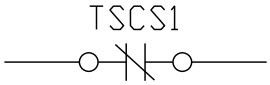

Contact on Source 1 shaft closed when switch is in Source 1 position -- open when switch is in Source 2 position.

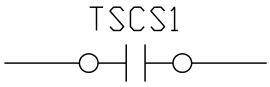

Contact on Source 1 shaft open when switch is in Source 1 position -- closed when switch is in Source 2 position.

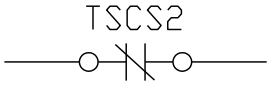

Contact on Source 2 shaft closed when switch is in Source 1 position -- open when switch is in Source 2 position.

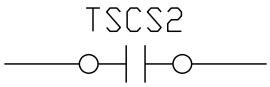

Contact on Source 2 shaft open when switch is in Source 1 position -- closed when switch is in Source 2 position.

LUG SCHEDULE

SWITCH SIZE	CABLE CONNECTION SIZE SOURCE 1, LOAD & SOURCE 2 PER PHASE & NEUTRAL	GROUND	ESTIMATED NET WEIGHT (lbs.)
1000–1200A	(4) #4–600MCM OR (8) #1/0–250MCM	(12) #6–250MCM	2800
1600A	(5) #4–600MCM OR (10) #1/0–250MCM	(15) #6–250MCM	3040
2000A	(6) #4–600MCM OR (12) #1/0–250MCM	(18) #6–250MCM	3485

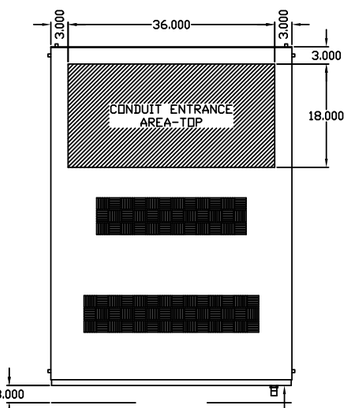

TOP VIEW

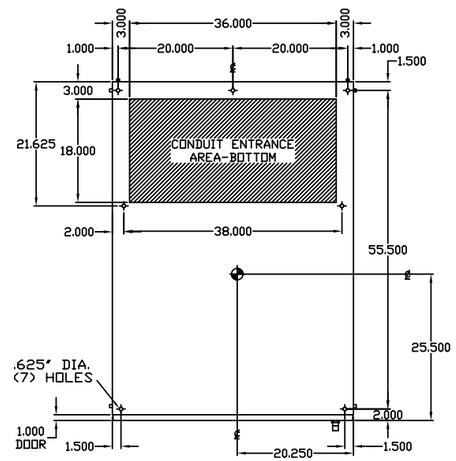

BOLT DOWN PATTERN
& BOTTOM CONDUIT PLAN

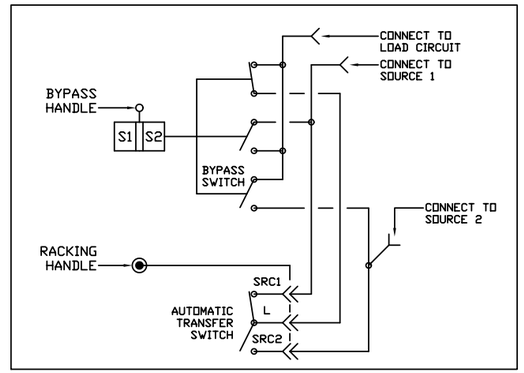

ONE LINE CONNECTION DIAGRAM

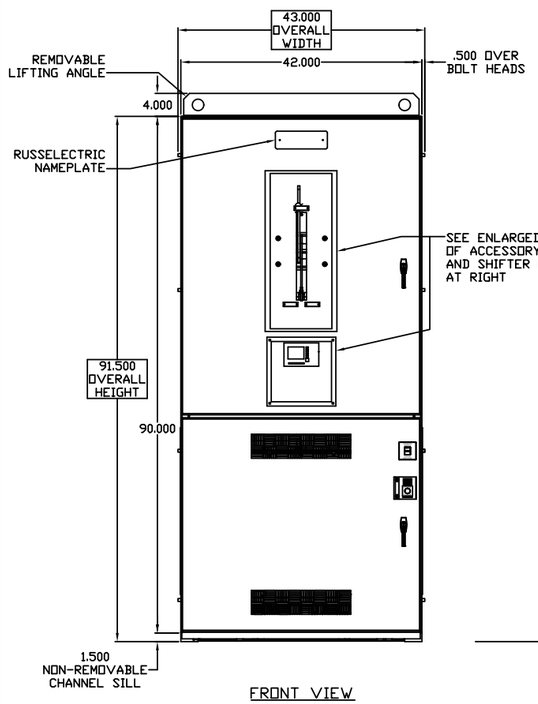

FRONT VIEW

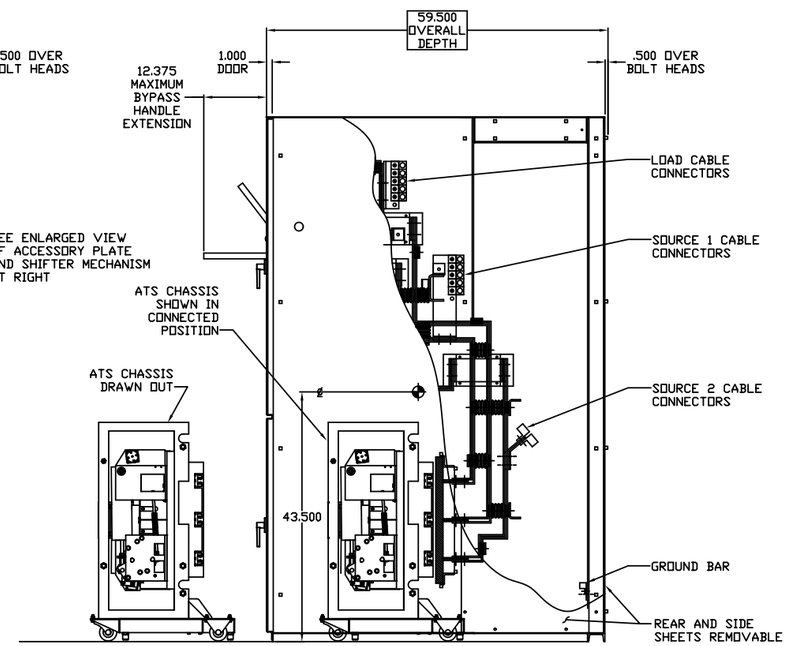

SECTION VIEW
OF TRANSFER SWITCH

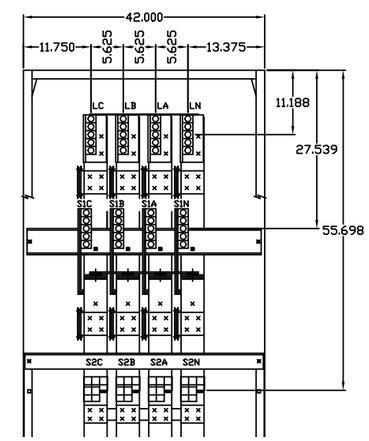

PARTIAL REAR VIEW
SHOWNG BUS MARKINGS

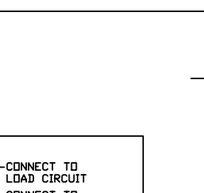

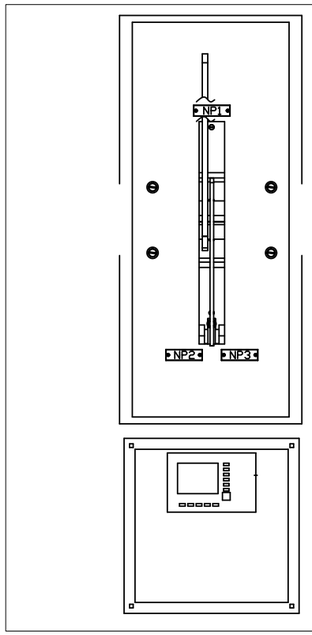

ENLARGED VIEW OF
ACCESSORY PLATE AND SHIFTER PLATE
(NAMEPLATE LOCATIONS)

GENERAL NOTES:

1. ENCLOSURE FABRICATED FROM SHEET STEEL IN ACCORDANCE WITH UL STANDARD 508.
2. ALL STEEL PARTS SHALL BE PREPARED FOR PAINTING BY A FIVE STEP CLEANING, PHOSPHATIZING AND SEALING PROCESS. THE PARTS SHALL THEN BE PAINTED ASA #61 GRAY, UTILIZING POLYESTER POWDER COATING APPLIED BY THE ELECTROSTATIC METHOD AND CURED IN A BAKING OVEN. THIS FINISH IS SUITABLE FOR OUTDOORS, AS WELL AS INDOOR APPLICATIONS.
3. LUG SIZES SPECIFIED ARE MECHANICAL TYPE SUITABLE FOR CU/AL CABLE.
4. ALL DIMENSIONS ARE IN INCHES (1 INCH = 2.54 CM)
5. SIDE ACCESS IS AVAILABLE THROUGH TWO 21.00 SIDE SHEETS TOWARD THE REAR OF THE ENCLOSURE.
6. SPECIAL CONSIDERATION MUST BE TAKEN WHEN PREPARING THE FOUNDATION. FOLLOW ALL APPLICABLE LOCAL AND INTERNATIONAL BUILDING CODES.
7. WHEN ANCHORING FOR A SEISMIC LOCATION, CONSIDERATION MUST BE GIVEN TO THE DESIGN OF THE PAD OR FOUNDATION. MINIMUM CONCRETE THICKNESS AND PSI, MINIMUM ANCHOR EDGE DISTANCE, CENTERLINE SPACING, AND EFFECTIVE EMBEDMENT ARE ALL FACTORS THAT WILL INFLUENCE THE ANCHORING.
   A. REFER TO THE PROJECT SPECIFIC SEISMIC STUDY DONE BY A CERTIFIED ENGINEER FOR PROPER ANCHOR DETAIL INFORMATION.
   B. USE AN ANCHOR THAT MEETS OR EXCEEDS THE STRENGTH OF A 1/2-INCH GRADE 5 BOLT WITH A 1/2" USS LARGE FLAT WASHER.

NOTE: REAR OR SIDE ACCESS REQUIRED.
CONSULT FACTORY IF FRONT ACCESSIBLE ONLY.

Russelectric®
A Siemens Business

NEMA 1 1000–2000A 4P (RTS30) CLOSED TRANSITION BYPASS ISOLATION SWITCH

SWITCH SIZE	NO. OF POLES	QUANTITY	SPECIAL MARKINGS	DR.BY	MDM	1.5.11	DWG. NO. 83S0037D70	B
1000–2000A	4			CHKD.	JTL	04/04/11		
CERTIFIED BY:			DATE:	APPD.			SHEET NO. 1 CONT'D ON SHEET NO. 2	REV

\PARTS\MECH\83\S0037D70.DWG

-FRONT VIEW-

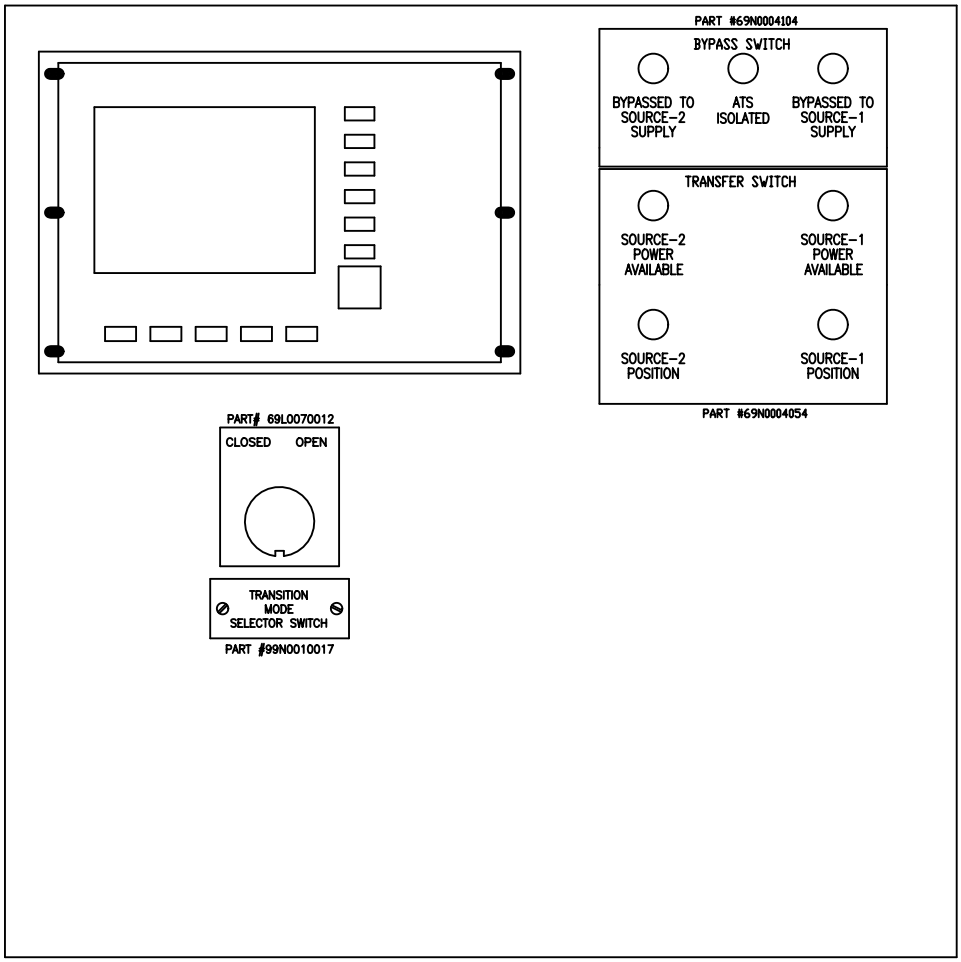

-DOOR-

	DATE	NAME	INSTALLATION	TITLE
DRAWN BY	4-11-22	D-R	UK GOOD SAMARITANS HOSPITAL LOUISVILLE, KY	ACCESSORY PLATE NAMEPLATE LAYOUT
CHKD BY	4-11-22	D-R		

Russelectric, A SIEMENS BUSINESS
SOUTH SHORE PARK, HINGHAM, MA 02043

DWG. NO. 3009518009-P-23000 | 0
PAGE: 1 | REV.

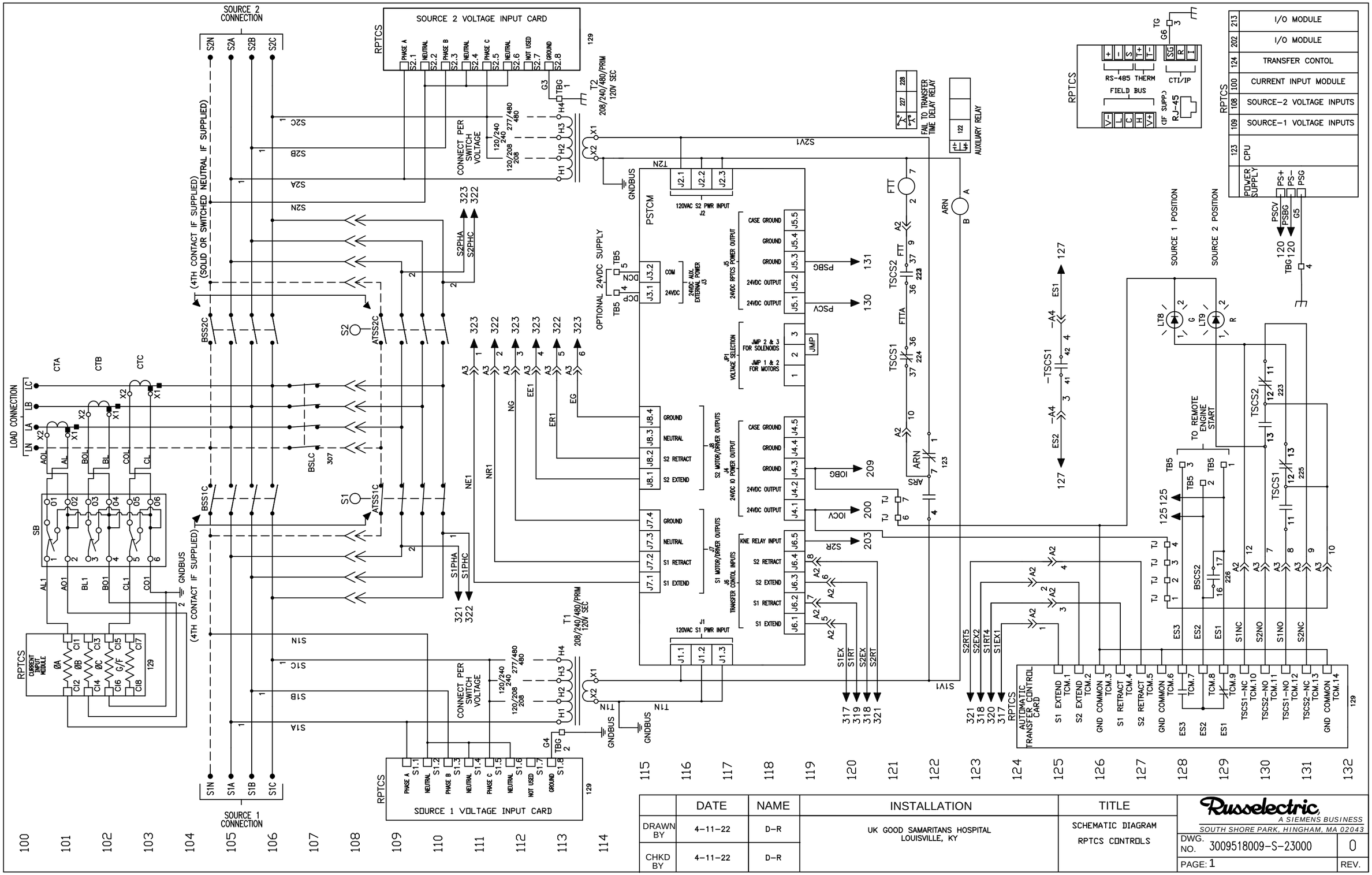

	DATE	NAME	INSTALLATION	TITLE
DRAWN BY	4-11-22	D-R	UK GOOD SAMARITANS HOSPITAL LOUISVILLE, KY	SCHEMATIC DIAGRAM RPTCS CONTROLS
CHKD BY	4-11-22	D-R		

Russelectric, A SIEMENS BUSINESS
SOUTH SHORE PARK, HINGHAM, MA 02043

DWG. NO. 3009518009-S-23000 | 0
PAGE: 1 | REV.

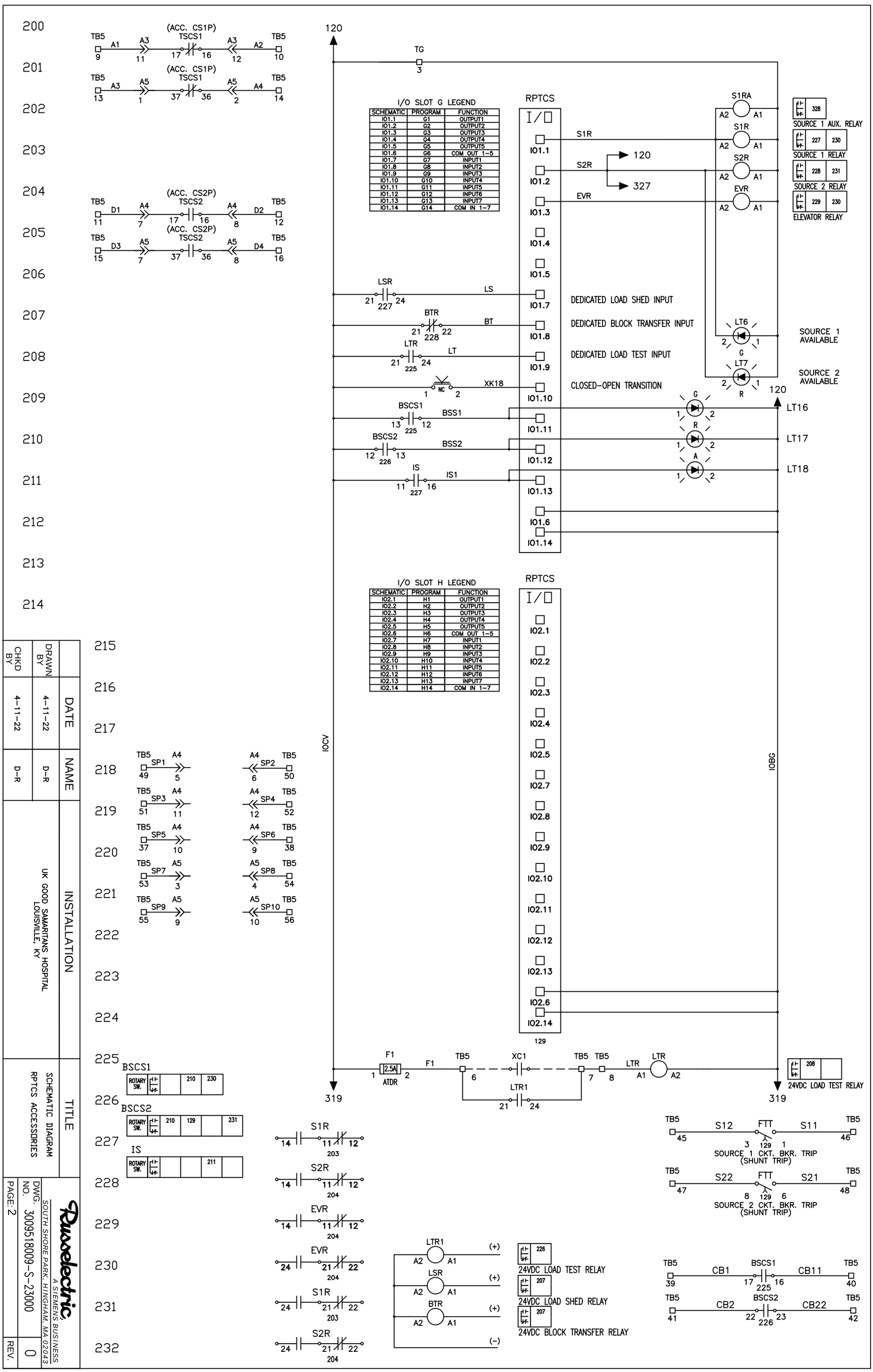

SCHEMATIC	PROGRAM	FUNCTION
IO1.1	G1	OUTPUT1
IO1.2	G2	OUTPUT2
IO1.3	G3	OUTPUT3
IO1.4	G4	OUTPUT4
IO1.5	G5	OUTPUT5
IO1.6	G6	COM OUT 1-5
IO1.7	G7	INPUT1
IO1.8	G8	INPUT2
IO1.9	G9	INPUT3
IO1.10	G10	INPUT4
IO1.11	G11	INPUT5
IO1.12	G12	INPUT6
IO1.13	G13	INPUT7
IO1.14	G14	COM IN 1-7

SCHEMATIC	PROGRAM	FUNCTION
IO2.1	H1	OUTPUT1
IO2.2	H2	OUTPUT2
IO2.3	H3	OUTPUT3
IO2.4	H4	OUTPUT4
IO2.5	H5	OUTPUT5
IO2.6	H6	COM OUT 1-5
IO2.7	H7	INPUT1
IO2.8	H8	INPUT2
IO2.9	H9	INPUT3
IO2.10	H10	INPUT4
IO2.11	H11	INPUT5
IO2.12	H12	INPUT6
IO2.13	H13	INPUT7
IO2.14	H14	COM IN 1-7

DRAWN BY	4-11-22	D-R	UK GOOD SAMARITANS HOSPITAL LOUISVILLE, KY
CHK'D BY	4-11-22	D-R	

INSTALLATION

TITLE: SCHEMATIC DIAGRAM RPTCS ACCESSORIES

Russelectric A SIEMENS BUSINESS SOUTH SHORE PARK, HINGHAM, MA 02043

DWG. NO. 3009518009-S-23000

REV. 0

PAGE: 2

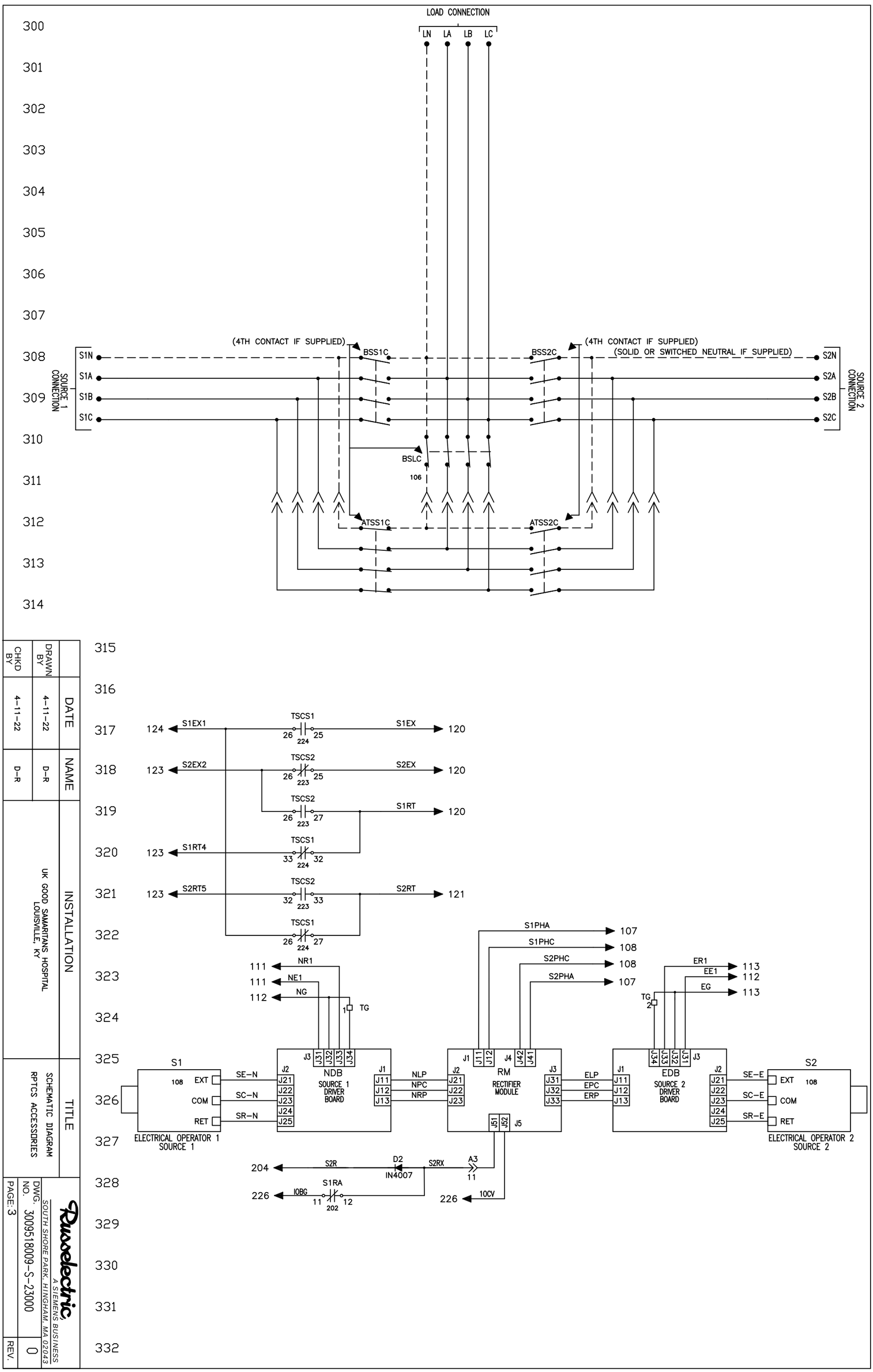
LOAD CONNECTION
LN LA LB LC
SOURCE 1 CONNECTION
S1N S1A S1B S1C
(4TH CONTACT IF SUPPLIED)
BSS1C
BSS2C
(4TH CONTACT IF SUPPLIED)
(SOLID OR SWITCHED NEUTRAL IF SUPPLIED)
S2N S2A S2B S2C
SOURCE 2 CONNECTION
BSLC
106
ATSS1C
ATSS2C
S1EX1
TSCS1
S1EX
S2EX2
TSCS2
S2EX
S1RT
S1RT4
S2RT5
S2RT
NR1
NE1
NG
TG
S1PHA
S1PHC
S2PHC
S2PHA
ER1
EE1
EG
S1
ELECTRICAL OPERATOR 1 SOURCE 1
EXT
COM
RET
SE-N
SC-N
SR-N
NDB
SOURCE 1 DRIVER BOARD
NLP
NPC
NRP
RM
RECTIFIER MODULE
ELP
EPC
ERP
EDB
SOURCE 2 DRIVER BOARD
SE-E
SC-E
SR-E
S2
ELECTRICAL OPERATOR 2 SOURCE 2
S2R
D2
IN4007
S2RX
A3
S1RA
IOBC
10CV
DRAWN BY
CHK'D BY
DATE
4-11-22
NAME
D-R
INSTALLATION
UK GOOD SAMARITANS HOSPITAL
LOUISVILLE, KY
TITLE
SCHEMATIC DIAGRAM
RPTCS ACCESSORIES
Russelectric
A SIEMENS BUSINESS
SOUTH SHORE PARK, HINGHAM, MA 02043
DWG. NO. 3009518009-S-23000
PAGE: 3
REV. 0

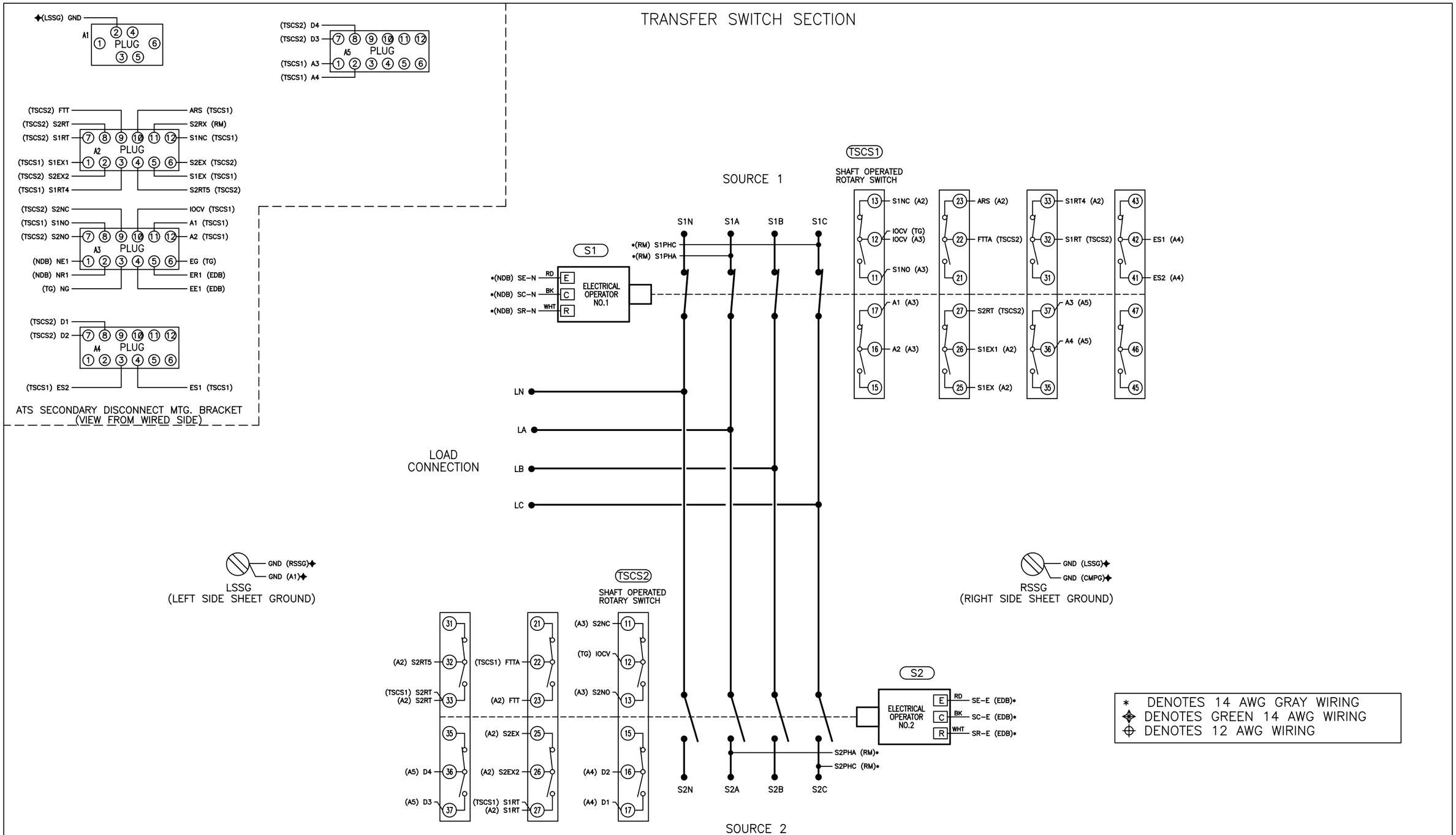

	DATE	NAME	INSTALLATION	TITLE	Russelectric, A SIEMENS BUSINESS SOUTH SHORE PARK, HINGHAM, MA 02043	
DRAWN BY	4-11-22	D-R	UK GOOD SAMARITANS HOSPITAL LOUISVILLE, KY	WIRING DIAGRAM TRANSFER SWITCH BASE	DWG. NO. 3009518009-W-23000	Ø
CHKD BY	4-11-22	D-R			PAGE: 1	REV.

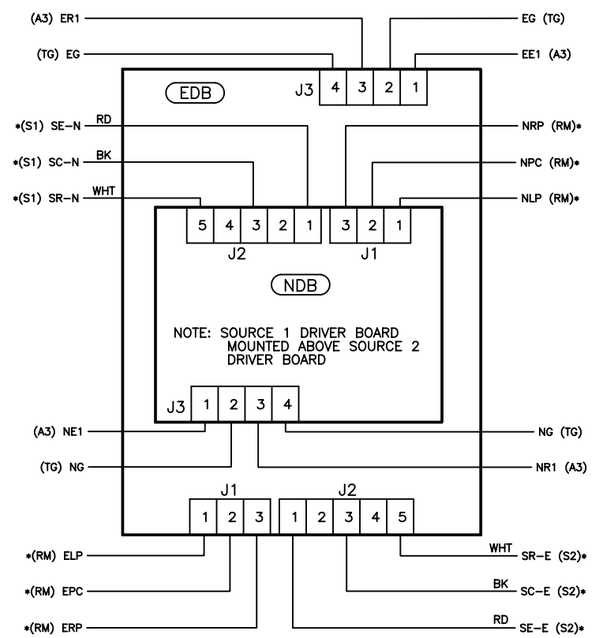

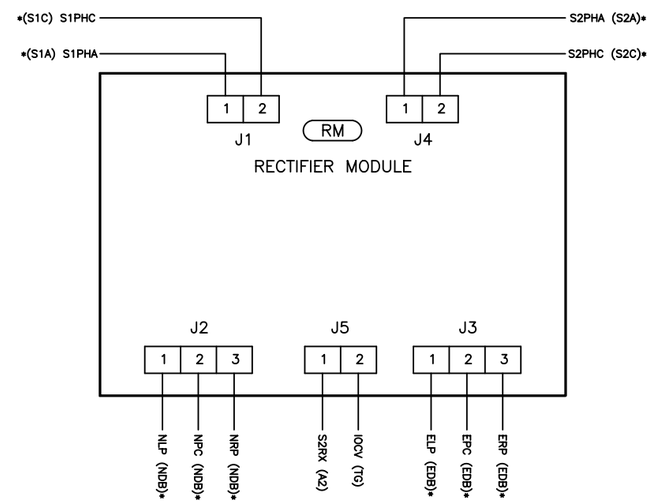

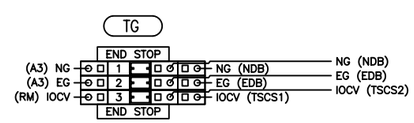

* DENOTES 14 AWG GRAY WIRING
DENOTES GREEN 14 AWG WIRING
DENOTES 12 AWG WIRING

	DATE	NAME	INSTALLATION	TITLE	Russelectric, A SIEMENS BUSINESS SOUTH SHORE PARK, HINGHAM, MA 02043	
DRAWN BY	4-11-22	D-R	UK GOOD SAMARITANS HOSPITAL LOUISVILLE, KY	WIRING DIAGRAM DRIVER BOARDS	DWG. NO. 3009518009-W-23000	Ø
CHKD BY	4-11-22	D-R			PAGE: 2	REV.

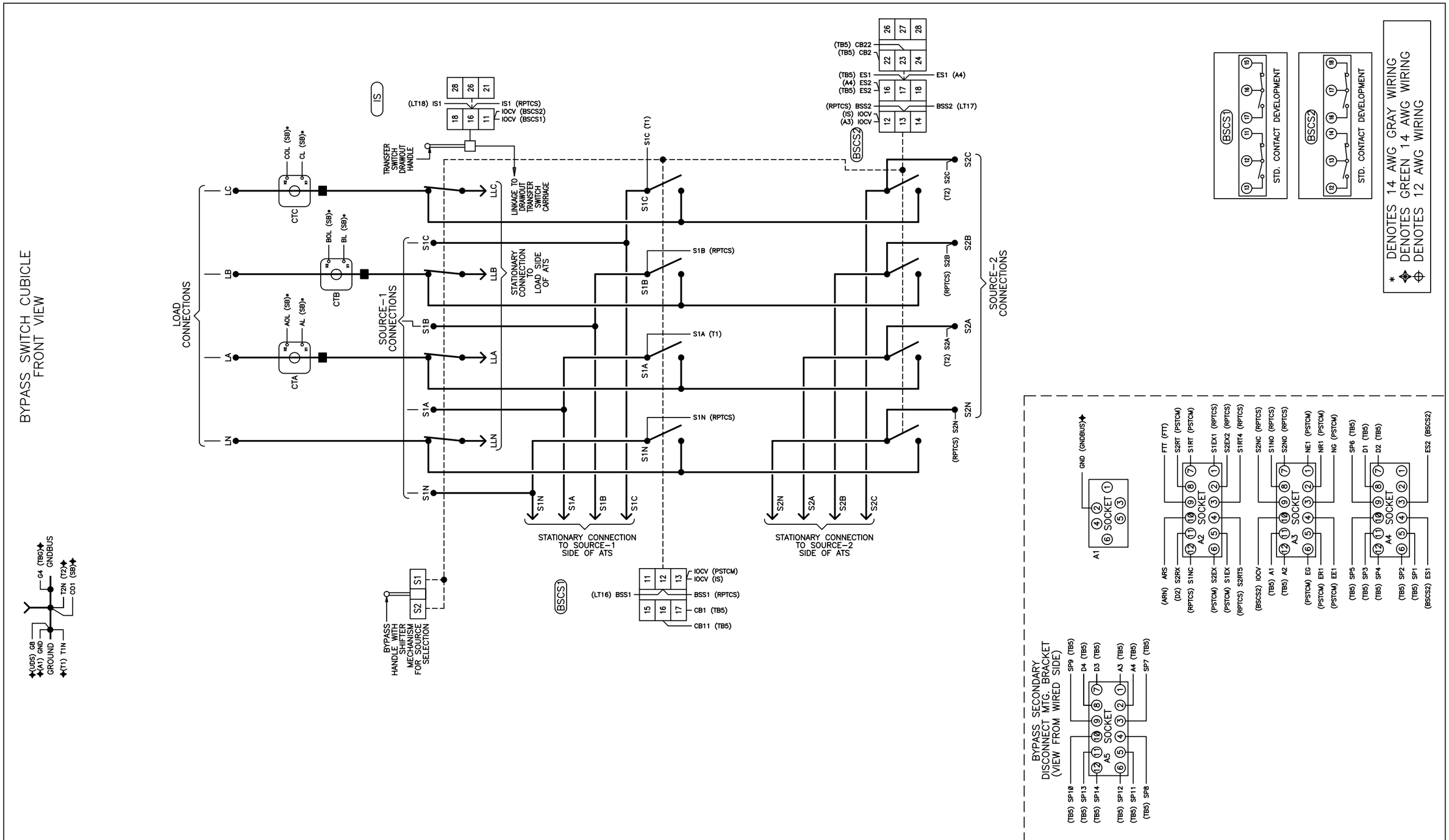

	DATE	NAME	INSTALLATION	TITLE	Russelectric, A SIEMENS BUSINESS SOUTH SHORE PARK, HINGHAM, MA 02043
DRAWN BY	4-11-22	D-R	UK GOOD SAMARITANS HOSPITAL LOUISVILLE, KY	WIRING DIAGRAM BYPASS SWITCH	DWG. NO. 3009518009-W-23000 Ø
CHKD BY	4-11-22	D-R			PAGE: 3 REV.

* ✦ DENOTES 14 AWG GRAY WIRING
DENOTES GREEN 14 AWG WIRING

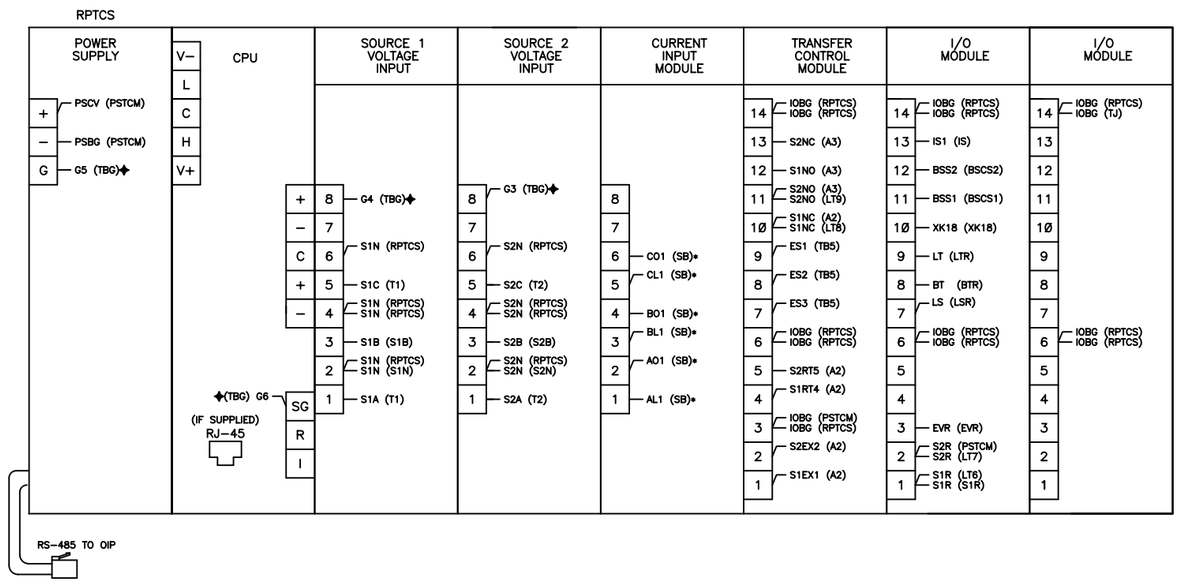

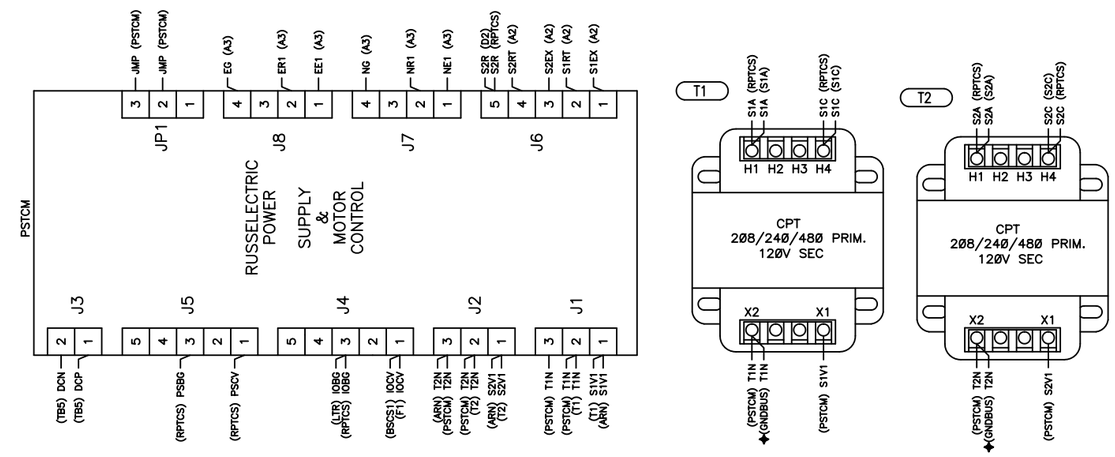

	DATE	NAME	INSTALLATION	TITLE
DRAWN BY	4-11-22	D-R	UK GOOD SAMARITANS HOSPITAL LOUISVILLE, KY	WIRING DIAGRAM RELAY PLATE
CHKD BY	4-11-22	D-R		

Russelectric, A SIEMENS BUSINESS
SOUTH SHORE PARK, HINGHAM, MA 02043

DWG. NO. 3009518009-W-23000 REV. Ø

PAGE: 4

FRONT LEFT SIDE

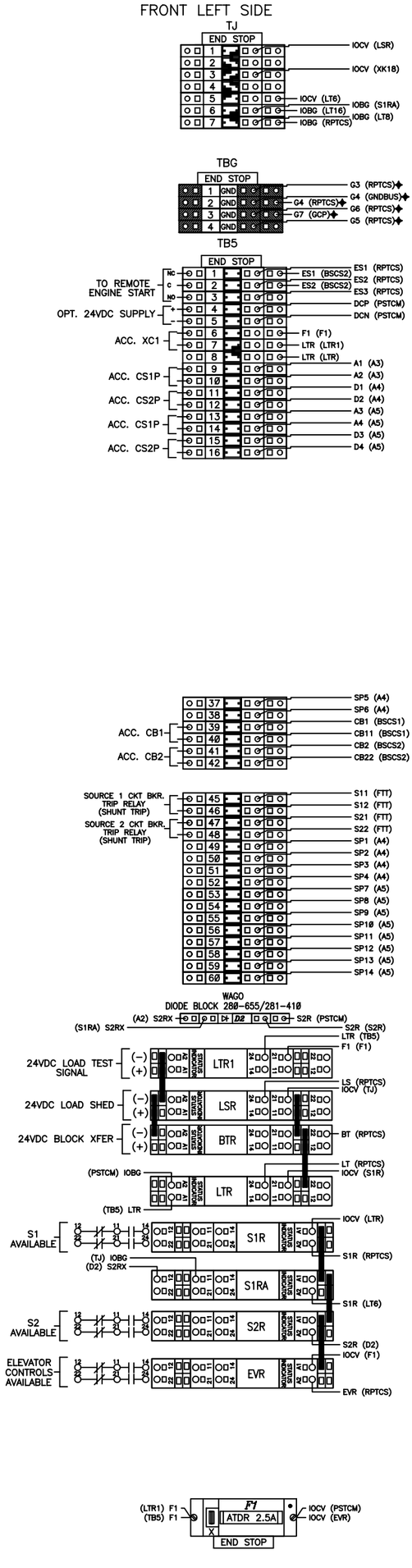

FRONT RIGHT SIDE

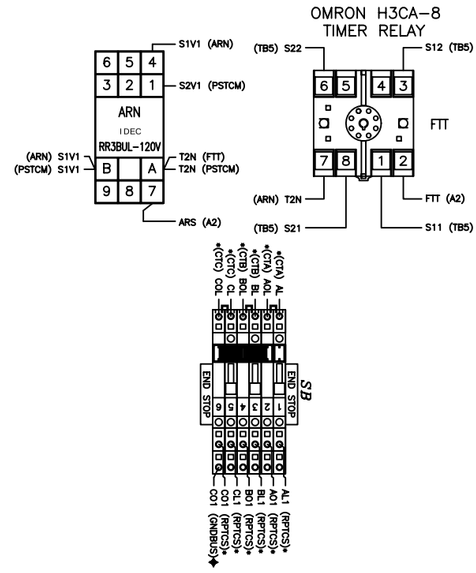

* DENOTES 14 AWG GRAY WIRING
◆ DENOTES GREEN 14 AWG WIRING
⊕ DENOTES 12 AWG WIRING

	NAME	DATE	INSTALLATION	TITLE
DRAWN BY	D-R	4-11-22	UK GOOD SAMARITANS HOSPITAL LOUISVILLE, KY	WIRING DIAGRAM FRONT LEFT/RIGHT SIDES
CHKD BY	D-R	4-11-22		

Russelectric, A SIEMENS BUSINESS
SOUTH SHORE PARK, HINGHAM, MA 02043

DWG. NO. 3009518009-W-23000
REV. Ø
PAGE: 5

* DENOTES 14 AWG GRAY WIRING
✦ DENOTES GREEN 14 AWG WIRING

	DATE	NAME	INSTALLATION	TITLE	Russelectric A SIEMENS BUSINESS SOUTH SHORE PARK, HINGHAM, MA 02043	
DRAWN BY	4-11-22	D-R	UK GOOD SAMARITANS HOSPITAL LOUISVILLE, KY	WIRING DIAGRAM DOOR	DWG. NO. 3009518009-W-23000	Ø
CHKD BY	4-11-22	D-R			PAGE: 6	REV.

BOYD CAT

Parkersburg
Ohio
Jackson
West Virginia
Nitro
Belle
Diamond
Dry Ridge
Ashland
Jeffersonville
Indiana
Middletown
Mt. Sterling
Logan
Beckley
Evansville
Louisville
Lexington
Pikeville
Elizabethtown
Hazard
Kentucky
Columbia
Corbin
Bowling Green
Hopkinsville
Paducah
Mayfield

Effective with sales to the first user on or after December 1, 2010

CATERPILLAR LIMITED WARRANTY

Industrial, Petroleum, Locomotive, and Agriculture Engine Products and Electric Power Generation Products

Worldwide

Caterpillar Inc. or any of its subsidiaries ("Caterpillar") warrants new and remanufactured engines and electric power generation products sold by it (including any products of other manufacturers packaged and sold by Caterpillar), to be free from defects in material and workmanship.

This warranty does not apply to Caterpillar Motoren (CM) product; engines sold for use in on-highway vehicle or marine applications; engines in machines manufactured by or for Caterpillar; 3500 and 3600 Family engines used in locomotive applications; 3000 Family engines, C0.5 through C4.4 and ACERT (C6.6, C7, C7.1, C9, C9.3, C11, C13, C15, C18, C27, and C32) engines used in industrial applications; or Cat batteries. These products are covered by other Caterpillar warranties.

This warranty is subject to the following:

Warranty Period

- For new industrial engines, engines in a petroleum applications or Petroleum Power Systems, or engines in a Locomotive application, or Uninterruptible Power Supply (UPS) systems, the warranty period is 12 months after date of delivery to the first user.
- For Mobile Agricultural applications the warranty period is 24 months after date of delivery to the first user.
- For controls only (EPIC), configurable, and custom switchgear products, as well as automatic transfer switch products, the warranty period is 24 months after date of delivery to the first user.
- For electric power generation products in prime or continuous applications the warranty period is 12 months. For standby applications the warranty period is 24 months/1000 hours. For emergency standby applications the warranty period is 24 months/400 hours. All terms begin after date of delivery to the first user.
- For all Remanufactured Generator (GenEnds) products in prime or continuous applications the warranty period is 12 months. For standby applications the warranty period is 24 months/1000 hours. For emergency standby applications the warranty period is 24 months/400 hours. All terms begin after date of delivery to the first user.
- For all Remanufactured engines, the warranty period is 6 months (12 months for mobile agricultural and standby electric power generation applications) after date of delivery to the first user.

Caterpillar Responsibilities

If a defect in material or workmanship is found during the warranty period, Caterpillar will, during normal working hours and at a place of business of a Cat dealer or other source approved by Caterpillar:

- Provide (at Caterpillar's choice) new, Remanufactured, or Caterpillar approved repaired parts or assembled components needed to correct the defect.

Note: New, remanufactured, or Caterpillar approved repaired parts or assembled components provided under the terms of this warranty are warranted for the remainder of the warranty period applicable to the product in which installed as if such parts were original components of that product. Items replaced under this warranty become the property of Caterpillar.

- Replace lubricating oil, filters, coolant, and other service items made unusable by the defect.
- Provide reasonable and customary labor needed to correct the defect, including labor to disconnect the product from and reconnect the product to its attached equipment, mounting, and support systems, if required.

For new 3114, 3116, and 3126 engines and electric power generation products (including any new products of other manufacturers packaged and sold by Caterpillar):

- Provide travel labor, up to four hours round trip, if in the opinion of Caterpillar, the product cannot reasonably be transported to a place of business of a Cat dealer or other source approved by Caterpillar (travel labor in excess of four hours round trip, and any meals, mileage, lodging, etc. is the user's responsibility).

For all other products:

- Provide reasonable travel expenses for authorized mechanics, including meals, mileage, and lodging, when Caterpillar chooses to make the repair on-site.

User Responsibilities

The user is responsible for:

- Providing proof of the delivery date to the first user.
- Labor costs, except as stated under "Caterpillar Responsibilities," including costs beyond those required to disconnect the product from and reconnect the product to its attached equipment, mounting, and support systems.
- Travel or transporting costs, except as stated under "Caterpillar Responsibilities."
- Premium or overtime labor costs.
- Parts shipping charges in excess of those that are usual and customary.
- Local taxes, if applicable.
- Costs to investigate complaints, unless the problem is caused by a defect in Caterpillar material or workmanship.
- Giving timely notice of a warrantable failure and promptly making the product available for repair.

(continue on the reverse side……..)

- Performance of the required maintenance (including use of proper fuel, oil, lubricants, and coolant) and items replaced due to normal wear and tear.
- Allowing Caterpillar access to all electronically stored data.

Limitations

Caterpillar is not responsible for:

- Failures resulting from any use or installation that Caterpillar judges improper.
- Failures resulting from attachments, accessory items, and parts not sold or approved by Caterpillar.
- Failures resulting from abuse, neglect, and/or improper repair.
- Failures resulting from user's delay in making the product available after being notified of a potential product problem.
- Failures resulting from unauthorized repairs or adjustments, and unauthorized fuel setting changes.
- Damage to parts, fixtures, housings, attachments, and accessory items that are not part of the engine or electric power generation product (including any products of other manufacturers packaged and sold by Caterpillar).
- Repair of components sold by Caterpillar that is warranted directly to the user by their respective manufacturer. Depending on type of application, certain exclusions may apply. Consult your Cat dealer for more information.

For products operating outside of Australia, Fiji, Nauru, New Caledonia, New Zealand, Papua New Guinea, the Solomon Islands and Tahiti, the following is applicable:

NEITHER THE FOREGOING EXPRESS WARRANTY NOR ANY OTHER WARRANTY BY CATERPILLAR, EXPRESS OR IMPLIED, IS APPLICABLE TO ANY ITEM CATERPILLAR SELLS THAT IS WARRANTED DIRECTLY TO THE USER BY ITS MANUFACTURER.

THIS WARRANTY IS EXPRESSLY IN LIEU OF ANY OTHER WARRANTIES, EXPRESS OR IMPLIED, INCLUDING ANY WARRANTY OF MERCHANTABILITY OR FITNESS FOR A PARTICULAR PURPOSE, EXCEPT CATERPILLAR EMISSION-RELATED COMPONENTS WARRANTIES FOR NEW ENGINES, WHERE APPLICABLE. REMEDIES UNDER THIS WARRANTY ARE LIMITED TO THE PROVISION OF MATERIAL AND SERVICES, AS SPECIFIED HEREIN.

CATERPILLAR IS NOT RESPONSIBLE FOR INCIDENTAL OR CONSEQUENTIAL DAMAGES.

CATERPILLAR EXCLUDES ALL LIABILITY FOR OR ARISING FROM ANY NEGLIGENCE ON ITS PART OR ON THE PART OF ANY OF ITS EMPLOYEES, AGENTS OR REPRESENTATIVES IN RESPECT OF THE MANUFACTURE OR SUPPLY OF GOODS OR THE PROVISION OF SERVICES RELATING TO THE GOODS.

IF OTHERWISE APPLICABLE, THE VIENNA CONVENTION ON CONTRACTS FOR THE INTERNATIONAL SALE OF GOODS IS EXCLUDED IN ITS ENTIRETY.

For personal or family use engines or electric power generation products, operating in the USA, its territories and possessions, some states do not allow limitations on how long an implied warranty may last nor allow the exclusion or limitation of incidental or consequential damages. Therefore, the previously expressed exclusion may not apply to you. This warranty gives you specific legal rights and you may also have other rights, which vary by jurisdiction. To find the location of the nearest Cat dealer or other authorized repair facility, call (800) 447-4986. If you have questions concerning this warranty or its applications, call or write:

In USA and Canada: Caterpillar Inc., Engine Division, P. O. Box 610, Mossville, IL 61552-0610, Attention: Customer Service Manager, Telephone (800) 447-4986. Outside the USA and Canada: Contact your Cat dealer.

For products operating in Australia, Fiji, Nauru, New Caledonia, New Zealand, Papua New Guinea, the Solomon Islands and Tahiti, the following is applicable:

THIS WARRANTY IS IN ADDITION TO WARRANTIES AND CONDITIONS IMPLIED BY STATUTE AND OTHER STATUTORY RIGHTS AND OBLIGATIONS THAT BY ANY APPLICABLE LAW CANNOT BE EXCLUDED, RESTRICTED OR MODIFIED ("MANDATORY RIGHTS"). ALL OTHER WARRANTIES OR CONDITIONS, EXPRESS OR IMPLIED (BY STATUTE OR OTHERWISE), ARE EXCLUDED.

NEITHER THIS WARRANTY NOR ANY OTHER CONDITION OR WARRANTY BY CATERPILLAR, EXPRESS OR IMPLIED (SUBJECT ONLY TO THE MANDATORY RIGHTS), IS APPLICABLE TO ANY ITEM CATERPILLAR SELLS THAT IS WARRANTED DIRECTLY TO THE USER BY ITS MANUFACTURER.

TO THE EXTENT PERMITTED UNDER THE MANDATORY RIGHTS, IF CATERPILLAR IS THE SUPPLIER TO THE USER, CATERPILLAR'S LIABILITY SHALL BE LIMITED AT ITS OPTION TO (a) IN THE CASE OF SERVICES, THE SUPPLY OF THE SERVICES AGAIN OR THE PAYMENT OF THE COST OF HAVING THE SERVICES SUPPLIED AGAIN, AND (b) IN THE CASE OF GOODS, THE REPAIR OR REPLACEMENT OF THE GOODS, THE SUPPLY OF EQUIVALENT GOODS, THE PAYMENT OF THE COST OF SUCH REPAIR OR REPLACEMENT OR THE ACQUISITION OF EQUIVALENT GOODS.

CATERPILLAR EXCLUDES ALL LIABILITY FOR OR ARISING FROM ANY NEGLIGENCE ON ITS PART OR ON THE PART OF ANY OF ITS EMPLOYEES, AGENTS OR REPRESENTATIVES IN RESPECT OF THE MANUFACTURE OR SUPPLY OF GOODS OR THE PROVISION OF SERVICES RELATING TO THE GOODS.

CATERPILLAR IS NOT LIABLE FOR INCIDENTAL OR CONSEQUENTIAL DAMAGES UNLESS IMPOSED UNDER MANDATORY RIGHTS.

IF OTHERWISE APPLICABLE, THE VIENNA CONVENTION ON CONTRACTS FOR THE INTERNATIONAL SALE OF GOODS IS EXCLUDED IN ITS ENTIRETY.

This warranty covers every major component of the products. Claims under this warranty should be submitted to a place of business of a Cat dealer or other source approved by Caterpillar. For further information concerning either the location to submit claims or Caterpillar as the issuer of this warranty, write Caterpillar Inc., 100 N. E. Adams St., Peoria, IL USA 61629.

Submittal Review Summary

Project: Emergency Generator Upgrade – UKHC Good Sam – 2557.0

Submittal: Generator Set

CMTA Project Code: XKGU21 Reviewed by: ARK

Date Received: 2022-05-27 Date Returned: 2022-6-28

Corrections or comments made on the shop drawings during this review do not relieve the contractor from compliance with requirements of the drawings and specifications. This check is only for review of general compliance with the information given in the contract documents. The contractor is responsible for confirming and correlating all quantities and dimensions; selecting fabrication processes and techniques of construction; coordinating his work with that of all other trades; and performing his work in a safe and satisfactory manner.

☐ **Reviewed** ☒ **Furnish as Corrected**

☐ **Rejected** ☐ **Revise and Resubmit**

COMMENTS:

1. Note that generator output conduit will be routed from overhead. Confirm bottom entry box is appropriate.
2. Confirm exact dimensions of alternator and location of output and control enclosures are coordinated with the available space as shown on the solicitation floor plans.
3. Submit paralleling switchgear and transfer switch for approval.

2429 Members Way Lexington KY 40504 859.253.0892 www.cmta.com

MEP Engineering | Performance Contracting | Zero Energy Engineering | Technology | Commissioning

CAT C27 PGBG
750kW, 480V
Generator Set

SUBMITTAL

CUSTOMER:

UNIVERSITY OF KENTUCKY

PROJECT:

UKHC Good
Samaritan 750kW

Ryan Smith
RyanSmith@BoydCat.com
(502) 774-4441

BILL OF MATERIALS

Attn: Contractors

Quote: 30964482

Re: UK Good Samaritan

Boyd Cat is pleased to present you with the following quotation for the UK Good Samaritan project:

Model: C27
Quantity: 1
Rating: 750kW
Certification: U.S. EPA Stationary Emergency Use Only
Fuel: DIESEL
Excitation: PM
Frequency: 60 Hz
Voltage: 480 V
Duty: STANDBY

The following features will be included:

Feature Description
STANDBY POWER
EPA STATIONARY EMERGENCY
UL 2200 LISTED PACKAGE GEN SET
IBC SEISMIC CERTIFICATION
60HZ 480 VOLT (WYE)
60 Hz, 750 EKW W/FAN
C27 750S ESE/T2 W/O OLR.
RANDOM WOUND
PERMANANENT MAGNET (PM)
1268/1 RW PM ALT QC
EMCP 4.2B CONTROL PANEL
ENGLISH PANEL LANGUAGE
ENGLISH INSTRUCTION LANGUAGE
GENERAL EPG
HEALTHCARE (NON DATACENTERS)
STANDBY POWER
CONTROL PANEL MOUNTING -REAR
EMCP4.2B CONTROL PNL NON RECES
ENGINE INTERFACE HARNESS EUI
GENERATOR TERMINAL BOX
RR CP/AUX MTG WITH RR EXT BOX
LOCAL NFPA ANNUNCIATOR
QTY REMOTE ANNUNC (1-5)
ETHERNET ONLY

DECLINE / NOTAPPLICABLE
QTY REMOTE DIO MODULE (1-5)

NEUTRAL GROUND CONNECTION LV
GROUND GROUP
CT 1500:5 RATIO
LOW VOLTAGE WIRING
1200 FRAME ACCESSORIES
LOWER COVER RIGHT
LOWER COVER LEFT
CONTROL BOX MOUNTING
RIGHT SIDE EXTENSION BOX
1200 AMP BREAKER
P FRAME BREAKER
3 POLE CIRCUIT BREAKER
LSIG TRIP UNIT
NON-PARALLELING BREAKER
P 1200A LSI-P 3P UL EO
BOTTOM CABLE ENTRY
REAR EXTENSION BOX
REAR EXT BOX CLOSE OUT
P/NS FRAME CONN 3P BCE REAR
CENTER 5000A LV MULTI BUS 1200
P OR NS-P FRAME CB REAR MOUNT
24VDC REGULATOR P/R/NS FRM CB
QTY CB TERMINALS FOR WM (1-2)
RIGHT EXTENSION BOX ROOF
P-R-NS FRAME 1ST CB WIRING
EXTENSION BOX FLOOR RIGHT
EXTENSION BOX FLOOR REAR
EXTENSION BOX PLUGS RIGHT SIDE
STANDARD BASE 1B/1400/20/40
SEISMIC SPRING ISOLATORS
TORSIONAL COUPLING 75 SHORE
CERTIFIED RADIATOR C27
138L EXTENDED LIFE COOLANT
GUARD AND SHIELD SYSTEM 08
INTEGRATED VOLTAGE REGULATOR..
STANDARD AIR CLEANER
STANDARD SUMP OIL PAN
ELEC. START MOTOR HEAVY DUTY
SPACE HEATER CONTROL
SPACE HEATER 1200S FRAME
BATT SET 1x 24V WET 1400CCA
BATTERY CHARGER 10A NFPA
JW HEATER - SINGLE W/PUMP 60HZ

WIRING GP-JW HEATER
208/220/240V JWH CONTROL
STD. ENGINE TEST CHARGE
PGS TEST REPORT @ 0.8 PF
DTO C27 SR4B 597 FRAME 0.8P 480V 60HZ
GENERATOR AR-PWR SR5 1296 FRMAE
SPECIAL STAMPING 750EKW 480V 125/40C
GENERATOR AR-SR4B 597 FRAME PM

Dealer provided components and services:

Description
Resistive Load Bank Testing NFPA110
Pryco PY200ULDWUL (200 Gallon Day Tank)
12" Critical Grade Carbon Steel Exhaust Silencer (Insulation not included)
Exhaust Hardware & Flexes
Start-up by WSC Technician

Pryco Day tank BOM:

U/L 2016 - U/L Requirements for UL-508 compliance Nema 1.
PY200ULDW - Pryco 200 Gallon Standard Day Tank - UL Listed - Double Wall
Standard Features - Standard Day Tanks
* Removable 61/2" Square Inspection Plate with gasket
* Fuel Level Gauge
* Heavy Duty Float Switch
* "Press-to-test" switch
* "Pump Running" Indicator Light
* Four - 1" NPT Threaded Pipe Connections
* Tank Drain / for the inner wall, piped through the outer wall, w/ 1" petcock valve * Removable top cover * Epoxy coating inside
* Pryco (medium) gray exterior paint (or an industrial color of choice)

Day Tank Does not comply with New York City Code
Option #202 - Three Position Switch, "Pump Run-Off-Automatic" For return Pump Option #210 - High/Low Combination Fuel Level Alarm - Dual separate float switches that activates red lights on control panel when a low or high fuel level is sensed. Option #211 - Terminals, Socket, Relay and Wiring for Option #210 (3 amp relay, dry contacts)
Option #213B - 1" n/o solenoid valve, critical high fuel pump motor shut down, light on control panel, remote alarm contacts
Option #216-1-10, Circuit breaker, 10 ampere single phase, 1 pole
Option #217 - Standard Float Switch - 15 amp Lag pump
Option #223 - Alarm Horn - 120vac for option 295 rupture alarm
Option #242 - Alarm Silence Switch 1 303.00 303.00
Option #312B - Priming tee 1" NPT 2 103.00 206.00
Option #318SGL - Fuel Filter / Water Separator (Type - F) Single - A 25 micron filter and housing to effectively remove water and solids from fuel. 1 1/2" NPT

Option #323C - Vent U/L Kit, Double Wall - A tank venting system that includes two working vent caps and two emergency pressure relief caps. - 4" NPT Use on 200 to 500 gallon double wall day tanks.
Option #334-3 - Day Tank Cover - Nema 1 enclosure for day tanks, Triplex (3) pumps, motors and control components
Option #341DWA - Drain for the inner tank piped through the outer wall with 1/2" Petcock Valve. Includes Option 340.
Option # 360/120-B - Solenoid Valve (N/C) - installed on tank inlet to prevent tank flooding and for other special applications
Option #372_PS_10 - fuel FLOW SWITCH 1" detects NO FUEL IN LINE -10 Watts
Option #373 - Time Delay Relay - pump-Motor shut down for Option #372 & alarm contact.
Option #399-1-10 - Reverse Flow Controller - to pump fuel from day tank backto main storage tank. Requires separate pump and motor. Includes float switch and pipe stems. requires option 334 duplex or triplex pump cover if used with supply pump (s) on the day tank. Requires check valve option 355B in return line. 1" NPT
Option #355B - Check valve - Pump Intake 1" NPT
Option #401V - Viking Pump, Cast Iron, 4 GPM - Requires 1/3 HP motor with 1/2" ports - Return Pump Option #402VPR-Viking Cast Iron 2GPM Pump with Pressure Relief Valve with 1/2" ports - requires 1/3 HP motor for supply
Option #414 - Pryco standard motor -1/3 HP, 115v, 1 ph, 60 hz - to be coupled with standard 2GPM pump use for both supply and return pumps
Option #427AV-05 - Second Standard Pump & Motor Assembly & Automatic Transfer Switch - to automatically alternate each pump-motor (of option 427) into the lead starting position. Pump "RUN-OFF-AUTO" operates modes selector switch. Includes "pump running" amber light for each pump-motor for 1/2" pump outlet only

Boulden Exhaust BOM:

-DKH-Series, Hospital Grade, Carbon Steel Disk Silencer, 10" Pipe Flange Bottom Inlet, 10" Pipe Flange Side (12:00) Outlet, Bottom Lugs (Qty:1)
-Custom Flex Assembly, 8" Caterpillar Flange Inlet, 10" Tube Flange Outlet, 18" Overall Length, 10" Diameter, Carbon Steel (Qty:1)
-Flange Gasket Set (Qty:3)

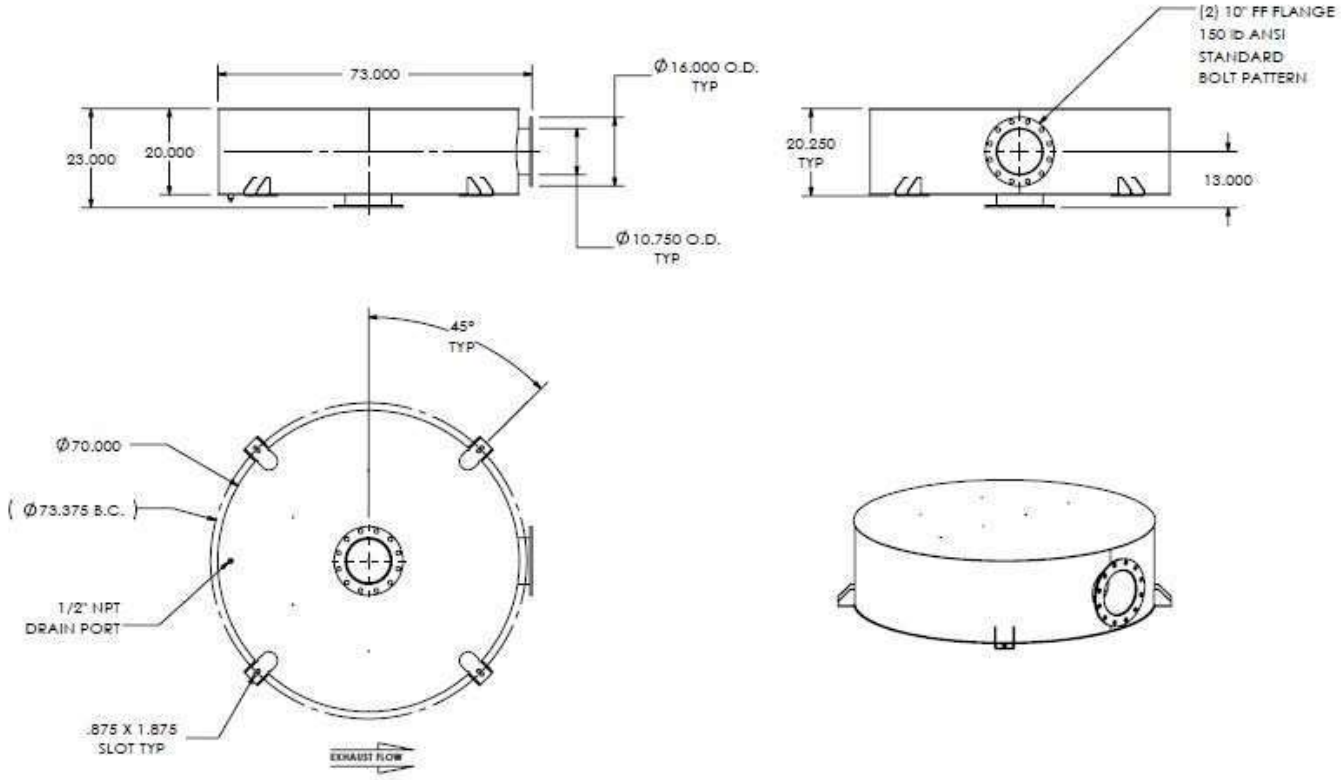

Quantity: 1

Dealer provided components and services:

Description
BOYD AES Technician
Russelectric Switchgear

Russelectric Switchgear Bill of Materials:

Russelectric's proposal consists of furnishing a generator paralleling control system arranged to control the operation three (3) 750KW, 480V/277, 60HZ, 3 phase, 4 wire, 50-Hertz generators and one future generator. Our Bill of is based on specification section 262313 and drawing E6.0. All equipment will be manufactured utilizing standard Russelectric design and components.

Item # 1 –Master Control Cubicle

We propose to furnish a separate Master Control Cubicle, painted ANSI 61 gray with front and rear access as described below. The switchgear shall consist of the following:

Master Control Cubicle (quantity of one), consisting of:

1 - Metal enclosed cubicle with track for circuit breaker lift device
1 - AC voltmeter, 0 to 600 volt scale
1 - Frequency meter, for station bus and generator units, dial type, 55 to 65 hertz scale 1 – Multifunction Meter, Siemens 9410
1 – Ethernet hub
1 - Voltmeter selector switch, reading phase to phase
1 - Master "Auto-Man" selector switch
1 - Solid state best battery selector system
2 - Programmable Logic Controller (PLC), GE Rx3i, complete with analog, and digital, input/output modules, power supplies, communication etc., as required.
1 - Operator Interface Panel (OIP), 23" Panel touch screen for access of PLC timers and set points, engine sequencing, display system status and alarms, and to enable certain master control functions. The operator interface panel contains the following basic screens:

- Main Menu
- System Single Line (with breaker positions)
- Alarm Screen
- Generator Screen
- Load Control Screen
- Load Demand Screen

The following functions can be initiated from the touch screen:

- Load Demand (On/Off Switch Function)
- System No-Load Test (On/Off Switch Function)
- Auto Load Shed (On/Off Switch Function)
- Load Add (Pushbutton Function)
- Load Shed (Pushbutton Function)
- Increase Load Capacity (Pushbutton Function)
- TJC reports

Upon receipt of an alarm, the operator interface panel automatically displays an alarm screen. An amber Operator Interface Alarm Present indicator on the master cubicle door will also illuminate, and the alarm horn sounded.

1 - Main bus over and under voltage/frequency alarm relay, with alarm indication and reset pushbutton
1 - Fail to synchronize time delay
1 - Station alarm horn, with silence push-button and light
1 - Master "auto-man" switch, with red light
1 – Temp Gen/Load bank Selector Switch
1 - Lamp test push-button
1 -Backlit LED annunciation panel with engraved windows for the following conditions:

- Controls not in automatic
- Alarm horn silenced
- Start signal present
- Load shed activated
- Load shed bypassed
- Critical control voltage failure
- Operator interface alarm
- PLC No.1 in control
- PLC No.2 in control

- PLC failure; Solid PLC failure; Flashing PLC low battery
- Main tank low fuel level
- System test
- (2) spares

1 – Sync check relay, Device #25

1 - Circuit breaker control switch

1 - Separate back-lit LED annunciator with engraved windows for the following circuit breaker status indications:

- Circuit breaker opened
- Circuit breaker closed
- Circuit breaker withdrawn

1 - Interior LED Lighting and door activated on/off switch.

1 – 120VAC Duplex receptacle

1 - Set of control wiring, fuses, fuse blocks, terminals, nameplates, etc., as required. All wiring to be labeled at both ends.

<u>Item # 1 –Generator Paralleling Switchgear</u>

We propose to furnish a six (6) cubicle, NEMA 1, switchgear line-up with overhead lift device and arc reduction mode on breakers, painted ANSI 61 gray with front and rear access as described below with top conduit entry. The switchgear shall consist of the following:

<u>Generator Control and Circuit Breaker Cubicles</u>, (quantity of three), each consisting of:

1 - Metal enclosed cubicle with track for circuit breaker lift device
1 - AC voltmeter, scale as required
1 - Voltmeter selector switch for reading phase-to-phase
1 - AC ammeter, scale as required, 5 ampere movement
1 - Ammeter selector switch, four position
1 - AC wattmeter, scale as required
1 - Synchroscope
2 - Synchronizing lamps
1 - Frequency meter, for station bus and generator units, dial type, 55 to 65 hertz scale
1 – Emergency Stop Switch
1 – reverse power relay
1 – Distributed I/O with Network interface module, complete with input/output modules, power supplies, communication etc., as required.
1- Automatic synchronizer, Woodward type SPM-D, or as manufactured by the manufacturer of the engine governor controller
1 - Engine selector switch, with "Lockout/Reset-Stop-Auto-Run" nameplate
1 - Frequency meter switch, with "Bus-Off-Generator" nameplate (key interlocked)
1 - Synchroscope switch, with "On-Off" nameplate (key interlocked)
1 - Circuit breaker control switch
1 - Separate back-lit LED annunciator with engraved windows for the following circuit breaker status indications:

- Circuit breaker opened
- Circuit breaker closed
- Circuit breaker withdrawn

1 - Speed adjust potentiometer, 10 turn with locking dial

1 - Voltage adjust switch
1 - Interior LED Lighting and door activated on/off switch.
1 - Mounting and wiring of governor control unit, as supplied by the engine generator manufacturer 1 - Mounting and wiring of load sharing module, as supplied by the engine generator manufacturer
1 - Lamp test push-button
1 - Back-lit LED annunciator with red indicators for shutdown failure, and amber indicators for alarm conditions. The annunciator windows shall be engraved to indicate the nature of the alarm condition or failure. All alarms will be of the "ring-back" type, i.e., any time the alarm horn is silenced for a failure, the next failure or alarm will re-energize the alarm horn. The following fail circuitry and annunciation shall be provided for the engine control cubicle:

- Engine alarm; summary alarm indication of the type of fault condition shall be displayed on the Operator Interface Panel.
- Engine shutdown; summary alarm indication of the type of fault shutdown condition shall be displayed on the Operator Interface Panel.
- Breaker failure
- Engine not available
- Engine running
- Critical control voltage failure

1- 1600 ampere frame, electrically operated, draw-out, three pole air power circuit breaker, power trip unit. with LSIA rated 100 KAIC at 480 volts, Siemens WL
1 - Set of three (3) potential transformers, ratio as required
1 - Set of three (3) current transformers, ratio as required
1 - Set of three phase 6,000 amperes main and neutral with separate ground bus. All bus to be silver-plated copper
1 - Set of control wiring, fuses, fuse blocks, terminals, nameplates, etc. All wiring to be labeled at both ends
1 – Set of compression lugs for generator power cable connections

Blank Transition Cubicle, (quantity of one), consisting of:

1 - Metal enclosed cubicle with track for circuit breaker lift device
1 - Set of three phase 6,000 amperes main and neutral, with separate ground bus. All bus to be silver-plated copper

Distribution Circuit Breaker Cubicle, (quantity of two), each consisting of:

1 - Metal enclosed cubicle with track for circuit breaker lift device
2 - 1600 ampere frame, manually operated, draw-out, three pole air power circuit breaker, power trip unit. with LSIA rated 100 KAIC at 480 volts, Siemens WL
2 - 800 ampere frame, manually operated, draw-out, three pole air power circuit breaker, power trip unit. with LSIA rated 100 KAIC at 480 volts, Siemens WL
1 - Set of three phase 6,000 amperes main and neutral, with separate ground bus. All bus to be silver-plated copper
1 - Set of control wiring, fuses, fuse blocks, terminals, nameplates, etc. All wiring to be labeled at both ends
3 - Sets of compression lugs for distribution power cable connections

Item # 2– Remote Operator Interface Panel

We propose to furnish a Remote Operator Interface Panel (ROIP) similar to the master OIP, consisting of the following: 1 - NEMA 1 Surface mounted enclosure

1 - Operator Interface Panel (OIP), 23" Hope Industries Panel touch screen for access of PLC timers and set points, engine sequencing, display system status and alarms, and to enable certain master control functions. The operator interface panel contains the following basic screens:

- Main Menu
- System Single Line (with breaker positions)
- Alarm Screen
- Generator Screen
- Load Control Screen
- Load Demand Screen
- TJC reports (Engine Generator Run Report)

The following functions can be initiated from the touch screen:

* Load Demand (On/Off Switch Function)
* System No-Load Test (On/Off Switch Function)
* Auto Load Shed (On/Off Switch Function)
* Load Add (Pushbutton Function) * Load Shed (Pushbutton Function) * Increase Load Capacity (Pushbutton Function)

Upon receipt of an alarm, the operator interface panel automatically displays an alarm screen. An amber Operator Interface Alarm Present indicator on the enclosure will also illuminate, and the alarm horn sounded. All alarms can be reset using the failure-reset pushbutton on the master door

Item #4 – 24V Station Battery and Charger

We propose to furnish one station battery system as follows:

1 – Battery Charger

LaMarche float battery charger/power supply, solid state, transistor controlled magnetic amplifier type with silicon diodes, DC voltage regulated for +/-10% AC line voltage variations, inherently current limiting, complete with AC and DC terminal boards, isolation transformer, and the following characteristics and accessories:

Model No: A12B-25-24V-A1 Nominal DC Amps: 25 Nominal DC Volts: 24 DC Output Regulation: +/- 0.5%
AC Input: 120/1/60 Battery Type: Nickel Cadmium No. of Cells: 20 Filtering: 30 mv
On/Off Battery Mounting: Wall/Floor Unit Weight: 135 lbs.
Dimensions: 15.375" W x 11" D x 23.75" H

1. Separate Float & Equalize Potentiometers
2. Float/Equalize Switch
3. Float & Equalize Lights
4. AC Power Failure Relay with Form "C" Contacts
5. AC Surge Suppressors
6. Two Pole AC Breaker
7. Two Pole DC Battery Breaker
8. Combined Alarm Package (46E), including:

A. Combination Digital Voltmeter/Ammeter with Selector Switch
B. Equalize LED
C. Low D.C. Current Alarm LED and two form "C" contacts
D. High D.C. Voltage Alarm LED and two form "C" contacts
E. Low D.C. Voltage Alarm LED and two form "C" contacts
F. Critical (second) Low D.C. Voltage Alarm LED and two form "C" contacts
G. High Voltage Shutdown Alarm LED and one form "C" contact
H. A.C. Power Failure Alarm LED and two form "C" contacts
I. Rectifier Failure/Summary Alarm Relay and two form "C" contacts
J. Multi-mode Digital Equalize Timer, adjustable 1-144 hours with five selectable modes: 1) Standard 2) 7-day
   3) 14-day
   4) 30-day
   5) Equalize after low D.C. voltage condition

1 – Two Step Seismic Rack

Model: EQ1USSS002009001
Dimensions: 35.43" L x 29.13" W x 26.81" H
Weight: 500 lbs.(including batteries)

1 – Set 24V Nickel Cadmium Battery

Saft low maintenance nicad battery
Model: 5/UP1M125-4
No. of Cells: 20
Nominal Voltage: 24VDC

1 – 24V DC Panelboard

24VDC Panelboard, in Nema 1 wall mount enclosure

Item #5 – Bypass/Isolation Automatic Transfer Switch

Russelectric microprocessor controlled automatic transfer switch designed for switching all classes of loads and rated for continuous duty, with the following characteristics:

ATS-10

1 **Model No**: RTS30-ABLC10004AMF1

Withstand: 30 Cycle
Configuration: Closed Transition
Operation: Automatic
Amperage: 1000
Hertz: 60
Phase: 3
Mounting: Freestanding

Switch Type: Transfer Switch with Bypass
Bypass Type: Fail Safe Bypass
Poles: 4
Voltage: 277/480
Wire: 4
Lugs: Mechanical
Enclosure: NEMA 1

Closing and Withstand rating: **30 Cycle =** 65,000 RMS
3 Cycle = 85,000 RMS

Dimensions: 43”W x 91.5”H x 59.5”D

The dual operator automatic transfer switch/ bypass isolation switch shall be mounted in a common enclosure. The bypass switch shall be a two source, load break design, offering direct, one step bypass to either normal or emergency regardless of the position of the transfer switch. The following accessories shall be provided:

CB1	-	Auxiliary contact closed when switch is bypassed source 1, wired to terminal strip. Quantity of one.
CB2	-	Auxiliary contact closed when switch is bypassed to source 2, wired to terminal strip. Quantity of one.
CBTR	-	Circuitry that provides dry contacts to shunt trip either the normal or the emergency breaker in the event that both sources are connected for longer than 100ms
CES	-	Form “C” contact to initiate engine starting or other customer functions.
CMES	-	Bypass switch and transfer switch contacts in parallel with the engine start circuitry to maintain start signal when the transfer switch or the bypass switch are in the source 2 position.
CS1A	-	Form “C” contact to indicate source 1 availability. This relay action is before engine starting time delay, with source 1 status relay. Quantity of two
CS1P	-	Auxiliary contact closed to source 1 positions, wired to terminal strip for customer connection. Quantity of two
CS2A	-	Form “C” contact to indicate source 2 availability with source 2 status relay. Quantity of two
CS2P	-	Auxiliary contact closed on source 2 position, wired to terminal strip for customer connection. Quantity of two
FTT	-	Fail to transfer timer. Timer provided to indicate the transfer switch has failed to transfer. Solid state type, adjustable from 0.1 – 1.0 seconds, factory set at 0.3 seconds
LT6	-	Green LED to indicate source 1 power available. (1) Nameplate marked: “SOURCE 1 POWER AVAILABLE”
LT7	-	Red LED to indicate source 2 power available. (1) Nameplate marked: “SOURCE 2 POWER AVAILABLE”
LT8	-	Green LED to indicate switch in source 1 position. (1) Nameplate marked: “SOURCE 1 POSITION.”
LT9	-	Red LED to indicate switch in source 2 position. (1) Nameplate marked: “SOURCE 2 POSITION.”
LT16	-	Green LED to indicate transfer switch bypassed to source 1
LT17	-	Red LED to indicate transfer switch bypassed to source 2
LT18	-	Red LED to indicate transfer switch isolated. Isolating contacts open, transfer switch bypassed and isolated
LT20	-	Red LED on Operator Interface Panel to indicate transfer inhibit
LT21	-	Red LED on Operator Interface Panel to indicate alarm condition
RPTCS	-	Russelectric RPTCS Configuration 5 controller with power metering and both serial and Ethernet communication. Power metering includes CTs and shorting block, to display Voltage (both sources), Current, Frequency, PF, KW, KVA, KVAR, MWH, Voltage and Current Imbalance, Voltage and Current Harmonics (% THD up to 8th order)
SCF	-	Synchronizing check function to prevent transfer from source 1 to source 2 or retransfer from source 2 to source1 until both sources are within acceptable limits of synchronism
TDEC	-	Engine overrun to provide unloaded engine operation after retransfer to source 1 (Delay for engine cool down), programmable 0.0-60.0 min:ss, factory set at 5 minutes
TDES	-	Time delay to override momentary source 1 power outages to delay engine start signal and transfer switch operation. Programmable 0.0-259.0 min:ss, factory set at 3.0 seconds (A time setting greater than 10 seconds requires an external 24 volt DC, 1 amp power supply)
TDNNP	-	Time delay to control contact transition time from neutral to non-preferred source. Programmable 0.010.0 min:ss, factory set at 1 second.
TDNP	-	Time delay to control contact transition time from neutral to preferred source. Programmable 0.010.0 min:ss, factory set at 1 second.
TDNPS	-	Time delay on transfer to non-preferred source. Programmable 0.0-259.0 min:ss factory set at 3.0 seconds

TDPS - Time delay on retransfer to preferred source. Programmable 0.0-259.0 min:ss, factory set at 30 minutes

VFS1 - Programmable set points: Under voltage sensing of source 1 to restore at 90% and fail at 80%. Over voltage sensing to pick up at 110% and drop out at 108%. Under frequency sensing is adjustable from 45 Hz to 60 Hz. Failure set at 59.0 Hz and restore set at 59.5 Hz. Over frequency sensing is adjustable from 60.1 Hz to 69.8 Hz. Failure set at 69.8 Hz and restore set at 66.0 Hz.

VFS2 - Programmable set points: Under voltage sensing of source 2 to restore at 90% and fail at 80%. Over voltage sensing to pick up at 110% and drop out at 108%. Under frequency sensing is adjustable from 45 Hz to 60 Hz. Failure set at 59.0 Hz and restore set at 59.5 Hz. Over frequency sensing is adjustable from 60.1 Hz to 69.8 Hz. Failure set at 69.8 Hz and restore set at 66.0 Hz

XF1 - Load test function to simulate source 1 power failure

XK18 - Two position key operated transition mode selector switch. (1) Legend marked: “CLOSED” – “OPEN”, (1) name plate marked “Transition mode selector switch

GENERATOR SET

Cat® C27

Diesel Generator Sets

Image shown may not reflect actual configuration

Bore – mm (in)	137.2 (5.4)
Stroke – mm (in)	152.4 (6.0)
Displacement – L (in³)	27.03 (1649.47)
Compression Ratio	16.5:1
Aspiration	TA
Fuel System	MEUI
Governor Type	ADEM™ A4

Standby 60 Hz ekW (kVA)	Prime 60 Hz ekW (kVA)	Standby 60 Hz ekW (kVA)	Prime 60 Hz ekW (kVA)	Emissions Performance
750 (937)	680 (850)	800 (1000)	725 (906)	U.S. EPA Emergency Stationary Use Only (Tier 2)

Standard Features

Cat® Diesel Engine
- Meets U.S. EPA Emergency Stationary Use Only (Tier 2) emission standards
- Reliable performance proven in thousands of applications worldwide

Generator Set Package
- Accepts 100% block load in one step and meets NFPA 110 loading requirements
- Conforms to ISO 8528-5 G3 load acceptance requirements
- Reliability verified through torsional vibration, fuel consumption, oil consumption, transient performance, and endurance testing

Alternators
- Superior motor starting capability minimizes need for oversizing generator
- Designed to match performance and output characteristics of Cat diesel engines

Cooling System
- Cooling systems available to operate in ambient temperatures up to 50°C (122°F)
- Tested to ensure proper generator set cooling

EMCP 4 Control Panels
- User-friendly interface and navigation
- Scalable system to meet a wide range of installation requirements
- Expansion modules and site specific programming for specific customer requirements

Warranty
- 24 months/1000-hour warranty for standby and mission critical ratings
- 12 months/unlimited hour warranty for prime and continuous ratings
- Extended service protection is available to provide extended coverage options

Worldwide Product Support
- Cat dealers have over 1,800 dealer branch stores operating in 200 countries
- Your local Cat dealer provides extensive post-sale support, including maintenance and repair agreements

Financing
- Caterpillar offers an array of financial products to help you succeed through financial service excellence
- Options include loans, finance lease, operating lease, working capital, and revolving line of credit
- Contact your local Cat dealer for availability in your region

Optional Equipment

Engine

Air Cleaner
- ❑ Single element
- ❑ Dual element
- ❑ Heavy duty

Muffler
- ❑ Residential grade (25 dB)

Starting
- ❑ Standard batteries
- ❑ Oversized batteries
- ❑ Standard electric starter(s)
- ❑ Jacket water

Alternator

Output voltage
- ❑ 208V
- ❑ 240V
- ❑ 480V
- ❑ 600V

Temperature Rise (over 40°C ambient)
- ❑ 150°C
- ❑ 125°C
- ❑ 105°C
- ❑ 80°C

Winding type
- ❑ Random wound

Excitation
- ❑ Internal excitation (IE)

Attachments
- ❑ Anti-condensation heater
- ❑ Stator and bearing temperature monitoring and protection

Power Termination

Type
- ❑ Bus bar
- ❑ Circuit breaker
- ❑ 400A ❑ 800A
- ❑ 1200A ❑ 1600A
- ❑ 2000A ❑ 2500A
- ❑ 3000A
- ❑ UL ❑ IEC
- ❑ 3-pole ❑ 4-pole
- ❑ Manually operated
- ❑ Electrically operated

Trip Unit
- ❑ LSI ❑ LSI-G
- ❑ LSIG-P

Factory Enclosure

- ❑ Sound attenuated

Attachments
- ❑ Cold weather bundle
- ❑ DC lighting package
- ❑ Motorized louvers

Fuel Tank

- ❑ 1000 gal (3785 L)
- ❑ 2000 gal (7571 L)
- ❑ 3600 gal (13627 L)

Control System

Controller
- ❑ EMCP 4.2B
- ❑ EMCP 4.3
- ❑ EMCP 4.4

Attachments
- ❑ Local annunciator module
- ❑ Remote annunciator module
- ❑ Expansion I/O module
- ❑ Remote monitoring software

Charging

- ❑ Battery charger – 10A
- ❑ Battery charger – 20A
- ❑ Battery charger – 30A

Vibration Isolators

- ❑ Rubber
- ❑ Spring
- ❑ Seismic rated

Cat Connect

Connectivity
- ❑ Ethernet
- ❑ Cellular
- ❑ Satellite

Extended Service Options

Terms
- ❑ 2 year (prime)
- ❑ 3 year
- ❑ 5 year
- ❑ 10 year

Coverage
- ❑ Silver
- ❑ Gold
- ❑ Platinum
- ❑ Platinum Plus

Ancillary Equipment

- ❑ Automatic transfer switch (ATS)
- ❑ Uninterruptible power supply (UPS)
- ❑ Paralleling switchgear
- ❑ Paralleling controls

Certifications

- ❑ UL 2200 Listed
- ❑ CSA
- ❑ IBC seismic certification
- ❑ OSHPD pre-approval

Note: *Some options may not be available on all models. Certifications may not be available with all model configurations. Consult factory for availability.*

Package Performance

Performance	Standby		Prime		Standby		Prime	
Frequency	60 Hz		60 Hz		60 Hz		60 Hz	
Gen set power rating with fan	750 ekW		680 ekW		800 ekW		725 ekW	
Gen set power rating with fan @ 0.8 power factor	937 kVA		850 kVA		1000 kVA		906 kVA	
Emissions	EPA ESE (Tier 2)		EPA ESE (Tier 2)		EPA ESE (Tier 2)		EPA ESE (Tier 2)	
Performance number	DM9071-03		DM9073-02		DM7696-02		DM9069-02	
Fuel Consumption								
100% load with fan – L/hr (gal/hr)	202.9	(53.6)	187.4	(49.5)	216.9	(57.3)	199.6	(52.7)
75% load with fan – L/hr (gal/hr)	162.4	(42.9)	149.6	(39.5)	171.7	(45.4)	157.8	(41.7)
50% load with fan – L/hr (gal/hr)	116.2	(30.7)	107.0	(28.3)	122.3	(32.3)	112.5	(29.7)
25% load with fan – L/hr (gal/hr)	70.6	(18.7)	66.0	(17.4)	73.9	(19.5)	69.0	(18.2)
Cooling System								
Radiator air flow restriction (system) – kPa (in. water)	0.12	(0.48)	0.12	(0.48)	0.12	(0.48)	0.12	(0.48)
Radiator air flow – m^3/min (cfm)	1200	(42377)	1200	(42377)	1200	(42377)	1200	(42377)
Engine coolant capacity – L (gal)	55.0	(14.5)	55.0	(14.5)	55.0	(14.5)	55.0	(14.5)
Radiator coolant capacity – L (gal)	41.0	(10.0)	41.0	(10.0)	41.0	(10.0)	41.0	(10.0)
Total coolant capacity – L (gal)	96.0	(24.5)	96.0	(24.5)	96.0	(24.5)	96.0	(24.5)
Inlet Air								
Combustion air inlet flow rate – m^3/min (cfm)	58.7	(2073.6)	56.0	(1977.7)	62.8	(2216.4)	60.3	(2129.4)
Exhaust System								
Exhaust stack gas temperature – °C (°F)	509.3	(948.7)	502.5	(936.5)	511.4	(952.5)	500.6	(933.0)
Exhaust gas flow rate – m^3/min (cfm)	158.9	(5610.2)	149.7	(5285.5)	170.3	(6011.7)	160.7	(5674.4)
Exhaust system backpressure (maximum allowable) – kPa (in. water)	6.7	(27.0)	6.7	(27.0)	6.7	(27.0)	6.7	(27.0)
Heat Rejection								
Heat rejection to jacket water – kW (Btu/min)	324	(18441)	307	(17433)	330	(18785)	320	(18191)
Heat rejection to exhaust (total) – kW (Btu/min)	738	(41994)	693	(39387)	796	(45257)	741	(42135)
Heat rejection to aftercooler – kW (Btu/min)	139	(7898)	123	(6970)	162	(9235)	146	(8320)
Heat rejection to atmosphere from engine – kW (Btu/min)	110	(6249)	92	(5238)	110	(6240)	89	(5074)
Heat rejection from alternator – kW (Btu/min)	53	(3014)	47	(2644)	40	(2292)	37	(2081)
Emissions* (Nominal)								
NOx mg/Nm^3 (g/hp-h)	2637.1	(5.25)	2330.9	(4.68)	2580.0	(5.18)	2283.7	(4.61)
CO mg/Nm^3 (g/hp-h)	123.9	(0.25)	147.4	(0.29)	115.1	(0.23)	135.6	(0.27)
HC mg/Nm^3 (g/hp-h)	11.2	(0.03)	10.9	(0.02)	12.5	(0.03)	12.2	(0.03)
PM mg/Nm^3 (g/hp-h)	8.8	(0.02)	8.8	(0.02)	9.7	(0.02)	9.0	(0.02)

**mg/Nm^3 levels are corrected to 5% O_2. Contact your local Cat dealer for further information.*

Weights and Dimensions

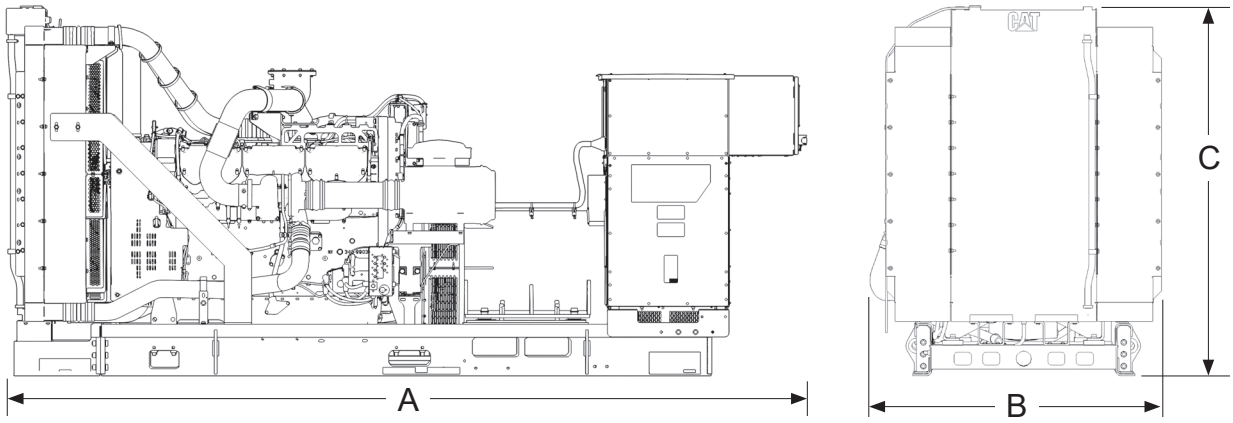

Dim "A" mm (in)	Dim "B" mm (in)	Dim "C" mm (in)	Dry Weight kg (lb)
4674 (184.0)	1723 (67.8)	2162 (85.1)	6622 (14,600)

Note: *For reference only. Do not use for installation design. Contact your local Cat dealer for precise weights and dimensions.*

Due to custom order diminsions are estimated only

Ratings Definitions

Standby
Output available with varying load for the duration of the interruption of the normal source power. Average power output is 70% of the standby power rating. Typical operation is 200 hours per year, with maximum expected usage of 500 hours per year.

Prime
Output available with varying load for an unlimited time. Average power output is 70% of the prime power rating. Typical peak demand is 100% of prime rated ekW with 10% overload capability for emergency use for a maximum of 1 hour in 12. Overload operation cannot exceed 25 hours per year.

Applicable Codes and Standards
AS 1359, CSA C22.2 No. 100-04, UL 142, UL 489, UL 869, UL 2200, NFPA 37, NFPA 70, NFPA 99, NFPA 110, IBC, IEC 60034-1, ISO 3046, ISO 8528, NEMA MG1-22, NEMA MG1-33, 2014/35/EU, 2006/42/EC, 2014/30/EU.

Note: Codes may not be available in all model configurations. Please consult your local Cat dealer for availability.

Data Center Applications
- ISO 8528-1 Data Center Power (DCP) compliant per DCP application of Cat diesel generator set prime power rating.
- All ratings Tier III/Tier IV compliant per Uptime Institute requirements.
- All ratings ANSI/TIA-942 compliant for Rated-1 through Rated-4 data centers.

Fuel Rates
Fuel rates are based on fuel oil of 35º API [16°C (60ºF)] gravity having an LHV of 42,780 kJ/kg (18,390 Btu/lb) when used at 29ºC (85ºF) and weighing 838.9 g/liter (7.001 lbs/U.S. gal.)

www.cat.com/electricpower
©2019 Caterpillar
All rights reserved.

Materials and specifications are subject to change without notice.
The International System of Units (SI) is used in this publication.

CAT, CATERPILLAR, LET'S DO THE WORK, their respective logos, "Caterpillar Yellow", the "Power Edge" and Cat "Modern Hex" trade dress as well as corporate and product identity used herein, are trademarks of Caterpillar and may not be used without permission.

Permanent Magnet Excitation

Block Diagram of Diesel Generator set using Permanent Magnet Generator (PMG) excitation system

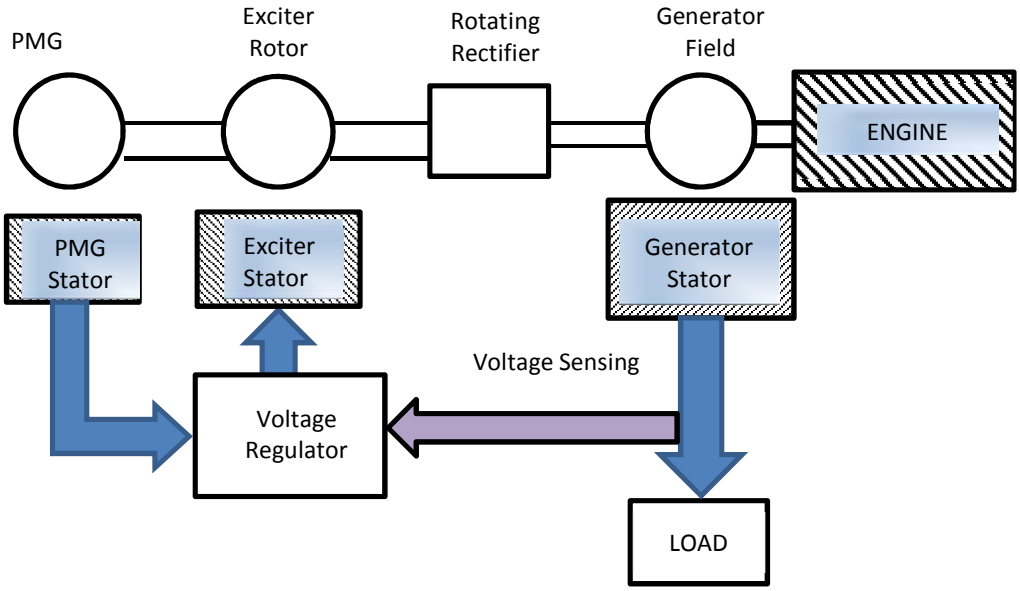

In Diesel generator sets employing PMG excitation system a small permanent magnet generator (PMG) is attached to the same shaft as the main generator at the non-drive end. The PMG stator produces clean power source for the voltage regulator.

The PMG excitation system can be retrofittable on most alternators. It has the following benefits over a self-excitation system.

1. Provides reliable, isolated power which is independent of the generator output
2. Ability to provide sustained short circuit current (up to 3 times the rated current) during fault conditions and allows breaker discrimination.
3. Provides clean and uninterrupted power to the voltage regulator even when the diesel generator set is supplying non-linear or harmonic loads.
4. Can provide reduced transient voltage dip on motor starting compared to a self-excited diesel generator set.

GENERATOR DATA

(AT400240)-ENGINE (BAA126422A)-CEM

Selected Model

Engine: C27	**Generator Frame:** 597	**Genset Rating (kW):** 750.0	**Line Voltage:** 480
Fuel: Diesel	**Generator Arrangement:** 1366589	**Genset Rating (kVA):** 937.0	**Phase Voltage:** 277
Frequency: 60	**Excitation Type:** Permanent Magnet	**Pwr. Factor:** 0.8	**Rated Current:** 1127.0
Duty: STANDBY	**Connection:** SERIES STAR	**Application:** EPG	**Status:** Current

Version: 41205 /39106 /41309 /10391

Spec Information

Generator Specification

Frame: 597 **Type:** SR4B	**No. of Bearings:** 1
Winding Type: RANDOM WOUND	**Flywheel:** 18.0
Connection: SERIES STAR	**Housing:** 0
Phases: 3	**No. of Leads:** 12
Poles: 4	**Wires per Lead:** 4
Sync Speed: 1800	**Generator Pitch:** 0.8

Generator Efficiency

Per Unit Load	kW	Efficiency %
0.25	187.5	93.1
0.5	375.0	95.7
0.75	562.5	96.3
1.0	750.0	96.4

Reactances	Per Unit	Ohms
SUBTRANSIENT - DIRECT AXIS X''_d	0.1274	0.0313
SUBTRANSIENT - QUADRATURE AXIS X''_q	0.1306	0.0321
TRANSIENT - SATURATED X'_d	0.1908	0.0469
SYNCHRONOUS - DIRECT AXIS X_d	2.7091	0.6658
SYNCHRONOUS - QUADRATURE AXIS X_q	1.3741	0.3377
NEGATIVE SEQUENCE X_2	0.1290	0.0317
ZERO SEQUENCE X_0	0.0618	0.0152

Time Constants	Seconds
OPEN CIRCUIT TRANSIENT - DIRECT AXIS T'_{d0}	3.1170
SHORT CIRCUIT TRANSIENT - DIRECT AXIS T'_d	0.2197
OPEN CIRCUIT SUBSTRANSIENT - DIRECT AXIS T''_{d0}	0.0093
SHORT CIRCUIT SUBSTRANSIENT - DIRECT AXIS T''_d	0.0071
OPEN CIRCUIT SUBSTRANSIENT - QUADRATURE AXIS T''_{q0}	0.0085
SHORT CIRCUIT SUBSTRANSIENT - QUADRATURE AXIS T''_q	0.0067
EXCITER TIME CONSTANT T_e	0.1400
ARMATURE SHORT CIRCUIT T_a	0.0305

Short Circuit Ratio: 0.51	Stator Resistance = 0.0061 Ohms	Field Resistance = 1.855 Ohms

Voltage Regulation

Voltage level adjustment: +/-	5.0%
Voltage regulation, steady state: +/-	0.5%
Voltage regulation with 3% speed change: +/-	0.5%
Waveform deviation line - line, no load: less than	5.0%
Telephone influence factor: less than	50

Generator Excitation

	No Load	Full Load, (rated) pf	
		Series	Parallel
Excitation voltage:	9.02 Volts	39.26 Volts	Volts
Excitation current	2.0 Amps	7.16 Amps	Amps

Selected Model

Engine: C27	**Generator Frame:** 597	**Genset Rating (kW):** 750.0	**Line Voltage:** 480
Fuel: Diesel	**Generator Arrangement:** 1366589	**Genset Rating (kVA):** 937.0	**Phase Voltage:** 277
Frequency: 60	**Excitation Type:** Permanent Magnet	**Pwr. Factor:** 0.8	**Rated Current:** 1127.0
Duty: STANDBY	**Connection:** SERIES STAR	**Application:** EPG	**Status:** Current

Version: 41205 /39106 /41309 /10391

Generator Mechanical Information

Center of Gravity

Dimension X	-767.8 mm	-30.2 IN.
Dimension Y	0.0 mm	0.0 IN.
Dimension Z	0.0 mm	0.0 IN.

- "X" is measured from driven end of generator and parallel to rotor. Towards engine fan is positive. See General Information for details
- "Y" is measured vertically from rotor center line. Up is positive.
- "Z" is measured to left and right of rotor center line. To the right is positive.

Generator WT = 2120 kg * Rotor WT = 768 kg * Stator WT = 1351 kg
4,674 LB 1,693 LB 2,978 LB

Rotor Balance = 0.0508 mm deflection PTP
Overspeed Capacity = 150% of synchronous speed

Generator Torsional Data

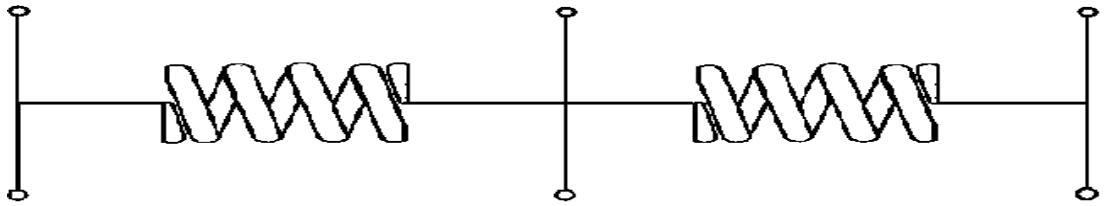

J1 = Coupling and Fan **J2 = Rotor TOTAL J = J1 + J2 + J3** **J3 = Exciter End**

K1 = Shaft Stiffness between J1 + J2 (Diameter 1) **K2 = Shaft Stiffness between J2 + J3 (Diameter 2)**

J1	K1	Min Shaft Dia 1	J2	K2	Min Shaft Dia 2	J3
11.8 LB IN. s^2	117.7 MLB IN./rad	5.0 IN.	101.2 LB IN. s^2	20.4 MLB IN./rad	3.3 IN.	1.5 LB IN. s^2
1.336 N m s^2	13.3 MN m/rad	127.0 mm	11.437 N m s^2	2.3 MN m/rad	83.8 mm	0.171 N m s^2

Total J
114.6 LB IN. s^2
12.944 N m s^2

Selected Model

Engine: C27	**Generator Frame:** 597	**Genset Rating (kW):** 750.0	**Line Voltage:** 480
Fuel: Diesel	**Generator Arrangement:** 1366589	**Genset Rating (kVA):** 937.0	**Phase Voltage:** 277
Frequency: 60	**Excitation Type:** Permanent Magnet	**Pwr. Factor:** 0.8	**Rated Current:** 1127.0
Duty: STANDBY	**Connection:** SERIES STAR	**Application:** EPG	**Status:** Current

Version: 41205 /39106 /41309 /10391

Generator Cooling Requirements - Temperature - Insulation Data

Cooling Requirements:		Temperature Data: (Ambient 40 ^{0}C)	
Heat Dissipated:	28.0 kW	**Stator Rise:**	130.0 ^{0}C
Air Flow:	112.2 m^3/min	**Rotor Rise:**	130.0 ^{0}C

Insulation Class: H

Insulation Reg. as shipped: 100.0 MΩ minimum at 40 ^{0}C

Thermal Limits of Generator

Frequency:	60 Hz
Line to Line Voltage:	480 Volts
B BR 80/40	752.0 kVA
F BR -105/40	906.0 kVA
H BR - 125/40	1000.0 kVA
F PR - 130/40	1000.0 kVA

Selected Model

Engine: C27	**Generator Frame:** 597	**Genset Rating (kW):** 750.0	**Line Voltage:** 480
Fuel: Diesel	**Generator Arrangement:** 1366589	**Genset Rating (kVA):** 937.0	**Phase Voltage:** 277
Frequency: 60	**Excitation Type:** Permanent Magnet	**Pwr. Factor:** 0.8	**Rated Current:** 1127.0
Duty: STANDBY	**Connection:** SERIES STAR	**Application:** EPG	**Status:** Current

Version: 41205 /39106 /41309 /10391

Starting Capability & Current Decrement
Motor Starting Capability (0.4 pf)

SKVA	Percent Volt Dip
128	2.5
262	5.0
403	7.5
553	10.0
710	12.5
878	15.0
1,055	17.5
1,243	20.0
1,444	22.5
1,658	25.0
1,886	27.5
2,131	30.0
2,394	32.5
2,678	35.0
2,984	37.5
3,315	40.0

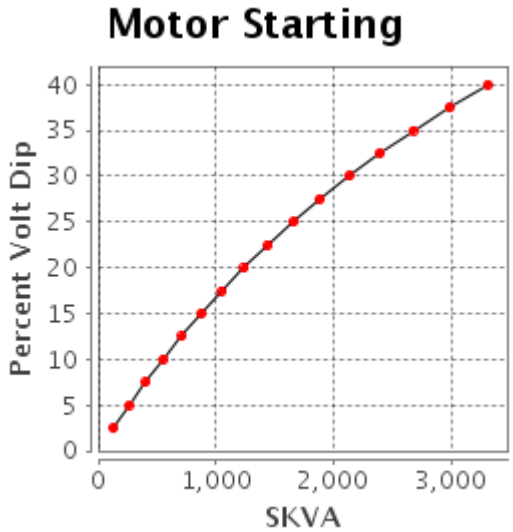

Current Decrement Data

E Time Cycle	AMP
0.0	8,773
1.0	5,793
2.0	5,175
3.0	4,813
4.0	4,497
5.0	4,207
7.5	3,570
10.0	3,044
12.5	2,608
15.0	2,391
20.0	2,460
25.0	2,658
30.0	2,878
35.0	3,094
40.0	3,177
45.0	3,187

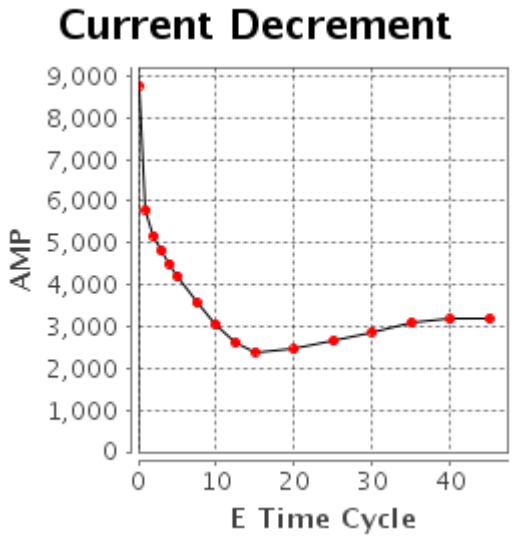

Instantaneous 3 Phase Fault Current: 8773 Amps **Instantaneous Line - Line Fault Current:** 7553 Amps

Instantaneous Line - Neutral Fault Current: 10537 Amps

Selected Model

Engine: C27	**Generator Frame:** 597	**Genset Rating (kW):** 750.0	**Line Voltage:** 480
Fuel: Diesel	**Generator Arrangement:** 1366589	**Genset Rating (kVA):** 937.0	**Phase Voltage:** 277
Frequency: 60	**Excitation Type:** Permanent Magnet	**Pwr. Factor:** 0.8	**Rated Current:** 1127.0
Duty: STANDBY	**Connection:** SERIES STAR	**Application:** EPG	**Status:** Current

Version: 41205 /39106 /41309 /10391

Generator Output Characteristic Curves
Open Circuit Curve

Field Current	Line - Line Volt
0.0	0
7.3	288
8.7	336
10.4	384
12.7	432
16.5	480
23.8	528
39.2	576
73.9	624
153.5	672

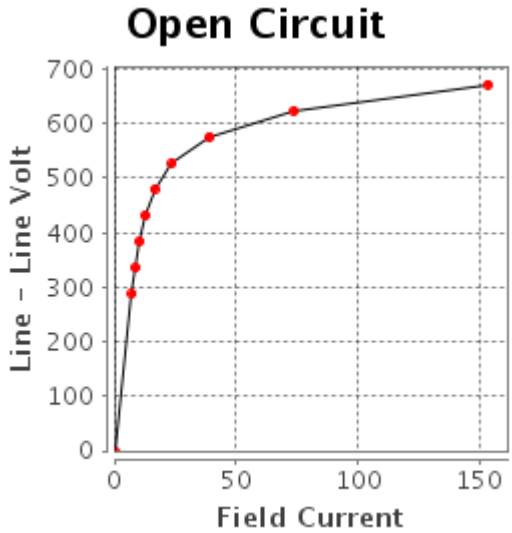

Short Circuit Curve

Field Current	Armature Current
0.0	0
18.6	677
21.7	789
24.8	902
27.9	1,015
31.0	1,128
34.1	1,240
37.2	1,353
40.3	1,466
43.4	1,579

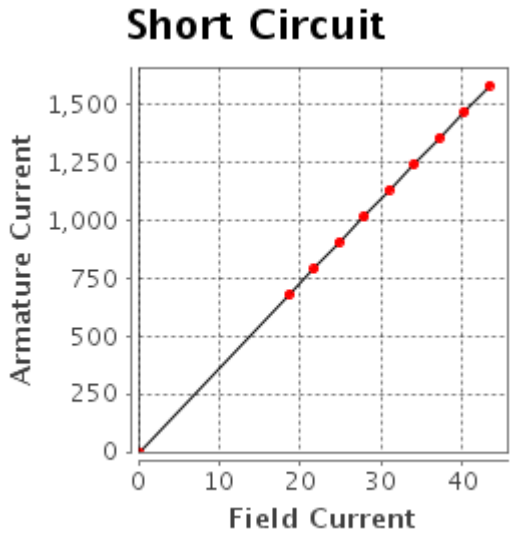

Selected Model

Engine: C27	**Generator Frame:** 597	**Genset Rating (kW):** 750.0	**Line Voltage:** 480
Fuel: Diesel	**Generator Arrangement:** 1366589	**Genset Rating (kVA):** 937.0	**Phase Voltage:** 277
Frequency: 60	**Excitation Type:** Permanent Magnet	**Pwr. Factor:** 0.8	**Rated Current:** 1127.0
Duty: STANDBY	**Connection:** SERIES STAR	**Application:** EPG	**Status:** Current

Version: 41205 /39106 /41309 /10391

Generator Output Characteristic Curves
Zero Power Factor Curve

Field Current	Line - Line Volt
31.0	0
39.7	240
41.5	288
44.0	336
48.2	384
56.4	432
74.1	480
113.9	528
205.7	576
419.3	624

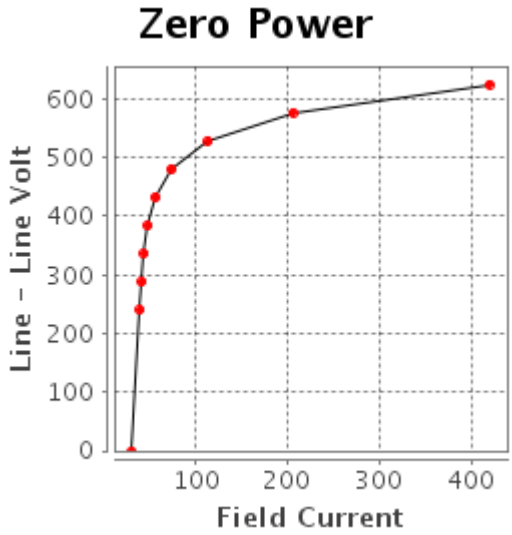

Air Gap Curve

Field Current	Line - Line Volt
0.0	0
7.2	288
8.4	336
9.6	384
10.8	432
12.0	480
13.1	528
14.3	576
15.5	624
16.7	672

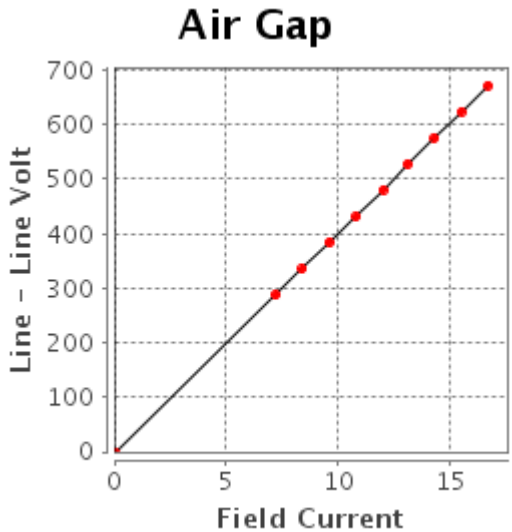

Selected Model

Engine: C27	**Generator Frame:** 597	**Genset Rating (kW):** 750.0	**Line Voltage:** 480
Fuel: Diesel	**Generator Arrangement:** 1366589	**Genset Rating (kVA):** 937.0	**Phase Voltage:** 277
Frequency: 60	**Excitation Type:** Permanent Magnet	**Pwr. Factor:** 0.8	**Rated Current:** 1127.0
Duty: STANDBY	**Connection:** SERIES STAR	**Application:** EPG	**Status:** Current

Version: 41205 /39106 /41309 /10391

Reactive Capability Curve

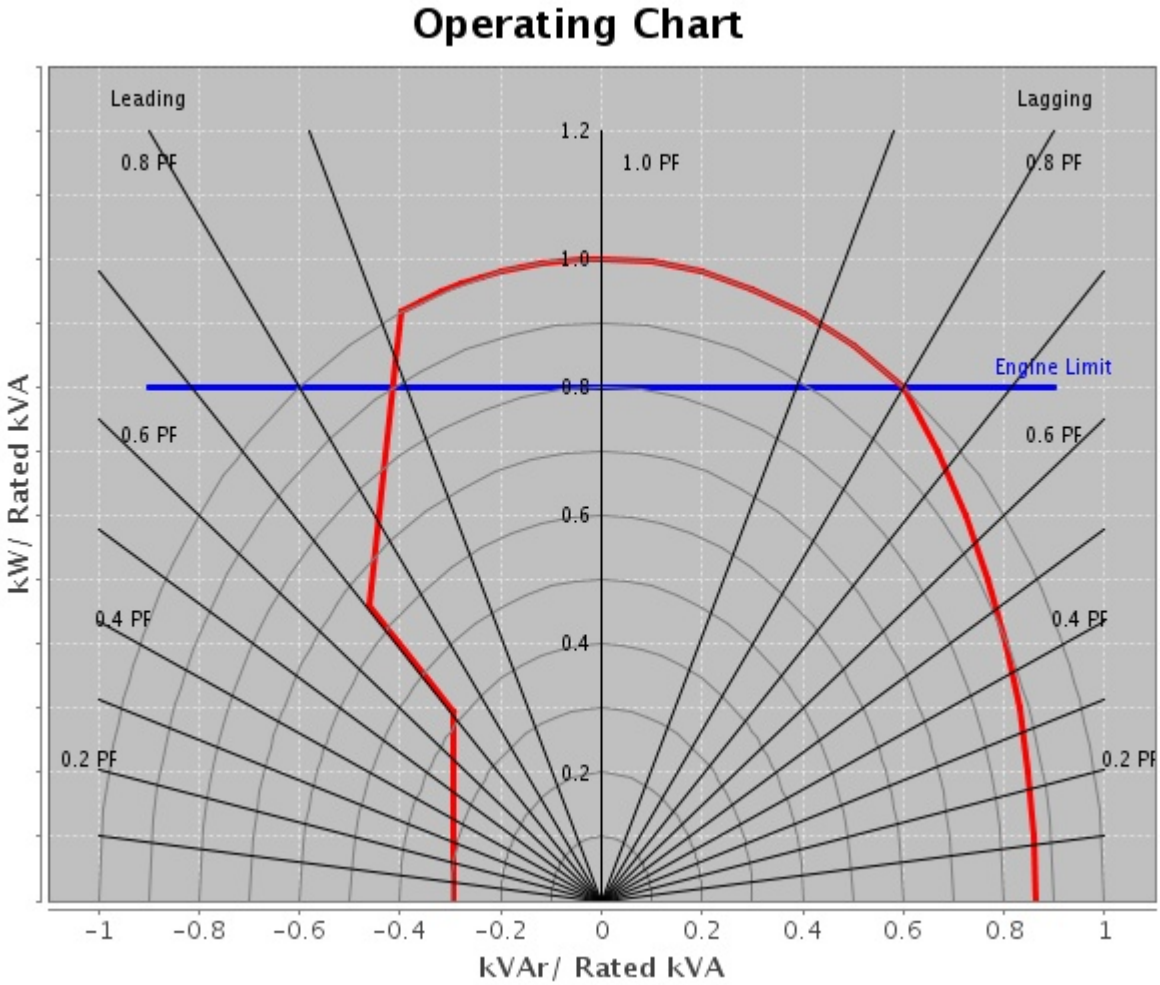

General Information

DM7802
GENERATOR GENERAL INFORMATION

I. GENERATOR MOTOR STARTING CAPABILITY CURVES
A. THE MOTOR STARTING CURVES ARE REPRESENTATIVE OF THE DATA OBTAINED BY THE FOLLOWING PROCEDURE:
1. THE CATERPILLAR GENERATOR IS DRIVEN BY A SYNCHRONOUS DRIVER.
2. VARIOUS SIZE THREE PHASE INDUCTION MOTORS (NEMA CODE F) ARE STARTED ACROSS THE LINE LEADS OF THE UNLOADED GENERATOR.
3. THE RESULTING VOLTAGE DIPS ARE RECORDED WITH AN OSCILLOSCOPE.
4. MOTOR HORSEPOWER HAS BEEN CONVERTED TO STARTING KILOVOLT AMPERES (SKVA).
5. RECORDED VOLTAGE DIPS HAVE BEEN EXPRESSED AS A OF GENERATOR RATED VOLTAGE.

II. USE OF THE MOTOR STARTING CAPABILITY CURVES.
A. CALCULATE THE SKVA REQUIRED BY THE MOTOR FOR FULL VOLTAGE STARTING ACROSS THE LINE IF THE VALUE IS NOT LISTED ON THE MOTOR DATA PLATE.
1. MOTORS CONFORMING TO NEMA STANDARDS
MULTIPLY THE MOTOR HORSEPOWER BY THE NEMA SKVA/HP FIGURE. FOR NEMA CODE F,USE 5.3 SKVA/HP; FOR NEMA CODE G, USE 6.0 SKVA/HP.
2. ALL OTHER MOTORS:
MULTIPLY THE RATED VOLTAGE BY THE LOCKED ROTOR AMPERE AND BY 0.001732. (IF THE LOCKED ROTOR AMPERES ARE NOT LISTED, MULTIPLY THE FULL LOAD (RUNNING) AMPERES BY
B. USE THE ABOVE SKVA WITH THE MOTOR STARTING TABLE.
1. ACROSS LINE STARTING:
READ ACROSS THE ROW OF "ACROSS THE LINE STARTING SKVA
IF THE DESIRED VALUE OF SKVA IS NOT GIVEN, CALCULATE THE DIP BY FINDING THE PROPER SKVA INTERVAL AND INTERPOLATING AS FOLLOWS:
SKVA1 IS THE SKVA TABLE ENTRY JUST SMALLER THAN THE DESIRED SKVA, DIP1 IS THE DIP FOR SKVA2, AND SKVA2 IS THE SKVA TABLE ENTRY JUST GREATER THAN THE DESIRED SKVA. THE DIP (IN PERCENT) AT THE DESIRED SKVA IS:
DIP = DIP1 + (SKVA - SKVA1) * 2.5 /
(SKVA2 - SKVA1)
NOTE:VOLTAGE DIPS GREATER THAN 35% MAY CAUSE MAGNETIC CONTACTORS TO DROP OUT.

2. REDUCED VOLTAGE STARTING:
REFER TO THE FOLLOWING TABLE. MULTIPLY THE CALCULATE ACROSS LINE SKVA BY THE MULTIPLIER LISTED FOR THE SPECIFIC STARTING METHOD. APPLY THE RESULT TO THE STARTING TABLE AS IN II A, TO CALCULATE THE EXPECTED VOLTAGE DIP:

TYPE OF REDUCED VOLTAGE STARTING	MULTIPLY LINE SKVA BY
80% TAP	.80
65% TAP	.65
50% TAP	.50
45% TAP	.45
Wye start,delta run	.33

AUTOTRANSFORMER

80% TAP .68
65% TAP .46
50% TAP .29

NOTE: REDUCE VOLTAGE STARTING LOWERS THE MAXIMUM REQUIRED MOTOR skVA.

3. Part winding starting:
Most common is half-winding start, full-winding run. Multiply the full motor, accross line starting skVA by 0.6. Apply the result to the selected curve as in ii. A above. Read the expected voltage dip, for the required skVA.

III.DEFINITION:

A. GENERATOR TERMS

MODEL: Engine Sales model
ENG TYPE: DI = Direct Injection,
NA = Naturally aspirated, etc
HZ: Running frequency, hertz
RATING TYPE: PP, SB (prime power or standby)
KW: Base rating electrical kilowatts (ekW)
VOLTS: Rating terminal, line to line
GEN ARR: Cat generator arrangement part number
GEN FRAME: Generator frame size designation
CONN: Generator output connection
(star, wye, delta, ect.)
POLES: Number of pole pieces on rotor.
(eg. A 4 pole generator run at 1800)
RPM will produce 60 Hz alternating current. A 6 pole generator run at 1200 RPM will produce 60 Hz alternating current.)

B. GENERATOR TEMPERATURE RISE:

The indicated temperature rise indicated the NEMA limits for standby or prime power applications. These rises are used for calculating the losses and efficiencies and are not necessarily indicative of the actual temperature rise of a given machine.

C. CENTER OF GRAVITY

The specified center of gravity is for the generator only.
For single bearing, and two bearing close coupled generators, the cent er of gravity is measured from the generator/engine flywheel housing i nterface and from the centerline of the rotor shaft.

For two bearing, standalone generators, the center of gravity is measu red from the end of the rotor shaft and from the centerline of the rot or shaft.

For two bearing, standalone generators, the center of gravity is measu red from the end of the rotor shaft and from the centerline of the rot or shaft.

D. GENERATOR DECREMENT CURRENT CURVES

The generator decrement current curve gives the symmetrical current supplied by the generator for a three phase bolted fault at the generator terminals. Generators equipped with the series boost attachment or generators with PM excitation system will supply 300% of rated current for at least 10 seconds.

E. GENERATOR EFFICIENCY CURVES

The efficiency curve is representative of the overall generator efficiency over the normal range of the electrical load and at the specified parameters. This is not the overall engine generator set efficiency curve.

Generator drawings are not exact due to the custom order

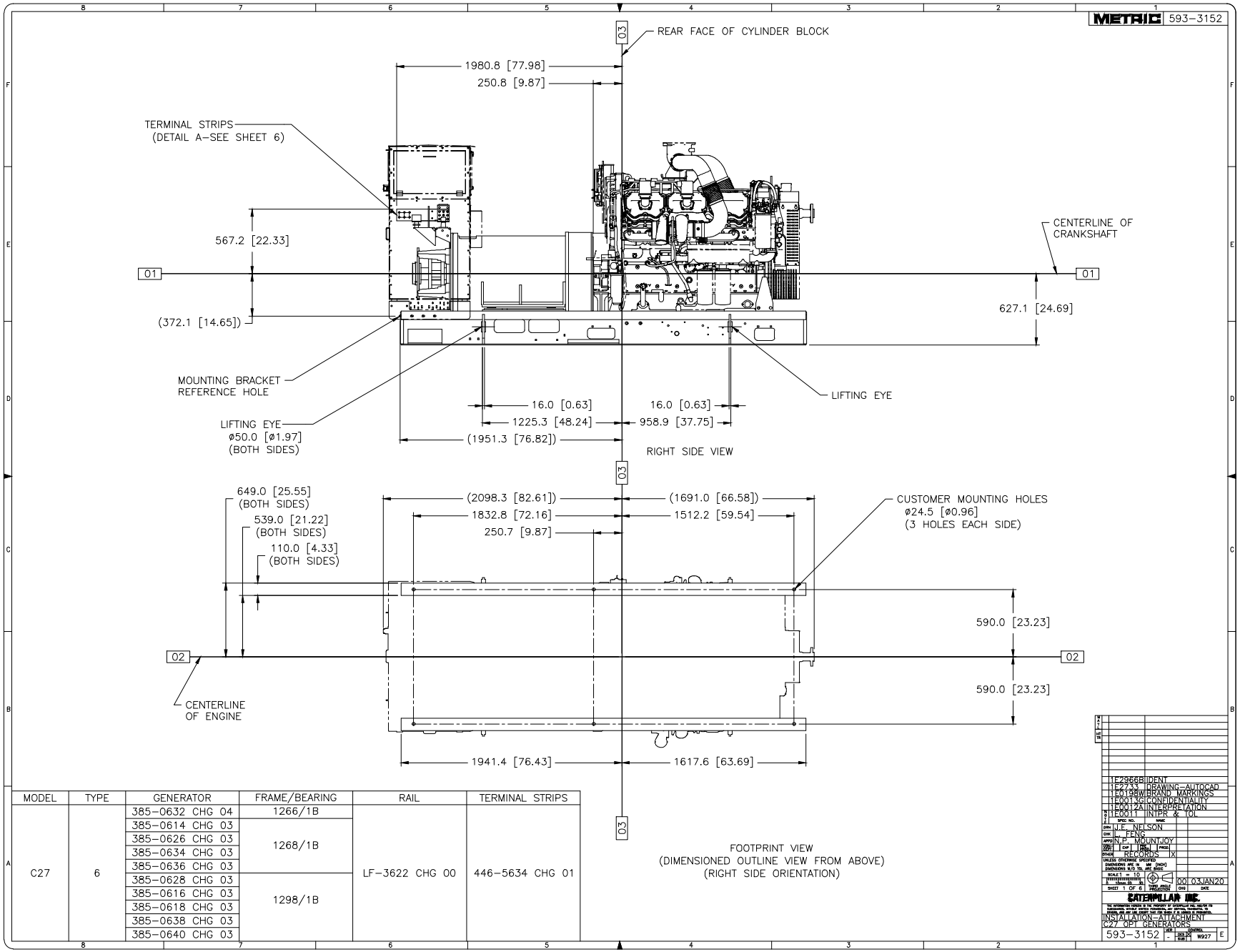

MODEL	TYPE	GENERATOR	FRAME/BEARING	RAIL	TERMINAL STRIPS
C27	6	385-0632 CHG 04	1266/1B	LF-3622 CHG 00	446-5634 CHG 01
		385-0614 CHG 03	1268/1B		
		385-0626 CHG 03			
		385-0634 CHG 03			
		385-0636 CHG 03			
		385-0628 CHG 03	1298/1B		
		385-0616 CHG 03			
		385-0618 CHG 03			
		385-0638 CHG 03			
		385-0640 CHG 03			

Generator drawings are not exact due to the custom order

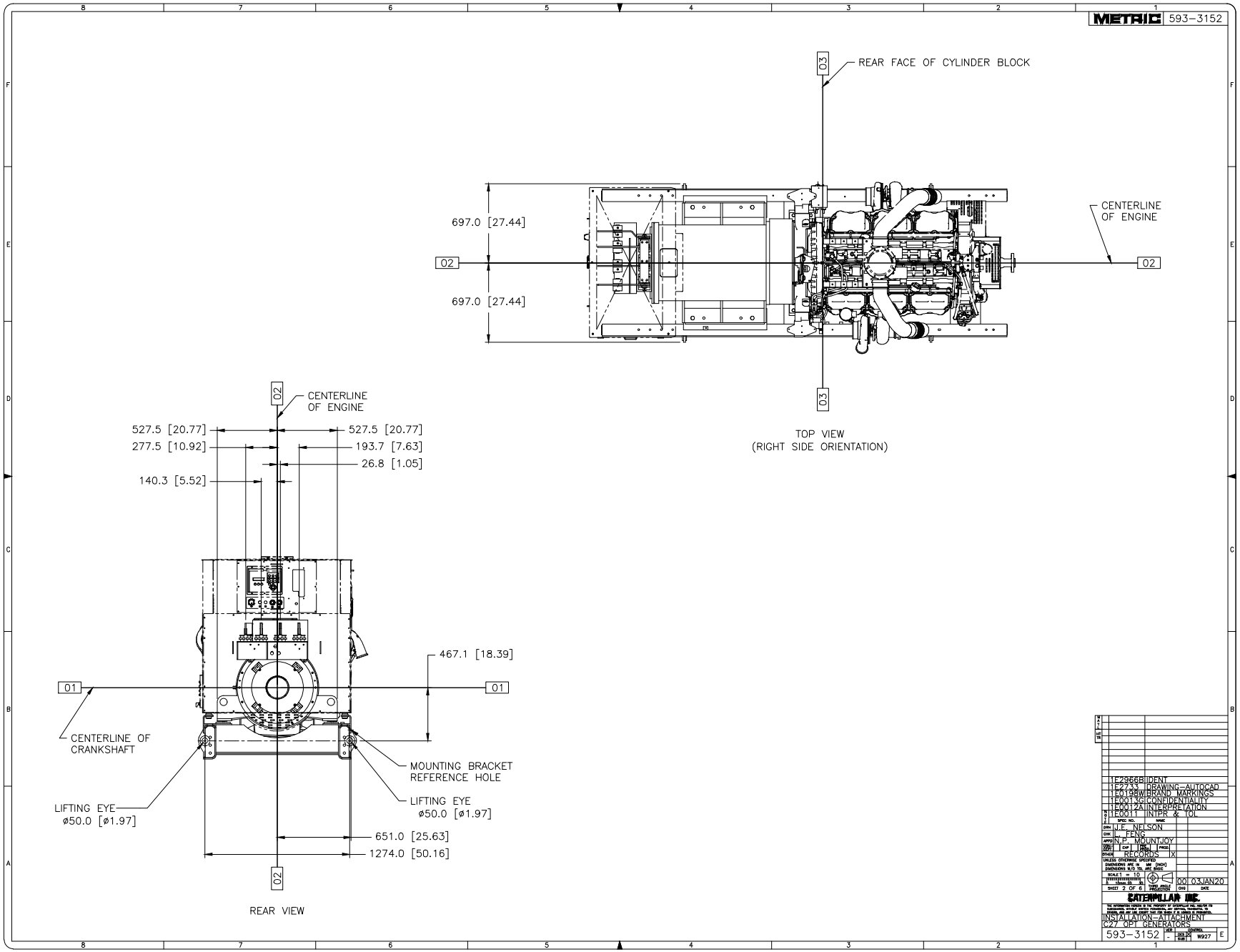

Generator drawings are not exact due to the custom order

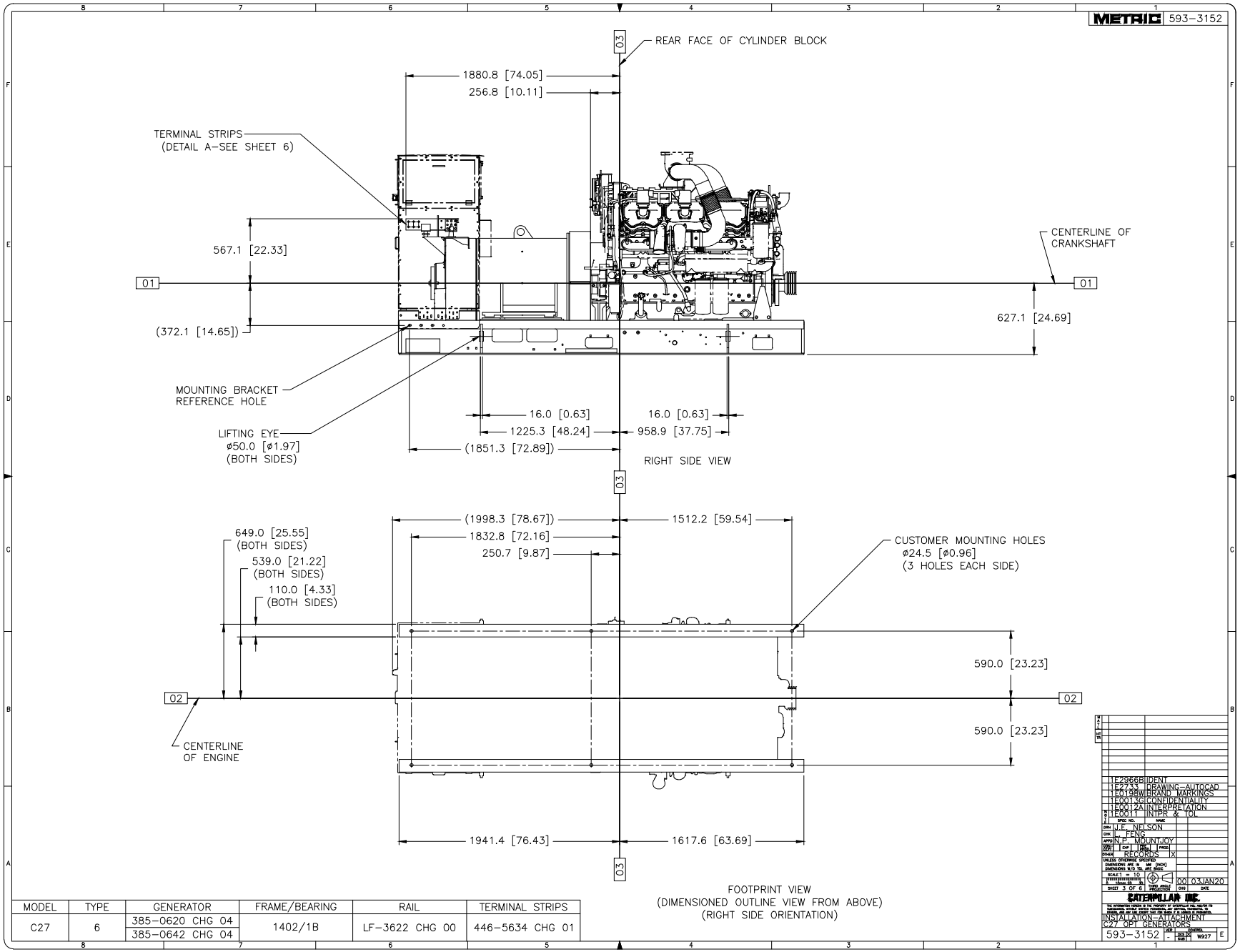

MODEL	TYPE	GENERATOR	FRAME/BEARING	RAIL	TERMINAL STRIPS
C27	6	385–0620 CHG 04 385–0642 CHG 04	1402/1B	LF–3622 CHG 00	446–5634 CHG 01

Generator drawings are not exact due to the custom order

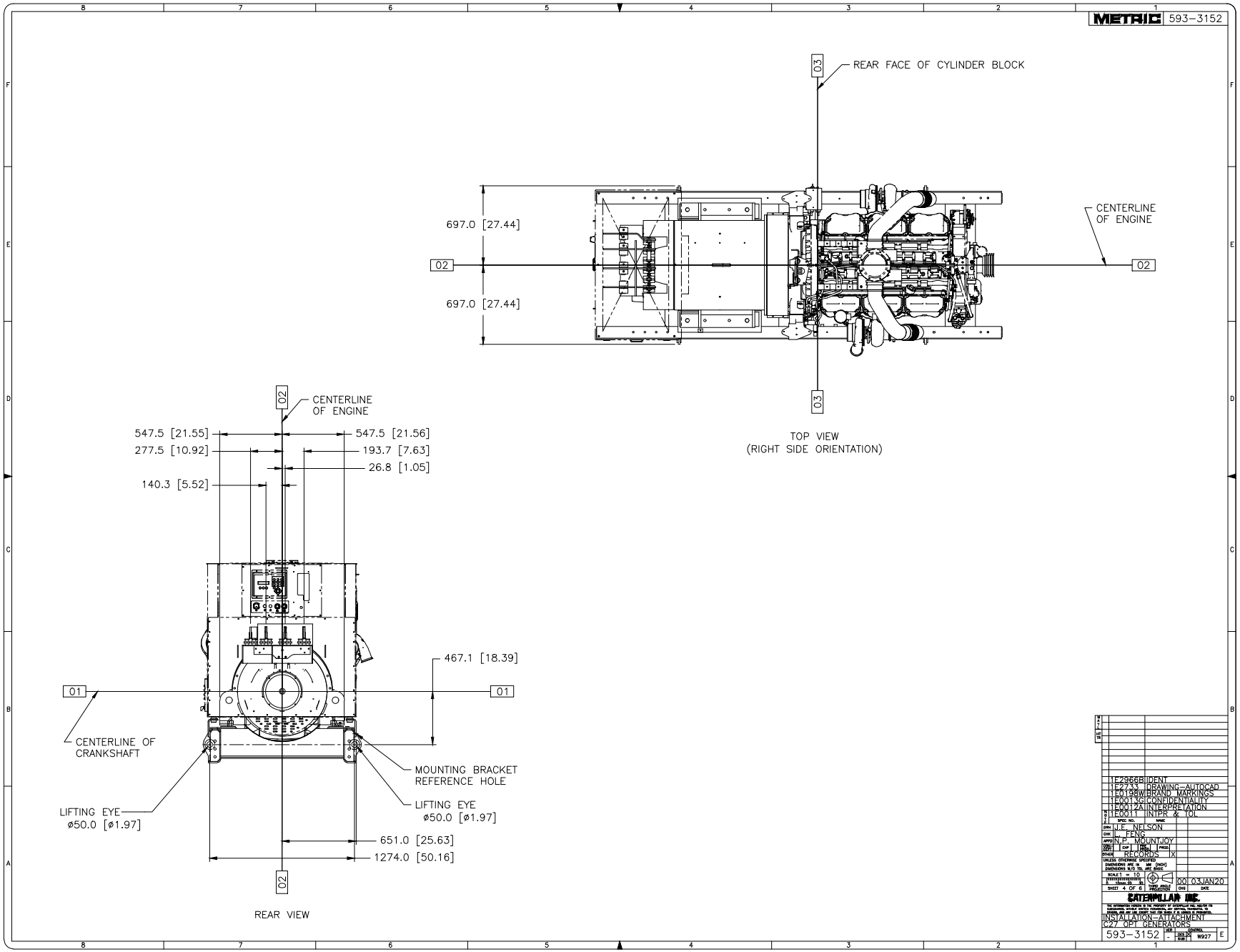

Generator drawings are not exact due to the custom order

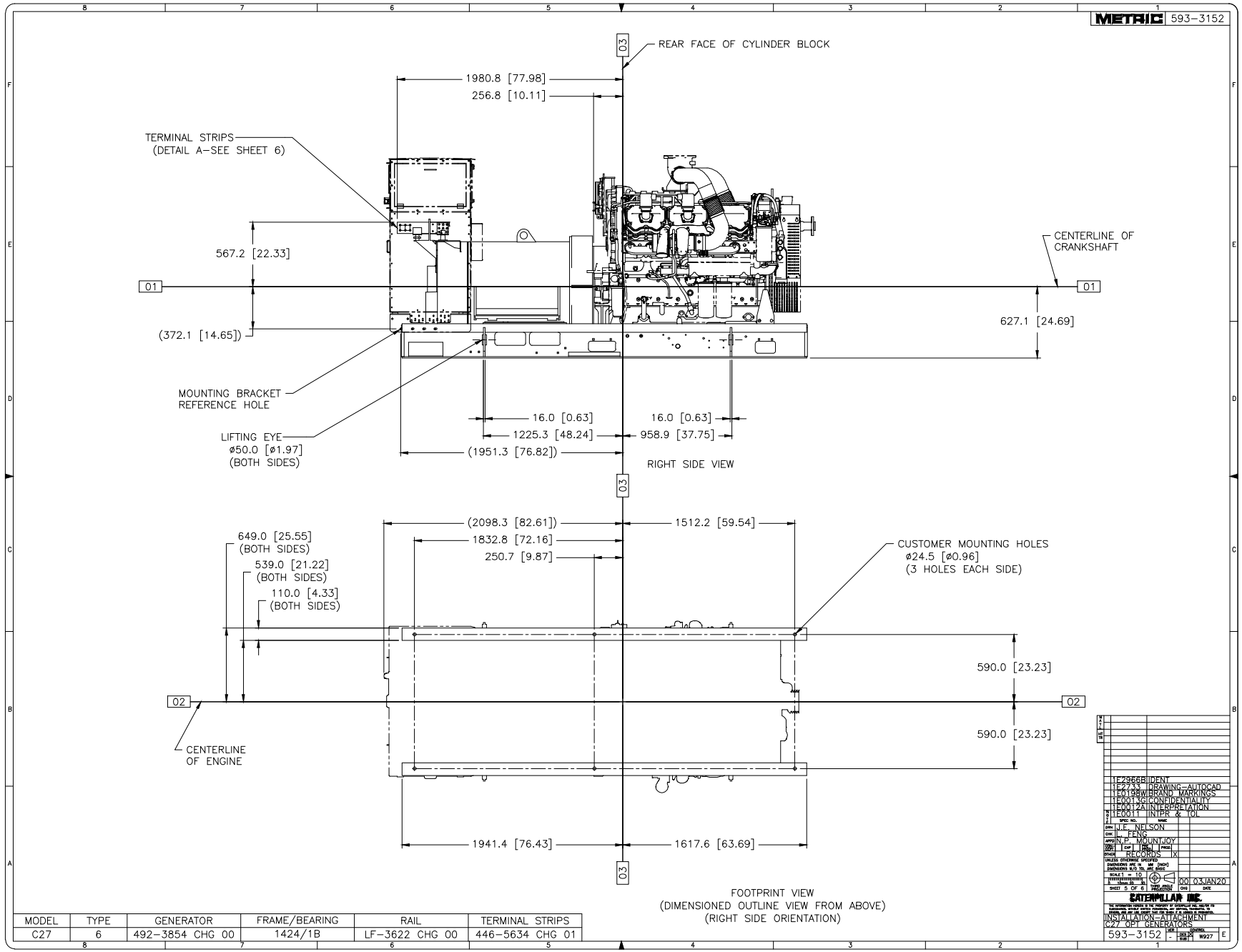

Generator drawings are not exact due to the custom order

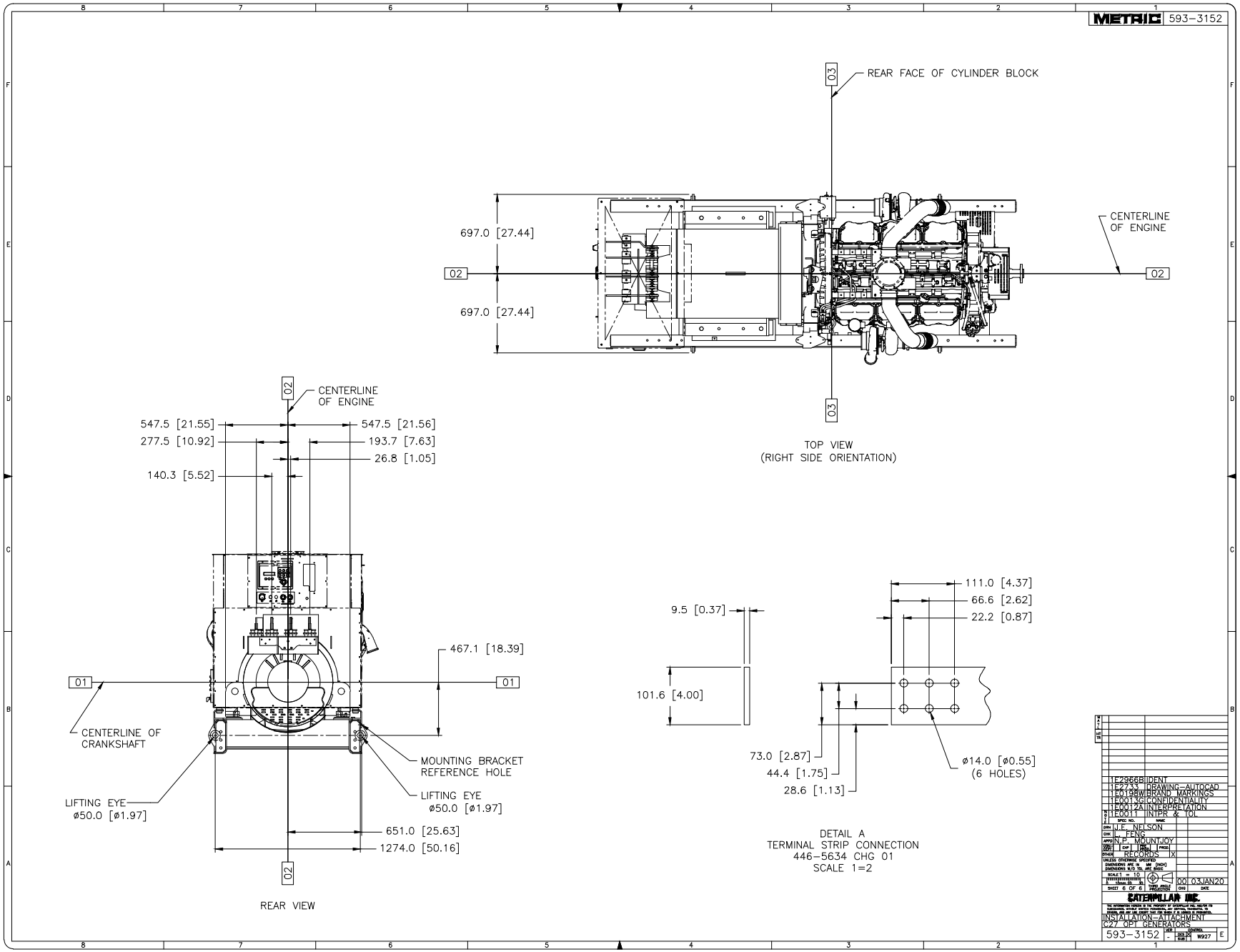

Engine Information

Engine Manufacturer	CAT	Exhaust Flow	5612 acfm (cfm)
Engine Model	C27	Exhaust Temperature	948 F
Engine Speed	1800 rpm	Number of Engines	1
Engine Allowable Back Pressure	27 inH_2O	Number of Exhaust Outlets	1
Design Back Pressure	11 inH_2O		

Sound Data

		Octave Band Center Frequency (OBCF)											Receiver	
	Hz	31.5	63	125	250	500	1k	2k	4k	8k	Overall (dBA)		Angle	Distance
Sound Performance Estimations (DKHBA2B-10PF-2-0000C7K0)														
Estimated Attenuation	dB	15.0	26.0	35.0	40.0	44.0	45.0	46.0	46.0	43.0	-		–	–

Computed noise levels at each distance and frequency is based on a *free field condition.*
Site conditions have *not* been taken into account in acoustic predictions.
The ambient sound level must be at least 10 dBA below the requested sound target.
MIRATECH does not warrant Sound Performance Estimations
Warranted sound level is of the primary silencer only.
For all distance noise propagation, free field dispersion rule of 6 dB is used every time distance is doubled.

System Pressure Data

Component	Description	Flow	Flow Rate	Outlet Flow Velocity	Pressure Drop
Exhaust					
FL10X-08CA1-10TF2-180-2	Custom Flex Assembly, 8" Caterpillar Flange Inlet, 10" Tube Flange Outlet, 18" Overall Length, 10" Diameter, Carbon Steel	Full Flow	5612.0 acfm	177.3 ft/s	1.1 inH_2O
DKHBA2B-10PF-2-0000C7K0	DKH-Series, Hospital Grade, Carbon Steel Disk Silencer, 10" Pipe Flange Bottom Inlet, 10" Pipe Flange Side (12:00) Outlet, Bottom Lugs	Full Flow	5612.0 acfm	157.9 ft/s	7.3 inH_2O
Total Pressure Drop					**8.4 inH_2O**

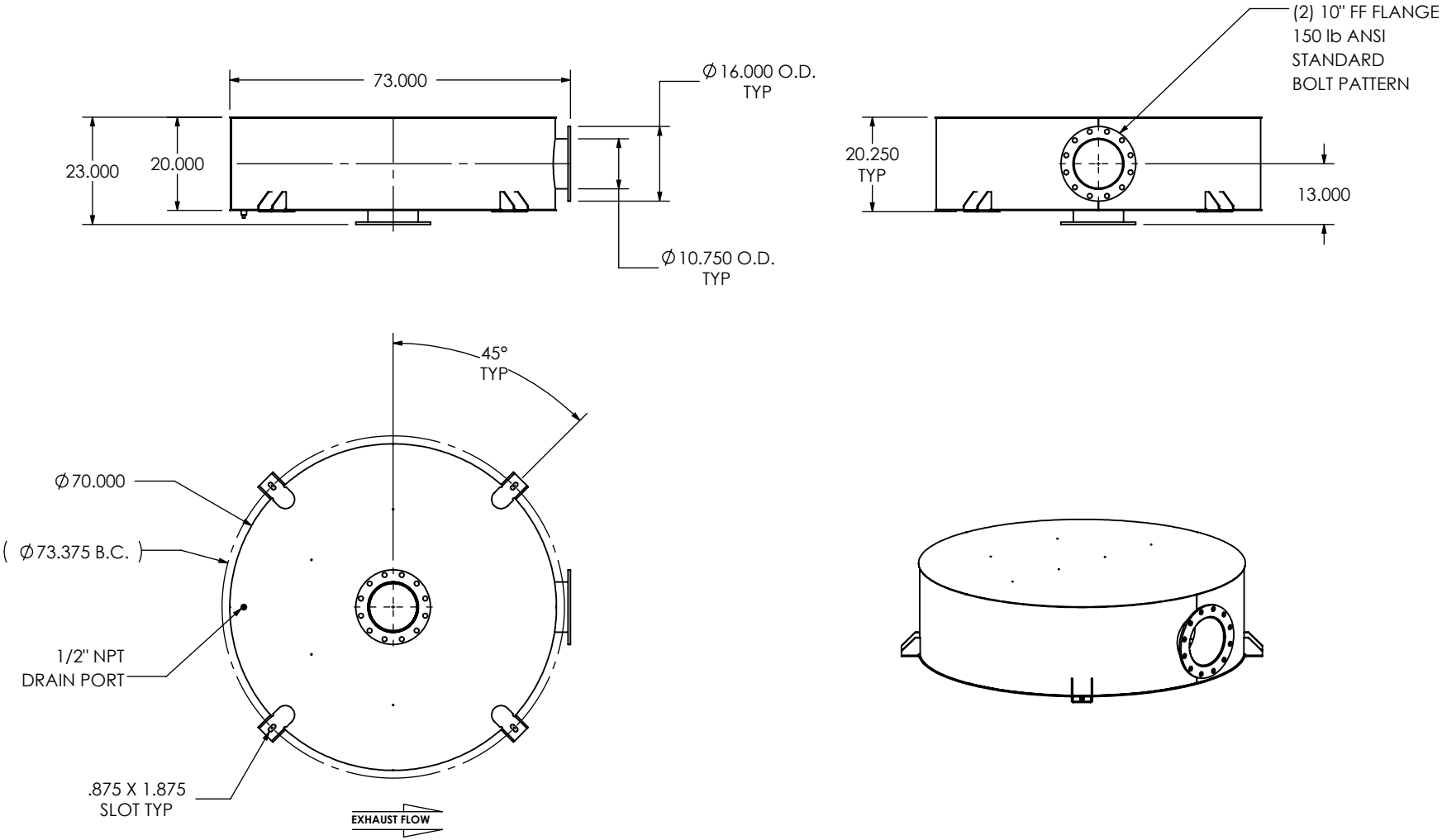

NOTES:

- DO NOT USE EQUIPMENT TO SUPPORT OTHER PARTS OF THE EXHAUST SYSTEM WITHOUT PROPER REINFORCEMENT

MATERIAL CONSTRUCTION:

- CARBON STEEL

PAINT:

- HIGH TEMPERATURE BLACK (MIRATECH COATING SYSTEM 5)

PROJECT NAME	**PROPRIETARY AND CONFIDENTIAL** THE INFORMATION CONTAINED IN THIS DRAWING IS THE SOLE PROPERTY OF MIRATECH GROUP, LLC. ANY REPRODUCTION IN PART OR AS A WHOLE WITHOUT THE WRITTEN PERMISSION OF MIRATECH GROUP, LLC IS PROHIBITED.	DIMENSIONS ARE IN INCHES UNLESS OTHERWISE SPECIFIED DIMENSIONAL TOLERANCES UNLESS OTHERWISE SPECIFIED ANGLES MACH: ±1° BEND: ±3° INCHES: ±0.125 MILLIMETERS: ±2	MIRATECH / em PRODUCTS
PROPOSAL NUMBER		DO NOT SCALE DRAWING	**DKHBA2B-10PF-2-0000C7K0** **Sales Drawing**
SALES ORDER NO.		DRAWN FES / DATE 10/14/2016	DRAWING DKHBA2B-10PF-2-0000C7K0 SD / REV 0
CUSTOMER P.O.		REVIEWED BY AJM / DATE 10/21/2016	SIZE A / SCALE 1:34 / WEIGHT: 871 lb / SHEET 1 OF 1

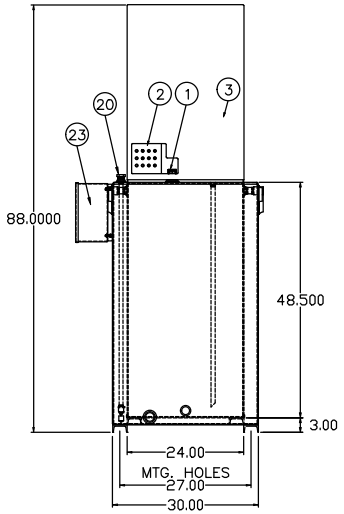

FRONT VIEW

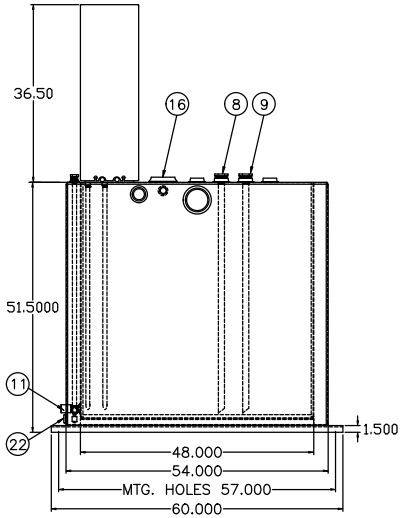

RIGHT SIDE VIEW

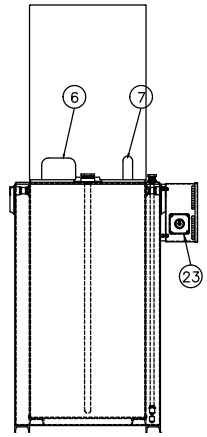

REAR VIEW

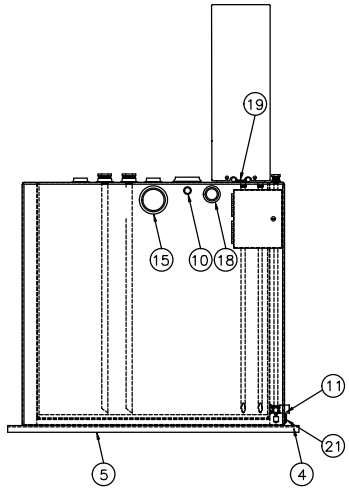

LEFT SIDE VIEW

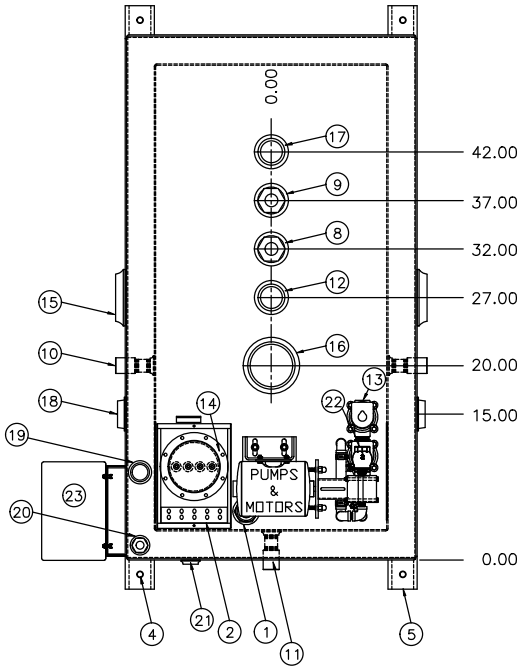

TOP VIEW
(SCALE: 2X)

	DESCRIPTION OF FITTINGS
1	1 1/2" NPT FOR FUEL LEVEL GAUGE
2	U/L LISTED INDUSTRIAL CONTROL PANEL
3	REMOVABLE COVER
4	1/2" MOUNTING HOLE TO FLOOR
5	C3 x 4.1# STRUCTURAL CHANNEL LEG
6	FUEL INLET THRU COVER
7	ELECTRICAL INLET THRU COVER
8	2" x 1" NPT ENGINE FUEL SUPPLY W/PIPE STEM
9	2" x 1" NPT ENGINE FUEL RETURN W/PIPE STEM
10	1" NPT OVERFLOW TO MAIN STORAGE TANK
11	1" NPT FOR TANK DRAIN (PLUGGED)
12	2" NPT VENT FOR TANK TO ATMOSPHERE
13	1" NPT FUEL INLET TO SOLENIOD VALVES & TANK
14	INSPECTION PLATE
15	4" NPT U/L EMERGENCY RELIEF VENT FOR DOUBLE WALL
16	4" NPT U/L EMERGENCY RELIEF VENT FOR TANK
17	2" NPT EXTRA CONNECTION
18	2" NPT VENT FOR DOUBLE WALL TO ATMOSPHERE
19	1 1/4" NPT DOUBLE WALL INSPECTION FITTING
20	1" x 1/2" NPT FOR LEAK DETECTOR SWITCH
21	1" NPT FOR DOUBLE WALL DRAIN (PLUGGED)
22	1" NPT FUEL OUTLET FROM CHECK VALVE PUMP
23	CONTROL ENCLOSURE W/ ALARM HORN

CONSTRUCTION NOTES

TANK IS CONSTRUCTED OF 12 GAUGE STEEL

PY200 DOUBLE WALL U/L LISTED DAY TANK
W/ 213B,223,355B,360B,399,427A,544

PRYCO INC.
MECHANICSBURG ILLINOIS

DRAWN BY: APP	SEE DRAWING: NONE
CHECKED BY: DJW	SCALE: 1 = 35
DATE: 4-12-22	DWG. NUMBER: P0200d452

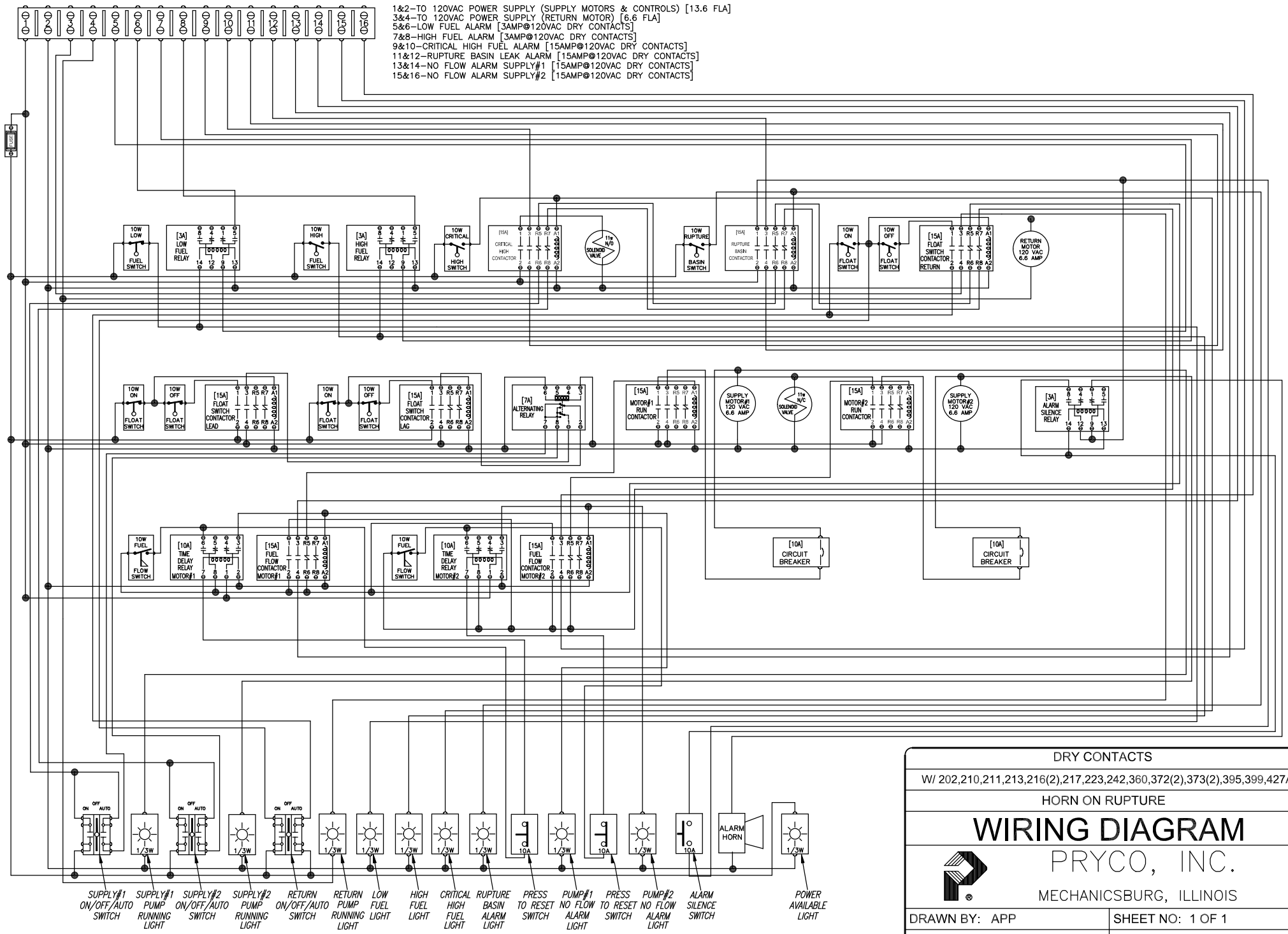

DRY CONTACTS

W/ 202,210,211,213,216(2),217,223,242,360,372(2),373(2),395,399,427A

HORN ON RUPTURE

WIRING DIAGRAM

PRYCO, INC.

MECHANICSBURG, ILLINOIS

DRAWN BY: APP	SHEET NO: 1 OF 1
CHECKED BY: DJW	SEE: NONE
DATE: 4-12-22	DWG NO: WD18571

Picture shown may not reflect actual configuration

Linear Spring-Type Vibration Isolators

GENERAL DESCRIPTION

The most effective isolators for low frequency vibration are of steel spring design. They can isolate up to 95 percent of all vibration and noise transmitted from rotating machinery to the foundation or mounting surface. Conversely, isolators can absorb disturbances generated by adjacent machinery and prevent damage from being transmitted to idle equipment.

Spring-type linear vibration isolators are available as attachments for generator sets to be used in stationary applications. These isolators permit mounting the generator set on a surface capable of supporting only the static load.

The spring-type isolator is constructed of a telescoping welded steel housing containing color coded springs. Each isolator is packaged with three (3) or four (4) spring inserts. The springs are freestanding stable springs and are designed for **19 mm (0.75-inch)** deflection at rated load. The spring wires meet/comply with: SAE 1065, ASTM A229-56, MIL QQ-W-428 Type 1.

Each isolator is furnished with spring adjusting bolts, resilient neoprene alignment inserts and non-skid neoprene acoustical pad cemented to the base plate.

Isolator Data

Part Number	Color Code (Springs)	Rated Capacity kg (lb) *	Spring Rate kg/cm (lb/in)*	Solid Load kg (lb)*
153-3864	3 x Gold	2039 (4495)	1074 (6000)	3058 (6742)
153-3865	1 x Blue & 2 x Gold	1700 (3748)	895 (5000)	2550 (5622)
178-5048	4 x Gold	2722 (6001)	1428 (7995)	4083 (9001)

* value per isolator

Weights and Dimensions

Isolator	Weight	Length (L)	Height (H1)	Height (with leveling bolt) (H2)	Width (W)
153-3864	8.2 kg (15 lb)	381 mm (18.0")	134 mm (5.3”)	197 mm (8.9”)	76 mm (3.0")
153-3865					
178-5048	12.5 kg (27.6 lb)	457 mm (18.0")	133 mm (5.3”)	206 mm (8.1")	76.2 mm (3.0")

Isolator Drawing

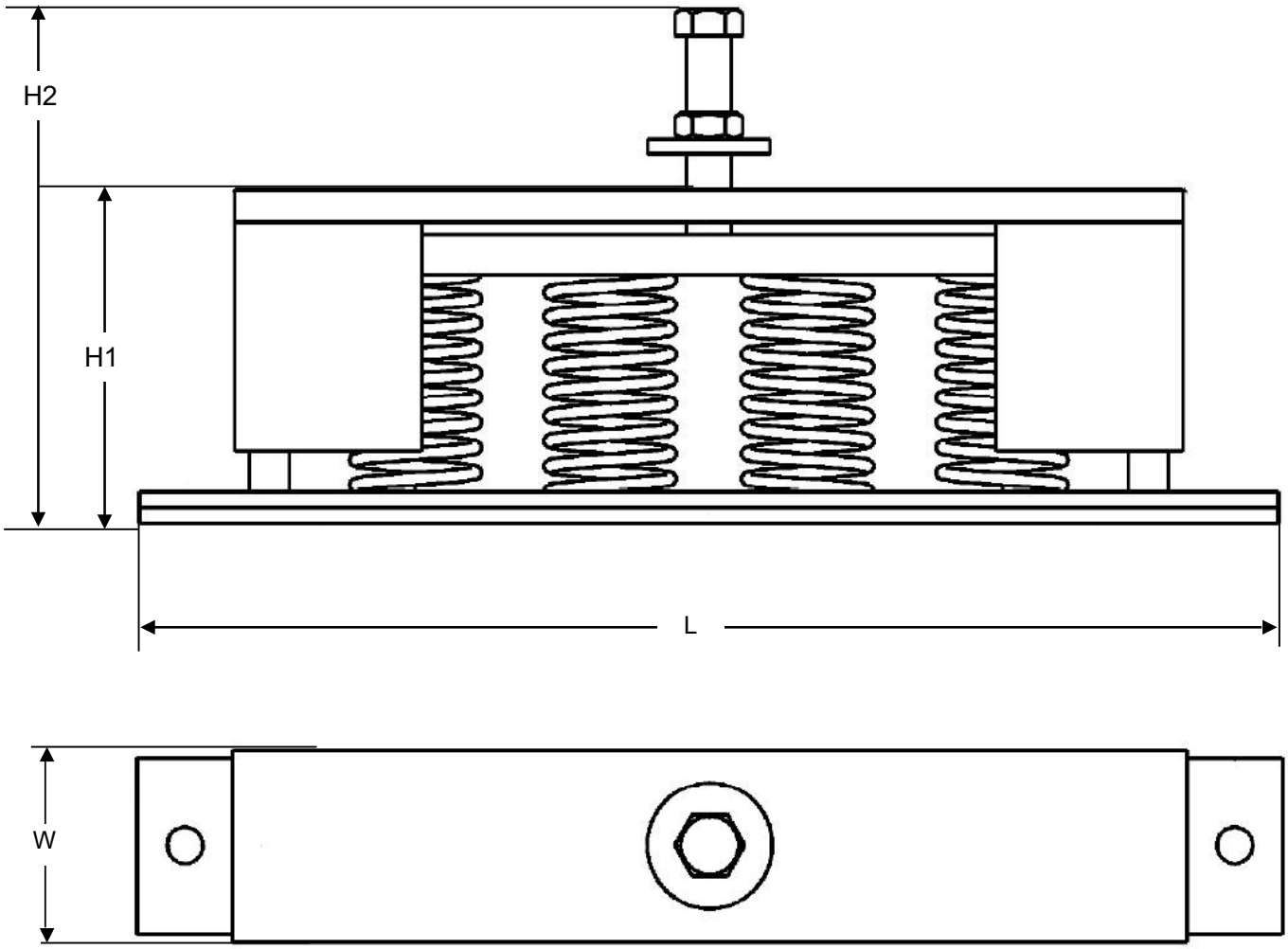

Materials and specifications are subject to change without notice.
CAT, CATERPILLAR, LET'S DO THE WORK, their respective logos, "Caterpillar Corporate Yellow", the "Power Edge" and Cat "Modern Hex" trade dress as well as corporate and product identity used herein, are trademarks of Caterpillar and may not be used without permission.

©2020 Caterpillar
All rights reserved.

ENGINE MONITORING SYSTEM

Pi cture shown may not reflect actual configuration

EMCP 4.2B GENERATOR SET CONTROLLER

The Cat® EMCP 4.2B offers fully featured power metering, protective relaying and engine and generator control and monitoring. Engine and generator controls, diagnostics, and operating information are accessible via the control panel keypads; diagnostics from the EMCP 4 optional modules can be viewed and reset through the EMCP 4.2B.

Full range of attachments

- Wide range of system expansion attachments, designed specifically to work with the EMCP 4
- Flexible packaging options for easy and cost effective installation

World wide product support

- Cat dealers provide extensive pre and post sale support
- Cat dealers have over 1,600 dealer branch stores operating in 200 countries

Features

- A 33 x 132 pixel, 3.8 inch, white backlit graphical display denotes text alarm/event descriptions, set points, engine and generator monitoring, and is visible in all lighting conditions.
- Textual display with support for 26 languages
- Advanced engine monitoring is available on systems with an ADEM™ controller.
- Integration with the CDVR and IVR provides enhanced system performance
- Fully featured power metering, protective relaying, engine and generator parameter viewing, and expanded AC metering are all integrated into this controller.
- Real-time clock allows for date and time stamping of diagnostics and events in the control's logs as well as service maintenance reminders based on engine operating hours or calendar days. Up to 40 diagnostic events are stored in the non-volatile memory

Features

- Ability to view and reset diagnostics on EMCP 4 optional modules via the control panel removes the need for a separate service tool for troubleshooting
- Set points and software stored in non-volatile memory, preventing loss during a power outage
- Five levels of security allow for configurable operator privileges
- Programmable security levels for groups of setpoints.
- Programmable kW Relays (3)
- Programmable weekly exerciser timer
- Dealer configurable resistive maps
- Default overview screen
- Real (kW) Load histogram
- Auto mains failure
- Programmable logic functionality
- Selectable units
    - Temperature: °C or °F
    - Pressure: psi, kPa, bar
    - Fuel Consumption: Liter/hr or Gal/hr (U.S. or U.K.)

Standard Features

- Voltage (L-L, L-N)
- Current (Phase)
- Average Volt, Amp, Frequency
- kW, kVAr, kVA (Average, Phase, %)
- Power Factor (Average, Phase)
- kW-hr, kVAr-hr (total)
- Excitation voltage and current (with CDVR)
- Desired Voltage, Excitation Command, Operating Mode (with IVR)
- Generator stator and bearing temp (with optional module)
- kW load histogram

Generator Protection

- Generator phase sequence
- Over/Under voltage (27/59)
- Over/Under frequency (81 O/U)
- Reverse Power (kW) (32)
- Reverse Reactive Power (kVAr) (32RV)
- Overcurrent (50/51)
- Thermal Damage Curve

Engine Monitoring

- Coolant temperature
- Oil pressure
- Engine speed (RPM)
- Battery voltage
- Run hours
- Crank attempt and successful start counter
- Enhanced engine monitoring (with electronic engines)

Engine Protection

- Control switch not in auto (alarm)
- High coolant temp (alarm and shutdown)
- Low coolant temp (alarm)
- Low coolant level (alarm)
- High engine oil temp (alarm and shutdown)
- Low, high, and weak battery voltage
- Overspeed
- Overcrank
- Low Oil Pressure

Control

- Run / Auto / Stop control
- Speed and voltage adjust
- Local and remote emergency stop
- Remote start/stop
- Cycle crank

Inputs & Outputs

- Two dedicated digital inputs
- Three analog inputs
- Six programmable digital inputs
- Eight relay out
- Two programmable digital outputs

Communications

- Primary and accessory CAN data links
- RS-485 annunciator data link
- Modbus RTU (RS-485 Half duplex)

Language Support

Arabic, Bulgarian, Czech, Chinese, Danish, Dutch, English, Estonian, Finnish, French, German, Greek, Hungarian, Italian, Icelandic, Japanese, Latvian, Lithuanian, Norwegian, Polish, Portuguese, Romanian, Russian, Spanish, Swedish, Turkish

Environmental

- Control module operating temperature: -40°C to 70°C
- Display operating temperature: -20°C to 70°C
- Humidity: 100% condensing 30°C to 60°C
- Storage temperature: -40°C to 85°C
- Vibration: Random profile, 24-1000 Hz, 4.3G rms

Standards

- UL Recognized
- CSA C22.2 No.100,14, 94
- Complies with all necessary standards for CE Certification
    - 98/37/EC Machinery Directive
    - BS EN 60204-1 Safety of Machinery 89/336/EEC EMC Directive
    - BS EN 50081-1 Emissions Standard
    - BS EN 50082-2 Immunity Standard 73/23/EEC Low Voltage Directive
    - EN 50178 LVD Standard
- IEC529, IEC60034-5, IEC61131-3
- MIL STND 461

Optional Modules

CAN annunciator

The EMCP 4 CAN Annunciator serves to display generator set system alarm conditions and status indications.
The annunciator has been designed for use on the accessory communication network and may be used in either local (package mounted) or remote (up to 800 feet) application. A maximum of four annunciators may be used with a single EMCP.

RS-485 annunciator

The EMCP 4 RS-485 Annunciator serves to display generator set system alarm conditions and status indications. The annunciator has been designed for use on the long distance annunciator datalink and is used for remote (up to 4000 feet) application.

The remote monitoring software allows the user to configure data monitoring and data acquisition processes for monitoring, graphing, and logging of generator set data.

Remote monitoring software

The EMCP remote monitoring software package is a PC based program which allows the user to monitor and control a generator set, and is capable of running on a Windows based operating system. The remote monitoring software allows the user to configure data monitoring and data acquisition processes for monitoring, graphing, and logging of generator set data.

Programmable logic software

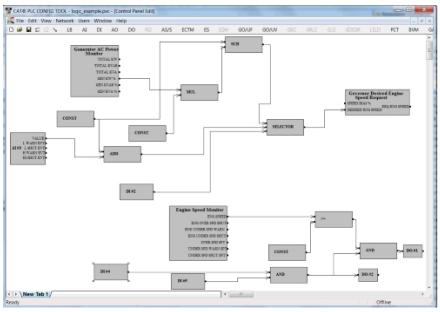

The EMCP programmable logic software package is a PC based program which allows the configuration of the programmable logic blocks, and is capable of running on a Windows based operating system. The programmable logic software allows the user to configure logic to change the operation of the EMCP control and interfaces within a limited scope.

Optional Modules (Continued)

Digital input/output module

The Digital Input/Output (DI/O) module serves to provide expandable Input and Output event capability of the EMCP 4 and is capable of reading 12 digital inputs and setting 8 relay outputs.
The DI/O module has been designed for use on the accessory Communication Network and may be used in either local (package mounted) or remote (up to 800 feet) application.

Materials and specifications are subject to change without notice.
CAT, CATERPILLAR, their respective logos, “Caterpillar Yellow,” the “Power Edge” trade dress as well as corporate and product identity used herein, are trademarks of Caterpillar and may not be used without permission.

©2018 Caterpillar
All rights reserved.

WIRING DIAGRAM

SHEET	DESCRIPTION
1	SHEET INDEX 1
2	SHEET INDEX 2
3	SHEET INDEX 3
4	NOTES
5	NOTES
6	ABBREVIATIONS & SYMBOLS
7	COMPONENT LAYOUT – SHEET 1 OF 11 (MODULAR CONTROL PANEL/VR SUBPAN)
8	COMPONENT LAYOUT – SHEET 2 OF 11 (MODULAR CONTROL PANEL)
9	COMPONENT LAYOUT – SHEET 3 OF 11 (MODULAR CONTROL PANEL)
10	COMPONENT LAYOUT – SHEET 4 OF 11 (2700/941 FRAME GENERATORS)
11	COMPONENT LAYOUT – SHEET 5 OF 11 (3000 FRAME GENERATORS)
12	COMPONENT LAYOUT – SHEET 6 OF 11 (B5600H4 GENERATORS)
13	COMPONENT LAYOUT – SHEET 7 OF 11 (Y5000 GENERATORS)
14	COMPONENT LAYOUT – SHEET 8 OF 11 (RECESSED MODULAR CONTROL PANEL/EMCP 4.2B)
15	COMPONENT LAYOUT – SHEET 9 OF 11 (RECESSED MODULAR CONTROL PANEL/EMCP 4.3)
16	COMPONENT LAYOUT – SHEET 10 OF 11 (GAS MODULAR CONTROL PANEL)
17	COMPONENT LAYOUT – SHEET 11 OF 11 (GDI CONTROL PANEL)
18	CUSTOMER INTERCONNECTS SHEET 1 OF 11 (EMCP 4.2B, 4.3, 4.4)
19	CUSTOMER INTERCONNECTS SHEET 2 OF 11 (EMCP 4.2B)
20	CUSTOMER INTERCONNECTS SHEET 3 OF 11 (EMCP 4.2B, 4.3, 4.4)
21	CUSTOMER INTERCONNECTS SHEET 4 OF 11 (LOW VOLTAGE TO WALL MOUNT)
22	CUSTOMER INTERCONNECTS SHEET 5 OF 11 (2700/3000 FRAME TO WALL MOUNT)
23	CUSTOMER INTERCONNECTS SHEET 6 OF 11 (B5600H4/Y5000 TO WALL MOUNT)
24	BLANK
25	BLANK
26	CUSTOMER INTERCONNECTS SHEET 7 OF 11 (EMCP 4.3/4.4)
27	CUSTOMER INTERCONNECTS SHEET 8 OF 11 (HARDWIRED DBA & LSLD)
28	CUSTOMER INTERCONNECTS SHEET 9 OF 11 (GAS MODULAR CONTROL PANEL)
29	CUSTOMER INTERCONNECTS SHEET 10 OF 11 (GAS MODULAR CONTROL PANEL)
30	CUSTOMER INTERCONNECTS SHEET 11 OF 11 (1G1U)
31	AC SCHEMATIC – SHEET 1 OF 12 (LOW VOLTAGE 1200/1400/1600/1800 FRAMES)
32	AC SCHEMATIC – SHEET 2 OF 12 (LOW VOLTAGE CDVR OPTION)
33	AC SCHEMATIC – SHEET 3 OF 12 (MED VOLTAGE (3300–4160V) IVR OPTION)
34	AC SCHEMATIC – SHEET 4 OF 12 (MED VOLTAGE (3300–4160V) CDVR OPTION)
35	AC SCHEMATIC – SHEET 5 OF 12 (SWITCHGEAR TYPE PT AND DCT OPTION)
36	AC SCHEMATIC – SHEET 6 OF 12 (2400V 1400/1600/1800 FRAMES)
37	AC SCHEMATIC – SHEET 7 OF 12 (2700 FRAME GENERATORS)
38	AC SCHEMATIC – SHEET 8 OF 12 (3000 FRAME GENERATORS)
39	AC SCHEMATIC – SHEET 9 OF 12 (B5600H4 GENERATORS)
40	AC SCHEMATIC – SHEET 10 OF 12 (Y5000 GENERATORS)
41	AC SCHEMATIC – SHEET 11 OF 12 (LOW VOLTAGE GDI OPTION)
42	AC SCHEMATIC – SHEET 12 OF 12 (HIGH VOLTAGE GDI OPTION)

SHEET	DESCRIPTION
43	DC SCHEMATIC – SHEET 1 OF 18 (EMCP 4.2B)
44	DC SCHEMATIC – SHEET 2 OF 18 (EMCP 4.2B)
45	DC SCHEMATIC – SHEET 3 OF 18 (EMCP 4.2B)
46	DC SCHEMATIC – SHEET 4 OF 18 (EMCP 4.3/4.4)
47	DC SCHEMATIC – SHEET 5 OF 18 (EMCP 4.3/4.4)
48	DC SCHEMATIC – SHEET 6 OF 18 (EMCP 4.3/4.4)
49	DC SCHEMATIC – SHEET 7 OF 18 (CIRCUIT BREAKERS)
50	DC SCHEMATIC – SHEET 8 OF 18 (2700 FRAME GENERATORS)
51	DC SCHEMATIC – SHEET 9 OF 18 (3000 FRAME GENERATORS)
52	DC SCHEMATIC – SHEET 10 OF 18 (B5600H4 GENERATORS)
53	DC SCHEMATIC – SHEET 11 OF 18 (Y5000 GENERATORS)
54	DC SCHEMATIC – SHEET 12 OF 18 (3500 MUI)
55	DC SCHEMATIC – SHEET 13 OF 18 (3500 MUI)
56	DC SCHEMATIC – SHEET 14 OF 18 (3500 MUI)
57	DC SCHEMATIC – SHEET 15 OF 18 (G3500 GAS)
58	DC SCHEMATIC – SHEET 16 OF 18 (G3500 GAS)
59	DC SCHEMATIC – SHEET 17 OF 18 (G3500 GAS)
60	DC SCHEMATIC – SHEET 18 OF 18 (CIRCUIT BREAKER EMAX2)
61	CAT CONNECT
62	COMMUNICATIONS – CAN1
63	COMMUNICATIONS – CAN2
64	AC OPTIONS – SHORE POWER SHEET 1 OF 5 (1200,1200/1400,1600,1800 FRAMES)
65	AC OPTIONS – SHORE POWER SHEET 2 OF 5 (2700 FRAME GENERATORS)
66	AC OPTIONS – SHORE POWER SHEET 3 OF 5 (3000 FRAME GENERATORS)
67	AC OPTIONS – SHORE POWER SHEET 4 OF 5 (B5600H4 GENERATORS)
68	AC OPTIONS – SHORE POWER SHEET 5 OF 5 (Y5000 GENERATORS)
69	SPEED AND VOLTAGE CONTROL
70	3516C/E 50 HZ LOW EMISSIONS (GEARBOX WIRING)
71	MGDL NETWORK – SHEET 1 OF 4
72	MGDL NETWORK – SHEET 2 OF 4
73	MGDL NETWORK – SHEET 3 OF 4
74	MGDL NETWORK – SHEET 4 OF 4
75	12V COMMON ENCLOSURE – AC SCHEMATIC
76	12V COMMON ENCLOSURE – DC SCHEMATIC – SHEET 1 OF 2 (EMCP 4.2B)
77	12V COMMON ENCLOSURE – DC SCHEMATIC – SHEET 2 OF 2 (EMCP 4.3/4.4)
78	12V COMMON ENCLOSURE – CONDUIT – SHEET 1 OF 2
79	12V COMMON ENCLOSURE – CONDUIT – SHEET 2 OF 2
80	ENGINE INTERFACE HARNESS SHEET 1 OF 17 (ON PACKAGE CONTROLS (3500))
81	ENGINE INTERFACE HARNESS SHEET 2 OF 17 (OFF PACKAGE CONTROLS (3500))
82	ENGINE INTERFACE HARNESS SHEET 3 OF 17 (ON PACKAGE CONTROLS (C27/C32))
83	ENGINE INTERFACE HARNESS SHEET 4 OF 17 (OFF PACKAGE CONTROLS (C27/C32))
84	ENGINE INTERFACE HARNESS SHEET 5 OF 17 (ON PACKAGE CONTROLS (3500 MUI))

METRIC 521–9364

SHEET INDEX 1
CATERPILLAR: CONFIDENTIAL GREEN

MATL		
HT TR		
	1E5167A	INT–PROP
	1E2733	DRAWING – AUTOCAD
	1E0198W	BRAND MARKINGS
	1E0013G	CONFIDENTIALITY
	1E0012A	INTERPRETATION
NOTE	1E0011	INTPR & TOL
	SPEC NO.	NAME

DRN ARUN GOPAL
CHK LYLE SEWALL
APPD J.D. ELDER
CON-CEPT | EXP | PRE-PROD. | PROD.
RECORDS ☒

UNLESS OTHERWISE SPECIFIED
DIMENSIONS ARE IN MM [INCHES]
DIMENSIONS W/O TOL ARE BASIC

SCALE: NONE
0 10mm 20 30
SHEET 1 OF 119
THIRD ANGLE PROJECTION

CHG	DATE
01	23AUG19
00	11JUL18

CATERPILLAR INC.

THE INFORMATION HEREON IS THE PROPERTY OF CATERPILLAR INC. AND/OR ITS SUBSIDIARIES. WITHOUT WRITTEN PERMISSION, ANY COPYING, TRANSMITTAL TO OTHERS, AND ANY USE EXCEPT THAT FOR WHICH IT IS LOANED IS PROHIBITED.

DIAGRAM – WIRING
MODULAR CONTROLS

521–9364 | VER – | CONTROL DES ☒ SUB | W944 | D

METRIC 521-9364

SHEET	DESCRIPTION
85	ENGINE INTERFACE HARNESS SHEET 6 OF 17 (OFF PACKAGE CONTROLS (3500 MUI))
86	ENGINE INTERFACE HARNESS SHEET 7 OF 17 (ON PACKAGE CONTROLS (3500 DGB))
87	ENGINE INTERFACE HARNESS SHEET 8 OF 17 (ON PACKAGE CONTROLS (C175-16))
88	ENGINE INTERFACE HARNESS SHEET 9 OF 17 (ON PACKAGE CONTROLS (C175-16 T4I))
89	ENGINE INTERFACE HARNESS SHEET 10 OF 17 (OFF PACKAGE CONTROLS (C175-16))
90	ENGINE INTERFACE HARNESS SHEET 11 OF 17 (ON PACKAGE CONTROLS (GAS-G3500 C/E))
91	ENGINE INTERFACE HARNESS SHEET 12 OF 17 (ON PACKAGE CONTROLS (GAS-G3500 STANDBY))
92	ENGINE INTERFACE HARNESS SHEET 13 OF 17 (ON PACKAGE CONTROLS (GAS-G3500 A))
93	ENGINE INTERFACE HARNESS SHEET 14 OF 17 (ON PACKAGE CONTROLS (GAS-G3500 B))
94	ENGINE INTERFACE HARNESS SHEET 15 OF 17 (ON PACKAGE CONTROLS (GAS-G3500 H GEARBOX))
95	ENGINE INTERFACE HARNESS SHEET 16 OF 17 (OFF PACKAGE CONTROLS (GAS-G3500 H))
96	ENGINE INTERFACE HARNESS SHEET 17 OF 17 (ON PACKAGE CONTROLS (GAS-G3500H))
97	ENGINE INTERFACE HARNESS SHEET (3516/C175 CEM/AFTERTREATMENT CONNECTIONS)
98	ENGINE SCHEMATIC - SHEET 1 OF 4 (C27/C32 ENGINE)
99	ENGINE SCHEMATIC - SHEET 2 OF 4 (C27/C32 ENGINE)
100	ENGINE SCHEMATIC - SHEET 3 OF 4 (C27/C32 ENGINE)
101	ENGINE SCHEMATIC - SHEET 4 OF 4 (C27/C32 ENGINE)
102	ENGINE SCHEMATIC - SHEET 1 OF 2 (3500 EUI ENGINE)
103	ENGINE SCHEMATIC - SHEET 2 OF 2 (3500 EUI ENGINE)
104	ENGINE SCHEMATIC - SHEET 1 OF 2 (3500 MUI ENGINE)
105	ENGINE SCHEMATIC - SHEET 2 OF 2 (3500 MUI ENGINE)
106	ENGINE SCHEMATIC - SHEET 1 OF 5 (3516 DGB ENGINE)
107	ENGINE SCHEMATIC - SHEET 2 OF 5 (3516 DGB ENGINE)
108	ENGINE SCHEMATIC - SHEET 3 OF 5 (3516 DGB ENGINE)
109	ENGINE SCHEMATIC - SHEET 4 OF 5 (3516 DGB ENGINE)
110	ENGINE SCHEMATIC - SHEET 5 OF 5 (3516 DGB ENGINE)
111	ENGINE SCHEMATIC - SHEET 1 OF 3 (C175-16/20 ENGINE)
112	ENGINE SCHEMATIC - SHEET 2 OF 3 (C175-16/20 ENGINE)
113	ENGINE SCHEMATIC - SHEET 3 OF 3 (C175-16/20 ENGINE)
114	ENGINE SCHEMATIC - SHEET 1 OF 5 (G3500 C/E)
115	ENGINE SCHEMATIC - SHEET 2 OF 5 (G3500 STANDBY)
116	ENGINE SCHEMATIC - SHEET 3 OF 5 (G3500 A)
117	ENGINE SCHEMATIC - SHEET 4 OF 5 (G3500 B)
118	ENGINE SCHEMATIC - SHEET 5 OF 5 (G3500 H)
119	ENGINE SCHEMATIC - (GAS-G3500) SERIES

SHEET INDEX 2
CATERPILLAR: CONFIDENTIAL GREEN

MATL		
HT TR		
	1E5167A	INT-PROP
	1E2733	DRAWING - AUTOCAD
	1E0198W	BRAND MARKINGS
	1E0013G	CONFIDENTIALITY
	1E0012A	INTERPRETATION
NOTE	1E0011	INTPR & TOL
	SPEC NO.	NAME

DRN ARUN GOPAL
CHK LYLE SEWALL
APPD J.D. ELDER
CON-CEPT | EXP | PRE PROD. | PROD.
RECORDS ☒

UNLESS OTHERWISE SPECIFIED
DIMENSIONS ARE IN MM [INCHES]
DIMENSIONS W/O TOL ARE BASIC

SCALE: NONE
0 10mm 20 30
SHEET 2 OF 119
THIRD ANGLE PROJECTION

CHG	DATE
01	23AUG19
00	11JUL18

CATERPILLAR INC.

THE INFORMATION HEREON IS THE PROPERTY OF CATERPILLAR INC. AND/OR ITS SUBSIDIARIES, WITHOUT WRITTEN PERMISSION, ANY COPYING, TRANSMITTAL TO OTHERS, AND ANY USE EXCEPT THAT FOR WHICH IT IS LOANED IS PROHIBITED.

DIAGRAM - WIRING
MODULAR CONTROLS

521-9364 | VER - | CONTROL DES ☒ SUB | W944 | D

METRIC 521–9364

ENGINE TYPE	GENERATOR	VOLTAGE	CONTROLLER	SUGGESTED PRINT LIST
C27 / C32	1200/1400 FRAME	LV(<1000V)	EMCP 4.3/4.4	1–7 9 18 20 21 24 26 27 31 46–49 61–64 69 71–74 82 83 98–101
C32	1400 FRAME	MV(1000–5000V)	EMCP 4.3/4.4	1–7 9 18 20 26 27 32 33 46–48 61–64 69 71–74 82 83 98–101
C32	2700 FRAME	HV(>5KV)	EMCP 4.3/4.4	1–7 9 9 18 20 22 26 27 37 46–48 50 61–63 65 69 71–74 83 98–101
3512MUI/3516MUI	1400/1600/1800 FRAME	LV(<1000V)	EMCP 4.3/4.4	1–7 9 18 20 21 24 26 27 32 33 46–49 54–56 61–64 69 71–74 84 85 104 105
3512MUI/3516MUI	1400/1600/1800 FRAME	MV(1000–5000V)	EMCP 4.3/4.4	1–7 9 18 20 26 27 32 33 46–48 54–56 61–64 69 71–74 84 85 104 105
3512MUI/3516MUI	2700 FRAME	HV(>5KV)	EMCP 4.3/4.4	1–7 9 9 18 20 22 26 27 37 46–48 50 54–56 61–63 65 69 71–74 85 104 105
3512EUI/3516EUI	1400/1600/1800	LV(<1000V)	EMCP 4.3/4.4	1–7 9 18 20 21 24 26 27 31 46–49 61–64 69 71–74 80 81 102 103
3512EUI/3516EUI	1400/1600/1800	MV(1000–5000V)	EMCP 4.3/4.4	1–7 9 18 20 26 27 32 33 46–48 61–64 69 71–74 80 81 102 103
3512EUI/3516EUI	2700 FRAME	HV(>5KV)	EMCP 4.3/4.4	1–7 9 9 18 20 22 26 27 37 46–48 50 61–63 65 69 71–74 81 102 103
3516EUI	Y5000 FRAME	HV(>5KV)	EMCP 4.3/4.4	1–7 9 13 18 20 23 26 27 40 46–48 53 61–63 68 69 71–74 81 102 103
3516EUI	B5600H4 FRAME	HV(>5KV)	EMCP 4.3/4.4	1–7 9 12 18 20 23 26 27 39 46–48 52 61–63 67 69 71–74 81 102 103
3516EUI	3000 FRAME	HV(>5KV)	EMCP 4.3/4.4	1–7 9 11 18 20 22 26 27 38 46–48 51 61–63 66 71–74 81 102 103
C175–16	1800 FRAME	LV(<1000V)	EMCP 4.3/4.4	1–7 9 18 20 21 24 26 27 31 46–49 61–64 69 71–74 87 89 111 112 113
C175–16	1800 FRAME	MV(1000–5000V)	EMCP 4.3/4.4	1–7 9 18 20 26 27 32 33 46–48 61–64 69 71–74 87 89 111 112 113
C175–16/C175–20	3000 FRAME	MV–HV(>1000V)	EMCP 4.3/4.4	1–7 9 11 18 20 22 26 27 38 46–48 51 61–63 66 71–74 89 111 112 113
G3500A	1400 FRAME	LV(<1000V)/MV–HV(>1000V)	EMCP 4.3/4.4	1–7 16–18 20–22 26–35 41 49 57–64 69–74 92 116 119
G3500C/E	1600/1800 FRAME	LV(<1000V)/MV–HV(>1000V)	EMCP 4.3/4.4	1–7 16–18 20–22 26–35 41 49 57–64 69–74 90 114 119
G3500C/E	2600/2700 FRAME	HV(>5KV)	EMCP 4.3/4.4	1–7 10 16–18 20 22 26–30 37 42 50 57–63 65 69 71–74 90 114 119
G3500H	1600/1800 FRAME	LV(<1000V)/MV–HV(>1000V)	EMCP 4.3/4.4	1–7 16–18 20–22 26–35 41 49 57–64 69–74 94–96 118 119
G3500H	2700 FRAME	HV(>5KV)	EMCP 4.3/4.4	1–7 10 16–18 20 22 26–30 37 38 42 50 57–63 65 69 71–74 94–96 118 119
G3500H	3000 FRAME	HV(>5KV)	EMCP 4.3/4.4	1–7 11 16–18 20 22 26–30 37 38 42 51 57–63 66 69 71–74 94–96 118 119
G3500B	1600 FRAME	LV(<1000V)/MV–HV(>1000V)	EMCP 4.3/4.4	1–7 16–18 20–22 26–35 41 49 57–64 69 71–74 93 117 119
G3500 STANDBY	1400/1600/1800 FRAME	LV(<1000V)/MV–HV(>1000V)	EMCP 4.3/4.4	1–7 16–18 20–22 26–35 41 49 57–64 69 71–74 91 115 119
C27	1200/1400 FRAME	LV(<1000V)	EMCP 4.2B	1–8 18–21 24 31 43–45 61–64 69 82 83 98–101
C32	1200/1400 FRAME	LV(<1000V)	EMCP 4.2B	1–8 18–21 24 31 43–45 49 61–64 69 82 83 98–101
C32	1400 FRAME	MV(1000–5000V)	EMCP 4.2B	1–8 18–20 33 36 43–45 61–64 69 82 83 98–101
C32	2700 FRAME	HV(>5KV)	EMCP 4.2B	1–8 10 18–20 22 37 43–45 50 61–63 65 69 83 98–101
3512MUI/3516MUI	1400/1600/1800 FRAME	LV(<1000V)	EMCP 4.2B	1–8 18–20 33 36 43–45 54–56 61–64 69 84 85 104 105
3512MUI/3516MUI	1400/1600/1800 FRAME	MV(1000–5000V)	EMCP 4.2B	1–8 18–21 24 31 43–45 49 54–56 61–64 69 84 85 104 105
3512MUI/3516MUI	2700 FRAME	HV(>5KV)	EMCP 4.2B	1–8 10 18–20 22 37 43–45 50 54–56 61–63 65 69 85 104 105
3512EUI/3516EUI	1400/1600/1800 FRAME	LV(<1000V)	EMCP 4.2B	1–8 31 43–45 49 61–64 69 80 81 102 103 104 105
3512EUI/3516EUI	1400/1600/1800 FRAME	MV(1000–5000V)	EMCP 4.2B	1–8 18–20 33 36 43–45 61–64 69 80 81 102 103
3512EUI/3516EUI	2700 FRAME	HV(>5KV)	EMCP 4.2B	1–8 10 18–20 22 37 43–45 50 61–63 65 69 81 102 103
3516EUI	Y5000 FRAME	HV(>5KV)	EMCP 4.2B	1–8 13 18–20 23 40 43–45 53 61–63 68 69 81 102 103
3516EUI	B5600H4 FRAME	HV(>5KV)	EMCP 4.2B	1–8 12 18–20 23 39 43–45 52 61–63 67 69 81 102 103
3516EUI	3000 FRAME	HV(>5KV)	EMCP 4.2B	1–8 11 18–20 22 38 43–45 52 61–63 66 69 81 102 103
C175–16	1800 FRAME	LV(<1000V)	EMCP 4.2B	1–8 18–21 24 31 43–45 49 61–64 69 87 89 111 112 113
C175–16	1800 FRAME	MV(1000–5000V)	EMCP 4.2B	1–8 18–20 33 36 43–45 61–64 69 87 89 111 112 113
C175–16/C175–20	3000 FRAME	MV–HV(>1000V)	EMCP 4.2B	1–8 11 18–20 22 38 43–45 52 61–63 66 69 89 111 112 113

SHEET INDEX 3
CATERPILLAR: CONFIDENTIAL GREEN

	1E5167A	INT–PROP
	1E2733	DRAWING – AUTOCAD
	1E0198W	BRAND MARKINGS
	1E0013G	CONFIDENTIALITY
	1E0012A	INTERPRETATION
NOTE	1E0011	INTPR & TOL

SPEC NO.	NAME
DRN	ARUN GOPAL
CHK	LYLE SEWALL
APPD	J.D. ELDER

CONCEPT | EXP | PRE PROD. | PROD.

RECORDS

UNLESS OTHERWISE SPECIFIED DIMENSIONS ARE IN MM [INCHES] DIMENSIONS W/O TOL ARE BASIC

SCALE: NONE — THIRD ANGLE PROJECTION — SHEET 3 OF 119

CHG	DATE
01	23AUG19
00	11JUL18

CATERPILLAR INC.

THE INFORMATION HEREON IS THE PROPERTY OF CATERPILLAR INC. AND/OR ITS SUBSIDIARIES. WITHOUT WRITTEN PERMISSION, ANY COPYING, TRANSMITTAL TO OTHERS, AND ANY USE EXCEPT THAT FOR WHICH IT IS LOANED IS PROHIBITED.

DIAGRAM – WIRING
MODULAR CONTROLS

521–9364 | VER - | DES ☒ SUB ☐ | CONTROL W944 | D

METRIC 521-9364

SHEET 43,44,46,49 55,18,60,77 NOTE A: SEE LEBE0049 TO PROGRAM EMCP 4.2B INPUTS AND OUTPUTS.

SHEET 43,46,54,18,21,22,23 NOTE B: REMOVE JUMPER BAR BETWEEN ESTOP-A AND ESTOP-B TERMINAL BOARD POINTS AFTER INSTALLATION OF C27/C32 ENCLOSURE OR ENGINE MOUNTED EMERGENCY STOP. REMOVE THE JUMPER WIRE FROM BTRY NEG AND ESTOP-A WITH THE INSTALLATION OF THE CUSTOMER SUPPLIED ESTOP. (CUSTOMER ESTOP IS CONNECTED ACROSS TERMINALS BTRY NEG AND ESTOP-A.)

SHEET 18,19 NOTE C: CUSTOMER LOADING FROM TERMINAL STRIP SHOULD BE LIMITED TO 5A RESISTIVE ONLY AND FOR EXCESS DEMAND USE BATTERY CONNECTION.

SHEET 44,56,18,21,22 23,71,72,73,74 NOTE D: SEE LEBE0010 FOR EMCP 4 SCADA DATA LINKS.

SHEET 44,56,18,21,22,23 NOTE E: SEE SHEET "CUSTOMER INTERCONNECTS SHEET 3 OF 12" FOR CONNECTION TO REMOTE DEVICES.

SHEET 45,20 NOTE F: SEE LEBE0049 TO PROGRAM DISCRETE I/O MODULE INPUTS AND OUTPUTS.

SHEET 64 NOTE G: WHEN THE ENGINE IS RUNNING, THE EMCP ENERGIZES THE SPDR, CR1, CR21 & CR22 RELAYS TO DISABLE AC SHORE POWER.

SHEET 48,64,65,66,19,21,22,23 NOTE H: AMPACITY OF SHORE POWER CUSTOMER WIRING SHOULD BE DETERMINED BY OPTIONS INSTALLED.

SHEET 48,20 NOTE J: USE THE EXISTING RESISTOR ON THE DC TERMINAL BLOCK.

SHEET 48,27 NOTE K: DIODE 1 IS USED FOR BEST BATTERY CIRCUIT. SEE LEBE0007 (EMCP 4.3, 4.4 GENERATOR SET CONTROL A&I GUIDE) AND MANUAL UENR1210 (SYSTEMS OPERATION TROUBLESHOOTING TESTING AND ADJUSTING - SOTTA) FOR CONNECTIONS DETAILS.

SHEET 49,60 NOTE L: REFERENCE 524-1257 FOR CIRCUIT BREAKER INSTALLATION DRAWINGS.

SHEET 44,49,55,18,60 NOTE M: DIGITAL INPUT 3 IS ONLY AVAILABLE ON PACKAGES WITHOUT A CIRCUIT BREAKER. DIGITAL INPUT 5, 6 ARE USED BY THE FACTORY FOR THE C175 GENSET.

SHEET 44,55,18,22,23 NOTE N: ANALOG INPUT (-)'S MUST BE REFERENCED TO BATTERY (-).(EMCP 4.2B)

SHEET 19 NOTE P: CIRCUIT BREAKER TERMINAL LABELS ARE LOCATION BASED, LF=LEFT, RT=RIGHT, RR=REAR.

SHEET 18,21,22,23 NOTE R: RECOMMENDED WIRING FOR ACTIVE SENSORS.

SHEET 18,21,22,23 NOTE S: RECOMMENDED WIRING FOR RESISTIVE SENSORS.

SHEET 48,71,72,73,74 NOTE U: THE EMCP 4.4 MULTIPLE GENSET DATA LINK (MGDL) FEATURE IS AN ETHERNET DATA LINK USED BETWEEN ENGINE/GENERATOR SETS FOR ON-PACKAGE PARALLELING AND CONTROL.THE EMCP 4.4 MGDL FEATURE DOES NOT EMPLOY A MASTER CONTROLLER STRATEGY FOR PARALLELING OPERATION. THE EMCP 4.4 CONTROLLER USES A PROPRIETARY PROTOCOL TO COMMUNICATE INFORMATION BETWEEN GENERATOR SETS TO CONTROL PARALLELING FEATURES LIKE DEAD BUS ARBITRATION, SYNCHRONIZING, LOAD SHARING AND LOAD SEQUENCING. THE EMCP 4.4 IS NOT DESIGNED OR INTENDED TO CONNECT TO THIRD-PARTY PRODUCTS OVER THIS DATA LINK. SEE LEBE0031 (EMCP 4.4 MULTIPLE GENSET DATA LINK) FOR DETAILED CONFIGURATION AND OPERATION GUIDE.

SHEET 48,71,72,73,74 NOTE V: LEBE0032 (EMCP 4.4 MULTIPLE GENSET DATA LINK QUICK START GUIDE) PROVIDES INFORMATION NECESSARY TO SET UP THE MULTIPLE GENSET DATA LINK (MGDL) FEATURE FOR OPERATION ON CAT GENERATOR SETS. THIS QUICK START GUIDE IS NOT A DETAILED CONFIGURATION AND OPERATION GUIDE. FOR STEPS TO PROPERLY SETUP MGDL HARDWARE, SETPOINT CONFIGURATION, AND ALL MGDL PARALLELING FEATURE OPERATION REVIEW THE EMCP MULTIPLE GENSET DATA LINK CONIFIGURATION & OPERATION GUIDE.

SHEET 71,72,73,74 NOTE W: ETHERNET NETWORK TOPOLOGY SHOWN USING 6-PORT ETHERNET SWITCH. ETHERNET SWITCH AND CABLES SUPPLIED BY OTHERS.

SHEET 27 NOTE X: ONE, AND ONLY ONE, UNIT MUST BE DESIGNATED AS THE LEAD UNIT. THIS IS ACCOMPLISHED BY CONNECTING THE BEST BATTERY POSITIVE LINE OF A UNIT TO THE HWDBA 3 INPUT OF THAT SAME UNIT. IF BREAKER CONTROLS ON A GENSET ARE WIRED TO THE EMCP 4.4 INPUTS, THE BREAKER WILL NOT CLOSE IF THE CLOSE CONTROL IS ACTIVATED UNLESS HWDBA IS ENABLED AND THE LEAD UNIT CONNECTION IS INSTALLED.

SHEET 22,23 NOTE Y: USE 169-8670 CONNECTOR WITH 155-2276 WEDGE

SHEET 33,34,35,42 NOTE Z: FUSES ARE DEDICATED TO EMCP VOLTAGE SENSING ONLY, NOT FOR OTHER USES.

SHEET 57,58 NOTE AA: REFER BELOW TABLE FOR MODEL AND SERIAL NUMBER PREFIX TO IDENTIFY RELEVANT CIRCUIT

MODEL	SERIAL NO PREFIX
C175-16	TE8 , TB8
C175-20	TZ8
3516 MUI	YL2 , JCG , SNC
3516	LY3 , LY4 , ZNT , LY5 , LY6 , LYM , JD7 , JCH , JCN , JCB , PXY , LNW , LNZ , SNE , SN7 , JGX , N7N , F38
3512 MUI	LY7 , JM2 , LNF , TLL
3512	LY8 , LY9 , LYH , LYP , JM3 , JM4 , LNJ , LNM , TLN , TLT
3516 GEARBOX	GBZ
C32	JSJ , TZJ
C27	2A3
G3516 B	ZBC , E6T
G3516 A	ZAZ , ZBA
G3512 STANDBY	E2X , E2P , E2T , E2N
G3512 E	NWC
G3520 E	GZE
G3512 H	GF5 , GF4
G3516 H	NWH , NWJ
G3512 H	GFP , GFR
G3516 C	NWD , NWF , NWE
G3520 C	RLP , LGS , GZB , GZA , GZJ

ALL CUSTOMER WIRE SIZES ARE 16 AWG/1.0sq mm MINIMUM, 600V STRANDED WIRE, UNLESS OTHERWISE SPECIFIED.
THIS SCHEMATIC REPRESENTS DIAGRAM-WIRING 491-3960/02 (MODULAR CONTROLS)
THIS SCHEMATIC REPRESENTS DIAGRAM-WIRING 237-9000/03 (3500 EUI) ENGINE
THIS SCHEMATIC REPRESENTS DIAGRAM-WIRING 533-6559/01 (3516B DGB) ENGINE
THIS SCHEMATIC REPRESENTS DIAGRAM-WIRING 415-1146/04 (3500 MUI) ENGINE
THIS SCHEMATIC REPRESENTS DIAGRAM-WIRING 420-8316/02 (C175-16) ENGINE
THIS SCHEMATIC REPRESENTS DIAGRAM-WIRING 420-8317/00 (C175-20) ENGINE
THIS SCHEMATIC REPRESENTS DIAGRAM-WIRING 260-9515/06 (C27/C32) ENGINE
THIS SCHEMATIC REPRESENTS DIAGRAM-WIRING 324-7474/07, 292-5340/03, 329-4396/09, 324-7475/05 (G3500 C&E) ENGINE
THIS SCHEMATIC REPRESENTS DIAGRAM-WIRING 550-1000/01 (G3500 STAND BY) ENGINE
THIS SCHEMATIC REPRESENTS DIAGRAM-WIRING 384-1372/03 (G3500 A) ENGINE
THIS SCHEMATIC REPRESENTS DIAGRAM-WIRING 237-5810/04 (G3500 B) ENGINE
THIS SCHEMATIC REPRESENTS DIAGRAM-WIRING 358-6954/09, 533-7000/02 (G3500 H) ENGINE

NOTES
CATERPILLAR: CONFIDENTIAL GREEN

	1E5167A	INT-PROP
	1E2733	DRAWING - AUTOCAD
	1E0198W	BRAND MARKINGS
	1E0013G	CONFIDENTIALITY
	1E0012A	INTERPRETATION
	1E0011	INTPR & TOL

SPEC NO. NAME
DRN ARUN GOPAL
CHK LYLE SEWALL
APPD J.D. ELDER
CON-CEPT EXP PRE PROD. PROD.
RECORDS
UNLESS OTHERWISE SPECIFIED DIMENSIONS ARE IN MM [INCHES] DIMENSIONS W/O TOL ARE BASIC
SCALE: NONE
THIRD ANGLE PROJECTION
01 23AUG19
00 11JUL18
CHG DATE
SHEET 4 OF 119

CATERPILLAR INC.

THE INFORMATION HEREON IS THE PROPERTY OF CATERPILLAR INC. AND/OR ITS SUBSIDIARIES. WITHOUT WRITTEN PERMISSION, ANY COPYING, TRANSMITTAL TO OTHERS, AND ANY USE EXCEPT THAT FOR WHICH IT IS LOANED IS PROHIBITED.

DIAGRAM - WIRING
MODULAR CONTROLS
521-9364 VER - CONTROL DES SUB W944 D

METRIC 521–9364

EMCP 4.3/4.4 I/O DEFAULT CONFIGURATION

DESCRIPTION	RELAY	3500–EUI	C175–16/C175–20	C27 & C32	G3500
ESTOP (DEDICATED DI–1)		E–STOP (DEDICATED)	E–STOP (DEDICATED)	E–STOP (DEDICATED)	E–STOP (DEDICATED)
START (DEDICATED DI–2)		REMOTE INITIATE (DEDICATED)	REMOTE INITIATE (DEDICATED)	REMOTE INITIATE (DEDICATED)	REMOTE INITIATE (DEDICATED)
PROG. DI–01		SPARE	SPARE	FUEL LEAK (ENCLOSURE)	SPARE
PROG. DI–02		SPARE	SPARE	AC BATTERY CHARGER FAILURE (ENCLOSURE)	SPARE
PROG. DI–03		52G#1 OPEN (OPTIONAL)	52G#1 OPEN (OPTIONAL)	52G#1 OPEN (OPTIONAL)	52G#1 OPEN (OPTIONAL)[3]
PROG. DI–04		52G#2 OPEN (OPTIONAL)	52G#2 OPEN (OPTIONAL)	52G#2 OPEN (OPTIONAL)	52G#2 OPEN (OPTIONAL)[3]
PROG. DI–05		GEAR OIL PRESSURE SWITCH(GEARBOX)	JACKET WATER COOLANT LEVEL ALARM	SPARE	SPARE
PROG. DI–06		SPARE	SCAC COOLANT LEVEL ALARM	SPARE	SPARE
PROG. DI–07		SPARE	SPARE	SPARE	SPARE
PROG. DI–08		SPARE	SPARE	SPARE	SPARE
ISOLATED DI–01		SPARE	SPARE	SPARE	SPARE
ISOLATED DI–02		SPARE	SPARE	SPARE	SPARE
ISOLATED DI–03		SPARE	SPARE	SPARE	SPARE
ISOLATED DI–04		SPARE	SPARE	SPARE	SPARE
ANALOG INPUT–1		GEAR OIL TEMPERATURE (GEARBOX)	SPARE	SPARE	SPARE
ANALOG INPUT–2		SPARE	SPARE	SPARE	SPARE
ANALOG INPUT–3		SPARE	SPARE	SPARE	SPARE
ANALOG INPUT–4[1]		SPARE	SPARE	SPARE	SPARE
DO–1	R1	STARTER MOTOR MAG RELAY	SPARE	SPARE	STARTER MOTOR MAG RELAY
DO–2	R2	SPARE	SPARE	SPARE	START(FUEL ENABLE)
DO–3	R3	SPARE	SPARE	DISABLE AUX AC SUPPLY (ENCLOSURE)	ECU FAULT RESET
DO–4		SPARE	SPARE	SPARE	SPARE
DO–5		SPARE	SPARE	SPARE	SPARE
DO–6		COMMON SHUTDOWN	COMMON SHUTDOWN	COMMON SHUTDOWN	COMMON SHUTDOWN
DO–7		SPARE	SPARE	SPARE	SPARE
DO–8		SPARE	SPARE	SPARE	SPARE
DO–9		SPARE	SPARE	SPARE	SPARE
DO–10		SPARE	SPARE	SPARE	SPARE
DO–11		SPARE	SPARE	SPARE	SPARE
DO–12	R12	SPARE	SPARE	SPARE	COMMON SHUTDOWN
DO–13	R13	SPARE	IDLE SPEED COMMAND	IDLE SPEED COMMAND	GSOV[2]
DO–14	R14	PRELUBE	SPARE	SPARE	RATED/IDLE SPEED[2]
DO–15	R15	DISABLE AUX AC SUPPLY	DISABLE AUX AC SUPPLY	DISABLE AUX AC SUPPLY	DISABLE AUX AC SUPPLY
DO–16	R16	SPARE	SPARE	SPARE	GOVERNOR 24VDC[2]
DO–17[1]		SPARE	SPARE	SPARE	SPARE
DIDI 1[1]		GROUP START	GROUP START	GROUP START	GROUP START
DIDI 2[1]		CIRCUIT BREAKER OVERCURRENT ALARM	CIRCUIT BREAKER OVERCURRENT ALARM	CIRCUIT BREAKER OVERCURRENT ALARM	CIRCUIT BREAKER OVERCURRENT ALARM
DIDI 3[1]		MANUAL CIRCUIT BREAKER OPEN	MANUAL CIRCUIT BREAKER OPEN	MANUAL CIRCUIT BREAKER OPEN	MANUAL CIRCUIT BREAKER OPEN
DIDI 4[1]		MANUAL CIRCUIT BREAKER CLOSE	MANUAL CIRCUIT BREAKER CLOSE	MANUAL CIRCUIT BREAKER CLOSE	MANUAL CIRCUIT BREAKER CLOSE
DDO 1[1]	R17	DEAD BUS ARBITRATION RELAY	DEAD BUS ARBITRATION RELAY	DEAD BUS ARBITRATION RELAY	DEAD BUS ARBITRATION RELAY
DDO 2[1]	R20	CIRCUIT BREAKER CLOSE	CIRCUIT BREAKER CLOSE	CIRCUIT BREAKER CLOSE	CIRCUIT BREAKER CLOSE
DDO 3[1]	R19	CIRCUIT BREAKER OPEN	CIRCUIT BREAKER OPEN	CIRCUIT BREAKER OPEN	CIRCUIT BREAKER OPEN

[1] EMCP 4.4 ONLY
[2] G3500A SERIES GAS PACKAGES ONLY
[3] EMCP 4.3 ONLY

EMCP 4.2B I/O DEFAULT CONFIGURATION

DESCRIPTION		3500–EUI	3500–MUI	C175–16/C175–20	C27 & C32
RELAY 01	(R01)	SMMS	SMMS	SPARE	SPARE
RELAY 02	(R02)	SPARE	SPARE	SPARE	SPARE
RELAY 03	(R03)	SPARE	SPARE	SPARE	DISABLE AUX AC SUPPLY (ENCLOSURE)
RELAY 04	(R04)	SPARE	FUEL ENABLE	SPARE	SPARE
RELAY 05	(R05)	PRELUBE	IDLE/RATED SPEED	SPARE	SPARE
RELAY 06	(R06)	COMMON SHUTDOWN	COMMON SHUTDOWN	COMMON SHUTDOWN	COMMON SHUTDOWN
RELAY 07	(R07)	LOW IDLE SPEED	SPARE	LOW IDLE SPEED	LOW IDLE SPEED
RELAY 08	(R08)	SPARE	SPARE	SPARE	SPARE
DIGITAL OUTPUT #1	(D01)	DISABLE AUX AC SUPPLY	DISABLE AUX AC SUPPLY	DISABLE AUX AC SUPPLY	DISABLE AUX AC SUPPLY
DIGITAL OUTPUT #2	(D02)	CONTROL SIGNAL TO IVR (DEDICATED)	CONTROL SIGNAL TO IVR (DEDICATED)	CONTROL SIGNAL TO IVR (DEDICATED)	CONTROL SIGNAL TO IVR (DEDICATED)
DIGITAL INPUT E–STOP	(E–STOP)	E–STOP (DEDICATED)	E–STOP (DEDICATED)	E–STOP (DEDICATED)	E–STOP (DEDICATED)
DIGITAL INPUT START	(START)	REMOTE INITIATE (DEDICATED)	REMOTE INITIATE (DEDICATED)	REMOTE INITIATE (DEDICATED)	REMOTE START (DEDICATED)
DIGITAL INPUT #1	(DI1)	SPARE	SPARE	SPARE	FUEL LEAK (ENCLOSURE)
DIGITAL INPUT #2	(DI2)	SPARE	SPARE	SPARE	AC BATTERY CHARGER FAILURE (ENCLOSURE)
DIGITAL INPUT #3	(DI3)	52G#1 OPEN (OPTIONAL)	52G#1 OPEN (OPTIONAL)	52G#1 OPEN (OPTIONAL)	52G#1 OPEN (OPTIONAL)
DIGITAL INPUT #4	(DI4)	52G#2 OPEN (OPTIONAL)	52G#2 OPEN (OPTIONAL)	52G#2 OPEN (OPTIONAL)	52G#2 OPEN (OPTIONAL)
DIGITAL INPUT #5	(DI5)	GEAR OIL PRESSURE SWITCH(GEARBOX)	ENGINE COOLANT LEVEL ALARM	JACKET WATER COOLANT LEVEL ALARM	SPARE
DIGITAL INPUT #6	(DI6)	SPARE	SPARE	SCAC COOLANT LEVEL ALARM	SPARE
ANALOG INPUT #1	(AI1)	GEAR OIL TEMPERATURE (GEARBOX)	ENGINE OIL PRESSURE	SPARE	SPARE
ANALOG INPUT #2	(AI2)	SPARE	ENGINE COOLANT TEMPERATURE	SPARE	SPARE
ANALOG INPUT #3	(AI3)	SPARE	ENGINE OIL TEMPERATURE	SPARE	SPARE

NOTES
CATERPILLAR: CONFIDENTIAL GREEN

1E5167A	INT–PROP	
1E2733	DRAWING – AUTOCAD	
1E0198W	BRAND MARKINGS	
1E0013G	CONFIDENTIALITY	
1E0012A	INTERPRETATION	
1E0011	INTPR & TOL	

SPEC NO. NAME

DRN ARUN GOPAL
CHK LYLE SEWALL
APPD J.D. ELDER
CON-SEPT EXP PRE PROD. PROD.
RECORDS ☒

UNLESS OTHERWISE SPECIFIED
DIMENSIONS ARE IN MM [INCHES]
DIMENSIONS W/O TOL ARE BASIC

SCALE: NONE
0 10mm 20 30
THIRD ANGLE PROJECTION
SHEET 5 OF 119

CHG	DATE
01	23AUG19
00	11JUL18

CATERPILLAR INC.

THE INFORMATION HEREON IS THE PROPERTY OF CATERPILLAR INC. AND/OR ITS SUBSIDIARIES. WITHOUT WRITTEN PERMISSION, ANY COPYING, TRANSMITTAL TO OTHERS, AND ANY USE EXCEPT THAT FOR WHICH IT IS LOANED IS PROHIBITED.

DIAGRAM – WIRING
MODULAR CONTROLS

521–9364 VER – CONTROL DES ☒ SUB W944 D

METRIC 521-9364

ABBREVIATIONS

52G	GENERATOR CIRCUIT BREAKER
AC	ALTERNATING CURRENT
ADEM	ADVANCED DIESEL ENGINE MANAGEMENT
AFDPS	AIR FILTER DIFFERENTIAL PRESSURE SWITCH
ALM	ALARM
ALT	ALTERNATOR
AI	ANALOG INPUT
ARB	ARBITRATION
ASOS	AIR SHUTOFF SOLENOID
ASOR	AIR SHUTOFF RELAY
ASOSR	AIR SHUTOFF SOLENOID RELAY
ASS	AIR START SOLENOID
AUX	AUXILIARY
BAT	BATTERY
BATT–	BATTERY NEGATIVE
BATT+	BATTERY POSITIVE
BB	BEST BATTERY
BKR	BREAKER
BTRY	BATTERY
C	COMMON
CAM	CAMSHAFT
CAN	CONTROLLER AREA NETWORK
CB	CIRCUIT BREAKER
CBCPB	CIRCUIT BREAKER CLOSE PUSH BUTTON
CBOPB	CIRCUIT BREAKER OPEN PUSH BUTTON
CDL	CAT DATA LINK
CHG	CHARGER
CR	CONTROL RELAY
CS	CONTROL SIGNAL
CT	CURRENT TRANSFORMER
CW	CLOCKWISE
D	DIODE
DC	DIRECT CURRENT
DDO	DEDICATED DIGITAL OUTPUT
DI	DIGITAL INPUT
DIAG	DIAGNOSTICS
DIDI	DEDICATED ISOLATED DIGITAL INPUT
DIFF	DIFFERENTIAL
DIO	DIGITAL INPUT/OUTPUT
DO	DIGITAL OUTPUT
DTR	DATA TERMINAL READY
ECM	ELECTRONIC CONTROL MODULE
ECMR	ELECTRONIC CONTROL MODULE RELAY
EIH	ENGINE INTERFACE HARNESS
EJ	ETHERNET JACK
EM	EXCITATION MODULE
EMCP	ELECTRONIC MODULAR CONTROL PANEL
ENG	ENGINE
ES	ETHERNET SWITCH
ESPB	EMERGENCY STOP PUSH BUTTON
ESTOP	EMERGENCY STOP
EUI	ELECTRONIC UNIT INJECTOR
F	FUSE
FPP	FUEL PRIMING PUMP
FPR	FUEL PRIMING RELAY
GDI	GRID DEVICE INTERFACE
GEN	GENERATOR
GND	GROUND
GOV	GOVERNOR
GP	GROUP
GFCT	GROUND FAULT CT
HPC	HYSTAT PRESSURE CONTROL
HWDBA	HARDWIRED DEAD BUS ARBITRATION
HWLSLD	HARDWIRED LOAD SENSE LOAD DEMAND
HZ	HERTZ
I/O	INPUTS/OUTPUTS
IDI	ISOLATED DIGITAL INPUT
IE	INTERNAL EXCITATION
ISOL	ISOLATED
IVR	INTEGRATED VOLTAGE REGULATOR
JW	JACKET WATER
JWH	JACKET WATER HEATER
KW	KILOWATT
KVAR	KILOVOLT–AMPERE REACTIVE
L	LAMP
LH	LEFT HAND
LHASOCB	LEFT HAND AIR SHUTOFF CIRCUIT BREAKER
LS	LAMP SWITCH
LSM	LOAD SHARE MODULE
LV	LOW VOLTAGE
LVL	LEVEL
MAG	MAGNETIC
MBUS	MODBUS
MGDL	MULTIPLE GENSET DATA LINK
MPU	MAGNETIC PICKUP
MUI	MECHANICAL UNIT INJECTOR
MV	MEDIUM VOLTAGE
N	NEUTRAL
NC	NORMALLY CLOSED
NEG	NEGATIVE
N/C	NO CONNECTION
NFPA	NATIONAL FIRE PROTECTION AGENCY
NO	NORMALLY OPEN
OPT	OPTIONAL
P	PUMP
PB	PUSH BUTTON
PIO	PARALLELING INPUT OUTPUT
PM	PRELUBE MOTOR
PMG	PERMANENT MAGNET GENERATOR
POS	POSITIVE
POT	POTENTIOMETER
PPRM	PRELUBE PRESSURE RELAY MAINTAINED
PPRS	PRELUBE PRESSURE RELAY START
PPS	PRELUBE PRESSURE SWITCH
PR	PRELUBE RELAY
PROG	PROGRAMMABLE
PS	POWER SUPPLY
PT	POTENTIAL TRANSFORMER
PWM	PULSE WIDTH MODULATION
PWR	POWER
R	RELAY
REF	REFERENCE
RES	RESISTOR
RH	RIGHT HAND
RHASOCB	RIGHT HAND AIR SHUTOFF CIRCUIT BREAKER
RLY	RELAY
RO	RELAY OUTPUT
RTD	RESISTANCE TEMPERATURE DETECTOR
RTN	RETURN
RXD	RECEIVE DATA
SCAC	SEPARATE CIRCUIT AFTER COOLER
SH	SHIELD
SHNT	SHUNT
SMMS	STARTER MOTOR MAGNETIC SWITCH
SNSR	SENSOR
SPD	SPEED
SPDR	SHORE POWER DISCONNECT RELAY
ST	SERVICE TOOL
STR	START
SR	STARTER RELAY
STR	SHUNT TRIP RELAY
STRTR	STARTER
SW	SWITCH
TB	TERMINAL BOARD
TDC	TOP DEAD CENTER
TEL	TELEMATICS
TEMP	TEMPERATURE
TMG	TIMING
THRT	THROTTLE
TXD	TRANSMIT DATA
UV	UNDERVOLTAGE RELEASE
V	VOLTS
VA	VOLT AMPERES
VR	VOLTAGE REGULATOR
VS	VOLTAGE SUPPLY
XFMR	TRANSFORMER

WIRE COLOR

RD	RED
WH	WHITE
OR	ORANGE
YL	YELLOW
CL	CLEAR
BK	BLACK
GY	GRAY
CU	COPPER
BR	BROWN
GN	GREEN
BU	BLUE
GN_YL	GREEN/YELLOW
VI	VIOLET
BK_WH	BLACK/WHITE

LAMP COLOR

R	RED
G	GREEN
Y	YELLOW
A	AMBER
W	WHITE
O	ORANGE
B	BLUE

LINE STYLES

STANDARD WIRING

CUSTOMER SUPPLIED WIRING

SHIELDED CABLE

TWISTED PAIR

CIRCUIT BREAK

WIRE CONNECTION

CIRCUITS NOT CONNECTED

OR CIRCUIT CONNECTED

COMPONENT CALLOUT

OPTIONAL

SYMBOLS

RELAY CONTACT (NORMALLY OPEN)

GROUND

LAMP

XX AMPS 1 FX 2 FUSE

DIODE

HEATING ELEMENT

RELAY COIL

P PUMP MOTOR

EMERGENCY STOP PUSH BUTTON

TOGGLE SWITCH

20A CIRCUIT BREAKER (1 POLE)

TERMINAL BOARD POINT

PIN

SOCKET

POTENTIOMETER

3–WIRE RTD

2–WIRE RTD

TEMPERATURE SWITCH (NORMALLY CLOSED)

CURRENT TRANSFORMER

EXCITER COIL

120 OHMS TERMINATING RESISTOR

BATTERY CHARGER

1 2 3 4 MULTI–PIN CONNECTOR

RECEPTACLE PLUG

X(Y) PIN X Y PIN CONNECTOR

ABBREVIATIONS & SYMBOLS
FOR NOTES SEE SHEET 4
CATERPILLAR: CONFIDENTIAL GREEN

NOTE	SPEC NO.	NAME
	1E5167A	INT–PROP
	1E2733	DRAWING – AUTOCAD
	1E0198W	BRAND MARKINGS
	1E0013G	CONFIDENTIALITY
	1E0012A	INTERPRETATION
	1E0011	INTPR & TOL

DRN ARUN GOPAL
CHK LYLE SEWALL
APPD J.D. ELDER
CON-SEPT EXP PRE PROD. PROD.
RECORDS ☒

UNLESS OTHERWISE SPECIFIED
DIMENSIONS ARE IN MM [INCHES]
DIMENSIONS W/O TOL ARE BASIC

SCALE: NONE
0 10mm 20 30
SHEET 6 OF 119
THIRD ANGLE PROJECTION

CHG	DATE
01	23AUG19
00	11JUL18

CATERPILLAR INC.

THE INFORMATION HEREON IS THE PROPERTY OF CATERPILLAR INC. AND/OR ITS SUBSIDIARIES. WITHOUT WRITTEN PERMISSION, ANY COPYING, TRANSMITTAL TO OTHERS, AND ANY USE EXCEPT THAT FOR WHICH IT IS LOANED IS PROHIBITED.

DIAGRAM – WIRING
MODULAR CONTROLS

521–9364 VER – CONTROL DES ☒ SUB W944 D

METRIC 521–9364

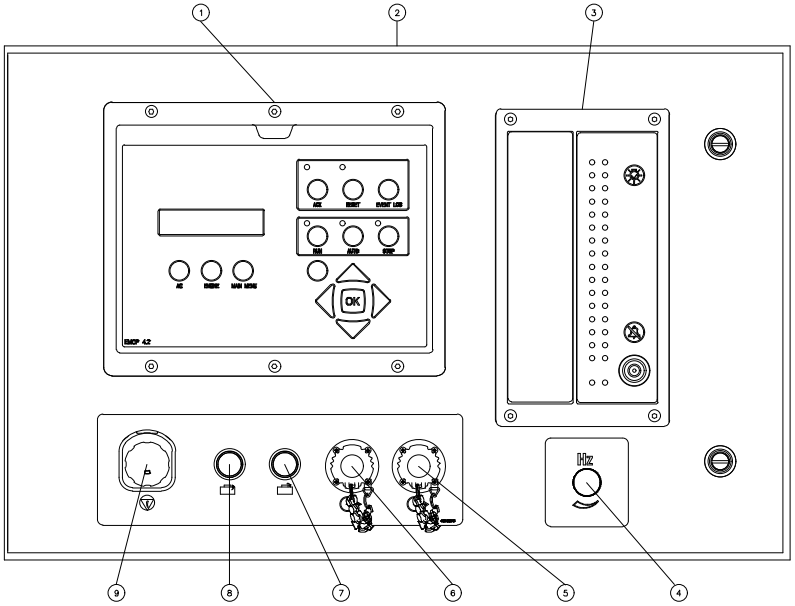

FRONT VIEW OF CONTROL PANEL

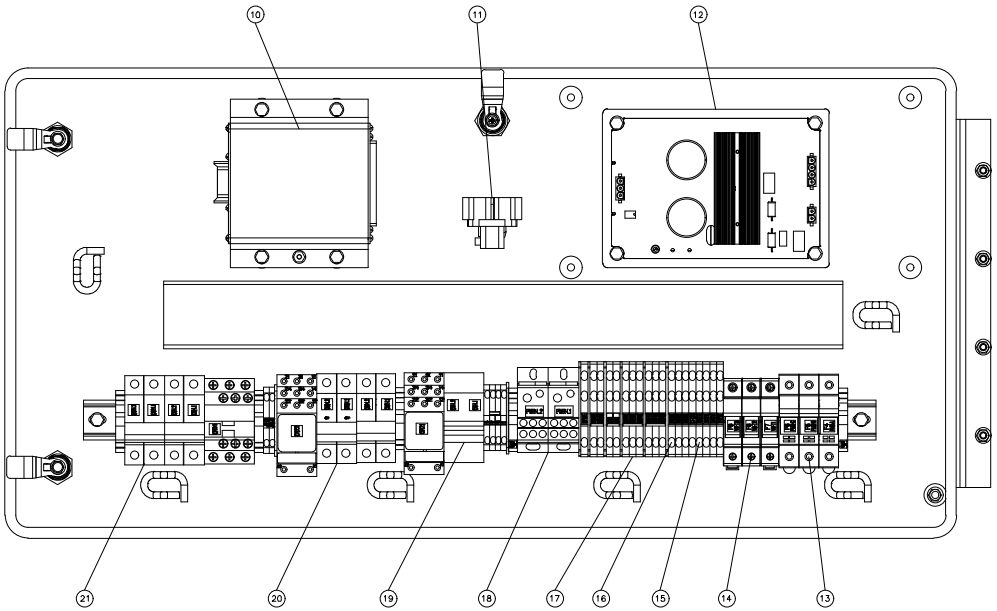

REAR MOUNTED VOLTAGE REGULATOR PANEL

1. EMCP 4
2. EMCP 4 PANEL
3. RS–485 ANNUNCIATOR (OPTIONAL)
4. SPEED/Hz ADJUST (OPTIONAL)
5. SERVICE TOOL CONNECTOR #2 (CAN2: EXPANSION MODULES, RTD AND DIO)
6. SERVICE TOOL CONNECTOR #1 (CDL& CAN1: ADEM, EMCP, THERMOCOUPLE, CAT CONNECT)
7. CIRCUIT BREAKER CLOSE PUSH BUTTON (RED LIGHT) (EMCP 4.4 ONLY)
8. CIRCUIT BREAKER TRIP PUSH BUTTON (GREEN LIGHT) (EMCP 4.4 ONLY)
9. EMERGENCY STOP PUSH BUTTON
10. RTD MODULE (OPTIONAL)
11. CAN 2 TEE CONNECTOR
12. IVR MODULE (EM10/EM15)
13. PMG/IE FUSING
14. VOLTAGE SENSING FUSING
15. CURRENT SENSING
16. PWM (IVR MODULE CONTROL SIGNAL)
17. 24VDC TERMINAL STRIP
18. CUSTOMER SHORE POWER CONNECTION
19. SPACE HEATER CONTROLS (OPTIONAL)
20. JACKET WATER HEATER CONTROLS (OPTIONAL)
21. GEARBOX COMPONENTS (3516 ONLY) OR 12V COMMON ENCLOSURE BATTERY CHARGER COMPONENTS (C27/C32 ONLY)

COMPONENT LAYOUT – SHEET 1 OF 11
MODULAR CONTROL PANEL/VR SUBPAN
FOR NOTES SEE SHEET 4
CATERPILLAR: CONFIDENTIAL GREEN

NOTE	SPEC NO.	NAME
	1E5167A	INT–PROP
	1E2733	DRAWING – AUTOCAD
	1E0198W	BRAND MARKINGS
	1E0013G	CONFIDENTIALITY
	1E0012A	INTERPRETATION
	1E0011	INTPR & TOL

DRN ARUN GOPAL
CHK LYLE SEWALL
APPD J.D. ELDER
CON-CEPT EXP PRE PROD. PROD.
RECORDS ☒

UNLESS OTHERWISE SPECIFIED DIMENSIONS ARE IN MM [INCHES] DIMENSIONS W/O TOL ARE BASIC

SCALE: NONE
SHEET 7 OF 119
THIRD ANGLE PROJECTION

CHG	DATE
01	23AUG19
00	11JUL18

CATERPILLAR INC.

THE INFORMATION HEREON IS THE PROPERTY OF CATERPILLAR INC. AND/OR ITS SUBSIDIARIES. WITHOUT WRITTEN PERMISSION, ANY COPYING, TRANSMITTAL TO OTHERS, AND ANY USE EXCEPT THAT FOR WHICH IT IS LOANED IS PROHIBITED.

DIAGRAM – WIRING
MODULAR CONTROLS

521–9364 VER – DES SUB ☒ CONTROL W944 D

METRIC 521–9364

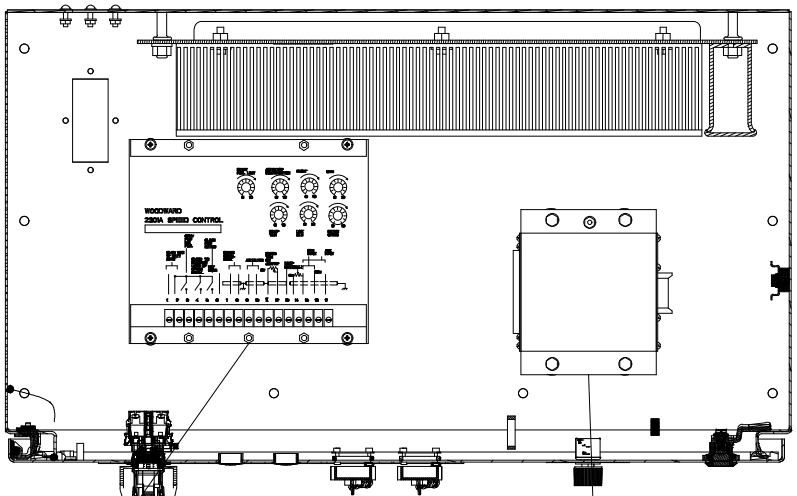

TOP VIEW OF EMCP 4.2B PANEL

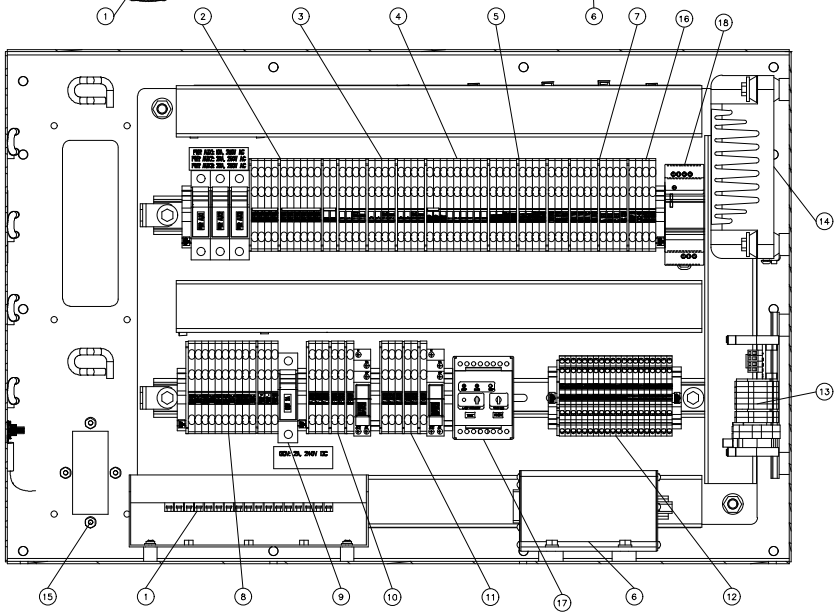

FRONT VIEW OF EMCP 4.2B PANEL (DOOR REMOVED)

1. 2301A GOVERNOR (3500 MUI ONLY)
2. 24VDC TERMINAL STRIP
3. ANALOG INPUTS
4. DIGITAL INPUTS
5. RS485 REMOTE ANNUNCIATOR TERMINAL BOARD POINTS
6. DIO MODULE (OPTIONAL)
7. VOLTAGE AND CURRENT SENSING
8. RELAY OUTPUTS
9. 2301A GOVERNOR DC FUSE (3500 MUI ONLY)
10. CIRCUIT BREAKER 1 CONTROLS (OPTIONAL)
11. CIRCUIT BREAKER 2 CONTROLS (OPTIONAL)
12. DIO MODULE TERMINAL STRIP (OPTIONAL)
13. CAT CONNECT TERMINAL STRIP
14. CAT CONNECT CONTROLLER
15. ENGINE INTERFACE HARNESS CONNECTION
16. CIRCUIT BREAKER INTERFACE TERMINALS
17. GROUND FAULT RELAY (OPTIONAL)
18. 24V TRIP UNIT POWER SUPPLY

LEFT SIDE VIEW OF EMCP 4.2B PANEL

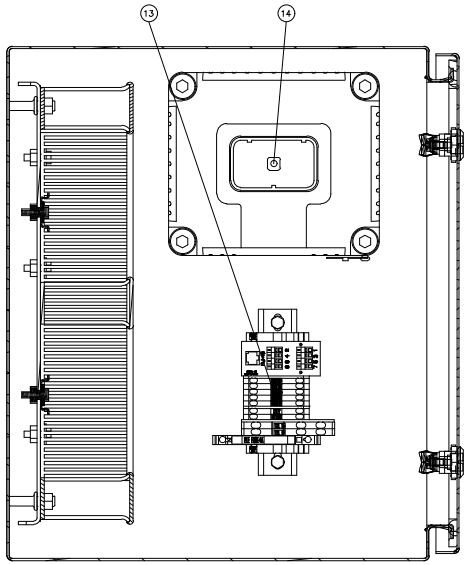

COMPONENT LAYOUT – SHEET 2 OF 11
MODULAR CONTROL PANEL
FOR NOTES SEE SHEET 4
CATERPILLAR: CONFIDENTIAL GREEN

MATL		
HT TR		
	1E5167A	INT–PROP
	1E2733	DRAWING – AUTOCAD
	1E0198W	BRAND MARKINGS
	1E0013G	CONFIDENTIALITY
	1E0012A	INTERPRETATION
NOTE	1E0011	INTPR & TOL
	SPEC NO.	NAME

DRN ARUN GOPAL
CHK LYLE SEWALL
APPD J.D. ELDER
CON-CEPT | EXP | PRE PROD. | PROD.
RECORDS ☒

UNLESS OTHERWISE SPECIFIED
DIMENSIONS ARE IN MM [INCHES]
DIMENSIONS W/O TOL ARE BASIC

SCALE: NONE
0 10mm 20 30
SHEET 8 OF 119
THIRD ANGLE PROJECTION

CHG	DATE
01	23AUG19
00	11JUL18

CATERPILLAR INC.

THE INFORMATION HEREON IS THE PROPERTY OF CATERPILLAR INC. AND/OR ITS SUBSIDIARIES. WITHOUT WRITTEN PERMISSION, ANY COPYING, TRANSMITTAL TO OTHERS, AND ANY USE EXCEPT THAT FOR WHICH IT IS LOANED IS PROHIBITED.

DIAGRAM – WIRING
MODULAR CONTROLS

521–9364 | VER – | DES ☒ SUB | CONTROL W944 | D

METRIC 521-9364

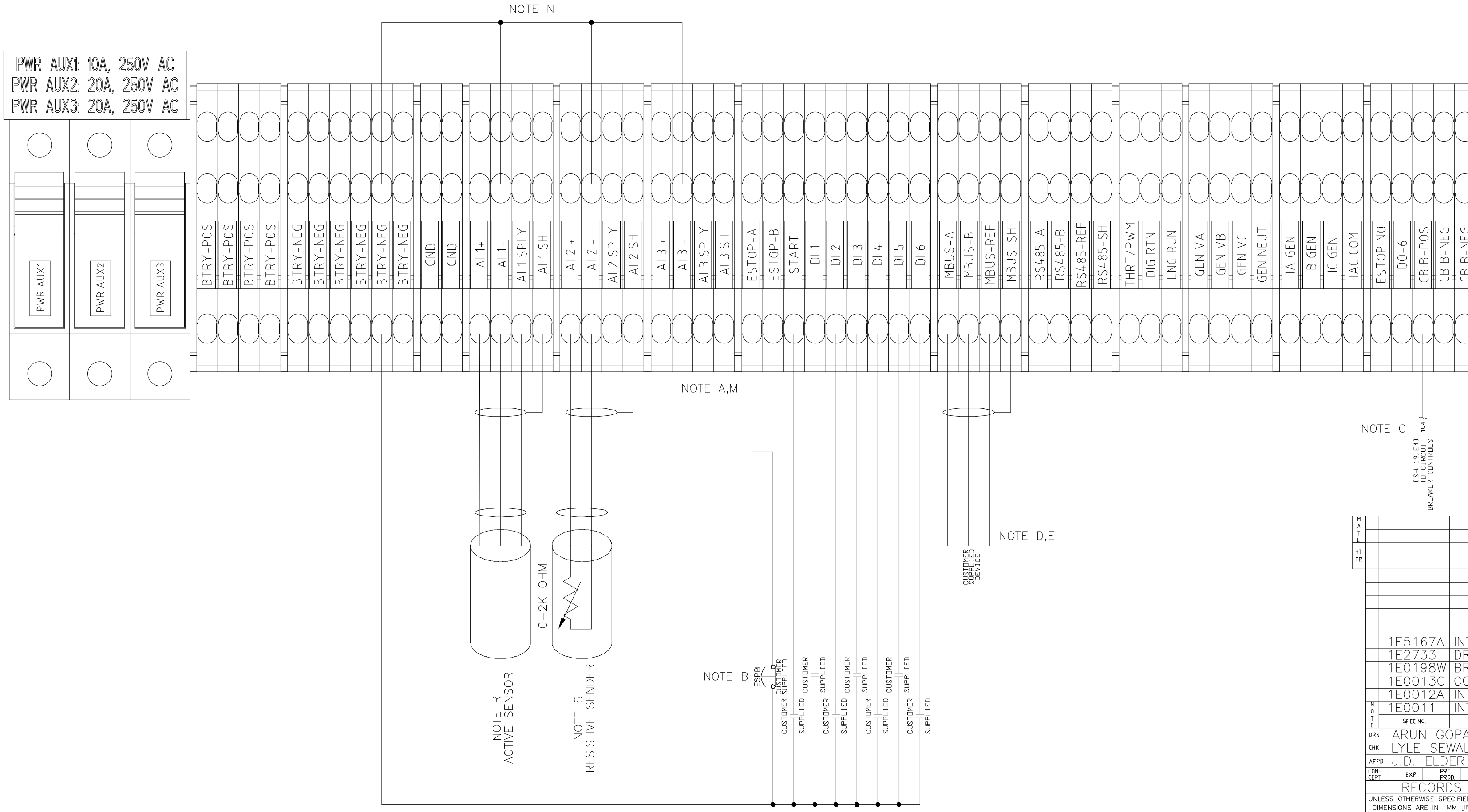

1E5167A	INT-PROP
1E2733	DRAWING - AUTOCAD
1E0198W	BRAND MARKINGS
1E0013G	CONFIDENTIALITY
1E0012A	INTERPRETATION
1E0011	INTPR & TOL
SPEC NO.	NAME

DRN ARUN GOPAL
CHK LYLE SEWALL
APPD J.D. ELDER

CONCEPT | EXP | PRE PROD. | PROD.

RECORDS

UNLESS OTHERWISE SPECIFIED
DIMENSIONS ARE IN MM [INCHES]
DIMENSIONS W/O TOL ARE BASIC

SCALE: NONE
SHEET 18 OF 119
THIRD ANGLE PROJECTION

CHG	DATE
01	23AUG19
00	11JUL18

CUSTOMER INTERCONNECTS SHEET 1 OF 11
EMCP 4.2B, 4.3, 4.4
FOR NOTES SEE SHEET 4
CATERPILLAR: CONFIDENTIAL GREEN

CATERPILLAR INC.

THE INFORMATION HEREON IS THE PROPERTY OF CATERPILLAR INC. AND/OR ITS SUBSIDIARIES. WITHOUT WRITTEN PERMISSION, ANY COPYING, TRANSMITTAL TO OTHERS, AND ANY USE EXCEPT THAT FOR WHICH IT IS LOANED IS PROHIBITED.

DIAGRAM - WIRING
MODULAR CONTROLS

521-9364 | VER - | DES SUB | CONTROL W944 | D

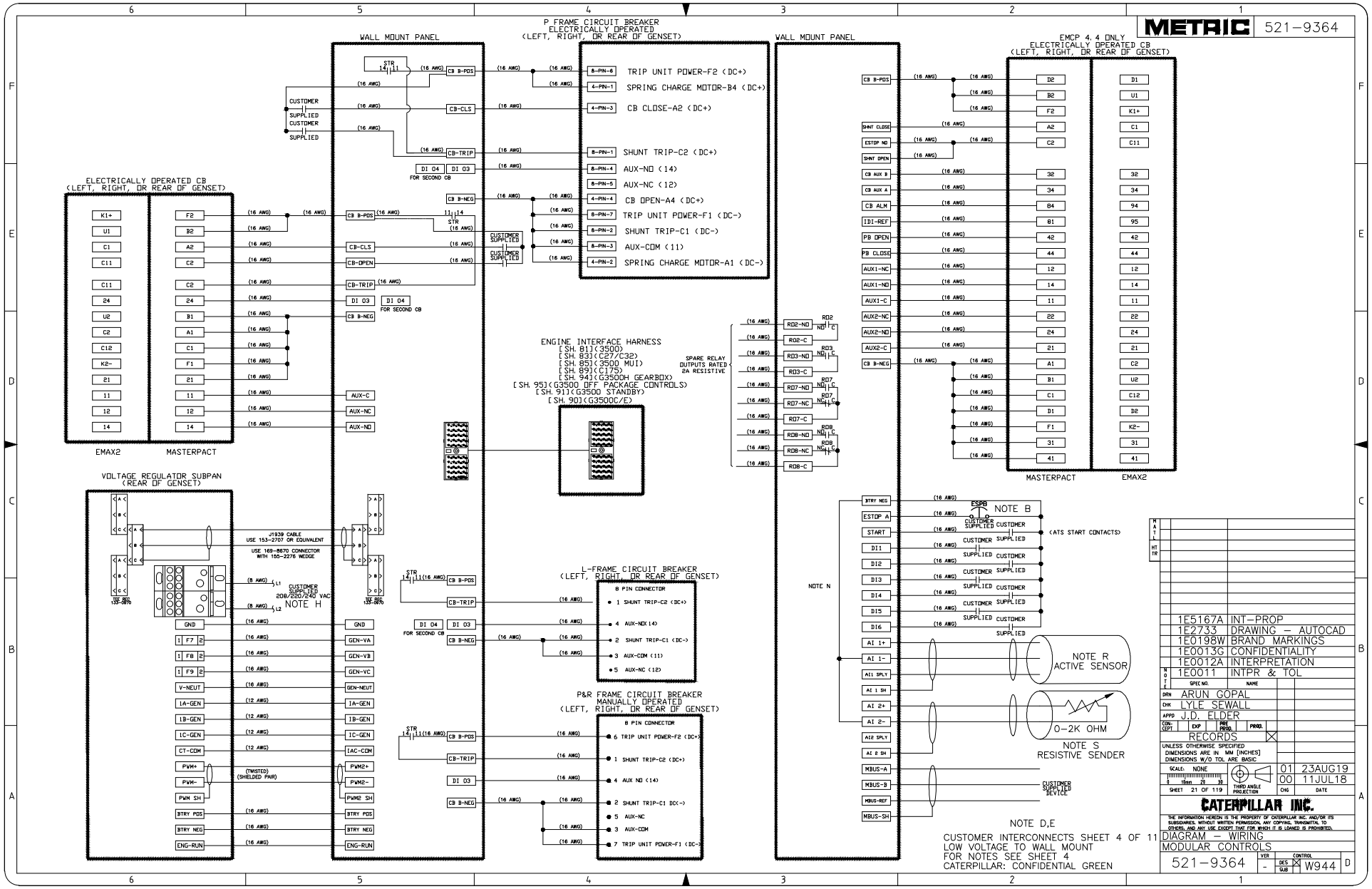
METRIC
521-9364
WALL MOUNT PANEL
P FRAME CIRCUIT BREAKER
ELECTRICALLY OPERATED
(LEFT, RIGHT, OR REAR OF GENSET)
TRIP UNIT POWER-F2 (DC+)
SPRING CHARGE MOTOR-B4 (DC+)
CB CLOSE-A2 (DC+)
SHUNT TRIP-C2 (DC+)
AUX-NO (14)
AUX-NC (12)
CB OPEN-A4 (DC+)
TRIP UNIT POWER-F1 (DC-)
SHUNT TRIP-C1 (DC-)
AUX-COM (11)
SPRING CHARGE MOTOR-A1 (DC-)
ELECTRICALLY OPERATED CB
(LEFT, RIGHT, OR REAR OF GENSET)
EMAX2
MASTERPACT
EMCP 4.4 ONLY
ELECTRICALLY OPERATED CB
(LEFT, RIGHT, OR REAR OF GENSET)
ENGINE INTERFACE HARNESS
[SH. 81](3500)
[SH. 83](C27/C32)
[SH. 85](3500 MUI)
[SH. 89](C175)
[SH. 94](G3500H GEARBOX)
[SH. 95](G3500 OFF PACKAGE CONTROLS)
[SH. 91](G3500 STANDBY)
[SH. 90](G3500C/E)
SPARE RELAY OUTPUTS RATED 2A RESISTIVE
VOLTAGE REGULATOR SUBPAN
(REAR OF GENSET)
J1939 CABLE
USE 153-2707 OR EQUIVALENT
USE 169-8670 CONNECTOR WITH 155-2276 WEDGE
CUSTOMER SUPPLIED 208/220/240 VAC
NOTE H
L-FRAME CIRCUIT BREAKER
(LEFT, RIGHT, OR REAR OF GENSET)
8 PIN CONNECTOR
P&R FRAME CIRCUIT BREAKER
MANUALLY OPERATED
(LEFT, RIGHT, OR REAR OF GENSET)
NOTE B
(ATS START CONTACTS)
NOTE N
NOTE R
ACTIVE SENSOR
0-2K OHM
NOTE S
RESISTIVE SENDER
CUSTOMER SUPPLIED DEVICE
NOTE D,E
CUSTOMER INTERCONNECTS SHEET 4 OF 11
LOW VOLTAGE TO WALL MOUNT
FOR NOTES SEE SHEET 4
CATERPILLAR: CONFIDENTIAL GREEN
1E5167A INT-PROP
1E2733 DRAWING - AUTOCAD
1E0198W BRAND MARKINGS
1E0013G CONFIDENTIALITY
1E0012A INTERPRETATION
1E0011 INTPR & TOL
DRN ARUN GOPAL
CHK LYLE SEWALL
APPD J.D. ELDER
RECORDS
UNLESS OTHERWISE SPECIFIED
DIMENSIONS ARE IN MM [INCHES]
DIMENSIONS W/O TOL ARE BASIC
SCALE: NONE
SHEET 21 OF 119
THIRD ANGLE PROJECTION
01 23AUG19
00 11JUL18
CATERPILLAR INC.
THE INFORMATION HEREON IS THE PROPERTY OF CATERPILLAR INC. AND/OR ITS SUBSIDIARIES. WITHOUT WRITTEN PERMISSION, ANY COPYING, TRANSMITTAL TO OTHERS, AND ANY USE EXCEPT THAT FOR WHICH IT IS LOANED IS PROHIBITED.
DIAGRAM - WIRING
MODULAR CONTROLS
521-9364
W944

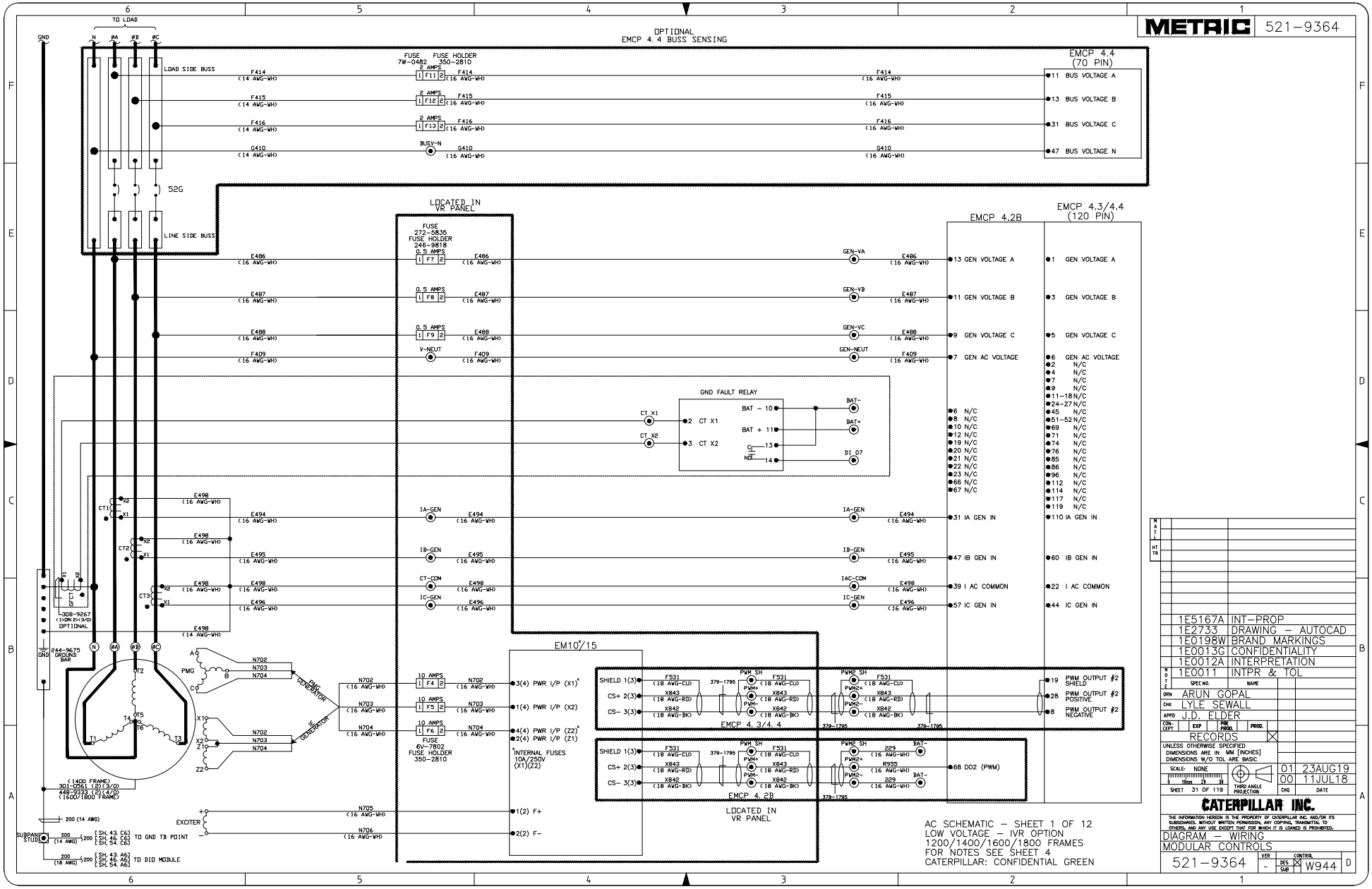
METRIC 521-9364
TO LOAD
GND
N ØA ØB ØC
LOAD SIDE BUSS
52G
LINE SIDE BUSS
OPTIONAL
EMCP 4.4 BUSS SENSING
FUSE 7W-0482 2 AMPS
FUSE HOLDER 350-2810
F414 (14 AWG-WH)
F415 (14 AWG-WH)
F416 (14 AWG-WH)
G410 (14 AWG-WH)
BUSV-N
EMCP 4.4 (70 PIN)
11 BUS VOLTAGE A
13 BUS VOLTAGE B
31 BUS VOLTAGE C
47 BUS VOLTAGE N
LOCATED IN VR PANEL
FUSE 272-5835
FUSE HOLDER 246-9818
0.5 AMPS
E486 (16 AWG-WH)
E487 (16 AWG-WH)
E488 (16 AWG-WH)
F409 (16 AWG-WH)
V-NEUT
GEN-VA
GEN-VB
GEN-VC
GEN-NEUT
EMCP 4.2B
EMCP 4.3/4.4 (120 PIN)
13 GEN VOLTAGE A
11 GEN VOLTAGE B
9 GEN VOLTAGE C
7 GEN AC VOLTAGE
1 GEN VOLTAGE A
3 GEN VOLTAGE B
5 GEN VOLTAGE C
6 GEN AC VOLTAGE
GND FAULT RELAY
BAT - 10
BAT + 11
CT X1
CT X2
BAT-
BAT+
DI 07
E498 (16 AWG-WH)
E494 (16 AWG-WH)
E495 (16 AWG-WH)
E496 (16 AWG-WH)
IA-GEN
IB-GEN
CT-COM
IC-GEN
IAC-COM
31 IA GEN IN
47 IB GEN IN
39 I AC COMMON
57 IC GEN IN
110 IA GEN IN
60 IB GEN IN
22 I AC COMMON
44 IC GEN IN
-308-9267
OPTIONAL
244-9675 GROUND BAR
PMG
PMG GENERATOR
IE GENERATOR
N702
N703
N704
10 AMPS
FUSE 6V-7802
FUSE HOLDER 350-2810
EM10/15
3(4) PWR I/P (X1)*
1(4) PWR I/P (X2)
4(4) PWR I/P (Z2)*
2(4) PWR I/P (Z1)
*INTERNAL FUSES 10A/250V (X1)(Z2)
EMCP 4.3/4.4
SHIELD 1(3)
CS+ 2(3)
CS- 3(3)
PWM SH
PWM+
PWM-
PWM2 SH
PWM2+
PWM2-
19 PWM OUTPUT #2 SHIELD
28 PWM OUTPUT #2 POSITIVE
8 PWM OUTPUT #2 NEGATIVE
EMCP 4.2B
229
R955
BAT-
68 DO2 (PWM)
LOCATED IN VR PANEL
1400 FRAME
301-0561 (2)(3/0)
449-9333 (2)(4/0)
(1600/1800 FRAME)
200 (14 AWG)
SUBPANEL STUD
EXCITER
N705 (16 AWG-WH)
N706 (16 AWG-WH)
1(2) F+
2(2) F-
[SH. 43. C6]
[SH. 46. C6]
[SH. 54. C6]
TO GND TB POINT
[SH. 43. A6]
[SH. 46. A6]
[SH. 54. A6]
TO DIO MODULE
AC SCHEMATIC – SHEET 1 OF 12
LOW VOLTAGE – IVR OPTION
1200/1400/1600/1800 FRAMES
FOR NOTES SEE SHEET 4
CATERPILLAR: CONFIDENTIAL GREEN
1E5167A INT-PROP
1E2733 DRAWING – AUTOCAD
1E0198W BRAND MARKINGS
1E0013G CONFIDENTIALITY
1E0012A INTERPRETATION
1E0011 INTPR & TOL
SPEC NO. NAME
DRN ARUN GOPAL
CHK LYLE SEWALL
APPD J.D. ELDER
CON-CEPT EXP PRE PROD. PROD.
RECORDS
UNLESS OTHERWISE SPECIFIED
DIMENSIONS ARE IN MM [INCHES]
DIMENSIONS W/O TOL ARE BASIC
SCALE: NONE
THIRD ANGLE PROJECTION
01 23AUG19
00 11JUL18
SHEET 31 OF 119
CATERPILLAR INC.
THE INFORMATION HEREON IS THE PROPERTY OF CATERPILLAR INC. AND/OR ITS SUBSIDIARIES. WITHOUT WRITTEN PERMISSION, ANY COPYING, TRANSMITTAL TO OTHERS, AND ANY USE EXCEPT THAT FOR WHICH IT IS LOANED IS PROHIBITED.
DIAGRAM – WIRING
MODULAR CONTROLS
521-9364
VER -
CONTROL DES SUB W944
D

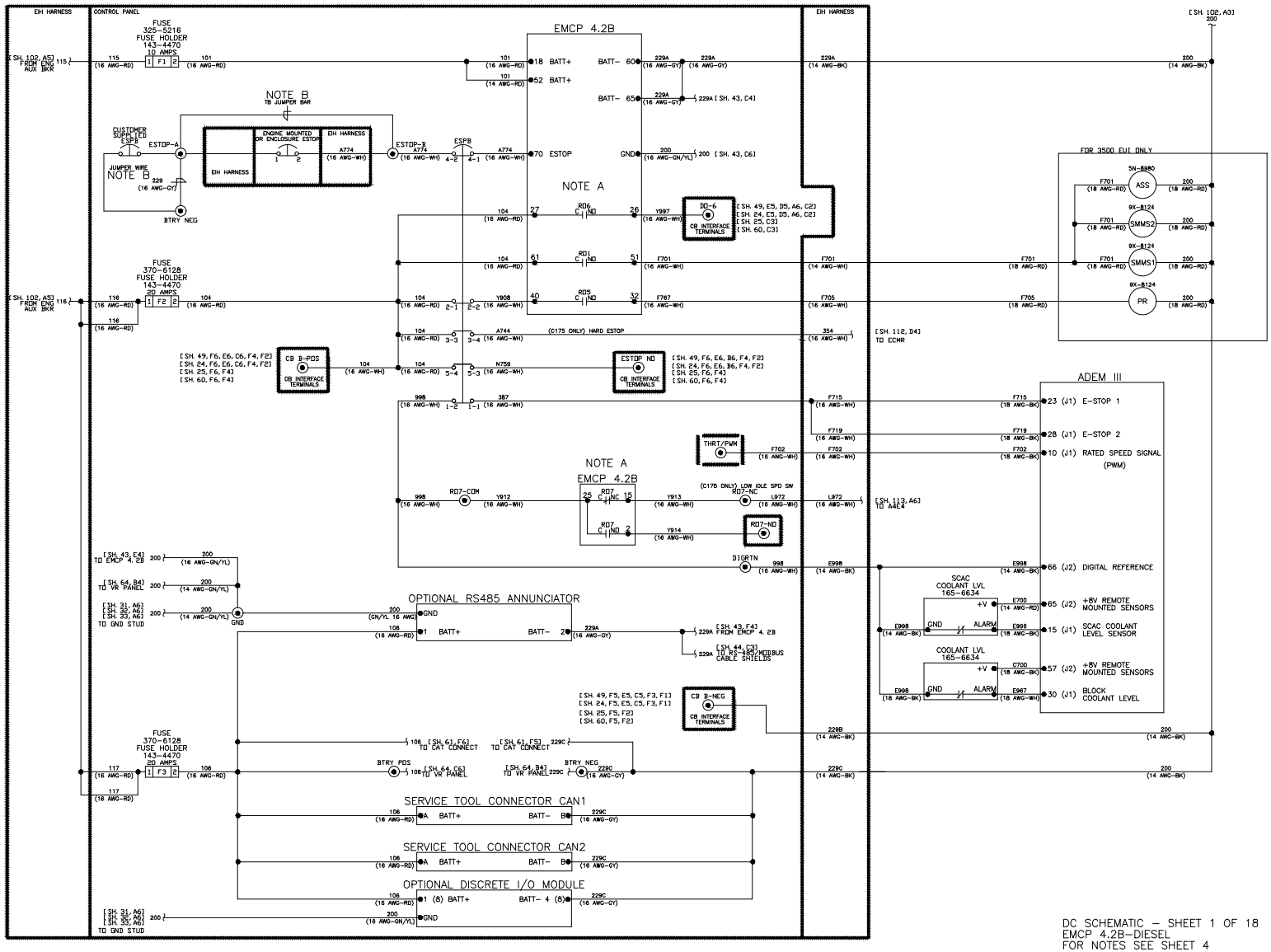

DC SCHEMATIC – SHEET 1 OF 18
EMCP 4.2B–DIESEL
FOR NOTES SEE SHEET 4
CATERPILLAR: CONFIDENTIAL GREEN

METRIC 521-9364

1E5167A	INT–PROP
1E2733	DRAWING – AUTOCAD
1E0198W	BRAND MARKINGS
1E0013G	CONFIDENTIALITY
1E0012A	INTERPRETATION
1E0011	INTPR & TOL

SPEC NO. | NAME

DRN ARUN GOPAL
CHK LYLE SEWALL
APPD J.D. ELDER

CONCEPT | EXP | PRE PROD. | PROD.

RECORDS

UNLESS OTHERWISE SPECIFIED DIMENSIONS ARE IN MM [INCHES] DIMENSIONS W/O TOL ARE BASIC

SCALE: NONE | THIRD ANGLE PROJECTION

CHG	DATE
01	23AUG19
00	11JUL18

SHEET 43 OF 119

CATERPILLAR INC.

THE INFORMATION HEREON IS THE PROPERTY OF CATERPILLAR INC. AND/OR ITS SUBSIDIARIES. WITHOUT WRITTEN PERMISSION, ANY COPYING, TRANSMITTAL TO OTHERS, AND ANY USE EXCEPT THAT FOR WHICH IT IS LOANED IS PROHIBITED.

DIAGRAM – WIRING
MODULAR CONTROLS

521-9364 | VER - | CONTROL DES ☒ SUB W944 | D

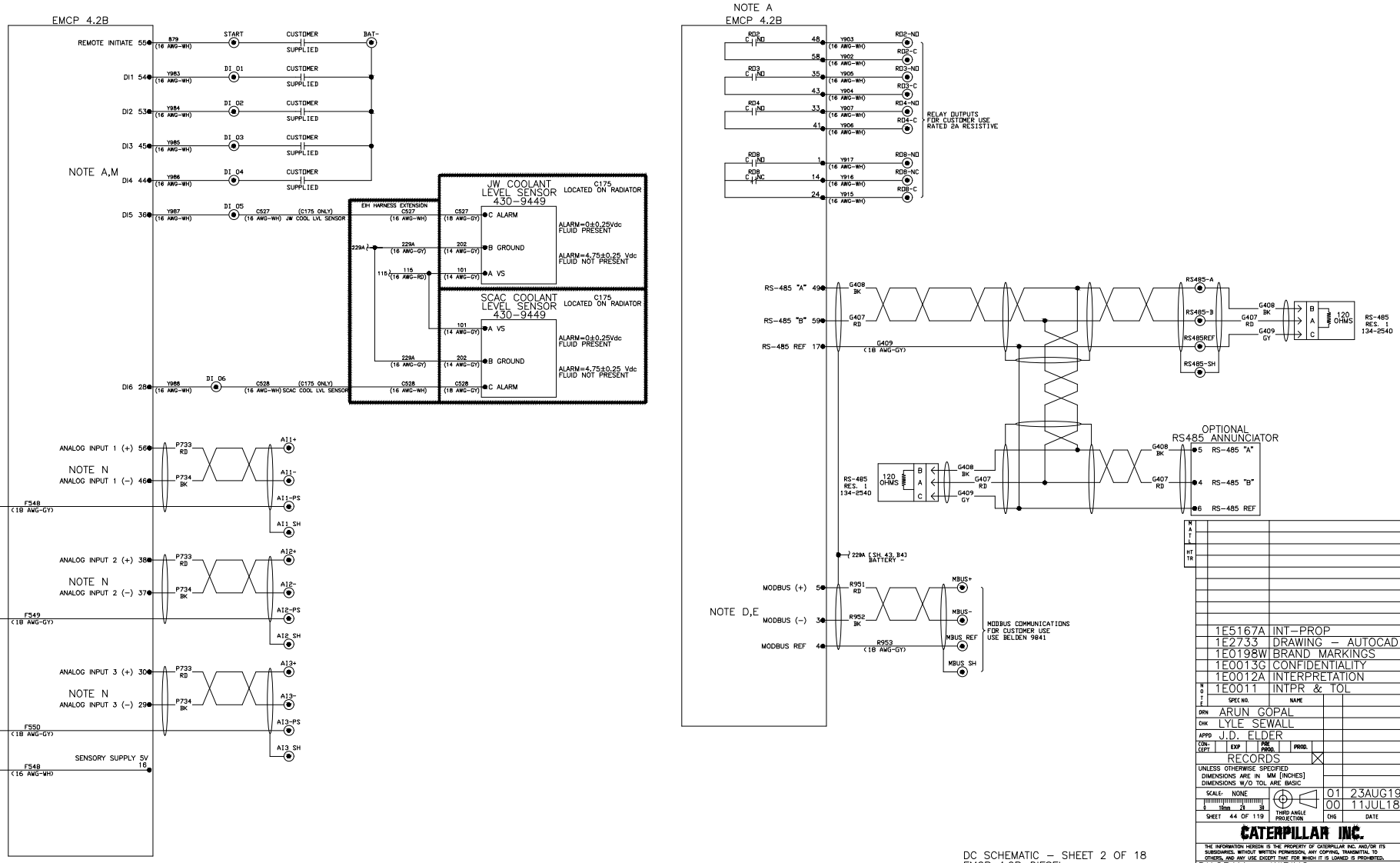

DC SCHEMATIC – SHEET 2 OF 18
EMCP 4.2B–DIESEL
FOR NOTES SEE SHEET 4
CATERPILLAR: CONFIDENTIAL GREEN

METRIC 521–9364

1E5167A	INT–PROP
1E2733	DRAWING – AUTOCAD
1E0198W	BRAND MARKINGS
1E0013G	CONFIDENTIALITY
1E0012A	INTERPRETATION
1E0011	INTPR & TOL

SPEC NO. | NAME

DRN ARUN GOPAL
CHK LYLE SEWALL
APPD J.D. ELDER
CON-CEPT | EXP | PRE PROD. | PROD.
RECORDS

UNLESS OTHERWISE SPECIFIED DIMENSIONS ARE IN MM [INCHES] DIMENSIONS W/O TOL ARE BASIC

SCALE: NONE | THIRD ANGLE PROJECTION | SHEET 44 OF 119

CHG	DATE
01	23AUG19
00	11JUL18

CATERPILLAR INC.

THE INFORMATION HEREON IS THE PROPERTY OF CATERPILLAR INC. AND/OR ITS SUBSIDIARIES. WITHOUT WRITTEN PERMISSION, ANY COPYING, TRANSMITTAL TO OTHERS, AND ANY USE EXCEPT THAT FOR WHICH IT IS LOANED IS PROHIBITED.

DIAGRAM – WIRING
MODULAR CONTROLS

521–9364 | VER - | CONTROL DES SUB W944 | D

METRIC 521-9364

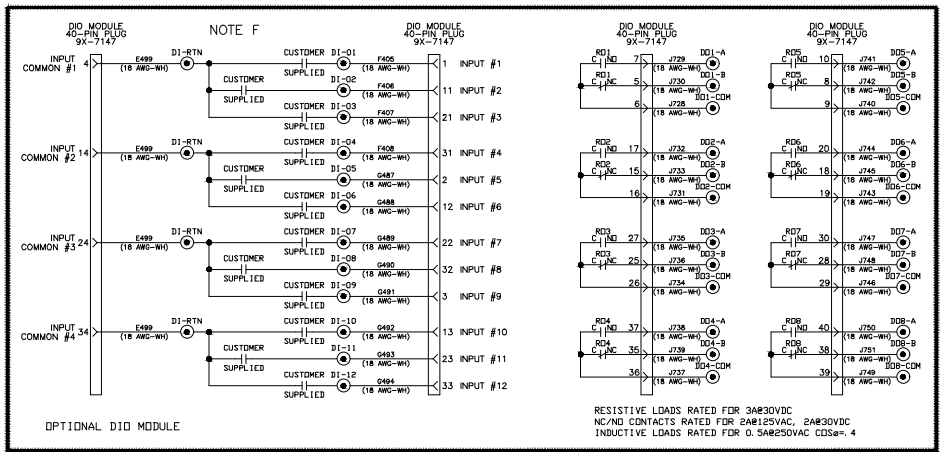

OPTIONAL DIO MODULE

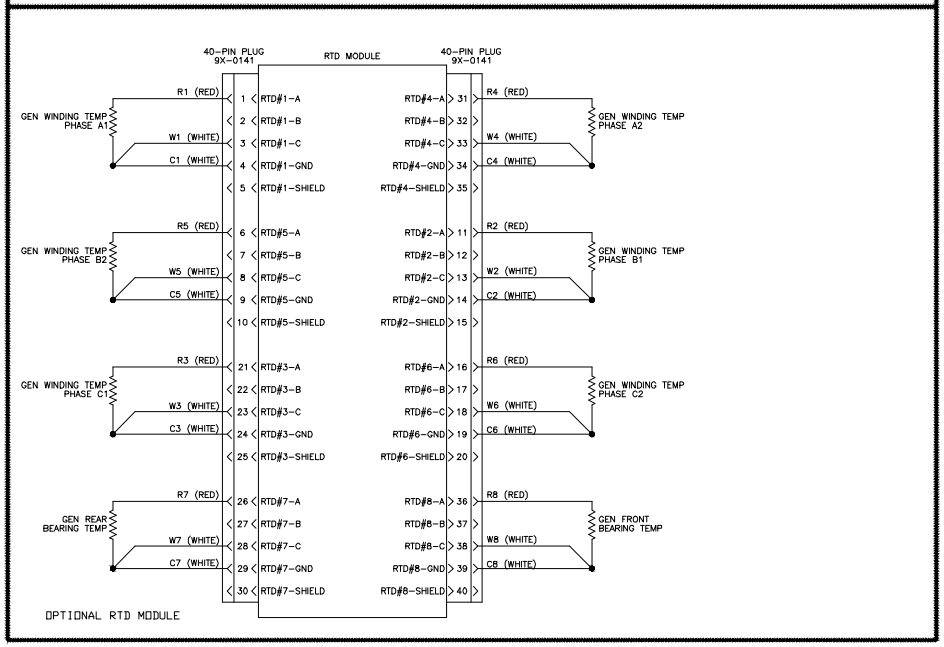

OPTIONAL RTD MODULE

DC SCHEMATIC – SHEET 3 OF 18
EMCP 4.2B–DIESEL
FOR NOTES SEE SHEET 4
CATERPILLAR: CONFIDENTIAL GREEN

	1E5167A	INT–PROP
	1E2733	DRAWING – AUTOCAD
	1E0198W	BRAND MARKINGS
	1E0013G	CONFIDENTIALITY
	1E0012A	INTERPRETATION
NOTE	1E0011	INTPR & TOL

SPEC NO.	NAME
DRN	ARUN GOPAL
CHK	LYLE SEWALL
APPD	J.D. ELDER

CON-CEPT | EXP | PRE PROD. | PROD.

RECORDS

UNLESS OTHERWISE SPECIFIED DIMENSIONS ARE IN MM [INCHES] DIMENSIONS W/O TOL ARE BASIC

SCALE: NONE

THIRD ANGLE PROJECTION

CHG	DATE
01	23AUG19
00	11JUL18

SHEET 45 OF 119

CATERPILLAR INC.

THE INFORMATION HEREON IS THE PROPERTY OF CATERPILLAR INC. AND/OR ITS SUBSIDIARIES. WITHOUT WRITTEN PERMISSION, ANY COPYING, TRANSMITTAL TO OTHERS, AND ANY USE EXCEPT THAT FOR WHICH IT IS LOANED IS PROHIBITED.

DIAGRAM – WIRING
MODULAR CONTROLS

521-9364 | VER - | CONTROL DES ☒ SUB | W944 | D

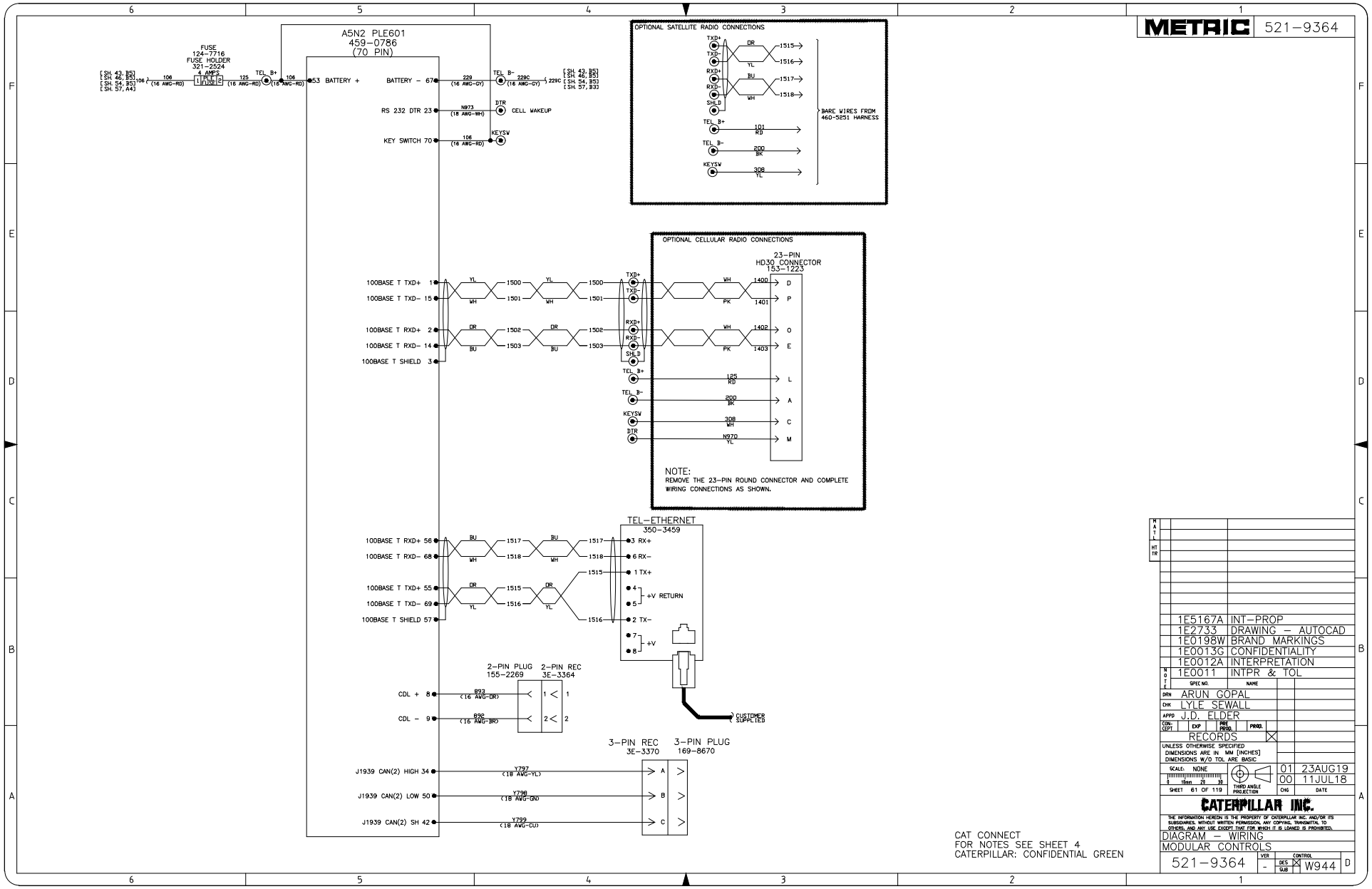
METRIC 521-9364
A5N2 PLE601
459-0786
(70 PIN)
FUSE
124-7716
FUSE HOLDER
321-2524
4 AMPS
FUSE
[SH. 43, B5]
[SH. 46, B5]
[SH. 54, B5]
[SH. 57, A4]
106 (16 AWG-RD)
125 (16 AWG-RD)
TEL B+
106 (16 AWG-RD)
53 BATTERY +
BATTERY - 67
229 (16 AWG-GY)
TEL B-
229C (16 AWG-GY)
229C
[SH. 43, B5]
[SH. 46, B5]
[SH. 54, B5]
[SH. 57, B3]
RS 232 DTR 23
N973 (18 AWG-WH)
DTR
CELL WAKEUP
KEY SWITCH 70
106 (16 AWG-RD)
KEYSW
OPTIONAL SATELLITE RADIO CONNECTIONS
TXD+
TXD-
RXD+
RXD-
SHLD
TEL B+
TEL B-
KEYSW
DR
YL
BU
WH
1515
1516
1517
1518
101 RD
200 BK
308 YL
BARE WIRES FROM
460-5251 HARNESS
OPTIONAL CELLULAR RADIO CONNECTIONS
23-PIN
HD30 CONNECTOR
153-1223
100BASE T TXD+ 1
100BASE T TXD- 15
100BASE T RXD+ 2
100BASE T RXD- 14
100BASE T SHIELD 3
1500
1501
1502
1503
WH
PK
1400
1401
1402
1403
D
P
O
E
125 RD
200 BK
308 WH
N970 YL
L
A
C
M
NOTE:
REMOVE THE 23-PIN ROUND CONNECTOR AND COMPLETE
WIRING CONNECTIONS AS SHOWN.
TEL-ETHERNET
350-3459
100BASE T RXD+ 56
100BASE T RXD- 68
100BASE T TXD+ 55
100BASE T TXD- 69
100BASE T SHIELD 57
1517
1518
1515
1516
3 RX+
6 RX-
1 TX+
2 TX-
+V RETURN
+V
CUSTOMER SUPPLIED
2-PIN PLUG
155-2269
2-PIN REC
3E-3364
CDL + 8
CDL - 9
893 (16 AWG-DR)
898 (16 AWG-BR)
3-PIN REC
3E-3370
3-PIN PLUG
169-8670
J1939 CAN(2) HIGH 34
J1939 CAN(2) LOW 50
J1939 CAN(2) SH 42
Y797 (18 AWG-YL)
Y798 (18 AWG-GN)
Y799 (18 AWG-CU)
CAT CONNECT
FOR NOTES SEE SHEET 4
CATERPILLAR: CONFIDENTIAL GREEN
1E5167A INT-PROP
1E2733 DRAWING - AUTOCAD
1E0198W BRAND MARKINGS
1E0013G CONFIDENTIALITY
1E0012A INTERPRETATION
1E0011 INTPR & TOL
SPEC NO. NAME
DRN ARUN GOPAL
CHK LYLE SEWALL
APPD J.D. ELDER
CONCEPT EXP PRE PROD. PROD.
RECORDS
UNLESS OTHERWISE SPECIFIED
DIMENSIONS ARE IN MM [INCHES]
DIMENSIONS W/O TOL ARE BASIC
SCALE: NONE
SHEET 61 OF 119
THIRD ANGLE PROJECTION
01 23AUG19
00 11JUL18
CHG DATE
CATERPILLAR INC.
THE INFORMATION HEREON IS THE PROPERTY OF CATERPILLAR INC. AND/OR ITS SUBSIDIARIES. WITHOUT WRITTEN PERMISSION, ANY COPYING, TRANSMITTAL TO OTHERS, AND ANY USE EXCEPT THAT FOR WHICH IT IS LOANED IS PROHIBITED.
DIAGRAM - WIRING
MODULAR CONTROLS
521-9364
VER -
CONTROL
DES
SUB
W944
D

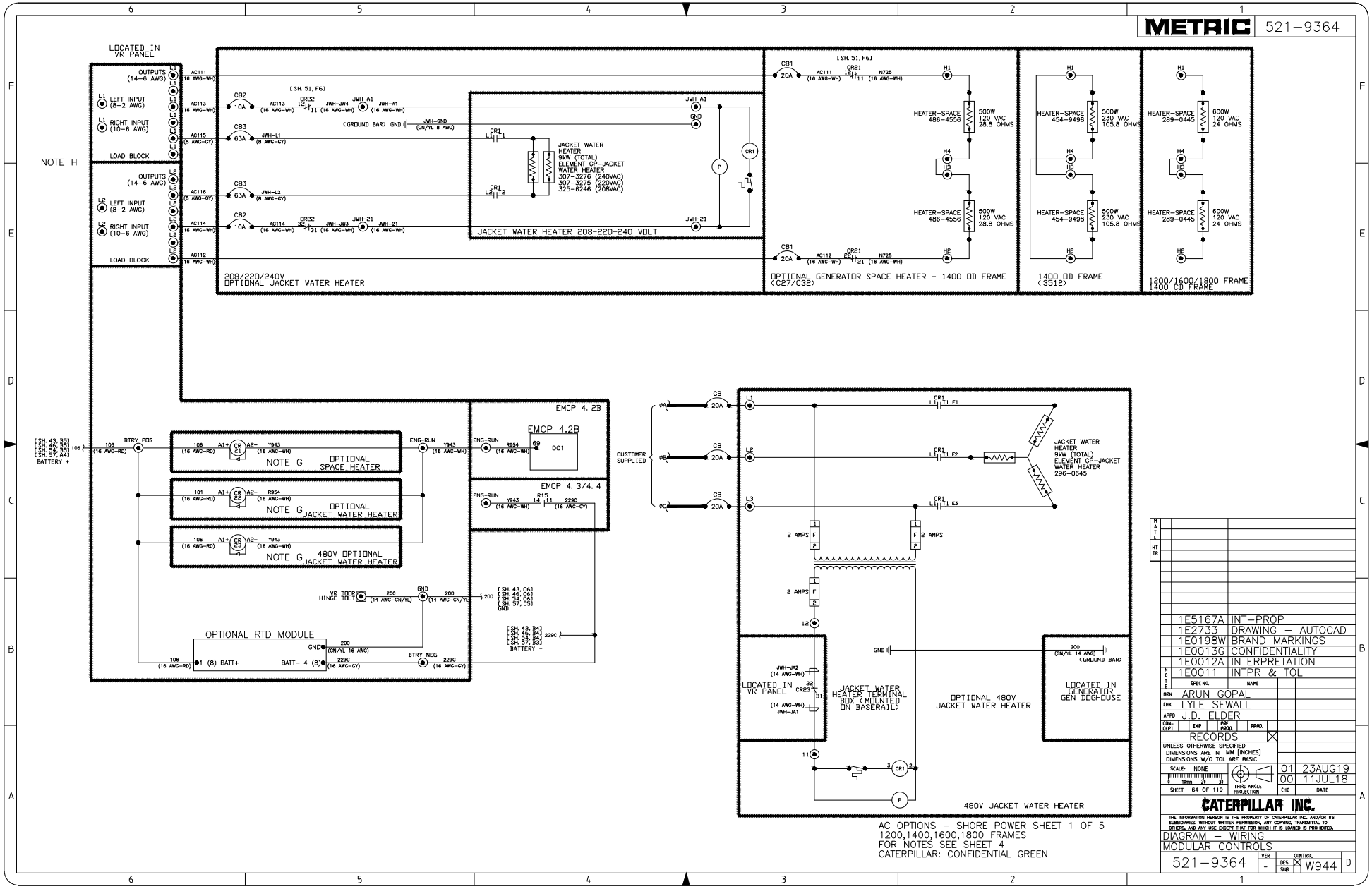
METRIC 521-9364
LOCATED IN VR PANEL
OUTPUTS (14-6 AWG)
LEFT INPUT (8-2 AWG)
RIGHT INPUT (10-6 AWG)
LOAD BLOCK
NOTE H
208/220/240V OPTIONAL JACKET WATER HEATER
JACKET WATER HEATER 208-220-240 VOLT
JACKET WATER HEATER 9kW (TOTAL) ELEMENT GP-JACKET WATER HEATER 307-3276 (240VAC) 307-3275 (220VAC) 325-6246 (208VAC)
OPTIONAL GENERATOR SPACE HEATER - 1400 DD FRAME (C27/C32)
HEATER-SPACE 486-4556 500W 120 VAC 28.8 OHMS
1400 DD FRAME (3512)
HEATER-SPACE 454-9498 500W 230 VAC 105.8 OHMS
1200/1600/1800 FRAME 1400 CD FRAME
HEATER-SPACE 289-0445 600W 120 VAC 24 OHMS
BATTERY +
NOTE G OPTIONAL SPACE HEATER
OPTIONAL JACKET WATER HEATER
480V OPTIONAL JACKET WATER HEATER
EMCP 4.2B
EMCP 4.3/4.4
VR DOOR HINGE BOLT
OPTIONAL RTD MODULE
BATTERY -
CUSTOMER SUPPLIED
JACKET WATER HEATER 9kW (TOTAL) ELEMENT GP-JACKET WATER HEATER 296-0645
LOCATED IN VR PANEL
JACKET WATER HEATER TERMINAL BOX (MOUNTED ON BASERAIL)
OPTIONAL 480V JACKET WATER HEATER
LOCATED IN GENERATOR GEN DOGHOUSE
480V JACKET WATER HEATER
AC OPTIONS - SHORE POWER SHEET 1 OF 5
1200,1400,1600,1800 FRAMES
FOR NOTES SEE SHEET 4
CATERPILLAR: CONFIDENTIAL GREEN
1E5167A INT-PROP
1E2733 DRAWING - AUTOCAD
1E0198W BRAND MARKINGS
1E0013G CONFIDENTIALITY
1E0012A INTERPRETATION
1E0011 INTPR & TOL
SPEC NO. NAME
DRN ARUN GOPAL
CHK LYLE SEWALL
APPD J.D. ELDER
CON-CEPT EXP PRE PROD. PROD.
RECORDS
UNLESS OTHERWISE SPECIFIED DIMENSIONS ARE IN MM [INCHES] DIMENSIONS W/O TOL ARE BASIC
SCALE: NONE
SHEET 64 OF 119
THIRD ANGLE PROJECTION
01 23AUG19
00 11JUL18
CHG DATE
CATERPILLAR INC.
THE INFORMATION HEREON IS THE PROPERTY OF CATERPILLAR INC. AND/OR ITS SUBSIDIARIES. WITHOUT WRITTEN PERMISSION, ANY COPYING, TRANSMITTAL TO OTHERS, AND ANY USE EXCEPT THAT FOR WHICH IT IS LOANED IS PROHIBITED.
DIAGRAM - WIRING
MODULAR CONTROLS
521-9364
VER -
CONTROL DES SUB W944
D

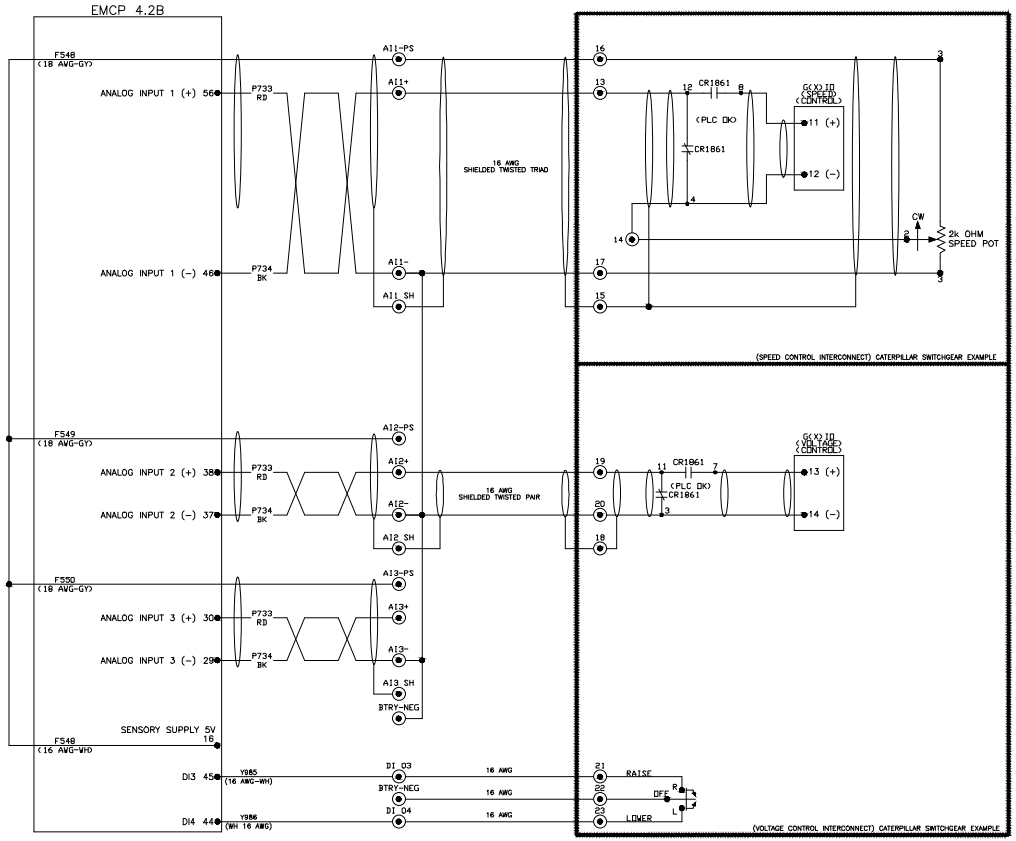

Using an available analog input, configure in ET (AI#1, #2, or #3) or display (#3) an analog input for Desired Engine Speed Command. Program the Analog Input Signal Range for 0 to 5V. The physical range is then mapped to a change in speed using the Minimum Data Range and Maximum Data Range. Keep in mind this value is a bias, so if you desire to change the speed from 1710 rpm to 1890 rpm, values of -90 for Minimum Data Range and +90 for Maximum Data Range would be used. (Based on 1800 RPM = Rated)

Voltage adjustments are categorized into two types: Manual biasing and Analog biasing.
Manual voltage adjustment includes fine tuning the generator output voltage via digital input, EMCP display or SCADA (Modbus). Analog voltage adjustment is performed via programmable analog inputs to the EMCP and provide a voltage control interface for external potentiometers or external control systems (such as switchgear).
It is important to note that the setpoint Gen Maximum Voltage Bias Percentage must be correctly configured to be greater than the expected bias range, otherwise it may not be possible to achieve the required voltage bias. The parameter Gen Maximum Voltage Bias Percentage is accessed within the CAT ET Service Tool configuration menu under Generator AC Monitor, or can be accessed from the EMCP display by navigating to the following sub-menu:

MAIN MENU
CONFIGURE
ALL SETPOINTS
GEN AC MONITOR

Note: All manual voltage biasing is removed and reset to zero when the engine is stopped. Manual voltage bias levels are not carried over to the next start up after an engine shutdown.

Analog voltage adjustment is done via a programmable analog input to the EMCP configured for Generator Voltage Control. Analog inputs provide a voltage control interface for external potentiometers or external control systems (such as switchgear).
The Generator Voltage Control analog input signal is interpreted and converted by the EMCP into a voltage bias percentage of (nominal) rated voltage. For example, consider an analog input configured for a signal range of 0 to +5V and a data range of -10% to 10%. When this analog input signal value equals +3 V, a voltage bias percentage of +2.0 % of rated will be applied to the generator output voltage.

METRIC 521-9364

ANALOG INPUTS

The EMCP 4.1 and 4.2 support three 2-wire (plus shield) Analog Inputs. None of these inputs are dedicated to specific functions. These are individually selectable as either Voltage or Resistive Sender inputs for interface to senders, customer signals, etc. The modes of operation are described below:

- Voltage mode: 0-5 Volts with software-selectable sub-ranges.

The input impedance is a minimum of 10k Ohms and a maximum of 1M Ohms. The Analog Input return signals must be tied to battery negative external to the controller.

Voltage Sender Ranges
0 to 5V
1 to 5V
0.5 to 4.5V

Any Analog Input can be configured for any one of the Data Identification parameters shown below:

- Engine Oil Pres
- Eng Coolant Temp
- Data Link ☐ SCADA (EMCP 4.2 only)
- Engine Oil Temp
- **Engine Speed Control**
- Engine Fuel Level
- **Generator Voltage Control**
- Ext Tank Fuel Level
- Custom Parameters

DIGITAL INPUTS

The EMCP 4.1 and 4.2 have six user-programmable Digital Inputs. The user programmable Digital Inputs are referenced to Battery (-) and will see a change in state at ~3VDC with a 1VDC hysteresis. The Digital Inputs seen on the display that are labeled "A" and "B" are reserved for E-Stop and Remote Start.

The Usage Type of COMMAND/STATUS is used to make certain system conditions be known by the EMCP 4; an example of a Command/Status parameter is:

- Raise Speed
- Lower Speed
- Raise Voltage
- Lower Voltage

Remote voltage adjustment toggle switches may be used to fine tune the generator output voltage by programming an EMCP digital input for Raise Voltage and Lower Voltage. Each activation of the digital input raises or lowers the voltage by 0.2% of rated. When the digital input is activated continuously, the voltage bias is raised or lowered by 0.2% of rated approximately every 400ms.

	1E5167A	INT-PROP
	1E2733	DRAWING - AUTOCAD
	1E0198W	BRAND MARKINGS
	1E0013G	CONFIDENTIALITY
	1E0012A	INTERPRETATION
NOTE	1E0011	INTPR & TOL
	SPEC NO.	NAME

DRN ARUN GOPAL
CHK LYLE SEWALL
APPD J.D. ELDER
CON-CEPT | EXP | PRE PROD. | PROD.
RECORDS
UNLESS OTHERWISE SPECIFIED DIMENSIONS ARE IN MM [INCHES] DIMENSIONS W/O TOL ARE BASIC
SCALE: NONE
0 10mm 20 30
THIRD ANGLE PROJECTION
SHEET 69 OF 119

CHG	DATE
01	23AUG19
00	11JUL18

CATERPILLAR INC.

THE INFORMATION HEREON IS THE PROPERTY OF CATERPILLAR INC. AND/OR ITS SUBSIDIARIES. WITHOUT WRITTEN PERMISSION, ANY COPYING, TRANSMITTAL TO OTHERS, AND ANY USE EXCEPT THAT FOR WHICH IT IS LOANED IS PROHIBITED.

DIAGRAM - WIRING
MODULAR CONTROLS
521-9364 | VER - | CONTROL DES ☒ SUB | W944 | D

SPEED AND VOLTAGE CONTROL
FOR NOTES SEE SHEET 4
CATERPILLAR: CONFIDENTIAL GREEN

METRIC 521-9364

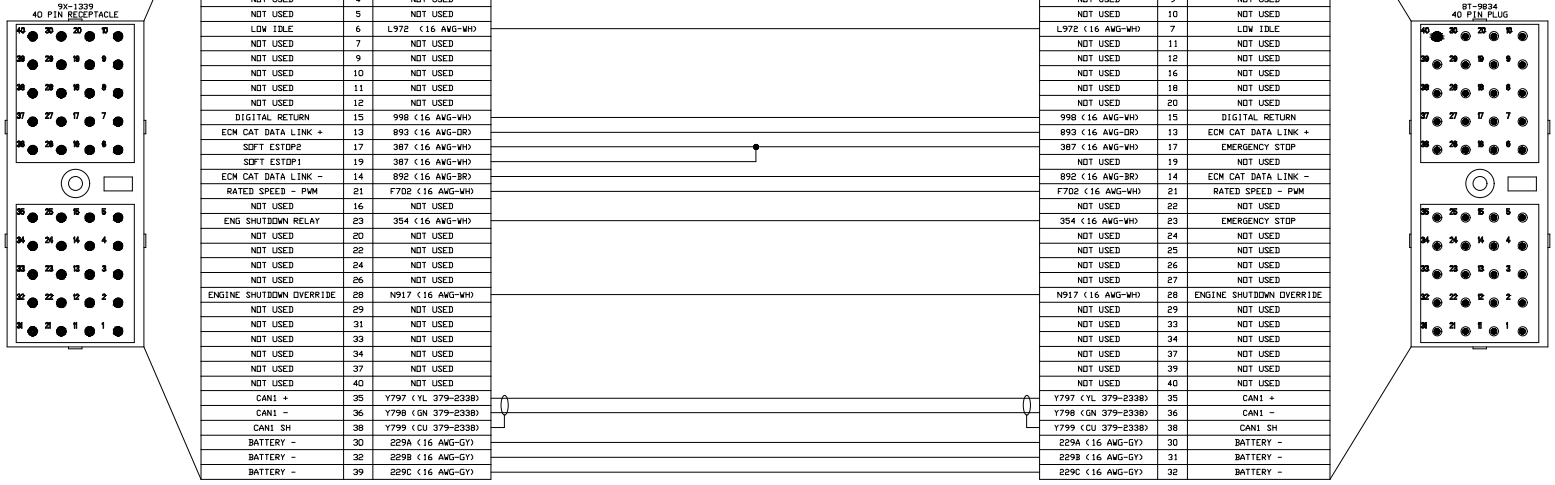

40 PIN RECEPTACLE

DESCRIPTION	PIN#	WIRE # (COLOR AWG)
NOT USED	1	NOT USED
NOT USED	2	NOT USED
NOT USED	3	NOT USED
BATTERY +	25	115 (16 AWG-RD)
BATTERY +	27	116 (16 AWG-RD)
KEY SWITCH	18	116 (16 AWG-RD)
BATTERY +	8	117 (16 AWG-RD)
NOT USED	4	NOT USED
NOT USED	5	NOT USED
LOW IDLE	6	L972 (16 AWG-WH)
NOT USED	7	NOT USED
NOT USED	9	NOT USED
NOT USED	10	NOT USED
NOT USED	11	NOT USED
NOT USED	12	NOT USED
DIGITAL RETURN	15	998 (16 AWG-WH)
ECM CAT DATA LINK +	13	893 (16 AWG-OR)
SOFT ESTOP2	17	387 (16 AWG-WH)
SOFT ESTOP1	19	387 (16 AWG-WH)
ECM CAT DATA LINK -	14	892 (16 AWG-BR)
RATED SPEED - PWM	21	F702 (16 AWG-WH)
NOT USED	16	NOT USED
ENG SHUTDOWN RELAY	23	354 (16 AWG-WH)
NOT USED	20	NOT USED
NOT USED	22	NOT USED
NOT USED	24	NOT USED
NOT USED	26	NOT USED
ENGINE SHUTDOWN OVERRIDE	28	N917 (16 AWG-WH)
NOT USED	29	NOT USED
NOT USED	31	NOT USED
NOT USED	33	NOT USED
NOT USED	34	NOT USED
NOT USED	37	NOT USED
NOT USED	40	NOT USED
CAN1 +	35	Y797 (YL 379-2338)
CAN1 -	36	Y798 (GN 379-2338)
CAN1 SH	38	Y799 (CU 379-2338)
BATTERY -	30	229A (16 AWG-GY)
BATTERY -	32	229B (16 AWG-GY)
BATTERY -	39	229C (16 AWG-GY)

CONNECT TO ENGINE FOR C27/C32

40 PIN PLUG

WIRE # (COLOR AWG)	PIN#	DESCRIPTION
NOT USED	1	NOT USED
NOT USED	2	NOT USED
NOT USED	3	NOT USED
115 (16 AWG-RD)	4	F1 10 AMPS
116 (16 AWG-RD)	5	F2 20 AMPS
NOT USED	8	NOT USED
117 (16 AWG-RD)	6	F3 20 AMPS
NOT USED	9	NOT USED
NOT USED	10	NOT USED
L972 (16 AWG-WH)	7	LOW IDLE
NOT USED	11	NOT USED
NOT USED	12	NOT USED
NOT USED	16	NOT USED
NOT USED	18	NOT USED
NOT USED	20	NOT USED
998 (16 AWG-WH)	15	DIGITAL RETURN
893 (16 AWG-OR)	13	ECM CAT DATA LINK +
387 (16 AWG-WH)	17	EMERGENCY STOP
NOT USED	19	NOT USED
892 (16 AWG-BR)	14	ECM CAT DATA LINK -
F702 (16 AWG-WH)	21	RATED SPEED - PWM
NOT USED	22	NOT USED
354 (16 AWG-WH)	23	EMERGENCY STOP
NOT USED	24	NOT USED
NOT USED	25	NOT USED
NOT USED	26	NOT USED
NOT USED	27	NOT USED
N917 (16 AWG-WH)	28	ENGINE SHUTDOWN OVERRIDE
NOT USED	29	NOT USED
NOT USED	33	NOT USED
NOT USED	34	NOT USED
NOT USED	37	NOT USED
NOT USED	39	NOT USED
NOT USED	40	NOT USED
Y797 (YL 379-2338)	35	CAN1 +
Y798 (GN 379-2338)	36	CAN1 -
Y799 (CU 379-2338)	38	CAN1 SH
229A (16 AWG-GY)	30	BATTERY -
229B (16 AWG-GY)	31	BATTERY -
229C (16 AWG-GY)	32	BATTERY -

CONNECT TO MODULAR CONTROL PANEL

ENGINE INTERFACE HARNESS - SHEET 3 OF 17
ON PACKAGE CONTROLS (C27/C32)
FOR NOTES SEE SHEET 4
CATERPILLAR: CONFIDENTIAL GREEN

	1E5167A	INT-PROP
	1E2733	DRAWING - AUTOCAD
	1E0198W	BRAND MARKINGS
	1E0013G	CONFIDENTIALITY
	1E0012A	INTERPRETATION
NOTE	1E0011	INTPR & TOL
	SPEC NO.	NAME

DRN ARUN GOPAL
CHK LYLE SEWALL
APPD J.D. ELDER
CON-CEPT | EXP | PRE PROD. | PROD.
RECORDS ☒

UNLESS OTHERWISE SPECIFIED
DIMENSIONS ARE IN MM [INCHES]
DIMENSIONS W/O TOL ARE BASIC

SCALE: NONE
0 10mm 24 38
SHEET 82 OF 119
THIRD ANGLE PROJECTION

CHG	DATE
01	23AUG19
00	11JUL18

CATERPILLAR INC.

THE INFORMATION HEREON IS THE PROPERTY OF CATERPILLAR INC. AND/OR ITS SUBSIDIARIES. WITHOUT WRITTEN PERMISSION, ANY COPYING, TRANSMITTAL TO OTHERS, AND ANY USE EXCEPT THAT FOR WHICH IT IS LOANED IS PROHIBITED.

DIAGRAM - WIRING
MODULAR CONTROLS

521-9364 | VER - | CONTROL DES ☒ SUB W944 | D

METRIC 521-9364

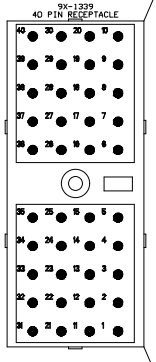

40 PIN RECEPTACLE

DESCRIPTION	PIN#	WIRE # (COLOR AWG)
NOT USED	1	NOT USED
NOT USED	2	NOT USED
NOT USED	3	NOT USED
BATTERY +	25	115 (16 AWG-RD)
BATTERY +	27	116 (16 AWG-RD)
KEY SWITCH	18	116 (16 AWG-WH)
NOT USED	4	NOT USED
NOT USED	5	NOT USED
NOT USED	7	NOT USED
NOT USED	9	NOT USED
NOT USED	10	NOT USED
NOT USED	11	NOT USED
NOT USED	12	NOT USED
NOT USED	16	NOT USED
NOT USED	20	NOT USED
NOT USED	22	NOT USED
NOT USED	24	NOT USED
SOFT ESTOP2	17	387 (16 AWG-WH)
SOFT ESTOP1	19	387 (16 AWG-WH)
NOT USED	29	NOT USED
ENG SHUTDOWN RELAY	23	354 (16 AWG-WH)
NOT USED	31	NOT USED
NOT USED	33	NOT USED
NOT USED	26	NOT USED
NOT USED	34	NOT USED
BATTERY +	8	117 (16 AWG-RD)
DIGITAL RETURN	15	998 (16 AWG-WH)
RATED SPEED - PWM	21	F702 (16 AWG-WH)
LOW IDLE	6	L972 (16 AWG-WH)
ECM CAT DATA LINK +	13	893 (16 AWG-OR)
ECM CAT DATA LINK -	14	892 (16 AWG-BR)
ENGINE SHUTDOWN OVERRIDE	28	N917 (16 AWG-WH)
NOT USED	37	NOT USED
NOT USED	40	NOT USED
CAN1 +	35	Y797 (YL 379-2338)
CAN1 -	36	Y798 (GN 379-2338)
CAN1 SH	38	Y799 (CU 379-2338)
BATTERY -	30	229A (16 AWG-GY)
BATTERY -	32	229B (16 AWG-GY)
BATTERY -	39	229C (16 AWG-GY)

CONNECT TO ENGINE FOR C27/C32

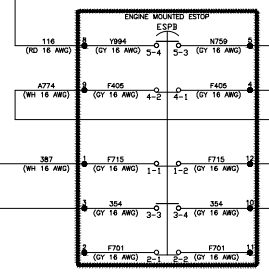

7.5M OR 20M LONG HARNESS
AVAILABLE TO INTERCONNECT FROM
ENGINE TO WALL MOUNT CONTROL PANEL

40 PIN PLUG

WIRE # (COLOR AWG)	PIN#	DESCRIPTION
NOT USED	1	NOT USED
NOT USED	2	NOT USED
NOT USED	3	NOT USED
115 (16 AWG-RD)	4	F1 10 AMPS
116 (16 AWG-RD)	5	F2 20 AMPS
NOT USED	8	NOT USED
NOT USED	9	NOT USED
NOT USED	10	NOT USED
NOT USED	11	NOT USED
N759 (16 AWG-WH)	19	COMMON SHUTDOWN-CB
NOT USED	16	NOT USED
NOT USED	18	NOT USED
A774 (16 AWG-WH)	20	ENCLOSURE ESTOP
NOT USED	22	NOT USED
A774 (16 AWG-WH)	12	ENCLOSURE ESTOP
NOT USED	24	NOT USED
NOT USED	25	NOT USED
387 (16 AWG-WH)	17	EMERGENCY STOP
NOT USED	26	NOT USED
NOT USED	27	NOT USED
354 (16 AWG-WH)	23	EMERGENCY STOP
NOT USED	29	NOT USED
NOT USED	33	NOT USED
NOT USED	34	NOT USED
NOT USED	37	NOT USED
117 (16 AWG-RD)	6	F3 20 AMPS
998 (16 AWG-WH)	15	DIGITAL RETURN
F702 (16 AWG-WH)	21	RATED SPEED - PWM
L972 (16 AWG-WH)	7	LOW IDLE
893(16 AWG-OR)	13	ECM CAT DATA LINK +
892 (16 AWG-BR)	14	ECM CAT DATA LINK -
N917 (16 AWG-WH)	28	ENGINE SHUTDOWN OVERRIDE
NOT USED	39	NOT USED
NOT USED	40	NOT USED
Y797 (YL 379-2338)	35	CAN1 +
Y798 (GN 379-2338)	36	CAN1 -
Y799 (CU 379-2338)	38	CAN1 SH
229A (16 AWG-GY)	30	BATTERY -
229B (16 AWG-GY)	31	BATTERY -
229C (16 AWG-GY)	32	BATTERY -

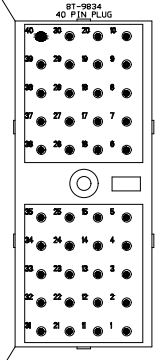

CONNECT TO MODULAR CONTROL PANEL

ENGINE INTERFACE HARNESS - SHEET 4 OF 17
OFF PACKAGE CONTROLS (C27/C32)
FOR NOTES SEE SHEET 4
CATERPILLAR: CONFIDENTIAL GREEN

1E5167A	INT-PROP	
1E2733	DRAWING - AUTOCAD	
1E0198W	BRAND MARKINGS	
1E0013G	CONFIDENTIALITY	
1E0012A	INTERPRETATION	
1E0011	INTPR & TOL	

SPEC NO.	NAME
DRN	ARUN GOPAL
CHK	LYLE SEWALL
APPD	J.D. ELDER

CON-CEPT | EXP | PRE PROD. | PROD.

RECORDS

UNLESS OTHERWISE SPECIFIED
DIMENSIONS ARE IN MM [INCHES]
DIMENSIONS W/O TOL ARE BASIC

SCALE: NONE
0 10mm 24 38
SHEET 83 OF 119
THIRD ANGLE PROJECTION

CHG	DATE
01	23AUG19
00	11JUL18

CATERPILLAR INC.

THE INFORMATION HEREON IS THE PROPERTY OF CATERPILLAR INC. AND/OR ITS SUBSIDIARIES. WITHOUT WRITTEN PERMISSION, ANY COPYING, TRANSMITTAL TO OTHERS, AND ANY USE EXCEPT THAT FOR WHICH IT IS LOANED IS PROHIBITED.

DIAGRAM - WIRING
MODULAR CONTROLS

521-9364 | VER - | CONTROL DES X SUB | W944 | D

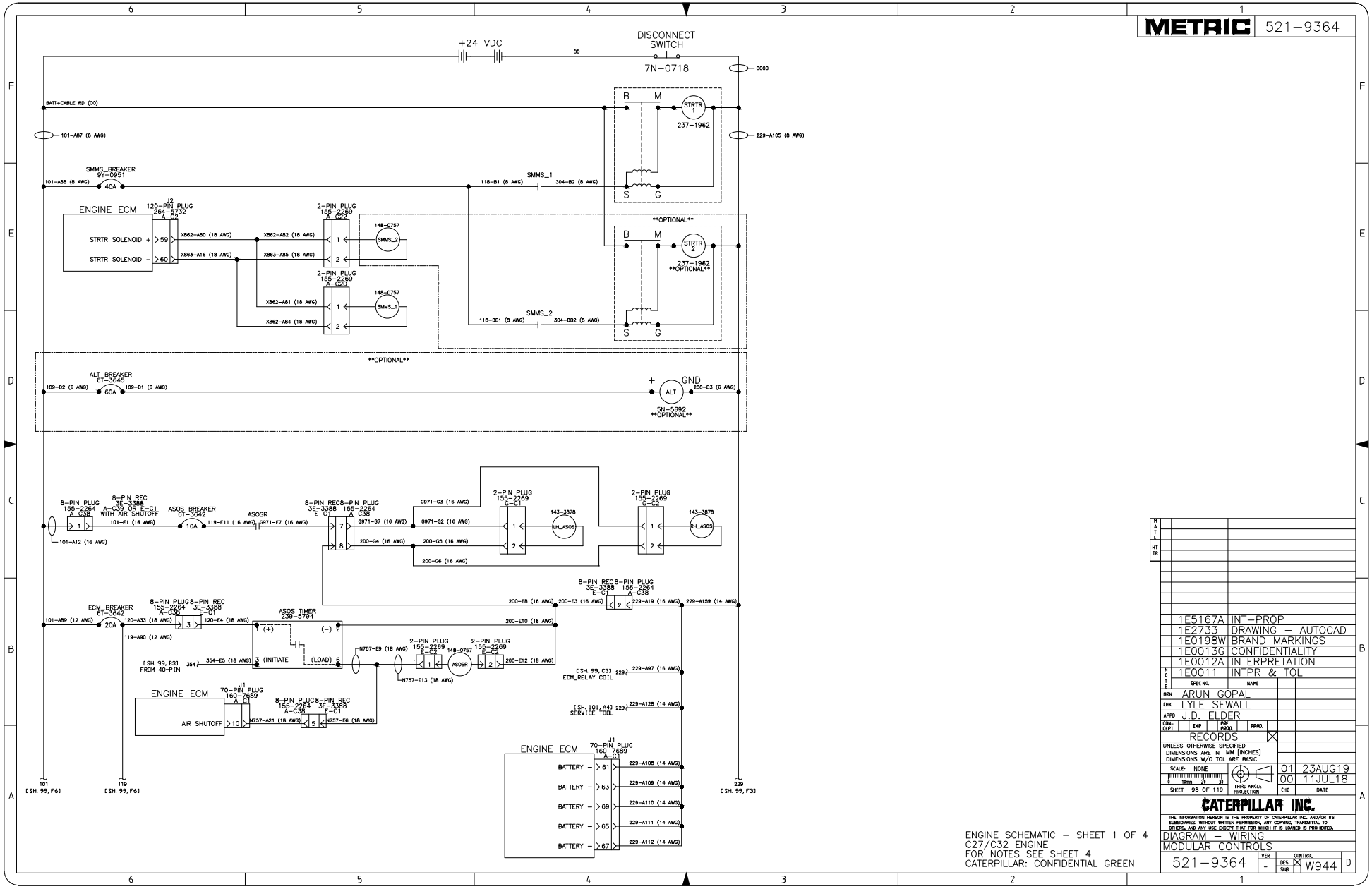

ENGINE SCHEMATIC - SHEET 1 OF 4
C27/C32 ENGINE
FOR NOTES SEE SHEET 4
CATERPILLAR: CONFIDENTIAL GREEN

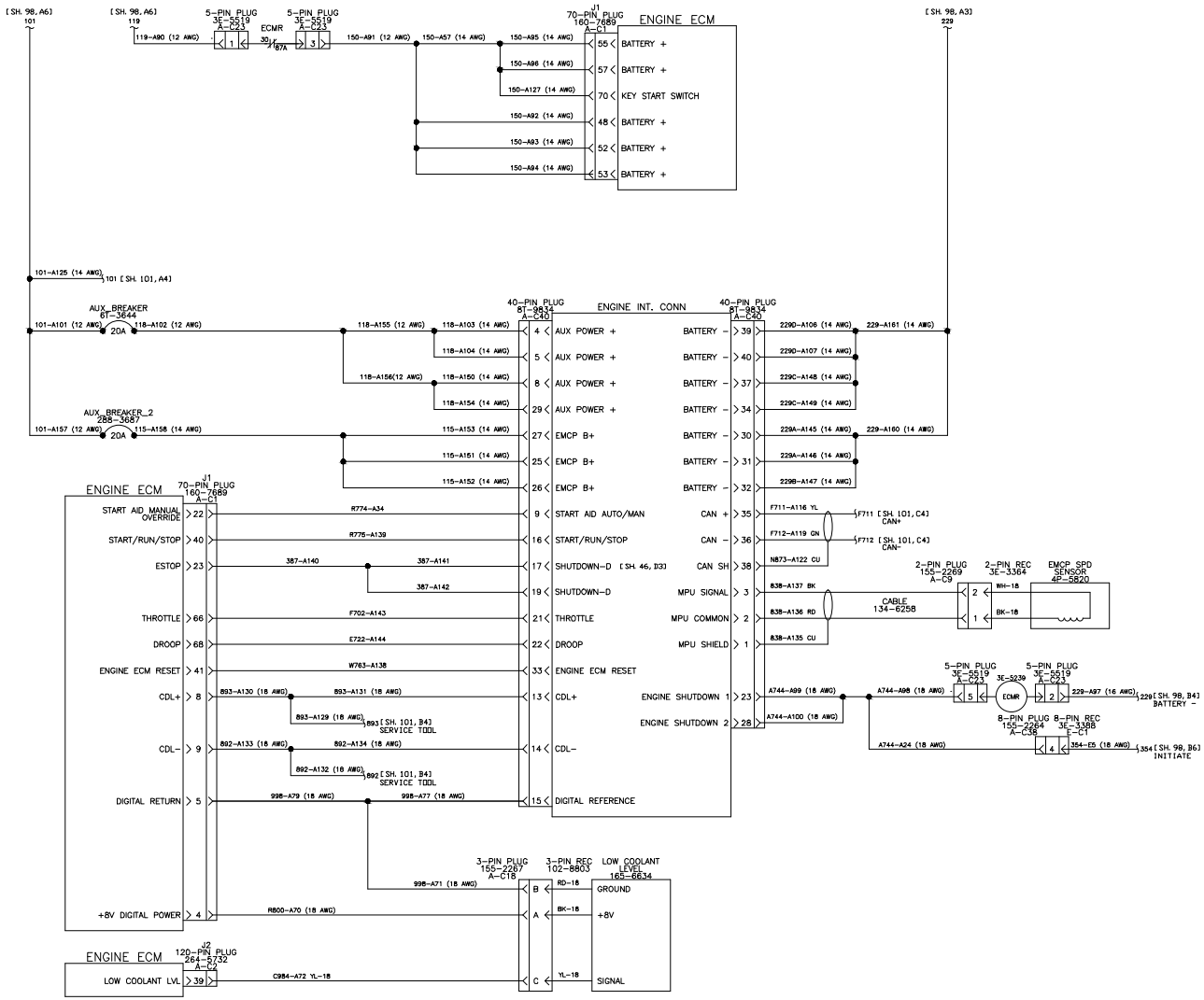

	1E5167A	INT-PROP
	1E2733	DRAWING - AUTOCAD
	1E0198W	BRAND MARKINGS
	1E0013G	CONFIDENTIALITY
	1E0012A	INTERPRETATION
NOTE	1E0011	INTPR & TOL

SPEC NO.	NAME
DRN	ARUN GOPAL
CHK	LYLE SEWALL
APPD	J.D. ELDER

CON-CEPT: EXP | PRE PROD. | PROD.

RECORDS

UNLESS OTHERWISE SPECIFIED DIMENSIONS ARE IN MM [INCHES] DIMENSIONS W/O TOL ARE BASIC

SCALE: NONE — 0 10mm 24 38 — THIRD ANGLE PROJECTION

SHEET 99 OF 119

CHG	DATE
01	23AUG19
00	11JUL18

CATERPILLAR INC.

THE INFORMATION HEREON IS THE PROPERTY OF CATERPILLAR INC. AND/OR ITS SUBSIDIARIES. WITHOUT WRITTEN PERMISSION, ANY COPYING, TRANSMITTAL TO OTHERS, AND ANY USE EXCEPT THAT FOR WHICH IT IS LOANED IS PROHIBITED.

DIAGRAM - WIRING
MODULAR CONTROLS

521-9364 | VER - | CONTROL DES ☒ SUB | W944 | D

ENGINE SCHEMATIC - SHEET 2 OF 4
C27/C32 ENGINE
FOR NOTES SEE SHEET 4
CATERPILLAR: CONFIDENTIAL GREEN

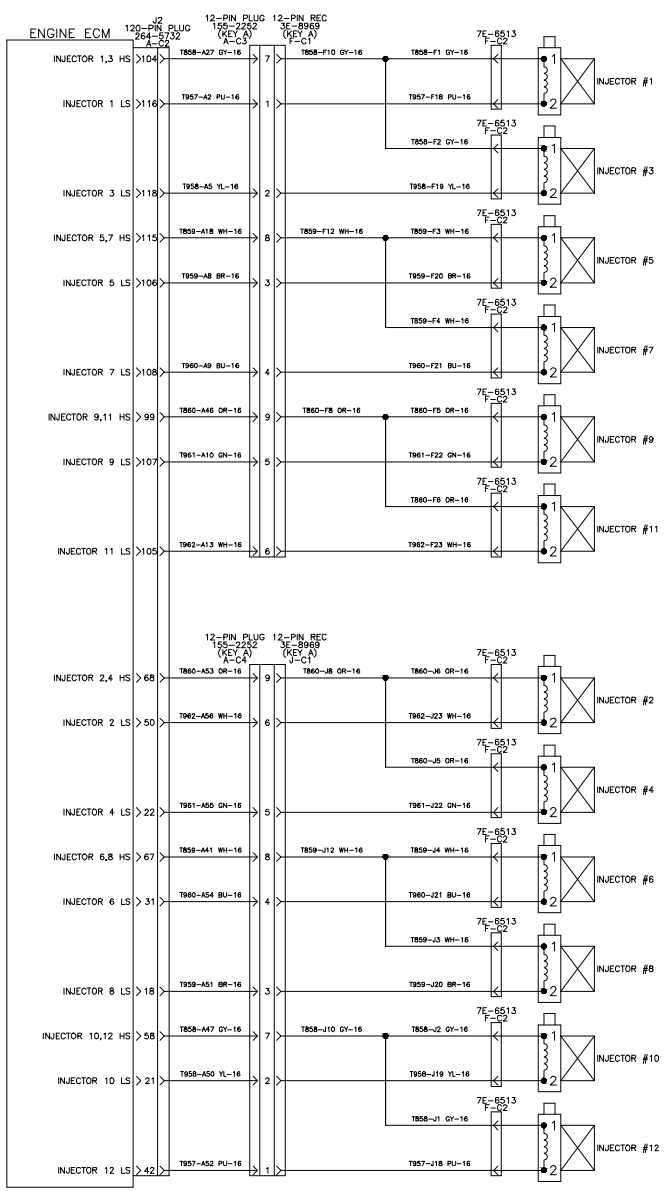

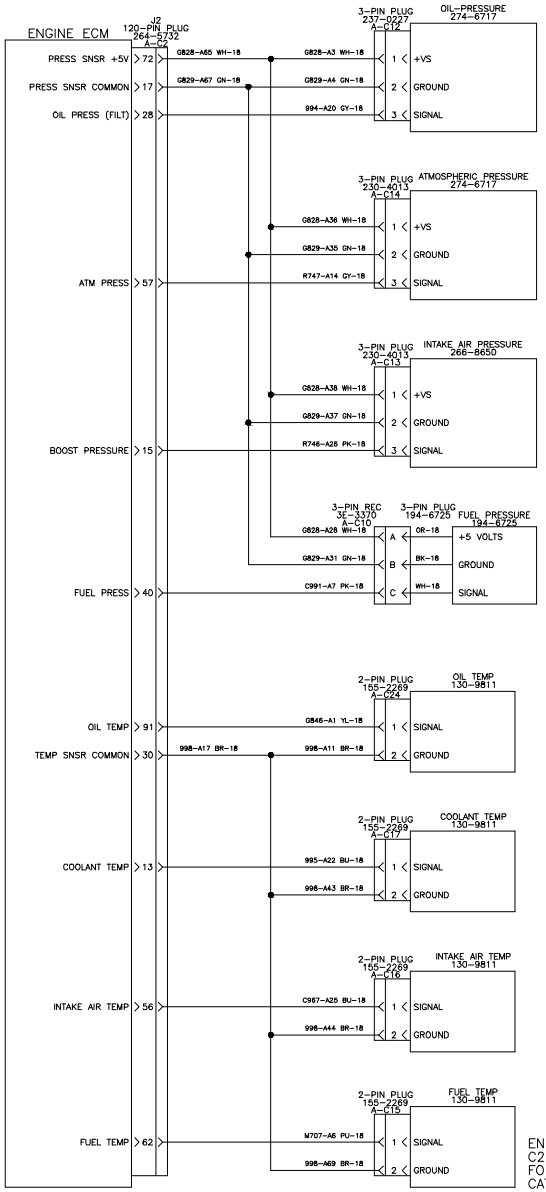

ENGINE SCHEMATIC – SHEET 3 OF 4
C27/C32 ENGINE
FOR NOTES SEE SHEET 4
CATERPILLAR: CONFIDENTIAL GREEN

METRIC 521-9364

	1E5167A	INT-PROP
	1E2733	DRAWING – AUTOCAD
	1E0198W	BRAND MARKINGS
	1E0013G	CONFIDENTIALITY
	1E0012A	INTERPRETATION
NOTE	1E0011	INTPR & TOL

SPEC NO.	NAME
DRN	ARUN GOPAL
CHK	LYLE SEWALL
APPD	J.D. ELDER

CON-CEPT | EXP | PRE PROD. | PROD.

RECORDS ☒

UNLESS OTHERWISE SPECIFIED DIMENSIONS ARE IN MM [INCHES] DIMENSIONS W/O TOL ARE BASIC

SCALE: NONE | THIRD ANGLE PROJECTION | SHEET 100 OF 119

CHG	DATE
01	23AUG19
00	11JUL18

CATERPILLAR INC.

THE INFORMATION HEREON IS THE PROPERTY OF CATERPILLAR INC. AND/OR ITS SUBSIDIARIES. WITHOUT WRITTEN PERMISSION, ANY COPYING, TRANSMITTAL TO OTHERS, AND ANY USE EXCEPT THAT FOR WHICH IT IS LOANED IS PROHIBITED.

DIAGRAM – WIRING
MODULAR CONTROLS

521-9364 | VER - | CONTROL DES ☒ SUB W944 | D

METRIC 521-9364

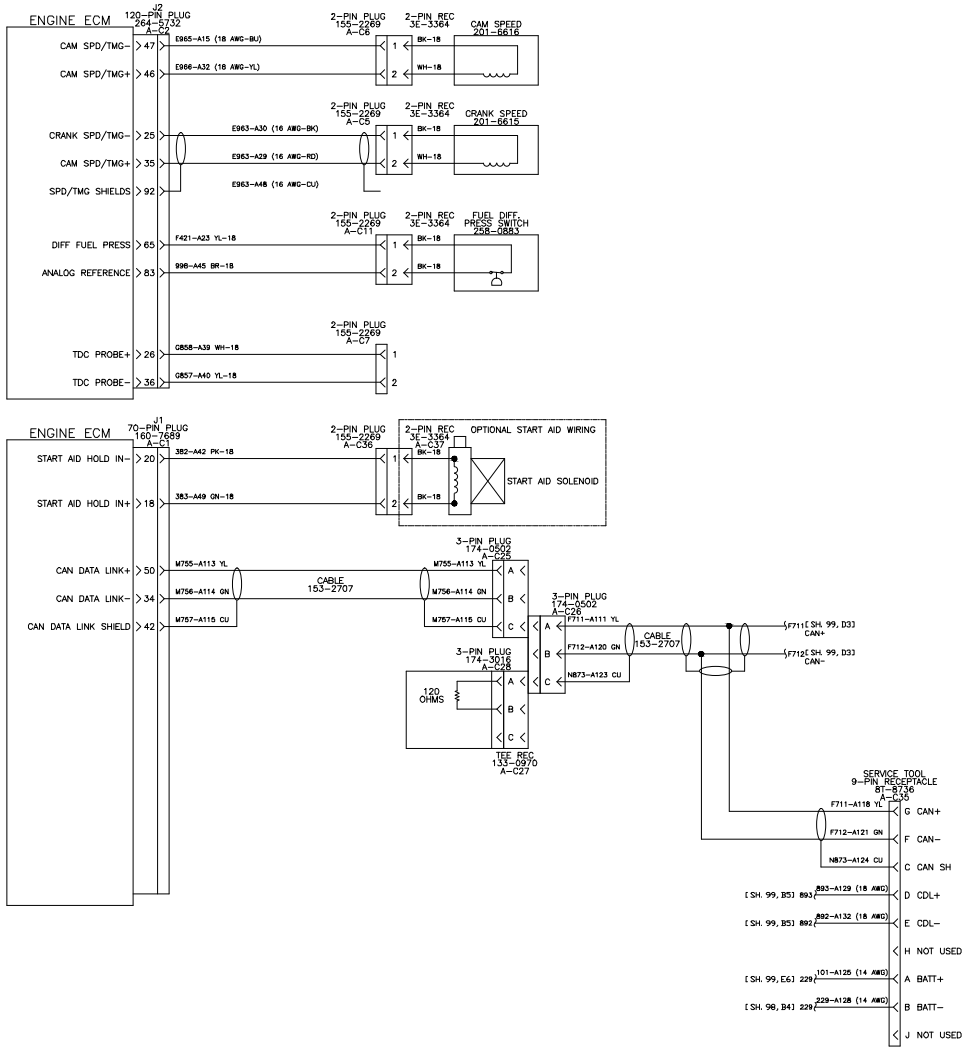

	1E5167A	INT-PROP
	1E2733	DRAWING - AUTOCAD
	1E0198W	BRAND MARKINGS
	1E0013G	CONFIDENTIALITY
	1E0012A	INTERPRETATION
NOTE	1E0011	INTPR & TOL

SPEC NO.	NAME
DRN	ARUN GOPAL
CHK	LYLE SEWALL
APPD	J.D. ELDER

CONCEPT | EXP | PRE PROD. | PROD.

RECORDS

UNLESS OTHERWISE SPECIFIED
DIMENSIONS ARE IN MM [INCHES]
DIMENSIONS W/O TOL ARE BASIC

SCALE: NONE

CHG	DATE
01	23AUG19
00	11JUL18

SHEET 101 OF 119

THIRD ANGLE PROJECTION

CATERPILLAR INC.

THE INFORMATION HEREON IS THE PROPERTY OF CATERPILLAR INC. AND/OR ITS SUBSIDIARIES. WITHOUT WRITTEN PERMISSION, ANY COPYING, TRANSMITTAL TO OTHERS, AND ANY USE EXCEPT THAT FOR WHICH IT IS LOANED IS PROHIBITED.

DIAGRAM - WIRING
MODULAR CONTROLS

521-9364 | VER - | CONTROL DES ☒ SUB | W944 | D

ENGINE SCHEMATIC - SHEET 4 OF 4
C27/C32 ENGINE
FOR NOTES SEE SHEET 4
CATERPILLAR: CONFIDENTIAL GREEN

Cat EMCP / Switchgear Interconnects:

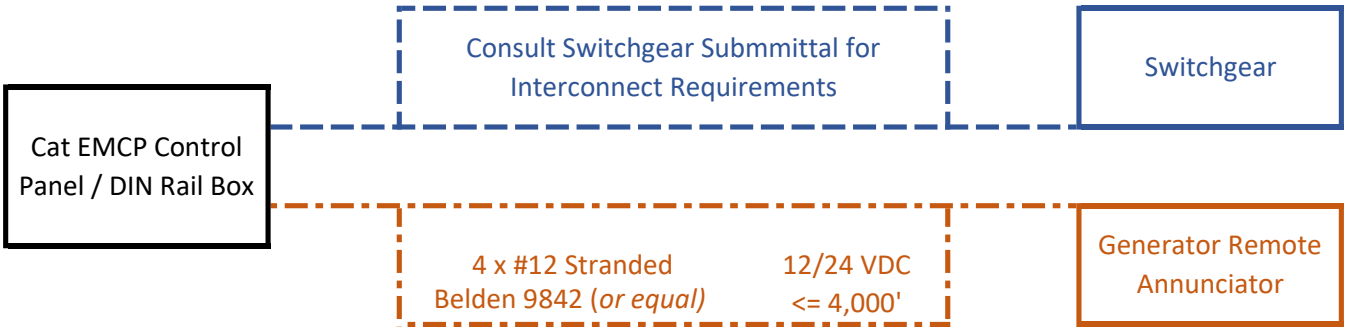

All wiring is low voltage DC (<24V) or RS-485 communications. Control wiring must be seperated from power cables. Control and communications may be run together. Shielded wiring to be a single un-spliced run.

Shore Power Requirements:

<= 200kW	2 x 20A 120VAC, 1ϕ
250kW - 750kW	1 x 30A Circuit 208/240V 1ϕ with Neutral & Ground
800kW - 1250kW	1 x 50A Circuit 208/240V 1ϕ with Neutral & Ground
1500kW +	Varies by job, check with product support or sales rep
All	OPTIONAL: 100A (208/240V) Load Center - *Only if listed in BOM*

CIRCUIT BREAKER

Picture shown may not reflect actual configuration

Molded Case and Insulated Case Circuit Breakers:

C27-C175 North America built packages (50/60Hz)

L-Frame
400A (UL)

P-Frame
800-1200A (UL)

R-Frame
1600-3000A (UL)

NS-Frame
1600-3200A (IEC)

NW-Frame
1200-5000A (UL), 1600-5000A (IEC)

Features

- Moisture and fungus protection
- Clear indication of breaker status
- Reinforced insulation
- Shunt trip
- Auxiliary contacts
- Load side extension bars
- Maintenance-free operation
- Exceptional characteristics under short-circuit conditions
- Adjustable trip settings

NS-Frame

- Federal Specification W-C-375B/GEN
- NEMA AB1
- UTE, VDE, BS, CEI, UNE

Conformity with International Standards

Circuit Breakers have been designed to comply with the international standard IEC 60947-2 as well as these other major standards:

L-Frame
UL 489
CSA 22.2 No 5
Federal Specification W-C-375B/GEN
NEMA AB1
NMX J-266
CCC
CE Marking

P-Frame & R-Frame
UL 489
IEC Standard 60947-2
CSA 22.2 No 5-02
Federal Specification W-C-375B/GEN
NEMA AB1
NMX J-266
UTE, VDE, BS, CEI, UNE

NW-Frame
UL 489
NEMA AB1
CSA 22.2 No. 5096
NMX J-266-ANCE
ANSI C37.13, C37.16, C37.17, C37.50
UL 1066 (cULus Listed)
NEMA SG3

Standard Features

Standards

- UL-CSA
  - L-Frame
  - P-Frame
  - R-Frame
  - NW-Frame
- IEC
  - NS-Frame

Shunt trip

- The shunt trip provides a means of tripping the circuit breaker electronically
- Shunt trip ratings
- Voltage: 24VDC
- Coil Burden (Holding/Inrush): 4.5/200 VA
- Power Consumption: 4.5 VA

Auxiliary contacts

The auxiliary contacts provide a means of remote circuit breaker position indication and consists of (1) Form C Contact (1 Normally open and 1 Normally closed contact) with the following current ratings:
6A @ 240-480 VAC, 50/60Hz

Trip units

All circuit breakers come equipped with True RMS Current Sensing.
The trip units for each of the circuit breaker ratings sample the current waveform to provide true RMS protection through the 15th harmonic. This true RMS sensing gives accurate values for the magnitude of a nonsinusoidal waveform. Therefore, the heating effects of harmonically distorted waveforms are accurately evaluated.
The trip system comes equipped with a set of current transformers (CT's) to sense current, a trip unit to evaluate the current, and a tripping solenoid to trip the circuit breaker.
Additionally, each trip unit comes equipped with Active Thermal Imaging which is active 20 minutes before and after tripping.

Customer cable connections

Connections include bus for installation flexibility.

Optional Features

Electrically-operated Circuit Breakers

Circuit breakers that are electrically-operated come with a two-step stored energy mechanism and come standard with a motor assembly. Motor assemblies provide on and off control from remote locations.
These assemblies contain a spring-charging motor, a shunt trip, and shunt close.
Motor Assembly Voltage Rating: 24-30VDC

Undervoltage trip

Undervoltage trip option trips the circuit breaker when the voltage drops to a value between 35% and 70% of the control voltage.
An attempt to close the circuit breaker when the UV is not energized produces no movement in the main contacts.
Closing is allowed when the supply voltage of the UV trip reaches 85% of the rated voltage.

- Voltage Rating: 24-30VAC/VDC
- Operating Threshold:
  - Opening: 0.35 to 0.7Vn
  - Closing: 0.85 Vn
- Power Consumption: 4.5VA
- Circuit Breaker Response Time at Vn: 50ms +/- 10

Circuit Breakers Table (Continued)

Cat® Part Number	Frame and Rating (Amps)	IEC/UL	No. Poles	Operation	Trip Unit	Circuit Breaker Characteristics	Options	Instantaneous Override (kA RMS) +/- 10%
2449988	1200A P-Frame MCCB	UL	3P	EO	5.0P LSI-P	Table 1	1 Aux Contact, Shunt Trip, Modbus	24
3834673	1200A NW-Frame ICCB	UL	3P	EO	5.0A LSI	Table 7	4 Aux Contacts, Shunt Trip, UV	40
3834674	1200A NW-Frame ICCB	UL	3P	EO	6.0A LSIG	Table 7	4 Aux Contacts, Shunt Trip, UV	40
5858050	1200AP-FrameMCCB	UL	3P	EO	6.0P LSIG-P	Table 1	1 Aux Contact,Shunt Trip,Modbus	24
5858067	1200A P-Frame MCCB	UL	3P	EO	5.0P LSI-P	Table 1	1 Aux Contact, Shunt Trip, Modbus	24
2449764	1250A NS-Frame MCCB	IEC	4P	EO	5.0A LSI	Table 3	1 Aux Contact, Shunt Trip	–
2449765	1250A NS-Frame MCCB	IEC	4P	EO	6.0A LSIG	Table 3	1 Aux Contact, Shunt Trip	–
2449767	1250A NS-Frame MCCB	IEC	4P	EO	6.0P LSIG-P	Table 3	1 Aux Contact, Shunt Trip, Modbus	–
2449772	1600A NS1600 MCCB	IEC	3P	EO	5.0A LSI	Table 3	1 Aux Contact, Shunt Trip	–
2449773	1600A NS1600 MCCB	IEC	3P	EO	6.0A LSIG	Table 3	1 Aux Contact, Shunt Trip	–
2449775	1600A NS1600 MCCB	IEC	3P	EO	6.0P LSIG-P	Table 3	1 Aux Contact, Shunt Trip, Modbus	–
2449776	1600A NS1600 MCCB	IEC	3P	MO	5.0A LSI	Table 4	1 Aux Contact, Shunt Trip	–

Circuit Breakers Characteristics

Model			P-Frame
Number of Poles			3
Rated Current (Amps)			800-2500A (UL)
Voltage Rating (VAC)			600UL/ 690 IEC
Interrupt Rating (UL/CSA) (60Hz) - kA RMS		240V	65
		480V	35
		600V	18
IEC 60947-2 Rating (50/60Hz) - kA RMS	Icu	240V	50
		380/415V	35
	Ics	240V	25
		380/415V	20

Table 1

Model			NS-Frame MO
Number of Poles			3 & 4
Rated Current (Amps)			630-800A (IEC)
Voltage Rating (VAC)			690 (IEC)
IEC 60947-2 Rating (50/60Hz) - kA RMS	Icu	240V	85
		380/415V	50
	Ics	240V	50
		380/415V	50

Table 2

Model			NS-Frame EO
Number of Poles			3 & 4
Rated Current (Amps)			1250-1600A (IEC)
Voltage Rating (VAC)			690 (IEC)
IEC 60947-2 Rating (50/60Hz) - kA RMS	Icu	240V	50
		380/415V	50
	Ics	240V	37
		380/415V	37

Table 3

Model			NS-Frame MO
Number of Poles			3 & 4
Rated Current (Amps)			1600-3200A (IEC)
Voltage Rating (VAC)			690 (IEC)
IEC 60947-2 Rating (50/60Hz) - kA RMS	Icu	240V	85
		380/415V	70
	Ics	240V	65
		380/415V	52

Table 4

Model			NW-Frame
Number of Poles			3 & 4
Rated Current (Amps)			2000A - 4000A (IEC)
Voltage Rating (VAC)			690 IEC
IEC 60947-2 Rating (50/60Hz) -kA RMS		240V	65
		440V	65
		690V	65

Table 5

P, R, NS-Frame Long-Short Trip Curve and NW-Frame Long-Short Trip Curve

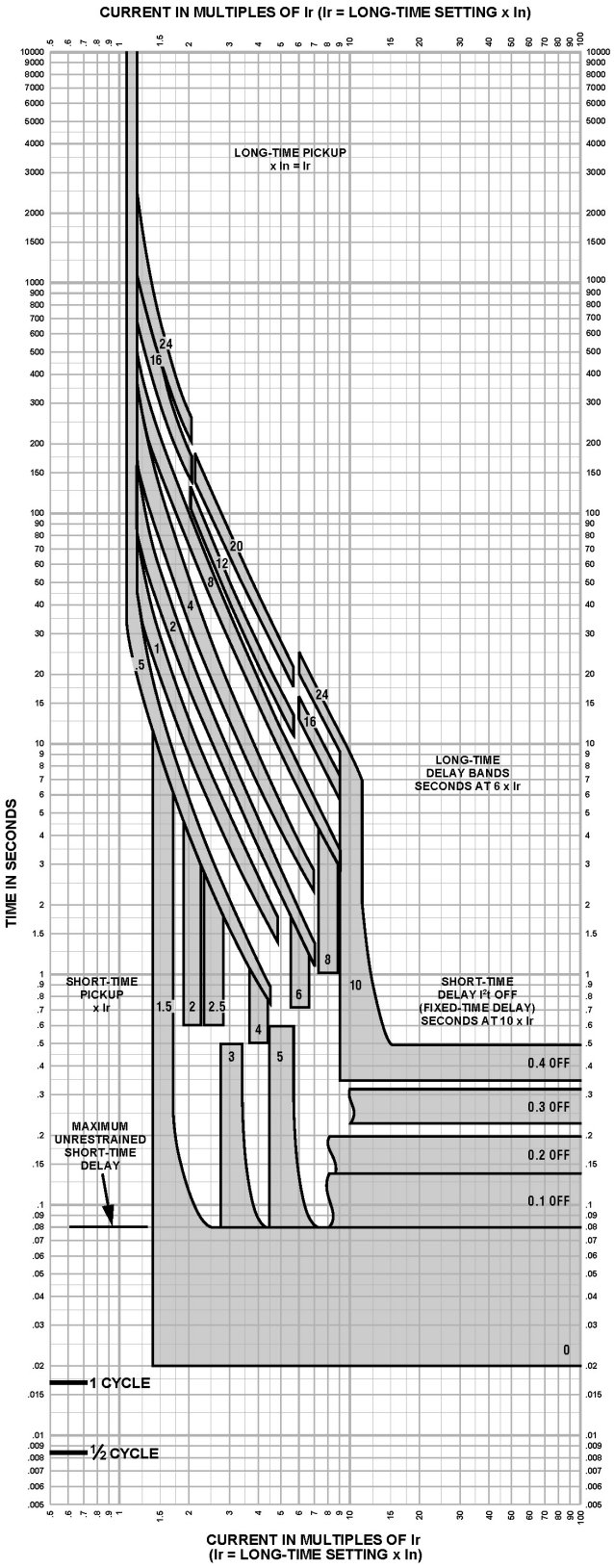

Long-time Pickup and Delay Short-time Pickup and I²t OFF Delay

The time-current curve information is to be used for application and coordination purposes only. Curves apply from -30°C to +60°C ambient temperature.

Notes:

1. There is a thermal-imaging effect that can act to shorten the long-time delay. The thermalimaging effect comes into play if a current above the long-time delay pickup value exists for a time and then is cleared by the tripping of a downstream device or the circuit breaker itself. A subsequent overload will cause the circuit breaker to trip in a shorter time than normal. The amount of time delay reduction is inverse to the amount of time that has elapsed since the previous overload. Approximately 20 minutes is required between overloads to completely reset thermal-imaging.
2. The end of the curve is determined by the interrupting rating of the circuit breaker.
3. With zone-selective interlocking on, short-time delay utilized and no restraining signal, the maximum unrestrained short-time delay time band applies regardless of the setting.
4. Total clearing times shown include the response times of the trip unit, the circuit breaker opening, and the extinction of the current.
5. For a withstand circuit breaker, instantaneous can be turned OFF. See Page 22 for instantaneous trip curve. See tables on pages 03-18 for instantaneous override values..
6. Overload indicator illuminates at 100%.

P, R, NS-Frame Instant Curve and NW-Frame Instant Trip Curve

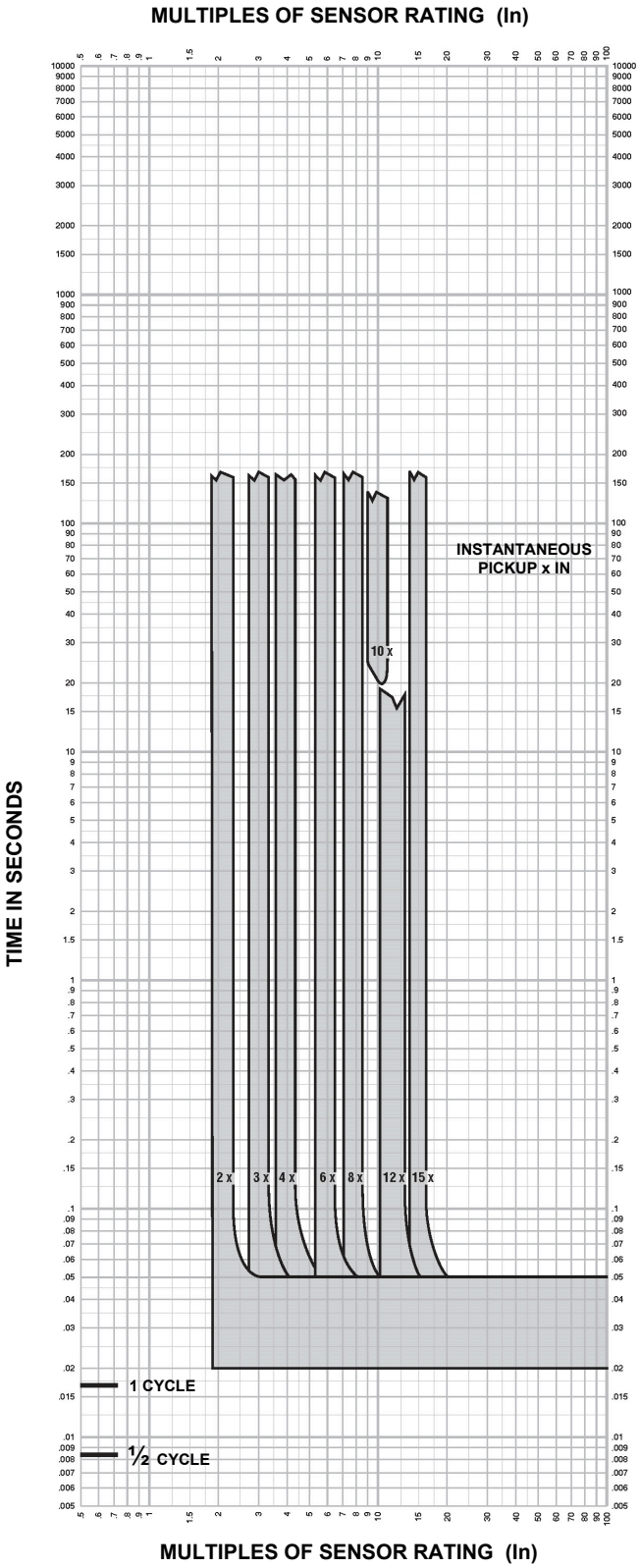

Instantaneous Pickup 2x–15x and OFF

The time-current curve information is to be used for application and coordination purposes only.

Curves apply from -30° to +60°C ambient temperature.

Notes:

1. The end of the curve is determined by the interrupting rating of the circuit breaker.
2. Total clearing times shown include the response times of the trip unit, the circuit breaker opening, and the extinction of the current.
3. The instantaneous region of the trip curve shows maximum total clearing times. Actual clearing times in this region can vary depending on the circuit breaker mechanism design and other factors. The actual clearing time can be considerably faster than indicated. Contact your local Sales Office for additional information.
4. For a withstand circuit breaker, instantaneous can be turned OFF. See tables on pages 03-18 for instantaneous override values.
5. See page 22 for long-time pickup, long-time delay, short-time pickup, and short time delay trip curves.

P, R, NS-Frame Gound Curve and NW-Frame Ground Fault Trip Curve

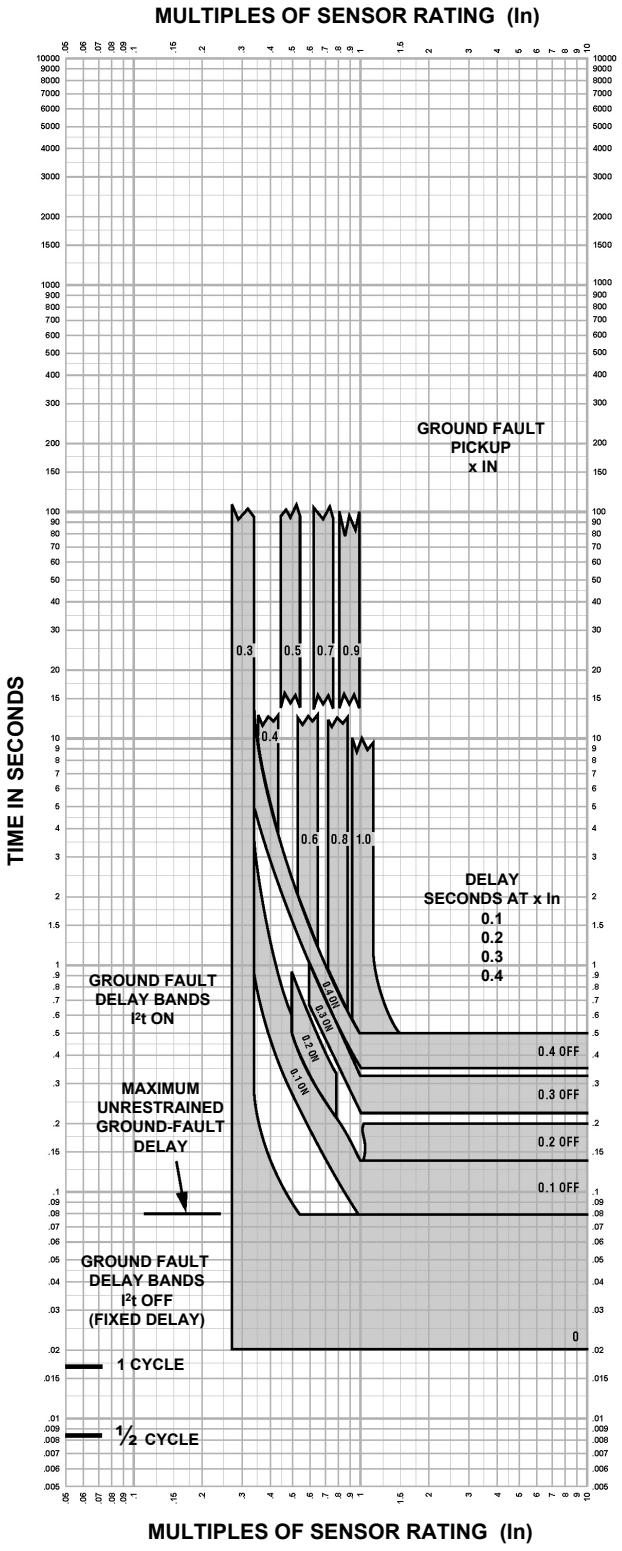

Ground-fault I²t OFF and ON In ≤ 400 A

The time-current curve information is to be used for application and coordination purposes only.

Curves apply from -30°C to +60°C ambient temperature.

Materials and specifications are subject to change without notice.
CAT, CATERPILLAR, LET'S DO THE WORK, their respective logos, "Caterpillar Corporate Yellow", the "Power Edge" and Cat "Modern Hex" trade dress as well as corporate and product identity used herein, are trademarks of Caterpillar and may not be used without permission.

cat.com/electricpower
©2020 Caterpillar
All rights reserved.

ANCILLARY EQUIPMENT

CAT
CATERPILLAR

MAINTENANCE
DO NOT OPEN
RETURN
LEAD
RECYCLE
DO NOT TIP
3-3966
3T-5859
425 CCA at 0°F (-18°C)
Distr. by: Caterpillar Inc.
Peoria, Illinois 61629 USA
Made in USA
CATERPILLAR®
Date Battery Purchased
1 2 3 4 5 J F M A M J
6 7 8 9 0 J A S O N D
Warranty Void if This Tag is Removed or Altered

Cat Battery Specifications

General Information

Premium High Output - Maximum Vibration Resistance

– Vibration Resistance-five times the Industry Standard

– Exclusive “flat top” BCI group 4D & 8D batteries are Maintenance Free and have the industry’s highest cold cranking amps (CCA)

– Popular BCI group 31 Maintenance Free batteries with industry leading cold cranking amps...up to 1000 (CCA), for electric power, machine or on-highway truck and bus applications. Deep cycle models are available for truck, marine and recreational usage

Specifications for Cat Premium High Output Batteries-Available Worldwide

BCI Group Size	Part No.	CCA ≈	RC Mins †	Volts	Amp Hr. Capacity @ 20 Hrs.	Construction Notes	Accessiblity - Fluid Level Check Hours	BCI Overall Dimensions			Nominal Weight		Nominal Acid to Fill Qt (liter)
								Length In (mm)	Width In (mm)	Height In (mm)	Wet Lb (kg)	Dry Lb(kg)	
8D	153-5720	1500	465	12	210	C/MFA	A - 1000	20.5 (520)	10.8 (275)	9.8 (248)	132 (59.9)	-	-
8D	101-4000	1400	400	12	190	LAC+	A - 1000	20.8 (527)	11.0 (278)	9.8 (248)	132 (59.9)	86 (39.0)	18.0 (17.0)
4D	153-5710	1400	425	12	200	C/MFA	A - 1000	20.5 (520)	8.6 (218)	9.8 (248)	119 (54.0)	-	-
4D	9X-9730	1300	400	12	190	LAC+	A - 1000	20.8 (527)	8.6 (218)	9.8 (248)	120 (54.0)	81 (36.8)	14.8 (14.0)
4D	153-5700	1125	305	12	145	C/MFA	A - 1000	20.5 (520)	8.6 (218)	9.8 (248)	101 (45.8)	-	-
4D	9X-9720	1000	275	12	140	LAC+	A - 1000	20.8 (527)	8.6 (218)	9.8 (248)	102 (45.8)	59 (26.8)	15.9 (15.0)
31	175-4390	1000	180	12	90	C/MFA/S	A - 1000	12.9 (329)	6.8 (172)	9.3 (236)	60 (27.2)	-	-
31	175-4370	825	190	12	100	C/MFA/S**	A - 1000	12.9 (329)	6.8 (172)	9.3 (236)	61 (27.2)	-	-
31	175-4360	710	185	12	100	C/MFA/S***	A - 1000	12.9 (329)	6.8 (172)	9.3 (236)	62 (28.1)	-	-
31/30H	115-2422	1000	170	12	90	C/MFA	A - 1000	12.9 (329)	6.8 (172)	9.5 (241)	63 (28.6)	-	-
31/30H	115-2421	950	170	12	90	C/MFA+	A - 1000	12.9 (329)	6.8 (172)	9.5 (241)	64 (29.1)	44 (20.0)	6.6 (6.2)
31/30H	9X-3404[1]	950	165	12	95/100	C/MF	NA	13.0 (331)	6.8 (172)	9.5 (241)	58 (26.3)	-	-
31/30H	3T-5760	750	165	12	95/100	C/MF	AV - 1000	13.0 (331)	6.8 (172)	9.5 (241)	56 (25.4)	-	-
65	230-6368	880	140	12	70	C/MF	NA	11.9 (304)	7.5 (191)	7.5 (191)	46 (20.9)	-	-
24	153-5656	650	110	12	52	C/MF	NA	11.0 (279)	6.9 (174)	9.0 (229)	39 (17.7)	-	-

Construction Notes:

Batteries use SAE taper post design and are shipped wet except as:

LAC = Low Maintenance - Hybrid Construction
C = Calcium Lead Alloy Grid Design
MF = Maintenance Free Non-Accessible
MFA = Maintenance Free Accessible
A = Accessible
NA = Non-Accessible
AV = Accessibily Varies - Accessiblity varies depending on supplier used. If it has caps, it is accessible and fluid levels should be checked.

S = Stud Terminals
+ = Shipped Dry Only
* = Side Terminals Only
** = Starting and Deep Cycle Battery
*** = Deep Cycle and Starting Battery
≈ = Cold Cranking Amps for 30 seconds at 0° F (-18° C)
† = Reserve Capacity Minutes minimum of 25 amp output at 80° F (27° C)
SDT = Dual, Top mounted Terminals - Stud and SAE Post. Marine Deep Cycle/ Starting Battery

Rugged Design-Built Tough-Reliable Starting

– Positive and negative plates are anchored to container bottom and locked at the top of celnelement for maximum vibration resistance.

– Heavy-duty forged terminal post bushings provide maximum strength and resistance to acid seepage.

– Hefty full-frame grids, no sharp edges, optimum acid/paste combination provides better charge acceptance after deep discharge.

– Manifold vented cover with built-in Flame Arrestor...a safety feature that directs corrosive gases away from the battery and holddowns.

– Thick, robust container resists rugged treatment typical of heavy-duty commercial use. Embossed part number & descriptors for easy serviceability.

1 not available in US

Battery Charger

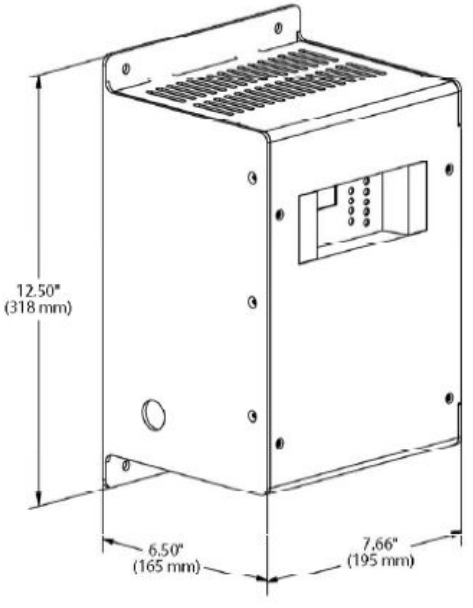

Image Shown may not Reflect Actual Package.

UL 10 Amp

Battery Charger

This battery charger offers accurate, automatic charging of lead-acid and nickel cadmium batteries. The output voltage automatically adjusts to changing input, load, battery and ambient conditions. This prevents battery over-charging and consequent loss of battery electrolyte.

Standard features include AC line compensation, precision voltage regulation, current limiting, automatic 2-rate charging, voltmeter and ammeter, temperature compensation and UL Listing.

The user interface is easy to understand with digital metering, NFPA 110 alarms and a battery fault alarm.

Features

- Electronically current limited at 105% of rated output
- Alarm system
- Digital display
- Lightning and voltage transient protection
- Protection of connected equipment against load dump protection
- Constant voltage, current limited, 4-rate automatic equalization
- IP 20 housing
- Temperature compensation
- On board temperature sensor with remote port
- Auto AC line compensation
- Output regulated by sensed battery voltage

Standards

- C-UL listed to UL 1236
- NFPA 70, NFPA 110
- CSA 22.2 No 107 certified
- CE DOC to EN 60335
- IBC Seismic Certification

Battery Charger

Specifications

Input supply	110 – 120 V 208 – 240 V
AC and DC fuses	2 input and 2 output)
Output voltage	24V
Output amps	10
Frequency	50 / 60 Hz
Operating temperature	-20°C (-4°F) to +60°C (140°F)
Housing constructed of rustproof anodized Aluminum	

Dimensions			
Width	Depth	Height	Weight
195 mm (7.66 in)	165 mm (6.5 in)	318 mm (12.5 in)	10.4 kg (23 lb)

NFPA 110 alarm package as follows:

- AC on Green led (indication)
- AC fail Red led and form C contact (2A)
- Float mode LED
- Fast charge LED
- Temp comp active LED
- Low battery volts Red led and Form C conta
- High Battery Volts Red led and Form C conta
- Charger fail Red led and Form C conta
- Battery fault Red led and Form C conta
- Battery disconnected
- Battery polarity reversed
- Mismatched charger battery voltage
- Open or high resistance charger to battery connection
- Open battery cell or excessive internal resistance

Feature Codes:

BTC1024 BTC1028 BTC1035 BTC1025 BTC1032

Information contained in this publication may be considered confidential. Discretion is recommended when distributing.
Materials and specifications are subject to change without notice.

CAT, CATERPILLAR, LET'S DO THE WORK, their respective logos, "Caterpillar Yellow," the "Power Edge" and Cat "Modern Hex" trade dress as well as corporate and product identity used herein, are trademarks of Caterpillar and may not be used without permission.

©2019 Caterpillar
All rights reserved.
LEHE0141-05 (02/19)

Jacket Water Heater with Pump

Diesel Gensets: C27, C32

Caterpillar offers a factory installed Jacket Water Heater for improved cold-starting capability.

The Jacket Water Heater with the pump is a complete coolant preheater with thermostat, pump and all required controls.

Forced circulation of the coolant delivers uniform heating throughout the entire engine, reduces wear from Cold spots and offers a significant reduction in electrical consumption.

The Jacket Water Heater operates automatically when provided contacts are supplied with a 24 Volt DC signal from the engine.

Features

- Factory Installed
- Complete with hoses, thermostat and pump
- Base frame mounting minimizes engine induced vibration
- Automatically disconnected when engine isrunning via the generator space heater relay
- Supplied with UL recognized components
- Thermostat is factory pre-set to 54°C (130°F)

Heater Design Description

The jacket water heater package is designed to efficiently pre-heat the engine by heating and circulating the engine's coolant.

This design results in the following benefits

- Increase life of heater hoses, engine seals, and heating elements.
- Improve heat transfer efficiency from elements to engine coolant.
- More uniform engine temperature distribution
- Application of a thermostat with a reduced thermal differential.
- Lower customer utility costs and increased heater reliability.
- Heater thermostat's setpoint is preset from the factory

Heater Operation / Wiring

A 32 L/pm (10 gpm) pump is located at the heater outlet to push the coolant through the heater. A fixed thermostat is located inside the heater tank near the outlet of the heater and responds to the temperature of the coolant entering the tank. The figure below shows the general heater design.

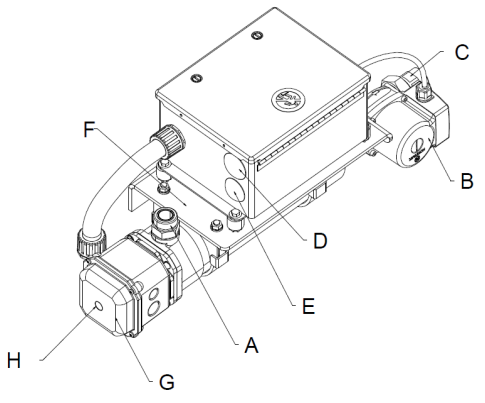

A. Discharge port

B. pump / motor

C. Suction (behind unit)

D. Power in writing entrance

E. Control wiring entrance

F. Mounting Base

G. Element assembly

H. Termostat

Specifications

	Voltage	
	240	**220**
Ratings	9 kW	9 kW
Frequency	60	50
Phase	Single	Single
Amps	37.5A	41A
Flow Rate	38 L/pm(10 GPM)	38 L/pm(10 GPM)
Pump Rating	240 VAC 97W	220VAC 90W
Fixed Thermostat	38°C - 54°C (100°F - 130°F)	
Length	694.8 mm (27.3")	
Width	213.7 mm (8.4")	
Height	290.6 mm (11.4")	
Weight	18.84 Kg (41.54 lbs)	

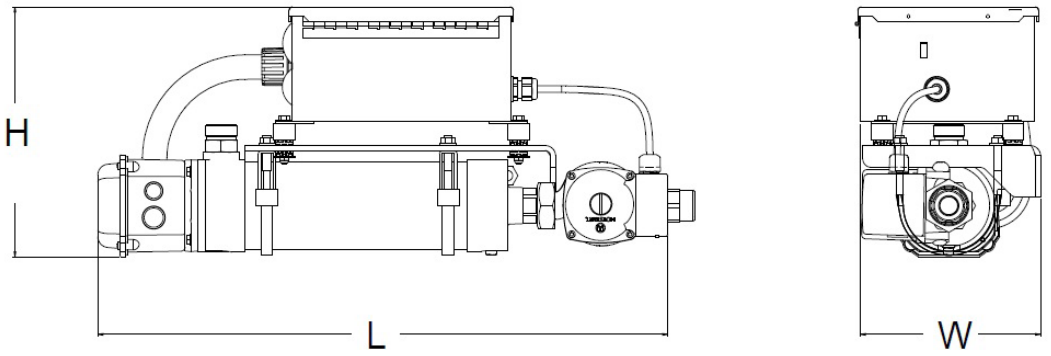

Wiring Diagram

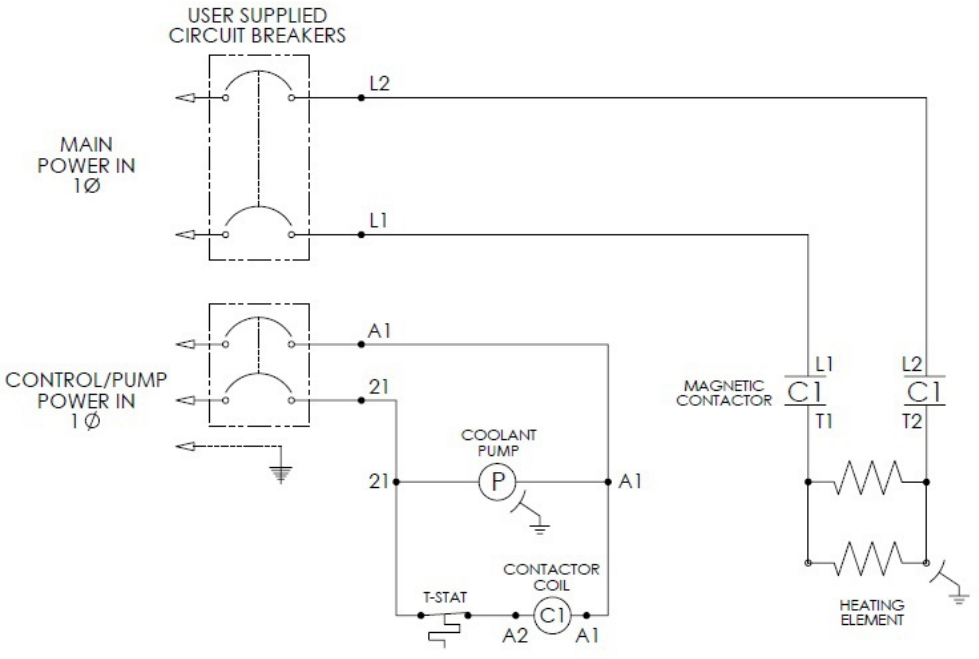

Materials and specifications are subject to change without notice.The International System of Units (SI) is used in this publication.
© 2020 Caterpillar. All Rights Reserved. CAT, CATERPILLAR, LET'S DO THE WORK, their respective logos, "Caterpillar Corporate Yellow", the "Power Edge" and Cat "Modern Hex" trade dress as well as corporate and product identity used herein, are trademarks of Caterpillar and may not be used without permission

©2020 Caterpillar
All rights reserved.

LOAD TEST

Generator Startup Checklist

BOYD CAT

POWER SYSTEMS DIVISION

Installation job site_____ Date: _____

Caterpillar—Olympian Model_____ Rating_____KW Standby----Prime

Engine S/N_____ Generator S/N_____ GenSet Pkg. S/N_____

ATS Model_____ ATS S/N_____

ATS Model_____ ATS S/N_____

✓	Check Points	Notes
	Lube system connections	
	Oil Level	
	Check fuel system connections	
	Check fuel system linkages	
	Check air filter	
	Check vent piping and connections	
	Check and adjust fan belts	
	Check anti-freeze—top as needed	
	Check remote components (if applicable)	
	Check radiator core and tanks	
	Check jacket water heater connections and operation	
	Check battery electrolyte level	
	Check cables, lugs, and terminals	
	Check battery charger and operation Make necessary connections	
	Check power connections	
	Check circuit breaker connections and operation	
	Check panel light operation	
	Check annunciator lights and alarms	
	Check remote annunciator connections (if equipped)	
	Connect control wiring as necessary	
	Check transfer switch operation	
	Check phase rotation	
	Adjust time delays as required	
	Check shutdowns and alarms	
	Check exhaust system	

ENGINE RUNNING

Oil pressure_____ PSI Engine RPM_____ Freq _____ AC Voltage_____
Battery Charging Volts (if applicable)_____ Volts Water Temp_____

Note additional comments:_____

_____

_____

I hereby confirm that the above generator set has been correctly installed at the above location.

Field Technician_____Signature_____

INSTALLATION GUIDELINES

RECOMMENDED INSTALLATION GUIDELINES

The following outline contains general requirements for successful installation of a generator set . The list is not meant to be a substitute for other and more specific installation guides by equipment manufacturers, but rather as a general guideline to the installing personnel.

Important! Prior to beginning installation, please reference the enclosed map and contact your Boyd representative. This is your contact person for installation related questions. This no-charge service will save time and money!

Storage of Equipment

All-equipment, especially generators, control panels, transfer switches, etc., should be stored in a clean, dry, and non-corrosive atmosphere between the time of arrival on the jobsite and final installation. Medium-voltage equipment has specific and stricter storage requirements.

Care should be taken in abnormal environments. IE equipment should be properly protected from the effects of chlorine atmosphere as is often encountered in water treatment plants, etc.

Concrete Pad

The concrete pad on which the generator set is mounted should be reinforced with steel mesh or bars. The pad depth should be calculated to support the generator set, the housing and all associated equipment. If the unit includes a base fuel tank, the weight of the fuel must be included.

It is recommended that the pad extend at least 12" beyond all sides of the enclosure.

Ventilation

Enclosure sides and rear must be located a minimum of 48" from any obstruction or wall to insure proper ventilation and permit all doors to be opened fully. Please consult a Boyd representative if more than one side of the enclosure will be in close proximity to an obstruction.

Radiator end should be located to allow proper clearance from any obstruction or wall so no recirculation of hot air or exhaust gases will occur. Units with horizontal radiator discharge generally require clearance equal to the length of the generator set.

When possible, position unit so that the prevailing winds blow from rear to front over the Generator, (generally from south-west to north-east) to help dissipate the hot gases.

OPEN UNITS – verify proper ventilation to provide proper combustion and cooling air flow for unit operation while maintaining ½" H_2O maximum restriction. *** A general rule of thumb – intake surface area should be 1.5X the discharge area of the radiator. This is a rule of thumb only and does not guarantee sufficient flow in all cases.*

Exhaust Piping

Engine exhaust should be directed up and away from the generator air intake Rain caps or weather guards are recommended on the exhaust outlet elbow. Again, the prevailing winds must be considered when locating the exhaust outlet.

Extreme care should be taken to ensure that engine exhaust is not drawn into the buildings intake air system.

OPEN UNITS – must be installed with a stainless flex pipe at the turbo. Care should be taken to prevent any weight bearing on the turbocharger.

Starting and Battery Groups

Jacket water heaters are required for all engine generator sets to ensure NFPA 99/110 starting requirements and to prolong equipment life.

Batteries should be sized to provide at least 60 seconds of cranking time at the minimum ambient temperature. Battery heating pads can be harmful to batteries and are not recommended. Modern battery chargers are temperature compensated and must be located in the same ambient temperature as the batteries. Heating pads may cause temperature compensated chargers to over-charge their batteries.

The battery manufacturer's recommendations should be followed for any battery installation in an outdoor enclosure. Nickel Cadmium batteries are not intended for and should not be used in outdoor enclosure installations.

Electrical Wiring for Package Generator Set and ATS

- *Transfer switch(es) may be energized prior to the arrival of Boyd personnel. Refer to the O&M manual (located inside of the switch) for instructions prior to energizing.*
- *Boyd Technicians will land/terminate control wiring for the generator set and ATS.*
- *A separate interconnect diagram is provided for wiring specifics.*

Power wiring must be connected to the generator by means of a flexible element. In case of an engine mounted generator control panel, it is important that no extra weight be imposed by the flexible conduit on control panel mounts.

Boyd will furnish standard lugs as shipped by the manufacturer, an adder will be charged for providing lugs other than those shipped by the factory.

DC Control Wiring and AC feeds can NOT be in the same conduit.

Shielded cables must be continuous without splices. All control wiring must be clearly marked on both ends prior to technician arrival.

Remote auxiliary/support equipment (IE; fuel tanks, day tanks, pumps, battery chargers, etc.) will require additional wiring. Consult the individual component sections of this submittal or contact your Boyd representative.

Care must be taken not to connect AC voltage to the DC control voltage. AC Circuits should be in separate conduit from all DC control circuits.

Installation & Pre-Start-Up and Start-Up Guidelines

Before factory authorized start-up can be initiated, the following must be completed:

By Installing Contractor

- Generator installed and AC (primary) connections pulled, landed, and properly torqued
  - In certain cases where a load bank test is required the Boyd representative may request that primary cables not be terminated prior to technician arrival
- AC auxiliary service wiring pulled. A Boyd technician will land the aux wiring during start-up. Wiring should be clearly identified/labeled and contractor should be prepared to energize aux service during start-up
- Fuel tanks (main and day) plumbed and filled
- Transfer switch installed with AC (primary) connections pulled, landed, and properly torqued. Utility source must be available during commissioning.
- Enclosure is cleaned and free of debris.
- All other auxiliary equipment needed to operate the generator set shall be installed. Consult with Boyd representative if in doubt.

Prior to a technician being dispatched your Boyd service representative will pre-inspect the project. Please contact your service representative, contact information is on the cover of this submittal.

By Boyd Cat Power Systems Sales Department Representative

- Pre-inspect all applicable systems / Meet with installing contractor if any corrections or additions are necessary.
- Prepare pre-inspection report and authorize dispatch of technician
- Check all fuel levels – verify diesel tanks are filled
- Verify all AC and DC wiring is pulled
- Inspect diesel fuel system – complete and proper installation
- Inspect air intake and exhaust systems.
  - Inspect air cleaner(s) to ensure proper storage (clean/dry)
  - Verify sufficient air-flow/ventilation for installation
- Discuss testing requirements with contractor / coordinate testing.
  - ATS testing requires outages to fed loads, we cannot complete and certify a start-up without transferring the ATS.
- Review project information with assigned technician

By Boyd Cat Technician

- Review submittal and testing requirements prior to job
- Land Gen/ATS/Annunciator control wiring
- Connect pre-charged batteries to engine or fill dry-batteries
- Land and energize shore-power (heater, charger, etc.)
- Start engine and check speed
- Check generator phase rotation against utility at the ATS
- Verify matched phase-phase and phase-neutral voltages

- Make sure automatic transfer switch operates correctly and is adjusted as job specifications requires
- Check all alarms, audible and visual
- Adjust the battery charger charge rate for the type of battery being used
- Check engine, cooling system and fuel system for leaks
- Check coolant protection level after running
- Set engine governors for proper operation if electronic or load share type.
- Perform load bank test or building load test as specified and maintain log if required
- Submit a copy of the factory start-up report for insertion into the branch service department history folder and have customer sign start-up report.

End-user instruction is normally provided by a Boyd Product Support Representative after completion of the start-up.

NOTE: If there are any questions regarding proper installation before, during, or after commissioning, please contact your Boyd Cat representative.

BOYD CAT

Parkersburg
Ohio
West Virginia
Jackson
Nitro
Belle
Diamond
Dry Ridge
Ashland
Jeffersonville
Indiana
Middletown
Mt. Sterling
Logan
Beckley
Evansville
Louisville
Lexington
Pikeville
Elizabethtown
Hazard
Kentucky
Columbia
Corbin
Bowling Green
Hopkinsville
Paducah
Mayfield

Effective with sales to the first user on or after December 1, 2010

CATERPILLAR LIMITED WARRANTY

Industrial, Petroleum, Locomotive, and Agriculture Engine Products and Electric Power Generation Products

Worldwide

Caterpillar Inc. or any of its subsidiaries ("Caterpillar") warrants new and remanufactured engines and electric power generation products sold by it (including any products of other manufacturers packaged and sold by Caterpillar), to be free from defects in material and workmanship.

This warranty does not apply to Caterpillar Motoren (CM) product; engines sold for use in on-highway vehicle or marine applications; engines in machines manufactured by or for Caterpillar; 3500 and 3600 Family engines used in locomotive applications; 3000 Family engines, C0.5 through C4.4 and ACERT (C6.6, C7, C7.1, C9, C9.3, C11, C13, C15, C18, C27, and C32) engines used in industrial applications; or Cat batteries. These products are covered by other Caterpillar warranties.

This warranty is subject to the following:

Warranty Period

- For new industrial engines, engines in a petroleum applications or Petroleum Power Systems, or engines in a Locomotive application, or Uninterruptible Power Supply (UPS) systems, the warranty period is 12 months after date of delivery to the first user.
- For Mobile Agricultural applications the warranty period is 24 months after date of delivery to the first user.
- For controls only (EPIC), configurable, and custom switchgear products, as well as automatic transfer switch products, the warranty period is 24 months after date of delivery to the first user.
- For electric power generation products in prime or continuous applications the warranty period is 12 months. For standby applications the warranty period is 24 months/1000 hours. For emergency standby applications the warranty period is 24 months/400 hours. All terms begin after date of delivery to the first user.
- For all Remanufactured Generator (GenEnds) products in prime or continuous applications the warranty period is 12 months. For standby applications the warranty period is 24 months/1000 hours. For emergency standby applications the warranty period is 24 months/400 hours. All terms begin after date of delivery to the first user.
- For all Remanufactured engines, the warranty period is 6 months (12 months for mobile agricultural and standby electric power generation applications) after date of delivery to the first user.

Caterpillar Responsibilities

If a defect in material or workmanship is found during the warranty period, Caterpillar will, during normal working hours and at a place of business of a Cat dealer or other source approved by Caterpillar:

- Provide (at Caterpillar's choice) new, Remanufactured, or Caterpillar approved repaired parts or assembled components needed to correct the defect.

Note: New, remanufactured, or Caterpillar approved repaired parts or assembled components provided under the terms of this warranty are warranted for the remainder of the warranty period applicable to the product in which installed as if such parts were original components of that product. Items replaced under this warranty become the property of Caterpillar.

- Replace lubricating oil, filters, coolant, and other service items made unusable by the defect.
- Provide reasonable and customary labor needed to correct the defect, including labor to disconnect the product from and reconnect the product to its attached equipment, mounting, and support systems, if required.

For new 3114, 3116, and 3126 engines and electric power generation products (including any new products of other manufacturers packaged and sold by Caterpillar):

- Provide travel labor, up to four hours round trip, if in the opinion of Caterpillar, the product cannot reasonably be transported to a place of business of a Cat dealer or other source approved by Caterpillar (travel labor in excess of four hours round trip, and any meals, mileage, lodging, etc. is the user's responsibility).

For all other products:

- Provide reasonable travel expenses for authorized mechanics, including meals, mileage, and lodging, when Caterpillar chooses to make the repair on-site.

User Responsibilities

The user is responsible for:

- Providing proof of the delivery date to the first user.
- Labor costs, except as stated under "Caterpillar Responsibilities," including costs beyond those required to disconnect the product from and reconnect the product to its attached equipment, mounting, and support systems.
- Travel or transporting costs, except as stated under "Caterpillar Responsibilities."
- Premium or overtime labor costs.
- Parts shipping charges in excess of those that are usual and customary.
- Local taxes, if applicable.
- Costs to investigate complaints, unless the problem is caused by a defect in Caterpillar material or workmanship.
- Giving timely notice of a warrantable failure and promptly making the product available for repair.

(continue on the reverse side……..)

- Performance of the required maintenance (including use of proper fuel, oil, lubricants, and coolant) and items replaced due to normal wear and tear.
- Allowing Caterpillar access to all electronically stored data.

Limitations

Caterpillar is not responsible for:

- Failures resulting from any use or installation that Caterpillar judges improper.
- Failures resulting from attachments, accessory items, and parts not sold or approved by Caterpillar.
- Failures resulting from abuse, neglect, and/or improper repair.
- Failures resulting from user's delay in making the product available after being notified of a potential product problem.
- Failures resulting from unauthorized repairs or adjustments, and unauthorized fuel setting changes.
- Damage to parts, fixtures, housings, attachments, and accessory items that are not part of the engine or electric power generation product (including any products of other manufacturers packaged and sold by Caterpillar).
- Repair of components sold by Caterpillar that is warranted directly to the user by their respective manufacturer. Depending on type of application, certain exclusions may apply. Consult your Cat dealer for more information.

For products operating outside of Australia, Fiji, Nauru, New Caledonia, New Zealand, Papua New Guinea, the Solomon Islands and Tahiti, the following is applicable:

NEITHER THE FOREGOING EXPRESS WARRANTY NOR ANY OTHER WARRANTY BY CATERPILLAR, EXPRESS OR IMPLIED, IS APPLICABLE TO ANY ITEM CATERPILLAR SELLS THAT IS WARRANTED DIRECTLY TO THE USER BY ITS MANUFACTURER.

THIS WARRANTY IS EXPRESSLY IN LIEU OF ANY OTHER WARRANTIES, EXPRESS OR IMPLIED, INCLUDING ANY WARRANTY OF MERCHANTABILITY OR FITNESS FOR A PARTICULAR PURPOSE, EXCEPT CATERPILLAR EMISSION-RELATED COMPONENTS WARRANTIES FOR NEW ENGINES, WHERE APPLICABLE. REMEDIES UNDER THIS WARRANTY ARE LIMITED TO THE PROVISION OF MATERIAL AND SERVICES, AS SPECIFIED HEREIN.

CATERPILLAR IS NOT RESPONSIBLE FOR INCIDENTAL OR CONSEQUENTIAL DAMAGES.

CATERPILLAR EXCLUDES ALL LIABILITY FOR OR ARISING FROM ANY NEGLIGENCE ON ITS PART OR ON THE PART OF ANY OF ITS EMPLOYEES, AGENTS OR REPRESENTATIVES IN RESPECT OF THE MANUFACTURE OR SUPPLY OF GOODS OR THE PROVISION OF SERVICES RELATING TO THE GOODS.

IF OTHERWISE APPLICABLE, THE VIENNA CONVENTION ON CONTRACTS FOR THE INTERNATIONAL SALE OF GOODS IS EXCLUDED IN ITS ENTIRETY.

For personal or family use engines or electric power generation products, operating in the USA, its territories and possessions, some states do not allow limitations on how long an implied warranty may last nor allow the exclusion or limitation of incidental or consequential damages. Therefore, the previously expressed exclusion may not apply to you. This warranty gives you specific legal rights and you may also have other rights, which vary by jurisdiction. To find the location of the nearest Cat dealer or other authorized repair facility, call (800) 447-4986. If you have questions concerning this warranty or its applications, call or write:

In USA and Canada: Caterpillar Inc., Engine Division, P. O. Box 610, Mossville, IL 61552-0610, Attention: Customer Service Manager, Telephone (800) 447-4986. Outside the USA and Canada: Contact your Cat dealer.

For products operating in Australia, Fiji, Nauru, New Caledonia, New Zealand, Papua New Guinea, the Solomon Islands and Tahiti, the following is applicable:

THIS WARRANTY IS IN ADDITION TO WARRANTIES AND CONDITIONS IMPLIED BY STATUTE AND OTHER STATUTORY RIGHTS AND OBLIGATIONS THAT BY ANY APPLICABLE LAW CANNOT BE EXCLUDED, RESTRICTED OR MODIFIED ("MANDATORY RIGHTS"). ALL OTHER WARRANTIES OR CONDITIONS, EXPRESS OR IMPLIED (BY STATUTE OR OTHERWISE), ARE EXCLUDED.

NEITHER THIS WARRANTY NOR ANY OTHER CONDITION OR WARRANTY BY CATERPILLAR, EXPRESS OR IMPLIED (SUBJECT ONLY TO THE MANDATORY RIGHTS), IS APPLICABLE TO ANY ITEM CATERPILLAR SELLS THAT IS WARRANTED DIRECTLY TO THE USER BY ITS MANUFACTURER.

TO THE EXTENT PERMITTED UNDER THE MANDATORY RIGHTS, IF CATERPILLAR IS THE SUPPLIER TO THE USER, CATERPILLAR'S LIABILITY SHALL BE LIMITED AT ITS OPTION TO (a) IN THE CASE OF SERVICES, THE SUPPLY OF THE SERVICES AGAIN OR THE PAYMENT OF THE COST OF HAVING THE SERVICES SUPPLIED AGAIN, AND (b) IN THE CASE OF GOODS, THE REPAIR OR REPLACEMENT OF THE GOODS, THE SUPPLY OF EQUIVALENT GOODS, THE PAYMENT OF THE COST OF SUCH REPAIR OR REPLACEMENT OR THE ACQUISITION OF EQUIVALENT GOODS.

CATERPILLAR EXCLUDES ALL LIABILITY FOR OR ARISING FROM ANY NEGLIGENCE ON ITS PART OR ON THE PART OF ANY OF ITS EMPLOYEES, AGENTS OR REPRESENTATIVES IN RESPECT OF THE MANUFACTURE OR SUPPLY OF GOODS OR THE PROVISION OF SERVICES RELATING TO THE GOODS.

CATERPILLAR IS NOT LIABLE FOR INCIDENTAL OR CONSEQUENTIAL DAMAGES UNLESS IMPOSED UNDER MANDATORY RIGHTS.

IF OTHERWISE APPLICABLE, THE VIENNA CONVENTION ON CONTRACTS FOR THE INTERNATIONAL SALE OF GOODS IS EXCLUDED IN ITS ENTIRETY.

This warranty covers every major component of the products. Claims under this warranty should be submitted to a place of business of a Cat dealer or other source approved by Caterpillar. For further information concerning either the location to submit claims or Caterpillar as the issuer of this warranty, write Caterpillar Inc., 100 N. E. Adams St., Peoria, IL USA 61629.