UNIVERSITY OF KENTUCKY

Purchasing Division

Request for Proposal
UK-2290-23
Proposal Due Date – 10/07/2022

Indoor Track
Pre-Engineered Metal Building
Project# 2584.0

An Equal Opportunity University

UNIVERSITY OF KENTUCKY
Purchasing Division

REQUEST FOR PROPOSAL (RFP)

ATTENTION: This is not an order. Read all instructions, terms and conditions carefully.

PROPOSAL NO.:	**UK-2290-23**	**RETURN ORIGINAL COPY OF PROPOSAL TO:**
Issue Date:	**09/20/2022**	**UNIVERSITY OF KENTUCKY**
Title:	**Indoor Track Surface**	**PURCHASING DIVISION**
Purchasing Officer:	**Ken Scott**	**411 S LIMESTONE**
		ROOM 322 PETERSON SERVICE BLDG.
Phone:	**859.257.9102/Kenneth.Scott@uky.edu**	**LEXINGTON, KY 40506-0005**

IMPORTANT: PROPOSALS MUST BE RECEIVED BY: 10/07/2022 @ 3 P.M. LEXINGTON, KY TIME.

NOTICE OF REQUIREMENTS

1. The University's General Terms and Conditions and Instructions to Bidders, viewable at www.uky.edu/Purchasing/terms.htm, apply to this RFP. When the RFP includes construction services, the University's General Conditions for Construction and Instructions to Bidders, viewable at www.uky.edu/Purchasing/ccphome.htm, apply to the RFP.
2. Contracts resulting from this RFP must be governed by and in accordance with the laws of the Commonwealth of Kentucky.
3. Any agreement or collusion among offerors or prospective offerors, which restrains, tends to restrain, or is reasonably calculated to restrain competition by agreement to bid at a fixed price or to refrain from offering, or otherwise, is prohibited.
4. Any person who violates any provisions of KRS 45A.325 shall be guilty of a felony and shall be punished by a fine of not less than five thousand dollars nor more than ten thousand dollars, or be imprisoned not less than one year nor more than five years, or both such fine and imprisonment. Any firm, corporation, or association who violates any of the provisions of KRS 45A.325 shall, upon conviction, be fined not less than ten thousand dollars or more than twenty thousand dollars.

AUTHENTICATION OF BID AND STATEMENT OF NON-COLLUSION AND NON-CONFLICT OF INTEREST

I hereby swear (or affirm) under the penalty for false swearing as provided by KRS 523.040:

1. That I am the offeror (if the offeror is an individual), a partner, (if the offeror is a partnership), or an officer or employee of the bidding corporation having authority to sign on its behalf (if the offeror is a corporation);
2. That the attached proposal has been arrived at by the offeror independently and has been submitted without collusion with, and without any agreement, understanding or planned common course of action with, any other Contractor of materials, supplies, equipment or services described in the RFP, designed to limit independent bidding or competition;
3. That the contents of the proposal have not been communicated by the offeror or its employees or agents to any person not an employee or agent of the offeror or its surety on any bond furnished with the proposal and will not be communicated to any such person prior to the official closing of the RFP:
4. That the offeror is legally entitled to enter into contracts with the University of Kentucky and is not in violation of any prohibited conflict of interest, including, but not limited to, those prohibited by the provisions of KRS 45A.330 to .340, and164.390;
5. That the offeror, and its affiliates, are duly registered with the Kentucky Department of Revenue to collect and remit the sale and use tax imposed by Chapter 139 to the extent required by Kentucky law and will remain registered for the duration of any contract award;
6. That I have fully informed myself regarding the accuracy of the statement made above.

SWORN STATEMENT OF COMPLIANCE WITH CAMPAIGN FINANCE LAWS

In accordance with KRS45A.110 (2), the undersigned hereby swears under penalty of perjury that he/she has not knowingly violated any provision of the campaign finance laws of the Commonwealth of Kentucky and that the award of a contract to a bidder will not violate any provision of the campaign finance laws of the Commonwealth of Kentucky.

CONTRACTOR REPORT OF PRIOR VIOLATIONS OF KRS CHAPTERS 136, 139, 141, 337, 338, 341 & 342

The contractor by signing and submitting a proposal agrees as required by 45A.485 to submit final determinations of any violations of the provisions of KRS Chapters 136, 139, 141, 337, 338, 341 and 342 that have occurred in the previous five (5) years prior to the award of a contract and agrees to remain in continuous compliance with the provisions of the statutes during the duration of any contract that may be established. Final determinations of violations of these statutes must be provided to the University by the successful contractor prior to the award of a contract.

CERTIFICATION OF NON-SEGREGATED FACILITIES

The contractor, by submitting a proposal, certifies that he/she is in compliance with the Code of Federal Regulations, No. 41 CFR 60-1.8(b) that prohibits the maintaining of segregated facilities.

SIGNATURE REQUIRED: This proposal cannot be considered valid unless signed and dated by an authorized agent of the offeror. Type or print the signatory's name, title, address, phone number and fax number in the spaces provided. Offers signed by an agent are to be accompanied by evidence of his/her authority unless such evidence has been previously furnished to the issuing office.

DELIVERY TIME:	**NAME OF COMPANY:**	**DUNS #**
PROPOSAL FIRM THROUGH:	**ADDRESS:**	**Phone/Fax:**
PAYMENT TERMS:	**CITY, STATE & ZIP CODE:**	**E-MAIL:**
SHIPPING TERMS: F. O. B. DESTINATION PREPAID AND ALLOWED	**TYPED OR PRINTED NAME:**	**WEB ADDRESS:**
FEDERAL EMPLOYER ID NO.:	**SIGNATURE:**	**DATE:**

Table of Contents

1.0 DEFINITIONS 6
2.0 GENERAL OVERVIEW 7
2.1 Intent and Scope 7
2.2 Background Information 7
2.3 University Information 8
2.4 Supplier Diversity and Procurement 10
3.0 PROPOSAL REQUIREMENTS 11
3.1 Key Event Dates 11
3.2 Offeror Communication 11
3.3 Pre-Proposal Conference 12
3.4 Offeror Presentations 12
3.5 Preparation of Offers 12
3.6 Proposed Deviations from the RFP 13
3.7 Proposal Submission and Deadline 13
3.8 Modification or Withdrawal of Offer 14
3.9 Acceptance or Rejection and Award of Proposal 14
3.10 Rejection 14
3.11 Addenda 14
3.12 Disclosure of Offeror's Response 15
3.13 Restrictions on Communications with University Staff 15
3.14 Cost of Preparing Proposal 15
3.15 Disposition of Proposals 15
3.16 Alternate Proposals 15
3.17 Questions 15
3.18 Section Titles in the RFP 16
3.19 No Contingent Fees 16
3.20 Proposal Addenda and Rules for Withdrawal 16
3.21 Requirement To Perform Vendor Onboarding and Registration 16
4.0 PROPOSAL FORMAT AND CONTENT 17
4.1 Proposal Information and Criteria 17

4.2 Signed Authentication of Proposal and Statements of Non-Collusion and Non-Conflict of Interest Form 17
4.3 Transmittal Letter 17
4.4 Executive Summary and Proposal Overview 18
4.5 Criteria 1 - Offeror Qualifications 20
4.6 Criteria 2 – Services Defined 20
4.7 Criteria 3 – Financial Proposal 20
4.8 Criteria 4 – Evidence of Successful Performance and Implementation Schedule 21
4.9 Criteria 5 – Other Additional Information 21
5.0 EVALUATION CRITERIA PROCESS 22
6.0 SPECIAL CONDITIONS 23
6.1 Contract Term 23
6.2 Effective Date 23
6.3 Competitive Negotiation 23
6.4 Appearance Before Committee 23
6.5 Additions, Deletions or Contract Changes 23
6.6 Contractor Cooperation in Related Efforts 24
6.7 Entire Agreement 24
6.8 Governing Law 24
6.9 Kentucky's Personal Information Security and Breach Investigation Procedures and Practices Act 24
6.10 Termination for Convenience 25
6.11 Termination for Non-Performance 25
6.12 Funding Out 26
6.13 Prime Contractor Responsibility 26
6.14 Assignment and Subcontracting 26
6.15 Permits, Licenses, Taxes 26
6.16 Attorneys' Fees 27
6.17 Royalties, Patents, Copyrights and Trademarks 27
6.18 Indemnification 27
6.19 Insurance 27
6.20 Method of Award 28
6.21 Reciprocal Preference 28
6.22 Confidentiality 28

6.23 Conflict of Interest 29
6.24 Copyright Ownership and Title to Designs and Copy 29
6.25 University Brand Standards 30
6.26 Payment Terms 31
7.0 SCOPE OF SERVICES 31
7.1 Detailed Services Defined 31
7.2 Additional Special Services and Requirements 32
8.0 FINANCIAL OFFER SUMMARY 32
8.1 Base Price 32
8.2 Alternates 33
8.3 Optional and Unit Pricing 34

Attachments:

Attachment “A” – Drawings
Attachment “B” – Specifications
Attachment “C” – Special Conditions
Attachment “D” – General Conditions
Attachment "E” – Affidavit
Attachment "F” – Payment Bond
Attachment "G” – Performance Bond
Attachment "H” – Contract Agreement
Attachment "I” – DBE Participation Goals
Attachment "J” – Tree Protection Standards
Attachment "K” – COVID Contractor Protocol Instructions
Attachment “L” – Common Requirements
Attachment “M” – FA Out of Service Policy
Attachment “N” – Site Logistics Plan
Attachment “O” – Construction Schedule

1.0 DEFINITIONS

The term "addenda" means written or graphic instructions issued by the University of Kentucky prior to the receipt of proposals that modify or interpret the RFP documents by additions, deletions, clarifications and/or corrections.

The term "competitive negotiations" means the method authorized in the Kentucky Revised Statutes, Chapter 45A.085.

The terms "offer" or “proposal” mean the offeror’s/offerors’ response to this RFP.

The term "offeror" means the entity or contractor group submitting the proposal.

The term "contractor" means the entity receiving a contract award.

The term "purchasing agency" means the University of Kentucky, Purchasing Division, Room 322 Peterson Service Building, Lexington, KY 40506-0005.

The term "purchasing official" means the University of Kentucky’s appointed contracting representative.

The term "responsible offeror" means a person, company or corporation that has the capability in all respects to perform fully the contract requirements and the integrity and reliability that will assure good faith performance. In determining whether an offeror is responsible, the University may evaluate various factors including (but not limited to): financial resources; experience; organization; technical qualifications; available resources; record of performance; integrity; judgment; ability to perform successfully under the terms and conditions of the contract; adversarial relationship between the offeror and the University that is so serious and compelling that it may negatively impact the work performed under this RFP; or any other cause determined to be so serious and compelling as to affect the responsibility of the offeror.

The term "solicitation" means RFP.

The term "University" means University of Kentucky.

2.0 GENERAL OVERVIEW

2.1 Intent and Scope

This Request for Proposal (RFP) is issued to solicit proposals from qualified, experienced, financially sound, and responsible firms to install a new Pre-Engineered Metal Building system for the new UK Indoor Track Facility in Lexington, Kentucky. The scope of work of this Project consists of the supply, installation and warranting of all materials and products, including all labor, superintendence, equipment, temporary power, transportation, lighting, plant and tools related to the construction of the work as herein specified in this RFP and Attachments.

The firm selected would provide all design and construction services necessary to construct the facilities in accordance with the guidelines, standards and limitations contained in the Request for Proposal. Also required will be quality control testing, construction program inspections and completed project documentation.

- The Offeror response must provide the reviewers of the proposal with information on the function of each component and how components are integrated. The response must also provide a detailed overview of the capabilities of the proposed system.

- The Offeror who is chosen to install the system must provide a turn-key installation with full functionality.

- The Offeror who is chosen must provide a single point of contact during the warranty period for all repairs. This single point of contact will have full responsibility for ensuring repairs are completed. After the warranty period has expired the Offeror must offer a maintenance contract on the system with a single point-of-contact for all repairs.

- The design shall comply with all applicable codes, Owners standards http://www.uky.edu/Services/CPMD/ukstandards/Divisions/Master.html, rules, and regulations.

At minimum, potential Offerors (including sub-base contractors) are to have at least five (5) years' experience with providing "turnkey" synthetic track projects to NCAA Division I FBS (Big 5 conferences preferred) schools.

2.2 Background Information

The University is looking for a firm that can provide all design and construction services necessary to construct a pre-engineered metal building in accordance with the guidelines, standards and limitations contained in the Request for Proposal.

2.3 University Information

Since his arrival, President Eli Capilouto has set forth an ambitious agenda to extend and enhance our role as Kentucky's land-grant and flagship research university. By focusing on infrastructure growth and improvement; creating opportunities for innovative teaching, learning, and academic excellence; fostering a robust research and creative scholarship enterprise; providing life-saving subspecialty care; empowering communities through service and outreach; and encouraging a transparent and shared dialogue about institutional priorities; the University of Kentucky will ensure a new century of promise for the people we impact.

Founded in 1865 as a land-grant institution adjacent to downtown Lexington, UK is nestled in the scenic heart of the beautiful Bluegrass Region of Kentucky. From its early beginnings, with only 190 students and 10 professors, UK's campus now covers more than 918 acres and is home to more than 30,000 students and approximately 14,500 employees, including more than 2,300 full-time faculty. UK is one of a small number of universities in the United States that has programs in agriculture, engineering, a full complement of health colleges including medicine and pharmacy, law and fine arts on a single campus, leading to groundbreaking discoveries and unique interdisciplinary collaboration. The state's flagship university consists of 17 academic and professional colleges where students can choose from more than 200 majors and degree programs at the undergraduate and graduate levels. The colleges are Agriculture, Food and Environment; Arts and Sciences; Business and Economics; Communication and Information; Dentistry; Design; Education; Engineering; Fine Arts; Graduate School; Health Sciences; Law; Medicine; Nursing; Pharmacy; Public Health; and Social Work. These colleges are supported by a modern research library system.

Research at the University of Kentucky is a dynamic enterprise encompassing both traditional scholarship and emerging technologies, and UK's research faculty, staff and students are establishing UK as one of the nation's most prolific public research universities. UK's research enterprise attracted $285 million in research grants and contracts from out-of-state sources, which generated a $580 million impact on the Kentucky economy. Included in this portfolio is $153 million in federal awards from the National Institutes of Health, non-NIH grants from the Department Health and Human Services, the National Science Foundation, Department of Energy, Department of Agriculture and NASA, among others. The National Science Foundation ranks UK's research enterprise 44th among public institutions.

With more than 50 research centers and institutes, UK researchers are discovering new knowledge, providing a rich training ground for current students and the next generation of researchers, and advancing the economic growth of the Commonwealth of Kentucky. Several centers excel in the services offered to the public. The Gluck Equine Research Center is one of only three facilities of its kind in the world, conducting research in equine diseases.

The Center for Applied Energy Research is pursuing groundbreaking discovery across the energy disciplines. CAER staff are pioneering new ways to sustainably utilize Kentucky natural resources through carbon-capture algae technology, biomass/coal to liquid products and the opening of UK's first LEED-certified research lab to support the development of Kentucky's growing alternative energy industry. Among the brightest examples of UK's investment in transformative research is the Markey Cancer Center.

As a center of excellence and distinction at UK, Markey's robust research and clinical enterprise is the cornerstone of our commitment to Kentucky – fundamental to our success in uplifting lives through our endeavors and improving the general health and welfare of our state – burdened by the nation's highest rate of cancer deaths per 100,000 people. In 2013, Markey earned the prestigious National Cancer Institute-designation (NCI) – one of 68 nationally and the only one in Kentucky.

The University of Kentucky was awarded a $20 million Clinical Translational Sciences Award (CTSA) from the National Institutes of Health (NIH). As one of only 60 institutions with this research distinction, UK was awarded the CTSA for its potential in moving research and discovery in the lab into practical field and community applications. The CTSA and NCI are part of a trifecta of federal research grants that includes an Alzheimer's Disease Center. UK is one of only 22 universities in the country to hold all three premier grants from NIH.

Established in 1957, the medical center at UK is one of the nation's finest academic medical centers and includes the University's clinical enterprise, UK HealthCare. The 569-bed UK Albert B. Chandler Hospital and Kentucky Children's Hospital, along with 256 beds at UK Good Samaritan Hospital, are supported by a growing faculty and staff providing the most advanced subspecialty care for the most critically injured and ill patients throughout the Commonwealth and beyond. Over the last several years, the number of patients served by the medical enterprise has increased from roughly 19,000 discharges to more than 36,000 discharges in 2014.

UK Chandler Hospital includes the only Level 1 Trauma Center for both adult and pediatric patients in Central and Eastern Kentucky. In addition, UK HealthCare recently opened one of the country's largest robotic hybrid operating rooms and the first of its kind in the region. While our new patient care pavilion is the leading healthcare facility for advanced medical procedures in the region, our talented physicians consult with and travel to our network of affiliate hospitals so Kentucky citizens can receive the best health care available close to their home and never need to leave the Bluegrass for complex subspecialty care.

UK's agenda remains committed to accelerating the University's movement toward academic excellence in all areas and gain worldwide recognition for its outstanding academic programs, its commitment to students, its investment in pioneering research and discovery, its success in building a diverse community and its engagement with the larger society. It is all part of the University's fulfillment of our promise to Kentucky to position our state as a leader in American prosperity.

SUSTAINABILITY

Sustainability is an institution-wide priority for the University of Kentucky. We strive to ensure that all activities are ecologically sound, socially just, and economically viable, and that they will continue to be so for future generations. This commitment also prioritizes the integration of these principles in curricula, research, athletics, health care, creative works, and outreach. This principled approach to operational practices and intellectual pursuits is intended to prepare students and empower the campus community to support sustainable development in the Commonwealth and beyond. The UK Sustainability Strategic Plan guides these efforts (https://www.uky.edu/sustainability/sustainability-strategic-plan).

2.4 Supplier Diversity and Procurement

The University of Kentucky is committed to serve as an advocate for diverse businesses in their efforts to conduct business. Diverse Business Enterprises (DBE) consist of minority, women, disabled, veteran and disabled veteran owned business firms that are at least fifty-one percent owned and operated by an individual(s) of the aforementioned categories. Also included in this category are disabled business enterprises and non-profit work centers for the blind and severely disabled.

The University is committed to increasing the amount of goods and services acquired from businesses owned and controlled by diverse persons to 10% of all procurement expenditures. The University expects its suppliers to support and assist in this effort.

Among the University's goals for DBE participation in procurement are:

- To ensure the absence of barriers that reduce the participation of diverse suppliers
- Educate vendors on "how to" do business with the University
- Support diverse vendors seeking to do business with the University in the areas of goods, services, construction, and other areas of procurement
- Encourage participation of qualified diverse vendors by directing them to agencies that can benefit from their product or service
- Provide resources for diverse vendors
- Sponsor events to assist diverse vendors in becoming active, responsible, and responsive participants in the University's purchasing opportunities

For additional information regarding how diverse suppliers may participate in this Request for Proposal, submit any questions to the Purchasing Officer as indicated in Section 3.2 by the Deadline for Written Questions date.

3.0 PROPOSAL REQUIREMENTS

3.1 Key Event Dates

Release of RFP	09/20/2022
Pre-Proposal Conference (Optional)	09/23/2022
Deadline for Written Questions	3 p.m. Lex KY Time on 09/27/2022
RFP Proposals Due	3 p.m. Lex KY Time on 10/07/2022

3.2 Offeror Communication

To ensure that RFP documentation and subsequent information (modifications, clarifications, addenda, Written Questions and Answers, etc.) are directed to the appropriate persons within the offeror's firm, each offeror who intends to participate in this RFP is to provide the following information to the purchasing officer. Prompt, thorough compliance is in the best interest of the offeror. Failure to comply may result in incomplete or delayed communication of addenda or other vital information. Contact information is the responsibility of the offeror. Without the prompt information, any communication shortfall shall reside with the offeror.

- Name of primary contact
- Mailing address of primary contact
- Telephone number of primary contact
- Fax number of primary contact
- E-mail address of primary contact
- Additional contact persons with same information provided as primary contact

This information shall be transmitted via fax or e-mail to:

Ken Scott
Purchasing Division
University of Kentucky
322 Peterson Service Building
Lexington, KY 40506-0005
Phone: (859) 257-9102
Fax: (859) 257-1951
E-mail: kenneth.scott@uky.edu

All communication with the University regarding this RFP shall only be directed to the purchasing officer listed above.

3.3 Pre-Proposal Conference

A pre-proposal conference will be on 09/21/2022 @ 2:00PM via Zoom: https://uky.zoom.us/j/89076241329 to allow prospective contractors an opportunity to ask questions and clarify the University's expectations. This conference provides offerors an opportunity for oral questions.

The following items should be noted in reference to the pre-proposal conference:

- Attendance at the pre-proposal conference is optional**.** At this conference, the scope of services will be discussed in detail and copies of prior year financial reports will be distributed.

- Offerors are encouraged to submit written questions after the conference by the date listed in Section 3.1.

The University will prepare written responses to all questions submitted and make them available to all offerors. The questions and answers will be made part of the RFP and may become part of the contract with the successful contractor. Answers given orally at the conference are not binding.

3.4 Offeror Presentations

All offerors whose proposals are judged acceptable for award may be required to make a presentation to the evaluation committee.

3.5 Preparation of Offers

The offeror is expected to follow all specifications, terms, conditions and instructions in this RFP.

The offeror will furnish all information required by this solicitation.

Proposals should be prepared simply and economically, providing a description of the offeror's capabilities to satisfy the requirements of the solicitation. Emphasis should be on completeness and clarity of content. All documentation submitted with the proposal should be bound in the single volume except as otherwise specified.

An electronic version of the RFP, in .PDF format only, is available through the University of Kentucky Purchasing Division website at: https://purchasing.uky.edu/bid-and-proposal-opportunities.

3.6 Proposed Deviations from the RFP

The stated requirements appearing elsewhere in this RFP shall become a part of the terms and conditions of any resulting contract. Any deviations therefrom must be specifically defined in accordance with the transmittal letter, Section 4.3 (d). If accepted by the University, the deviations shall become part of the contract, but such deviations must not be in conflict with the basic nature of this RFP.

Note: Offerors shall not submit their standard terms and conditions as exceptions to the University's General Terms and Conditions. Each exception to the University's General Terms and Conditions shall be individually addressed.

3.7 Proposal Submission and Deadline

Offeror must provide the following materials prior to 3 p.m. (Lexington, KY time) on the date specified in Section 3.1 and addressed to the purchasing officer listed in Section 3.2:

- **Technical Proposal:** One (1) copy on an electronic storage device (USB) (1 copy per storage device) each clearly marked with the proposal number and name, firm name and what is included (Technical Proposal) and one (1) printed copy in a single package, separate from the Financial Proposal.

- **Financial Proposal:** One (1) copy on an electronic storage device (USB) (1 copy per storage device) each clearly marked with the proposal number and name, firm name and what is included (Financial Proposal) and one (1) printed copy in a single package, separate from the Technical Proposal.

Note: Proposals received after the closing date and time will not be considered. In addition, proposals received via fax or e-mail are not acceptable.

The University of Kentucky accepts deliveries of RFPs Monday through Friday from 8 a.m. to 5 p.m. Lexington, KY time. However, RFPs must be received by 3 p.m. Lexington, KY time on the date specified on the RFP in order to be considered.

Proposals shall be enclosed in sealed envelopes to the above referenced address and shall show on the face of the envelope: the closing time and date specified, the solicitation number and the name and address of the offeror. The technical proposal shall be submitted in a sealed envelope and the financial proposal shall be submitted in a sealed envelope under separate cover. Both sealed envelopes shall have identical information on the cover, with the addition that one will state "Technical Information," and the other, "Financial Proposal."

Note: In accordance with the Kentucky Revised Statute 45A.085, there will be no public opening.

3.8 Modification or Withdrawal of Offer

An offer and/or modification of offer received at the office designated in the solicitation after the exact hour and date specified for receipt will not be considered.

An offer may be modified or withdrawn by written notice before the exact hour and date specified for receipt of offers. An offer also may be withdrawn in person by an offeror or an authorized representative, provided the identity of the person is made known and the person signs a receipt for the offer, but only if the withdrawal is made prior to the exact hour and date set for receipt of offers.

3.9 Acceptance or Rejection and Award of Proposal

The University reserves the right to accept or reject any or all proposals (or parts of proposals), to waive any informalities or technicalities, to clarify any ambiguities in proposals and (unless otherwise specified) to accept any item in the proposal. In case of error in extension or prices or other errors in calculation, the unit price shall govern. Further, the University reserves the right to make a single award, split awards, multiple awards or no award, whichever is in the best interest of the University.

3.10 Rejection

Grounds for the rejection of proposals include (but shall not be limited to):

- Failure of a proposal to conform to the essential requirements of the RFP.
- Imposition of conditions that would significantly modify the terms and conditions of the solicitation or limit the offeror's liability to the University on the contract awarded on the basis of such solicitation.
- Failure of the offeror to sign the University RFP. This includes the Authentication of Proposal and Statement of Non-Collusion and Non-Conflict of Interest statements.
- Receipt of proposal after the closing date and time specified in the RFP.

3.11 Addenda

Any addenda or instructions issued by the purchasing agency prior to the time for receiving proposals shall become a part of this RFP. Such addenda shall be acknowledged in the proposal. No instructions or changes shall be binding unless documented by a proper and duly issued addendum.

3.12 Disclosure of Offeror's Response

The RFP specifies the format, required information and general content of proposals submitted in response to this RFP. The purchasing agency will not disclose any portions of the proposals prior to contract award to anyone outside the Purchasing Division, the University's administrative staff, representatives of the state or federal government (if required) and the members of the committee evaluating the proposals. After a contract is awarded in whole or in part, the University shall have the right to duplicate, use or disclose all proposal data submitted by offerors in response to this RFP as a matter of public record.

Any submitted proposal shall remain valid six (6) months after the proposal due date.

The University shall have the right to use all system ideas, or adaptations of those ideas, contained in any proposal received in response to this RFP. Selection or rejection of the proposal will not affect this right.

3.13 Restrictions on Communications with University Staff

From the issue date of this RFP until a contractor is selected and a contract award is made, offerors are not allowed to communicate about the subject of the RFP with any University administrator, faculty, staff or members of the board of trustees except: the purchasing office representative, any University purchasing official representing the University administration, others authorized in writing by the purchasing office and University representatives during offeror presentations. If violation of this provision occurs, the University reserves the right to reject the offeror's proposal.

3.14 Cost of Preparing Proposal

Costs for developing the proposals and any subsequent activities prior to contract award are solely the responsibility of the offerors. The University will provide no reimbursement for such costs.

3.15 Disposition of Proposals

All proposals become the property of the University. The successful proposal will be incorporated into the resulting contract by reference.

3.16 Alternate Proposals

Offerors may submit alternate proposals. If more than one proposal is submitted, all must be complete (separate) and comply with the instructions set forth within this document. Each proposal will be evaluated on its own merits.

3.17 Questions

All questions should be submitted by either fax or e-mail to the purchasing officer listed in Section 3.2 no later than the date listed in Section 3.1.

3.18 Section Titles in the RFP

Section titles used herein are for the purpose of facilitating ease of reference only and shall not be construed to infer the construction of contractual language.

3.19 No Contingent Fees

No person or selling agency shall be employed or retained or given anything of monetary value to solicit or secure this contract, except bona fide employees of the offeror or bona fide established commercial or selling agencies maintained by the offeror for the purpose of securing business. For breach or violation of this provision, the University shall have the right to reject the proposal, annul the contract without liability, or, at its discretion, deduct from the contract price or otherwise recover the full amount of such commission, percentage, brokerage or contingent fee or other benefit.

3.20 Proposal Addenda and Rules for Withdrawal

Prior to the date specified for receipt of offers, a submitted proposal may be withdrawn by submitting a written request for its withdrawal to the University purchasing office, signed by the offeror. Unless requested by the University, the University will not accept revisions or alterations to proposals after the proposal due date.

3.21 Requirement To Perform Vendor Onboarding and Registration

As a condition of award, and for any renewals performed during the life of the contract, successful Contractor agrees to register their company with PaymentWorks, Inc., the University's vendor onboarding application. Registration information will be provided by the Purchasing Division as part of the award process. During the vendor registration process, successful Contractor agrees to provide any applicable information pertaining to diversity demographics for their company. Further, should any company or diversity information change during the life of the contract, successful Contractor agrees to update this information in PaymentWorks as applicable.

4.0 PROPOSAL FORMAT AND CONTENT

4.1 Proposal Information and Criteria

The following list specifies the items to be addressed in the proposal. Offerors should read it carefully and address it completely and in the order listed to facilitate the University's review of the proposal.

Proposals shall be organized into the sections identified below. The content of each section is detailed in the following pages. It is strongly suggested that offerors use the same numbers for the following content that are used in the RFP.

- Signed Authentication of Proposal and Statement of Non-Collusion and Non-Conflict of Interest Form
- Transmittal Letter
- Executive Summary and Proposal Overview
- Criteria 1 - Offeror Qualifications
- Criteria 2 - Services Defined
- Criteria 3 - Financial Proposal
- Criteria 4 - Evidence of Successful Performance and Implementation Schedule
- Criteria 5 - Other Additional Information

4.2 Signed Authentication of Proposal and Statements of Non-Collusion and Non-Conflict of Interest Form

The Offeror will sign and return the proposal cover sheet and print or type their name, firm, address, telephone number and date. The person signing the offer must initial erasures or other changes. An offer signed by an agent is to be accompanied by evidence of their authority unless such evidence has been previously furnished to the purchasing agency. The signer shall further certify that the proposal is made without collusion with any other person, persons, company or parties submitting a proposal; that it is in all respects fair and in good faith without collusion or fraud; and that the signer is authorized to bind the principal offeror.

4.3 Transmittal Letter

The Transmittal Letter accompanying the RFP shall be in the form of a standard business letter and shall be signed by an individual authorized to legally bind the offeror. It shall include:

- A statement referencing all addenda and written questions, the answers and any clarifications to this RFP issued by the University and received by the offeror (If no addenda have been received, a statement to that effect should be included.).

- A statement that the offeror's proposal shall remain valid for six (6) months after the closing date of the receipt of the proposals.

- A statement that the offeror will accept financial responsibility for all travel expenses incurred for oral presentations (if required) and candidate interviews.

- A statement that summarizes any deviations or exceptions to the RFP requirements and includes a detailed justification for the deviation or exception.

- A statement that identifies the confidential information as described in Section 6.23.

4.4 Executive Summary and Proposal Overview

The Executive Summary and Proposal Overview shall condense and highlight the contents of the technical proposal in such a way as to provide the evaluation committee with a broad understanding of the entire proposal.

As part of the Executive Summary and Proposal Overview, Offeror shall submit with their response a summarized profile describing the demographic nature of their company or organization:

1. When was your organization established and/or incorporated?

2. Indicate whether your organization is classified as local, regional, national, or international.

3. Describe the size of your company in terms of number of employees, gross sales, etc.

4. Is your company certified as small business, minority-owned, women-owned, veteran-owned, disabled-owned, or similar classification?

5. Include other demographic information that you feel may be applicable to the Request for Proposal submission.

6. Offeror shall describe in detail their company's commitment to diversity, equity, and inclusion. Information shall be provided as to the number of diverse individuals that the vendor employees as well as a description of vendors efforts to do business with Diverse Business Enterprises as they conduct their own business. In additional, please indicate the diversity nature of your company as well as ownership race/ethnicity.

Check One Only	**Diverse Business Description (If Diverse Business, determine the classification that is the best description)**	**Internal Code**
	Minority Owned (only)	10
	Veteran Owned and Small Business	100
	Minority and Woman and Small Business	110
	Minority and Woman and Veteran-Owned Business	120
	Minority and Veteran and Small Business	130
	Woman and Veteran and Small Business	140
	Minority and Woman and Veteran-Owned Small Business	150
	Woman Owned (only)	20
	Small Business (only)	30
	Veteran Owned (only)	40
	Minority and Woman Owned	50
	Minority and Small Business	60
	Minority and Veteran-Owned	70
	Woman Owned and Small Business	80
	Woman and Veteran-Owned	90
	Diversity not indicated	999

Race/Ethnicity	**Check One**
Asian	
Black/African American	
Hispanic or Latino	
Native American	
Native Hawaiian/Pacific Islander	
White	
Other	

4.5 Criteria 1 - Offeror Qualifications

The purpose of the Offeror Qualifications section is to determine the ability of the offeror to respond to this RFP. Offerors must describe and offer evidence of their ability to meet each of the qualifications listed below.

Our supply chains and business partnerships are an important aspect of this work. In your proposal, please (A) provide your company's mission and vision relative to sustainability, and (B) how your company, through services, products, and partnerships, will help the University of Kentucky advance specific elements of the Sustainability Strategic Plan.

In addition, please provide the following information:

A. Please provide a brief narrative describing the history of your company. Identify the ownership of your company, Include supplemental information if joint venturing and/or specialty tier vendors/contractor(s).
B. Please provide the Offerors qualifications for performing the work described in this RFP including specification requirements.
C. Describe your personnel and/or subcontractors for support of the present and in the future. Who will be the Project Manager and onsite foreman qualifications for performing the work described in this RFP? Please provide the Project Managers' qualifications for performing the work described in this RFP
D. Provide resumes or a description of the design professionals who will be performing the project design & include portfolios of a minimum of five (5) projects which have been completed which demonstrates their design abilities.

4.6 Criteria 2 – Services Defined

The Contractor should provide documentation of their understanding of the services requested in the RFP and contract documents.

Your proposal should provide for the completion of all work necessary for completion of this RFP.

A. If, there is any section of the work described in this RFP that is excluded by the Offerer, it should be specifically called out as such. It is not the intent of this RFP to exclude a bidder that does not perform all scopes of work contained herin.
B. Explain how your firm/team approaches the design/build process and will work with the University, end users, construction manager, and design team for a successful project.

4.7 Criteria 3 – Financial Proposal

The Financial Summary Form shall contain the complete financial offer made to the University using the format contained in Section 8.0. All financial information must be submitted in a sealed envelope under separate cover.

4.8 Criteria 4 – Evidence of Successful Performance and Implementation Schedule

Provide examples of completed projects, including project cost, schedule, and completion date to demonstrate your firms' capabilities.

Provide a proposed implementation schedule including milestone dates for demolition, start and completion of the work. Include durations for long-lead items and material procurement.

4.9 Criteria 5 – Other Additional Information

The offeror may present any creative approaches that might be appropriate. The offeror may also provide supporting documentation that would be pertinent to this RFP.

Offeror shall describe in detail their company's commitment to diversity, equity and inclusion. Information shall be provided as to the number of diverse individuals that the vendor employees as well as a description of vendors efforts to do business with Diverse Business Enterprises as they conduct their own business.

5.0 EVALUATION CRITERIA PROCESS

A committee of University officials appointed by the Chief Procurement Officer will evaluate proposals and make a recommendation to the Chief Procurement Officer. The evaluation will be based upon the information provided in the proposal, additional information requested by the University for clarification, information obtained from references and independent sources and oral presentations (if requested).

The evaluation of responsive proposals shall then be completed by an evaluation team, which will determine the ranking of proposals. Proposals will be evaluated strictly in accordance with the requirements set forth in this solicitation, including any addenda that are issued. The University will award the contract to the responsible offeror whose proposal is determined to be the most advantageous to the University, taking into consideration the evaluation factors set forth in this RFP.

The evaluation of proposals will include consideration of responses to the list of criteria in Section 4.0. Offerors must specifically address all criteria in their response. Any deviations or exceptions to the specifications or requirements must be described and justified in a transmittal letter. Failure to list such exceptions or deviations in the transmittal letter may be considered sufficient reason to reject the proposal.

The relative importance of the criteria is defined below:

Primary Criteria

- Offeror Qualifications
- Services Defined
- Financial Proposal
- Evidence of Successful Performance and Implementation

Secondary Criteria

- Other Additional Services

The University will evaluate proposals as submitted and may not notify offerors of deficiencies in their responses.

Proposals must contain responses to each of the criteria, listed in Section 4 even if the offeror's response cannot satisfy those criteria. A proposal may be rejected if it is conditional or incomplete in the judgment of the University.

6.0 SPECIAL CONDITIONS

6.1 Contract Term

The contract term will be for the duration of the project as presented in by the offeror in Section 4.9 of this document.

6.2 Effective Date

The effective date of the contract shall be the date upon which the parties execute it and all appropriate approvals, including that of the Commonwealth of Kentucky Government Contracts Review Committee, have been received.

6.3 Competitive Negotiation

It is the intent of the RFP to enter into competitive negotiation as authorized by KRS 45A.085.

The University will review all proposals properly submitted. However, the University reserves the right to request necessary modifications, reject all proposals, reject any proposal that does not meet mandatory requirement(s) or cancel this RFP, according to the best interests of the University.

Offeror(s) selected to participate in negotiations may be given an opportunity to submit a Best and Final Offer to the purchasing agency. All information-received prior to the cut-off time will be considered part of the offeror's Best and Final Offer.

The University also reserves the right to waive minor technicalities or irregularities in proposals providing such action is in the best interest of the University. Such waiver shall in no way modify the RFP requirements or excuse the offeror from full compliance with the RFP specifications and other contract requirements if the offeror is awarded the contract.

6.4 Appearance Before Committee

Any, all or no offerors may be requested to appear before the evaluation committee to explain their proposal and/or to respond to questions from the committee concerning the proposal. Offerors are prohibited from electronically recording these meetings. The committee reserves the right to request additional information.

6.5 Additions, Deletions or Contract Changes

The University reserves the right to add, delete, or change related items or services to the contract established from this RFP. No modification or change of any provision in the resulting contract shall be made unless such modification is mutually agreed to in writing by the contractor and the Chief Procurement Officer and incorporated as a written modification to the contract. Memoranda of understanding and correspondence shall not be interpreted as a modification to the contract.

6.6 Contractor Cooperation in Related Efforts

The University reserves the right to undertake or award other contracts for additional or related work to other entities. The contractor shall fully cooperate with such other contractors and University employees and carefully fit its work to such additional work. The contractor shall not commit or permit any act which will interfere with the performance of work by any other contractor or by University employees. This clause shall be included in the contracts of all contractors with whom this contractor will be required to cooperate. The University shall equitably enforce this clause to all contractors to prevent the imposition of unreasonable burdens on any contractor.

6.7 Entire Agreement

The RFP shall be incorporated into any resulting contract. The resulting contract, including the RFP and those portions of the offeror's response accepted by the University, shall be the entire agreement between the parties.

6.8 Governing Law

The contractor shall conform to and observe all laws, ordinances, rules and regulations of the United States of America, Commonwealth of Kentucky and all other local governments, public authorities, boards or offices relating to the property or the improvements upon same (or the use thereof) and will not permit the same to be used for any illegal or immoral purposes, business or occupation. The resulting contract shall be governed by Kentucky law and any claim relating to this contract shall only be brought in the Franklin Circuit Court in accordance with KRS 45A.245.

6.9 Kentucky's Personal Information Security and Breach Investigation Procedures and Practices Act

To the extent Company receives Personal Information as defined by and in accordance with Kentucky's Personal Information Security and Breach Investigation Procedures and Practices Act, KRS 61.931, 61.932 and 61.933 (the "Act"), Company shall secure and protect the Personal Information by, without limitation: (i) complying with all requirements applicable to non-affiliated third parties set forth in the Act; (ii) utilizing security and breach investigation procedures that are appropriate to the nature of the Personal Information disclosed, at least as stringent as University's and reasonably designed to protect the Personal Information from unauthorized access, use, modification, disclosure, manipulation, or destruction; (iii) notifying University of a security breach relating to Personal Information in the possession of Company or its agents or subcontractors within seventy-two (72) hours of discovery of an actual or suspected breach unless the exception set forth in KRS 61.932(2)(b)2 applies and Company abides by the requirements set forth in that exception; (iv) cooperating with University in complying with the response, mitigation, correction, investigation, and notification requirements of the Act , (v) paying all costs of notification, investigation and mitigation in the event of a security breach of Personal Information suffered by Company; and (vi) at University's discretion and direction, handling all administrative functions associated with notification, investigation and mitigation.

6.10 Termination for Convenience

The University of Kentucky, Purchasing Division, reserves the right to terminate the resulting contract without cause with a thirty (30) day written notice. Upon receipt by the contractor of a "notice of termination," the contractor shall discontinue all services with respect to the applicable contract. The cost of any agreed upon services provided by the contractor will be calculated at the agreed upon rate prior to a "notice of termination" and a fixed fee contract will be pro-rated (as appropriate).

6.11 Termination for Non-Performance

Default

The University may terminate the resulting contract for non-performance, as determined by the University, for such causes as:

- Failing to provide satisfactory quality of service, including, failure to maintain adequate personnel, whether arising from labor disputes, or otherwise any substantial change in ownership or proprietorship of the Contractor, which in the opinion of the University is not in its best interest, or failure to comply with the terms of this contract;

- Failing to keep or perform, within the time period set forth herein, or violation of, any of the covenants, conditions, provisions or agreements herein contained;

- Adjudicating as a voluntarily bankrupt, making a transfer in fraud of its creditors, filing a petition under any section from time to time, or under any similar law or statute of the United States or any state thereof, or if an order for relief shall be entered against the Contractor in any proceeding filed by or against contractor thereunder. In the event of any such involuntary bankruptcy proceeding being instituted against the Contractor, the fact of such an involuntary petition being filed shall not be considered an event of default until sixty (60) days after filing of said petition in order that Contractor might during that sixty (60) day period have the opportunity to seek dismissal of the involuntary petition or otherwise cure said potential default; or

- Making a general assignment for the benefit of its creditors, or taking the benefit of any insolvency act, or if a permanent receiver or trustee in bankruptcy shall be appointed for the Contractor.

Demand for Assurances

In the event the University has reason to believe Contractor will be unable to perform under the Contract, it may make a demand for reasonable assurances that Contractor will be able to timely perform all obligations under the Contract. If Contractor is unable to provide such adequate assurances, then such failure shall be an event of default and grounds for termination of the Contract.

Notification

The University will provide ten (10) calendar days written notice of default. Unless arrangements are made to correct the non-performance issues to the University's satisfaction within ten (10) calendar days, the University may terminate the contract by giving forty-five (45) days notice, by registered or certified mail, of its intent to cancel this contract.

6.12 Funding Out

The University may terminate this contract if funds are not appropriated or are not otherwise available for the purpose of making payments without incurring any obligation for payment after the date of termination, regardless of the terms of the contract. The University shall provide the contractor thirty (30) calendar days' written notice of termination under this provision.

6.13 Prime Contractor Responsibility

Any contracts that may result from the RFP shall specify that the contractor(s) is/are solely responsible for fulfillment of the contract with the University.

6.14 Assignment and Subcontracting

The Contractor(s) may not assign or delegate its rights and obligations under any contract in whole or in part without the prior written consent of the University. Any attempted assignment or subcontracting shall be void.

6.15 Permits, Licenses, Taxes

The contractor shall procure all necessary permits and licenses and abide by all applicable laws, regulations and ordinances of all federal, state and local governments in which work under this contract is performed.

The contractor must furnish certification of authority to conduct business in the Commonwealth of Kentucky as a condition of contract award. Such registration is obtained from the Secretary of State, who will also provide the certification thereof. However, the contractor need not be registered as a prerequisite for responding to the RFP.

The contractor shall pay any sales, use, personal property and other tax arising out of this contract and the transaction contemplated hereby. Any other taxes levied upon this contract, the transaction or the equipment or services delivered pursuant hereto shall be the responsibility of the contractor.

The contractor will be required to accept liability for payment of all payroll taxes or deductions required by local and federal law including (but not limited to) old age pension, social security or annuities.

6.16 Attorneys' Fees

In the event that either party deems it necessary to take legal action to enforce any provision of the contract and in the event that the University prevails, the contractor agrees to pay all expenses of such action including attorneys' fees and costs at all stages of litigation.

6.17 Royalties, Patents, Copyrights and Trademarks

The Contractor shall pay all applicable royalties and license fees. If a particular process, products or device is specified in the contract documents and it is known to be subject to patent rights or copyrights, the existence of such rights shall be disclosed in the contract documents and the Contractor is responsible for payment of all associated royalties. To the fullest extent permitted by law the Contractor shall indemnify, hold the University harmless, and defend all suits, claims, losses, damages or liability resulting from any infringement of patent, copyright, and trademark rights resulting from the incorporation in the Work or device specified in the Contract Documents.

Unless provided otherwise in the contract, the Contractor shall not use the University's name nor any of its trademarks or copyrights, although it may state that it has a Contract with the University.

6.18 Indemnification

The contractor shall indemnify, hold and save harmless the University, its affiliates and subsidiaries and their officers, agents and employees from losses, claims, suits, actions, expenses, damages, costs (including court costs and attorneys' fees of the University's attorneys), all liability of any nature or kind arising out of or relating to the Contractor's response to this RFP or its performance or failure to perform under the contract awarded from this RFP. This clause shall survive termination for as long as necessary to protect the University.

6.19 Insurance

The successful Contractor shall procure and maintain, at its expense, the following minimum insurance coverages insuring all services, work activities and contractual obligations undertaken in this contract. These insurance policies must be with insurers acceptable to the University.

COVERAGES	LIMITS
Workers' Compensation	Statutory Requirements (Kentucky)
Employer's Liability	$500,000/$500,000/$500,000
Commercial General Liability including operations/completed operations, products and contractual liability (including defense and investigation costs), and this contract	$1,000,000 each occurrence (BI & PD combined) $2,000,000 Products and Completed Operations Aggregate
Business Automobile Liability covering owned, leased, or non-owned autos	$1,000,000 each occurrence (BI & PD combined)

The successful contractor agrees to furnish Certificates of Insurance for the above described coverages and limits to the University of Kentucky, Purchasing Division. The University, its trustees and employees must be added as additional insured on the Commercial General Liability policy with regard to the scope of this solicitation. Any deductibles or self-insured retention in the above-described policies must be paid and are the sole responsibility of the contractor. Coverage is to be primary and non-contributory with other coverage (if any) purchased by the University. All of these required policies must include a Waiver of Subrogation (except Workers' Compensation) in favor of the University, its trustees and employees.

6.20 Method of Award

It is the intent of the University to award a contract to the qualified offeror whose offer, conforming to the conditions and requirements of the RFP, is determined to be the most advantageous to the University, cost and other factors considered.

Notwithstanding the above, this RFP does not commit the University to award a contract from this solicitation. The University reserves the right to reject any or all offers and to waive formalities and minor irregularities in the proposal received.

6.21 Reciprocal Preference

In accordance with KRS 45A.494, a resident offeror of the Commonwealth of Kentucky shall be given a preference against a nonresident offeror. In evaluating proposals, the University will apply a reciprocal preference against an offeror submitting a proposal from a state that grants residency preference equal to the preference given by the state of the nonresident offeror. Residency and non-residency shall be defined in accordance with KRS 45A.494(2) and 45A.494(3), respectively. Any offeror claiming Kentucky residency status shall submit with its proposal a notarized affidavit affirming that it meets the criteria as set forth in the above reference statute.

6.22 Confidentiality

The University recognizes an offeror's possible interest in preserving selected information and data included in the proposal; however, the University must treat such information and data as required by the Kentucky Open Records Act, KRS 61.870, et seq.

Information areas which normally might be considered proprietary, and therefore confidential, shall be limited to individual personnel data, customer references, formulae and company financial audits which, if disclosed, would permit an unfair advantage to competitors. If a proposal contains information in these areas and the offeror declares them to be proprietary in nature and not available for public disclosure, the offeror shall declare in the Transmittal Letter the inclusion of proprietary information and shall noticeably label as confidential or proprietary each sheet containing such information. Proposals containing information declared by the offeror to be proprietary or confidential, either wholly or in part, outside the areas listed above may be deemed non-responsive and may be rejected.

The University's General Counsel shall review each offeror's information claimed to be confidential and, in consultation with the offeror (if needed), make a final determination as to whether or not the confidential or proprietary nature of the information or data complies with the Kentucky Open Records Act.

6.23 Conflict of Interest

This Request for Proposal and resulting Contract are subject to provisions of the Kentucky Revised Statutes regarding conflict of interest and the University of Kentucky's Ethical Principles and Code of Conduct (www.uky.edu/Legal/ethicscode.htm). When submitting and signing a proposal, an offeror is certifying that no actual, apparent or potential conflict of interest exists between the interests of the University and the interests of the offeror. A conflict of interest (whether contractual, financial, organizational or otherwise) exists when any individual, contractor or subcontractor has a direct or indirect interest because of a financial or pecuniary interest, gift or other activities or relationships with other persons (including business, familial or household relationships) and is thus unable to render or is impeded from rendering impartial assistance or advice, has impaired objectivity in performing the proposed work or has an unfair competitive advantage.

Questions concerning this section or interpretation of this section should be directed to the University purchasing officer identified in this RFP.

6.24 Copyright Ownership and Title to Designs and Copy

The contractor and University intend this RFP to result in a contract for services, and both consider the products and results of the services to be rendered by the contractor hereunder to be a work made for hire. The contractor acknowledges and agrees that the work and all rights therein, including (without limitation) copyright, belongs to and shall be the sole and exclusive property of the University. For any work that is not considered a work made for hire under applicable law, title and copyright ownership shall be assigned to the University.

Title to all dies, type, cuts, artwork, negatives, positives, color separations, progressive proofs, plates, copy and any other requirement not stated herein required for completion of the finished product for use in connection with any University job shall be the property of and owned by the University. Such items shall be returned to the appropriate department upon completion and/or delivery of work unless otherwise authorized by the University. In the event that time of return is not specified, the contractor shall return all such items to the appropriate University department within one week of delivery.

6.25 University Brand Standards

The contractor must adhere to all University of Kentucky Brand Standards. University Brand Standards are maintained by the University Public Relations Office (UKPR) and can be viewed at http://www.uky.edu/prmarketing/brand-standards. Non-adherence to the standards can have a penalty up to and including contract cancellation. Only the UKPR Director or designee can approve exceptions to the University standards.

Graphics standards for the UK HealthCare areas are governed by UK HealthCare Clinical Enterprise Graphic Standards, found at: https://ukhealthcare.uky.edu/staff/brand-strategy.

Contractor warrants that its products or services provided hereunder will be in compliance with all applicable Federal disabilities laws and regulations, including without limitation the accessibility requirements of Section 255 of the Federal Telecommunications Act of 1996 (47 U.S.C. § 255) and Section 508 of the Rehabilitation Act of 1973, as amended (29 U.S.C. 794d), and its implementing regulations set forth at Title 36, Code of Federal Regulations, Part 1194. For purposes of clarity, updated regulations under Section 508 standards now incorporate WCAG 2.0, and for purposes of this agreement WCAG 2.0 Level AA compliance is expressly included. Contractor agrees to promptly respond to, resolve and remediate any complaint regarding accessibility of products or services in a timely manner and provide an updated version to University at no cost. If deficiencies are identified, University reserves the right to request from Contractor, a timeline by which accessibility standards will be incorporated into the products or services provided by Contractor and shall provide such a timeline within a commercially reasonable duration of time. Failure to comply with these requirements shall constitute a material breach of this Agreement and shall be grounds for termination of this Agreement.

Where any customized web services are provided, Contractor represents that it has reviewed the University's Web Policy and all products or services will comply with its published standards.

Contractor will provide University with a current Voluntary Product Accessibility Template (VPAT) for any deliverable(s). If none is available, Vendor will provide sufficient information to reasonably assure the University that the products or services are fully compliant with current requirements.

6.26 Payment Terms

The University adheres to a strategic approach regarding payables management based on risk minimization, processing costs, and industry best practices. As such, suppliers and individuals doing business with the University will be paid based on the following protocol:

1. The University utilizes Payment Plus (e-payables) as its primary default form of payment. By enrolling in Payment Plus, suppliers can receive payments immediately (all invoices will be paid immediately upon confirmation of goods receipt and invoice). The process is electronic and the supplier receives real-time payment notices. Additional information regarding Payment Plus (and enrollment form) can be found at: https://www.uky.edu/ufs/payment-plus-supplier-enrollment-form.

2. Payments by check. Payment terms for check payments are Net-30.

3. Individuals receiving payments from the University that require ACH direct payments will only be processed under special circumstances as approved by the Controller's office. Payment terms for ACH are Net-40.

7.0 SCOPE OF SERVICES

The work for this project will consist of preparing and providing complete design services, preliminary and final drawings, technical specifications, construction documents and cost estimates. Also required will be **quality control testing,** construction program inspections, and completed project documentation.

It shall be the responsibility of the successful contractor to prepare and submit all required documents to the proper governing authorities; to complete all permit applications, and to obtain all appropriate approvals required by the current regulations of the governing authorities.

The contractor shall be responsible for the quality of the products and construction of this project. All aspects of material and labor shall be observed and documented during construction to verify compliance with the provisions of this RFP.

7.1 Detailed Services Defined

1. Provide and install a Pre-Engineered Metal Building in accordance with Spec Section 133419.
2. The new Track facility consists of the primary structure of the Pre-Engineered Metal building and the new Entrance and bathrooms. The new entrance and bathrooms in NOT included in the PEMB package. This work will be bid separately and will follow the erection of the PEMB.
3. Sitework, Concrete foundations and slabs as well as mechanical, electrical and plumbing is NOT included in this bid package. These scopes of work will be bid separately.
4. The PEMB package WILL include the metal wall and soffit panels for the entire project. The metal panel MATERIAL required for the new entrance and bathrooms will be provided under the PEMB package. The installation of the metal wall panels at the new entrance will be by a future bid package.

7.2 Additional Special Services and Requirements

a) Provide detailed construction drawings and after project as-builts for your scope of work.

b) Provide all layout and supervision required to perform the work.

c) Provide detailed site logistics plan for needed material/heavy equipment storage, field access needs, and coordination requirements with stadium project Construction Management Company (Congleton-Hacker).

d) Provide maintenance instructions, as-built drawings, clean up and demobilization

e) Provide a third-party warranty as described in Section 6.15, Insurance Requirements, of this RFP.

8.0 FINANCIAL OFFER SUMMARY

8.1 Base Price

Price based on basis of design.

The Bidder agrees to furnish all labor, materials, supplies and services required to complete the Work, for the above referenced Project, for the Capital Construction Procurement Section, University of Kentucky, as described in the RFP including Attachments and as modified by the Addenda listed above.

FOR THE LUMP SUM OF_____
(USE WORDS)
_____DOLLARS AND_____CENTS.
(USE WORDS) (USE WORDS)

($_____)
(USE FIGURES)

8.2 Alternates

All Alternates will be Additive. Alternates are defined by Spec Section 012300 – Alternates as well as drawing sheets A201-A204 and A352 and A521. Please include a separate price for each item below:

1) $_____ Alternate No. 1: Band Storage

2) $_____ Alternate No. 2: Roof Eave on East of PEMB

3) $_____ Alternate No. 3: Brick Wainscot on PEMB

4) $_____ Alternate No. 4: Air Conditioning at Track Practice Area

5) $_____ Alternate No. 5: Promenade Sidewalk

6) $_____ Alternate No. 6: UK Logo Signs

7) $_____ Alternate No. 7: Canopy Back Lighting.

8.3 Optional and Unit Pricing

Please provide Optional Pricing for items identified in Section 4.6, question 8 – Services Defined

Prices shall include the furnishing of all labor, materials, supplies and services and shall include all items of cost, overhead and profit for the Contractor and any subcontractor involved.

Also, provide **Unit Pricing** that may apply for this project. Unit Pricing shall be used uniformly without modifications for either additions or deductions. The Unit Prices as established shall be used to determine the equitable adjustment of the Contract Price in connection with changes, deletions or extra work performed under the Contract and the "Rules of Measurement" set forth in the General Conditions shall govern.

All Offerors will be required to complete and submit the following information. The information requested in this submittal is required to assist the University in determining contractor responsibility to complete the project being bid.

DESCRIPTION OF WORK	OPTIONS PRICING and UNIT PRICE

C:_REVIT_Local\22157 (UK INDOOR TRACK AND FIELD) STR - RVT21_williams7LN5N.rvt

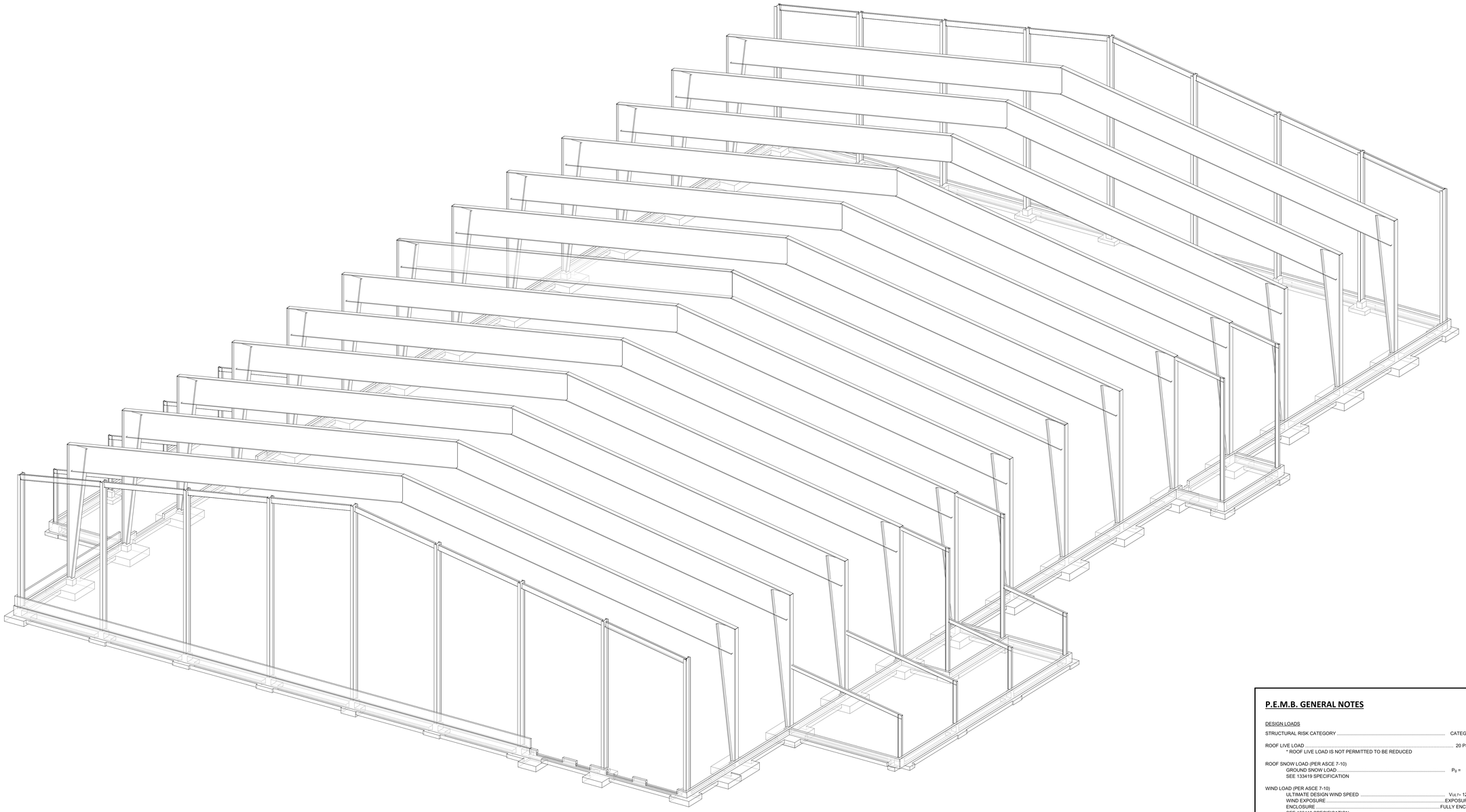

A
S-101
DIAGRAMATIC ISOMETRIC VIEW

STRUCTURAL ABBREVIATIONS

APA	AMERICAN PLYWOOD ASSOCIATION	GALV	GALVANIZED
ARCH	ARCHITECTURAL	HORIZ	HORIZONTAL
ARU	AIR RECYCLING UNIT	HSS	HOLLOW STRUCTURAL SECTION
B.L.E.	BRICK LEDGE ELEVATION	I.C.F.	INSULATED CONCRETE FORM
BOT	BOTTOM	LBS	POUNDS
BTWN	BETWEEN	L.D.H.	LONG DIMENSION HORIZONTAL
CANT	CANTILEVER BEAM	L.D.V.	LONG DIMENSION VERTICAL
C.F.S.	COLD-FORMED STEEL	LVL	LAMINATED VENEER LUMBER
C.I.P.	CAST-IN-PLACE	MANUF.	MANUFACTURER
CJP	COMPLETE JOINT PENETRATION	MAX	MAXIMUM
CLR	CLEAR	MECH	MECHANICAL
C.M.U.	CONCRETE MASONRY UNIT	M.E.P.	MECHANICAL/ELECTRICAL/PLUMBING
COL	COLUMN	MIN	MINIMUM
CONC	CONCRETE	N.S.	NEAR SIDE
CONT	CONTINUOUS	N.T.S.	NOT TO SCALE
D	DEEP	O.C.	ON CENTER
DET	DETAIL	O.P.H.	OPPOSITE HAND
D.G.A.	DENSE GRADED AGGREGATE	P.A.F.	POWDER ACTUATED FASTENER
DWGS	DRAWINGS	P.E.M.B.	PRE-ENGINEERED METAL BUILDING
EA	EACH	PJP	PARTIAL JOINT PENETRATION
E.F.	EACH FACE	PL	PLATE
ELEV	ELEVATION	R	RADIUS
EMBED	MINIMUM EMBEDMENT DEPTH INTO SUBSTRATE	REINF	REINFORCEMENT
E.O.S.	EDGE OF SLAB	R.T.U.	ROOF TOP UNIT (MECHANICAL)
E.W.	EACH WAY	S.C.	SLIP CRITICAL
EX	EXISTING	SIM	SIMILAR
EXP	EXPANSION	S.O.G.	SLAB ON GRADE
F.F.E.	FINISHED FLOOR ELEVATION	SP	COLUMN SPLICE
F.R.C.	FIBER REINFORCED CONCRETE	S.S.	STAINLESS STEEL
F.R.P.	FIBER REINFORCED POLYMER	STD	STANDARD
F.R.T.	FIRE RESISTANCE TREATED	TYP	TYPICAL
F.S.	FAR SIDE	U.N.O.	UNLESS NOTED OTHERWISE
FTG	FOOTING	VERT	VERTICAL
F.V.	FIELD VERIFY	W	WIDE
GA	GAUGE	W.W.F.	WELDED WIRE FABRIC

MATERIAL LEGEND

	NATIVE EARTH / ENGINEERED FILL		RAISED FLOOR
	CONCRETE		RECESSED FLOOR
	DENSE GRADED AGGREGATE (DGA)		C.M.U. "IN SECTION"
	MASONRY GROUT "IN SECTION"		BRICK "IN SECTION"

NOTE:
3D VIEWS SHOWN ON THIS SHEET ARE FOR REFERENCE ONLY.
3D STRUCTURAL MODEL IS NOT GUARANTEED TO BE COMPLETE OR EXACT.
SEE ALL OTHER SHEETS FOR ACCURATE STRUCTURAL PLANS AND DETAILS.

P.E.M.B. GENERAL NOTES

DESIGN LOADS

STRUCTURAL RISK CATEGORY ..... CATEGORY III

ROOF LIVE LOAD ..... 20 PSF MIN*
* ROOF LIVE LOAD IS NOT PERMITTED TO BE REDUCED

ROOF SNOW LOAD (PER ASCE 7-10)
GROUND SNOW LOAD ..... P_g = 15 PSF
SEE 133419 SPECIFICATION

WIND LOAD (PER ASCE 7-10)
ULTIMATE DESIGN WIND SPEED ..... V_{ULT} = 120 MPH
WIND EXPOSURE ..... EXPOSURE C
ENCLOSURE ..... FULLY ENCLOSED
SEE 133419 SPECIFICATION

EARTHQUAKE DESIGN DATA
COUNTY / STATE ..... FAYETTE / KENTUCKY
MAPPED SHORT PERIOD RESPONSE ACCELERATION ..... Ss = 0.188
MAPPED 1 SECOND PERIOD RESPONSE ACCELERATION ..... S1 = 0.091
SITE CLASS ..... CLASS C
DESIGN SHORT PERIOD SPECTRAL RESPONSE COEFFICIENT ..... Sds = 0.150
DESIGN 1 SECOND PERIOD SPECTRAL RESPONSE COEFFICIENT ..... Sd1 = 0.103
SEISMIC DESIGN CATEGORY ..... CATEGORY B
BASIC STRUCTURAL SYSTEM ..... BUILDING FRAME SYSTEM
SEISMIC RESISTING SYSTEM ..... SEE PEMB DRAWINGS FOR STEEL SEISMIC RESISTING SYSTEM
SEE 133419 SPECIFICATION

PRE-ENGINEERED STEEL BUILDING CONSTRUCTION

1. PRE-ENGINEERED BUILDING CONTRACTOR IS SOLELY RESPONSIBLE FOR THE DESIGN AND INSTALLATION OF THE BUILDING STRUCTURE.
2. CONTRACTOR SHALL SUBMIT DRAWINGS AND CALCULATIONS SIGNED AND SEALED BY A PROFESSIONAL ENGINEER LICENSED IN THE STATE OF KENTUCKY FOR REVIEW BY THE ARCHITECT AND ENGINEER.
3. STRUCTURE SHALL BE DESIGNED FOR:
   A. STRUCTURE SELFWEIGHT (INCLUDING ROOF SYSTEM).
   B. COLLATERAL DEAD LOAD OF 8 PSF.
   C. SNOW, WIND, EARTHQUAKE AND ROOF LIVE LOAD AS SHOWN IN "DESIGN LOADS" SECTION.
   D. ROOF TOP MECHANICAL UNITS, FANS, AND ANY OTHER NOTABLE MECHANICAL EQUIPMENT (COORDINATE WITH MECHANICAL CONTRACTOR).
4. LIMIT BUILDING DRIFT TO H/180 UNDER LOAD COMBINATIONS THAT INCLUDE WIND. DRIFT LIMITATIONS FOR SEISMIC LOADING ARE DEFINED IN THE KENTUCKY BUILDING CODE.
5. IN ADDITION TO THE BUILDING FRAME, THE PRE-ENGINEERED BUILDING CONTRACTOR SHALL DESIGN, PROVIDE, AND INSTALL:
   A. ANCHOR BOLTS (DIAMETER SELECTION FOR SHEAR AND TENSION)
   B. FRAMING FOR WALL OPENINGS INCLUDING, BUT NOT LIMITED TO: MAN DOORS, OVERHEAD DOORS, LOUVERS, WINDOWS, VARIOUS MECHANCIAL OPENINGS, ETC.
   C. FRAMING FOR ROOF OPENINGS
6. COLUMN PIERS AND FOOTINGS ARE DESIGNED ASSUMING PINNED COLUMN BASES. FIXED COLUMN BASES ARE NOT PERMITTED.
7. THE COMPLETE FOUNDATION SYSTEM (INCLUDING TENSION TIES) MUST BE INSTALLED PRIOR TO ERECTING THE STEEL STRUCTURE.
8. METAL ROOFING SHALL BE ASSUMED TO HAVE ZERO CAPACITY FOR DIAPHRAGM ACTION.
9. DEFLECTION OF FRAME BEAM SHALL NOT EXCEED L/180 DUE TO TOTAL LOAD AND L/240 DUE TO LIVE LOAD, WHERE L IS THE DISTANCE FROM EAVE TO EAVE.

8/31/2022 3:22:49 PM

JRA architects
3225 Summit Square Place, Suite 200
Lexington, Kentucky 40509
859.252.6781

NOT FOR CONSTRUCTION

BROWN+KUBICAN
STRUCTURAL ENGINEERS
546 East Main Street, Suite 300
Lexington, KY 40508
859-543-0933
www.brownkubican.com

RFP 2 DRAWINGS

UK INDOOR TRACK FACILITY
UNIVERSITY OF KENTUCKY
700 SPORTS CENTER DRIVE LEXINGTON, KENTUCKY 40506

STRUCTURAL

PROJECT	202258
DATE	08/31/2022

REVISIONS

No.	Description	Date

JRA ARCHITECTS HAS RETAINED AN ELECTRONIC VERSION OF THESE DRAWINGS. THE CLIENT AGREES NOT TO REUSE THESE DRAWINGS - IN ELECTRONIC OR ANY OTHER FORMAT - IN WHOLE, OR IN PART, FOR ANY PURPOSE OTHER THAN FOR THE PROJECT. THE CLIENT AGREES NOT TO TRANSFER THESE ELECTRONIC FILES TO OTHERS WITHOUT THE PRIOR WRITTEN CONSENT OF THE ARCHITECT. THE CLIENT FURTHER AGREES TO WAIVE ALL CLAIMS AGAINST THE ARCHITECT RESULTING IN ANY WAY FROM THE USE OF THESE ELECTRONIC FILES TO OR REUSE OF THE ELECTRONIC FILES FOR ANY OTHER PROJECT BY ANYONE OTHER THAN THE ARCHITECT.

P.E.M.B. GENERAL NOTES & ISOMETRIC VIEWS

S-101

COPYRIGHT 2022 - JRA, INC.

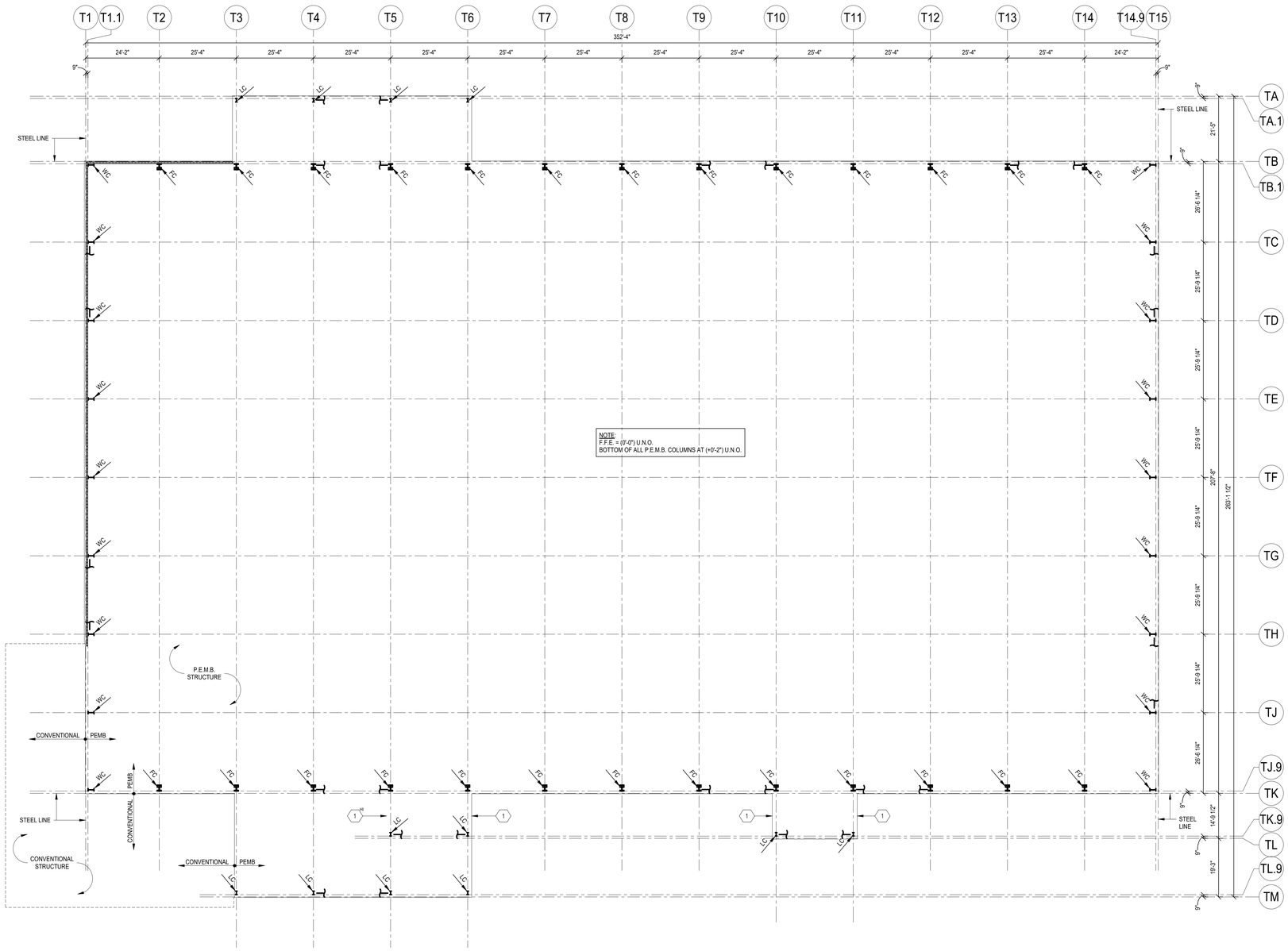

A S-201 P.E.M.B. COLUMN LAYOUT PLAN
1/16" = 1'-0"

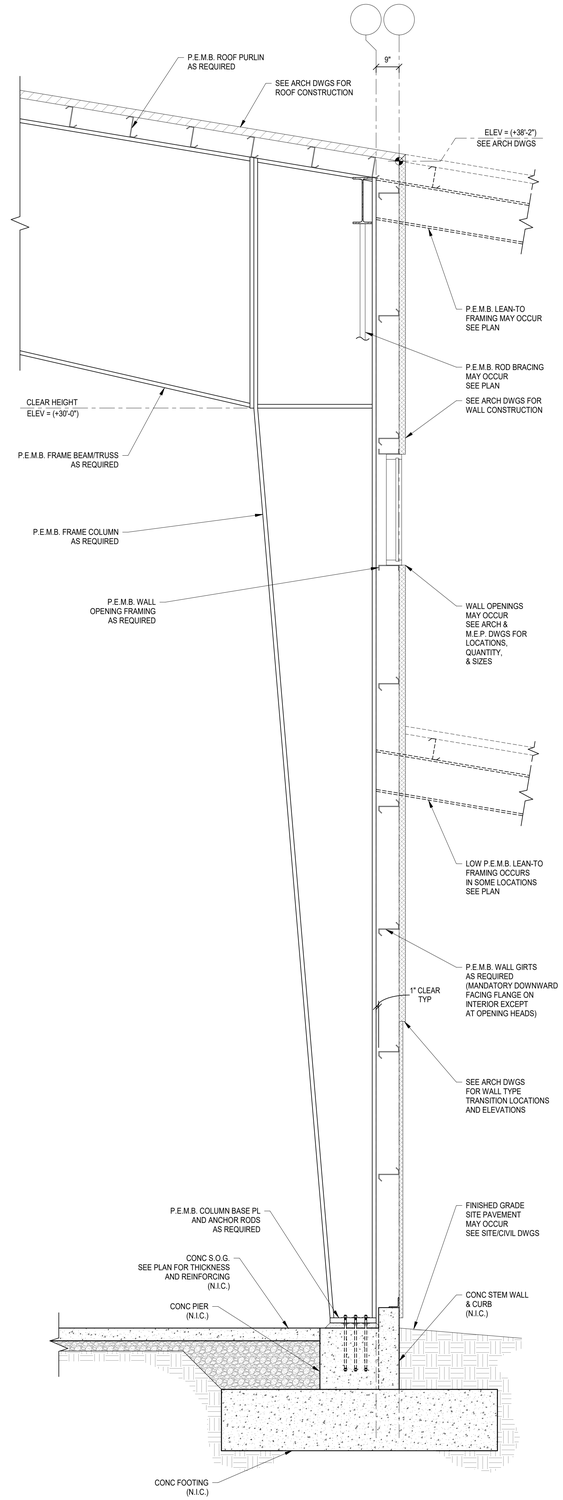

B S-201 TYPICAL GENERIC P.E.M.B. SECTION
NOT TO SCALE

P.E.M.B. FRAMING PLAN NOTES

1. WALL GIRTS ARE NOT SHOWN ON PLANS AND ROOF PURLINS ARE DIAGRAMMATIC. CONTRACTOR SHALL FRAME OPENINGS AND SPACE AS REQUIRED TO ACCOMMODATE ROOF AND WALL SPANS.
2. TYPICAL WALL GIRTS SHALL BE 8" DEEP, LOCATED TO THE OUTSIDE OF FRAME. WIND, AND LEAN-TO COLUMNS. CONTRACTOR SHALL FRAME AROUND ALL WINDOWS, DOORS, OVERHEAD DOORS, LOUVERS, MECHANICAL PENETRATIONS, ETC. WALL GIRTS AT OPENINGS SHALL HAVE A FLAT 8" DEEP FACE ON (3) SIDES OF THE ROUGH OPENINGS FOR DOORS AND (4) SIDES FOR ALL OTHER OPENINGS, U.N.O. ALL OPENINGS MAY NOT BE SHOWN ON STRUCTURAL DRAWINGS. COORDINATE W/ ARCHITECTURAL AND M.E.P. DRAWINGS FOR ADDITIONAL OPENINGS AND/OR EQUIPMENT LOCATIONS.
3. SEE GENERAL NOTES AND SPECIFICATIONS FOR UNIFORM LOADING.
4. SUPPLEMENTAL FRAMING AT ROOF LEVEL FOR THE BRACING OF THE TOP OF THROWING FENCE POSTS AND THROWING NET POSTS IS DIAGRAMTIC AND SHALL BE DETERMINED BY THE P.E.M.B. MANUFACTURER. AT EACH LOCATION WHERE A THROWING FENCE POST OCCURS, SUPPLEMENTAL FRAMING SHALL BE DESIGNED FOR A CONNECTION AND LOADING AS NOTED IN DETAIL B/S-202.
5. P.E.M.B. FRAME BEAMS AND COLUMNS ON GRIDLINES T12, T13 AND T14, AND P.E.M.B. SPANDREL BEAMS AND WIND COLUMNS ON GRIDLINE T14.9 TO THE PLAN-SOUTH OF GRIDLINE TF SHALL BE DESIGNED FOR MIRRORED LOADING CAUSED BY THROWING FENCE POSTS TO THE PLAN-NORTH OF GRIDLINE TF FOR FUTURE ADDITION OF THROWING FENCE POSTS TO THE PLAN-SOUTH OF GRIDLINE TF.

P.E.M.B. FRAMING LEGEND

= X-BRACING (ROD BRACING) LOCATIONS.

FC = P.E.M.B. FRAME COLUMN.
WC = P.E.M.B. WIND COLUMN.
LC = P.E.M.B. LEAN-TO FRAME COLUMN.
RP = P.E.M.B. ROOF PURLIN.
FB = P.E.M.B. FRAME BEAM. (P.E.M.B. TRUSS MAY OCCUR FOR MEMBERS SPANNING FROM GRID TB.1 TO TJ.9)
SB = P.E.M.B. SPANDREL BEAM.
SF = P.E.M.B. SUPPLEMENTAL FRAMING.
BB = P.E.M.B. BEAM FLANGE BRACING.
TP = THROWING FENCE POST. COORDINATE W/ ARCH DWGS.
12 / 2 = ROOF SLOPE.
N.I.C. = NOT IN CONTRACT

P.E.M.B. TAG NOTES

1. LARGE ARU LOUVER LOCATED IN WALL. BRACING NOT ALLOWED IN BAY. COORDINATE W/ ARCH & MEP DWGS.
2. PRE-MANUFACTURED CANOPY. COORDINATE CANOPY SUPPORT AND LOADS W/ MANUFACTURER AND ARCH DWGS.
3. OVERHANG CONSTRUCTION BY P.E.M.B. MANUFACTURER. SEE ARCH DWGS FOR MORE INFORMATION.
4. SUPPLEMENTAL FRAMING BEAM INDICATED SHALL BE DESIGNED FOR 350 PLF DEAD LINE LOAD FOR THE LENGTH OF THE BEAM ABOUT THE BEAMS MAJOR AXIS AND A 1,500 LBS POINT LIVE LOAD APPLIED ANYWHERE ALONG THE LENGTH OF THE BEAM WEB ABOUT THE BEAMS MINOR AXIS.
5. FOR EXTENTS OF 4"ø FIRE SUPPRESSION PIPE (17 PLF DEAD LOAD), P.E.M.B. ROOF FRAMING SHALL BE DESIGNED FOR SUPPORT OF PIPE. LINE IS SUPPORTED AT APPROXIMATELY 10'-0" O.C. COORDINATE W/ MEP DWGS.
6. WIND COLUMNS INDICATED SHALL BE DESIGNED FOR 1,500 LBS POINT LIVE LOAD APPLIED ANYWHERE ALONG THE LENGTH OF COLUMN WEB ABOUT THE COLUMNS MINOR AXIS.
7. SUPPLEMENTAL FRAMING SUPPORTS THROWING NET SYSTEM. COORDINATE CONNECTION, LOCATION, AND ELEVATION W/ ARCH DWGS AND SUPPLIER.
8. THE SUPPLEMENTAL FRAMING SHALL HAVE A TOP OF STEEL ELEVATION EQUAL TO THE TOP OF STEEL ELEVATION OF P.E.M.B. FRAME BEAMS. WHERE THROWING FENCE POSTS OCCUR BELOW P.E.M.B. FRAME BEAMS, THEY SHALL BE BRACED OFF TOO THE FRAME BEAMS, SIMILAR TO DETAIL B/S-202.

JRA architects
3225 Summit Square Place, Suite 200
Lexington, Kentucky 40509
859.252.6781

NOT FOR CONSTRUCTION

BROWN+KUBICAN STRUCTURAL ENGINEERS
546 East Main Street, Suite 300
Lexington, KY 40508
859-543-0933
www.brownkubican.com

RFP 2 DRAWINGS

UK INDOOR TRACK FACILITY
UNIVERSITY OF KENTUCKY
700 SPORTS CENTER DRIVE LEXINGTON, KENTUCKY 40506

STRUCTURAL

PROJECT	202258
DATE	08/31/2022

REVISIONS

No.	Description	Date

JRA ARCHITECTS HAS RETAINED AN ELECTRONIC VERSION OF THESE DRAWINGS. THE CLIENT AGREES NOT TO REUSE THESE DRAWINGS - IN ELECTRONIC OR ANY OTHER FORMAT - IN WHOLE, OR IN PART, FOR ANY PURPOSE OTHER THAN FOR THE PROJECT. THE CLIENT AGREES NOT TO TRANSFER THESE ELECTRONIC FILES TO OTHERS WITHOUT THE PRIOR WRITTEN CONSENT OF THE ARCHITECT. THE CLIENT FURTHER AGREES TO WAIVE ALL CLAIMS AGAINST THE ARCHITECT RESULTING IN ANY WAY FROM ANY UNAUTHORIZED CHANGES TO OR REUSE OF THE ELECTRONIC FILES FOR ANY OTHER PROJECT BY ANYONE OTHER THAN THE ARCHITECT.

P.E.M.B. FIRST FLOOR FRAMING PLAN

S-201

COPYRIGHT 2022 - JRA, INC.

C:_REVIT_Local\22157 (UK INDOOR TRACK AND FIELD) STR - RVT21_williams7LNSN.rvt
8/31/2022 3:22:50 PM

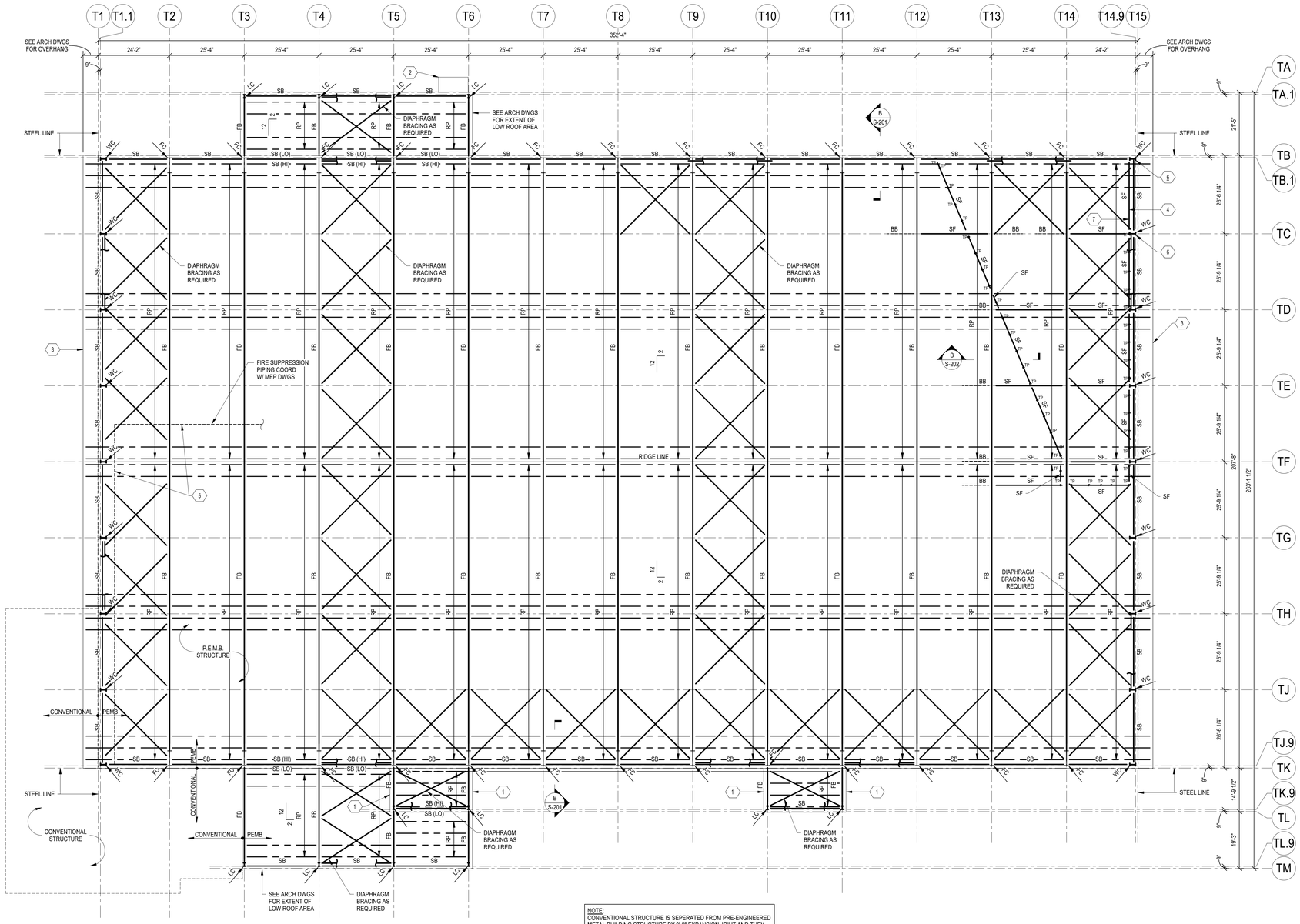

NOTE:
CONVENTIONAL STRUCTURE IS SEPERATED FROM PRE-ENGINEERED METAL BUILDING STRUCTURE BY 0'-2" EXPANSION JOINT AND THEY ARE STRUCTURALLY ISOLATED FROM EACH OTHER.

A S-202 PEMB ROOF FRAMING PLAN
1/16" = 1'-0"

NOTES:
1. CONNECTION BETWEEN P.E.M.B. FRAMING AND THROWING FENCE POST SHALL ALLOW FOR VERTICAL MOVEMENT OF P.E.M.B. STRUCTURE RELATIVE TO POST.
2. CONNECTION IS DIAGRAMATIC ONLY AND SHALL BE DESIGNED AND DETAILED BY P.E.M.B. MANUFACTURER.
3. CONNECTION SHALL BE DESIGNED FOR 800 LBS LIVE POINT LOAD WHICH MAY ACT ENTIRELY PARALLEL OR PERPENDICULAR TO SUPPLEMENTAL FRAMING BEAM.
4. LIVE POINT LOAD NEED ONLY BE APPLIED TO ONE THROWING FENCE POST AT A TIME AND NEED NOT BE APPLIED CONCURRENTLY TO MULTIPLE THROWING FENCE POSTS, IN THE DESIGN OF P.E.M.B. FRAMING.

P.E.M.B. FRAMING PLAN NOTES

1. WALL GIRTS ARE NOT SHOWN ON PLANS AND ROOF PURLINS ARE DIAGRAMMATIC. CONTRACTOR SHALL FRAME OPENINGS AND SPACE AS REQUIRED TO ACCOMMODATE ROOF AND WALL SPANS.
2. TYPICAL WALL GIRTS SHALL BE 8" DEEP, LOCATED TO THE OUTSIDE OF FRAME, WIND, AND LEAN-TO COLUMNS. CONTRACTOR SHALL FRAME AROUND ALL WINDOWS, DOORS, OVERHEAD DOORS, LOUVERS, MECHANICAL PENETRATIONS, ETC. WALL GIRTS AT OPENINGS SHALL HAVE A FLAT 8" DEEP FACE ON (3) SIDES OF THE ROUGH OPENINGS FOR DOORS AND (4) SIDES FOR ALL OTHER OPENINGS, U.N.O. ALL OPENINGS MAY NOT BE SHOWN ON STRUCTURAL DRAWINGS. COORDINATE W/ ARCHITECTURAL AND M.E.P. DRAWINGS FOR ADDITIONAL OPENINGS AND/OR EQUIPMENT LOCATIONS.
3. SEE GENERAL NOTES AND SPECIFICATIONS FOR UNIFORM LOADING.
4. SUPPLEMENTAL FRAMING AT ROOF LEVEL FOR THE BRACING OF THE TOP OF THROWING FENCE POSTS AND THROWING NET POSTS IS DIAGRAMTIC AND SHALL BE DETERMINED BY THE P.E.M.B. MANUFACTURER, AT EACH LOCATION WHERE A THROWING FENCE POST OCCURS, SUPPLEMENTAL FRAMING SHALL BE DESIGNED FOR A CONNECTION AND LOADING AS NOTED IN DETAIL B/S-202.
5. P.E.M.B. FRAME BEAMS AND COLUMNS ON GRIDLINES T12, T13 AND T14, AND P.E.M.B. SPANDREL BEAMS AND WIND COLUMNS ON GRIDLINE T14.9 TO THE PLAN-SOUTH OF GRIDLINE TF SHALL BE DESIGNED FOR MIRRORED LOADING CAUSED BY THROWING FENCE POSTS TO THE PLAN-NORTH OF GRIDLINE TF FOR FUTURE ADDITION OF THROWING FENCE POSTS TO THE PLAN-SOUTH OF GRIDLINE TF.

P.E.M.B. FRAMING LEGEND

= X-BRACING (ROD BRACING) LOCATIONS.

FC = P.E.M.B. FRAME COLUMN.

WC = P.E.M.B. WIND COLUMN.

LC = P.E.M.B. LEAN-TO FRAME COLUMN.

RP = P.E.M.B. ROOF PURLIN.

FB = P.E.M.B. FRAME BEAM. (P.E.M.B. TRUSS MAY OCCUR FOR MEMBERS SPANNING FROM GRID TB.1 TO TJ.9)

SB = P.E.M.B. SPANDREL BEAM.

SF = P.E.M.B. SUPPLEMENTAL FRAMING.

BB = P.E.M.B. BEAM FLANGE BRACING.

TP = THROWING FENCE POST. COORDINATE W/ ARCH DWGS.

12/2 = ROOF SLOPE.

N.I.C. = NOT IN CONTRACT

P.E.M.B. TAG NOTES

1. LARGE ARU LOUVER LOCATED IN WALL. BRACING NOT ALLOWED IN BAY. COORDINATE W/ ARCH & MEP DWGS.
2. PRE-MANUFACTURED CANOPY. COORDINATE CANOPY SUPPORT AND LOADS W/ MANUFACTURER AND ARCH DWGS.
3. OVERHANG CONSTRUCTION BY P.E.M.B. MANUFACTURER. SEE ARCH DWGS FOR MORE INFORMATION.
4. SUPPLEMENTAL FRAMING BEAM INDICATED SHALL BE DESIGNED FOR 350 PLF DEAD LINE LOAD FOR THE LENGTH OF THE BEAM ABOUT THE BEAMS MAJOR AXIS AND A 1,500 LBS POINT LIVE LOAD APPLIED ANYWHERE ALONG THE LENGTH OF THE BEAM WEB ABOUT THE BEAMS MINOR AXIS.
5. FOR EXTENTS OF 4"ø FIRE SUPPRESSION PIPE (17 PLF DEAD LOAD), P.E.M.B. ROOF FRAMING SHALL BE DESIGNED FOR SUPPORT OF PIPE. LINE IS SUPPORTED AT APPROXIMATELY 10'-0" O.C. COORDINATE W/ MEP DWGS.
6. WIND COLUMNS INDICATED SHALL BE DESIGNED FOR 1,500 LBS POINT LIVE LOAD APPLIED ANYWHERE ALONG THE LENGTH OF COLUMN WEB ABOUT THE COLUMNS MINOR AXIS.
7. SUPPLEMENTAL FRAMING SUPPORTS THROWING NET SYSTEM. COORDINATE CONNECTION, LOCATION, AND ELEVATION W/ ARCH DWGS AND SUPPLIER.
8. THE SUPPLEMENTAL FRAMING SHALL HAVE A TOP OF STEEL ELEVATION EQUAL TO THE TOP OF STEEL ELEVATION OF P.E.M.B. FRAME BEAMS. WHERE THROWING FENCE POSTS OCCUR BELOW P.E.M.B. FRAME BEAMS, THEY SHALL BE BRACED OFF TOO THE FRAME BEAMS, SIMILAR TO DETAIL B/S-202.

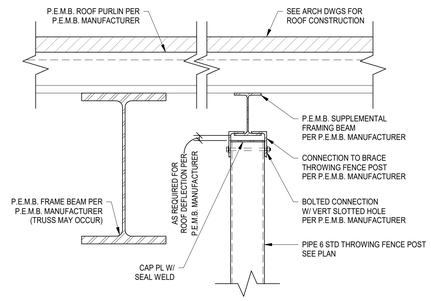

B S-202 DIAGRAMATIC THROWING FENCE POST TOP SUPPORT DETAIL
NOT TO SCALE

JRA architects
3225 Summit Square Place, Suite 200
Lexington, Kentucky 40509
859.252.6781

NOT FOR CONSTRUCTION

BROWN+KUBICAN STRUCTURAL ENGINEERS
546 East Main Street, Suite 300
Lexington, KY 40508
859-543-0933
www.brownkubican.com

RFP 2 DRAWINGS

UK INDOOR TRACK FACILITY
UNIVERSITY OF KENTUCKY
700 SPORTS CENTER DRIVE LEXINGTON, KENTUCKY 40506

STRUCTURAL

PROJECT	202258
DATE	08/31/2022

REVISIONS

No.	Description	Date

JRA ARCHITECTS HAS RETAINED AN ELECTRONIC VERSION OF THESE DRAWINGS. THE CLIENT AGREES NOT TO REUSE THESE DRAWINGS - IN ELECTRONIC OR ANY OTHER FORMAT - ON WHOLE, OR IN PART, FOR ANY PURPOSE OTHER THAN THE PROJECT. THE CLIENT AGREES NOT TO TRANSFER THESE ELECTRONIC FILES TO OTHERS WITHOUT THE PRIOR WRITTEN CONSENT OF THE ARCHITECT. THE CLIENT FURTHER AGREES TO WAIVE ALL CLAIMS AGAINST THE ARCHITECT RESULTING IN ANY WAY FROM ANY UNAUTHORIZED CHANGES TO OR REUSE OF THE ELECTRONIC FILES FOR ANY OTHER PROJECT BY ANYONE OTHER THAN THE ARCHITECT.

P.E.M.B. ROOF FRAMING PLAN

S-202

COPYRIGHT 2022 - JRA, INC.

C:_REVIT_Local\22157 (UK INDOOR TRACK AND FIELD) STR - RVT21_williams7LNSN.rvt
8/31/2022 3:22:50 PM

C:\Users\lburnett\OneDrive - JRA Architects\Documents\202258 - UK Indoor Track_lburnettNA4L5.rvt

UK INDOOR TRACK FACILITY

700 SPORTS CENTER DRIVE LEXINGTON, KENTUCKY 40506

CONCEPT RENDERING

PACKAGE

RFP 2 DRAWINGS

08/31/2022

OWNER
UNIVERSITY OF KENTUCKY
Lexington, Kentucky 40506
Capital Project Management Division
P: 859.257.5911
F: 859.323.1017

ARCHITECT
JRA ARCHITECTS
3225 Summit Square Place, Suite 200
Lexington, KY 40509
P: 859.252.6781
F: 859.255.5483

STRUCTURAL ENGINEER
BROWN + KUBICAN
546 E Main St.
Lexington, KY 40508
P: 859.543.0933

MECHANICAL / ELECTRICAL ENGINEER
CMTA CONSULTING ENGINEERS
220 Lexington Green Circle, Suite 600
Lexington, KY 40503
P: 859.253.0892

CIVIL ENGINEER
CARMAN
310 Old Vine Street, Suite 200
Lexington, KY 40507
P: 859.254.9803

TRACK & FIELD DESIGN
PAIGE DESIGN GROUP
1040 Frank Davis Road
Waynesville, NC 28785
P: 919.451.1641

DRAWING INDEX

GENERAL
G-001 COVER SHEET
G-101 INFORMATION DRAWING
G-102 LOCATIONS AND LAYOUT RULES
G-103 LIFE SAFETY PLAN

CIVIL
C-101 SITE LAYOUT PLAN
C-201 GRADING AND DRAINAGE PLAN
C-202 DRAINAGE DETAILS
C-301 SITE DETAILS
C-302 EROSION CONTROL DETAILS
C-401 LANDSCAPE PLAN

STRUCTURAL
S-102 GENERAL NOTES
S-103 SPECIAL INSPECTIONS
S-104 ISOMETRIC VIEWS
S-203 OVERALL FOUNDATION PLAN
S-204 FOUNDATION PLAN AREA A
S-205 FOUNDATION PLAN AREA B
S-206 ROOF FRAMING PLAN
S-301 TYPICAL FOUNDATION DETAILS
S-302 TYPICAL FOUNDATION DETAILS
S-303 FOUNDATION SECTIONS
S-401 TYPICAL FRAMING DETAILS
S-402 FRAMING SECTIONS
S-501 STEEL COLUMN SCHEDULE
S-601 TYPICAL COLD-FORMED STEEL DETAILS
S-602 TYPICAL COLD-FORMED STEEL DETAILS

ARCHITECTURAL
A-101 OVERALL FLOOR PLAN
A-101A HIGH WINDOWS FLOOR PLAN
A-102 FIRST FLOOR PLAN CALLOUTS - AREA A
A-103 FIRST FLOOR PLAN CALLOUTS - AREA B
A-121 FIRST FLOOR DIMENSION PLAN - AREA A
A-122 FIRST FLOOR DIMENSION PLAN - AREA B
A-131 FIRST FLOOR REFLECTED CEILING PLAN - AREA A
A-132 ENLARGED REFLECTED CEILING PLAN
A-141 FIRST FLOOR FINISH PLAN - AREA A
A-142 FIRST FLOOR FINISH PLAN - AREA B
A-181 ROOF PLAN
A-182 ROOF MISC PLANS & DETAILS
A-201 BUILDING ELEVATIONS
A-202 ENLARGED BUILDING ELEVATIONS
A-203 ENLARGED BUILDING ELEVATIONS
A-204 ENLARGED BUILDING ELEVATIONS
A-301 BUILDING SECTIONS
A-351 WALL SECTIONS (PEMB)
A-352 WALL SECTIONS (PEMB)
A-353 WALL SECTIONS (PEMB)
A-354 WALL SECTIONS (PEMB)
A-355 WALL SECTIONS (PEMB ALT)
A-356 WALL SECTIONS (PEMB EJ)
A-357 WALL SECTIONS (PEMB EJ)
A-358 WALL SECTIONS
A-359 WALL SECTIONS
A-401 ENLARGED FLOOR PLANS
A-411 INTERIOR ELEVATIONS
A-501 EXTERIOR ASSEMBLIES
A-511 PLAN DETAILS
A-521 FOUNDATION DETAILS
A-522 FOUNDATION DETAILS
A-532 ENLARGED SECTION DETAILS
A-533 ENLARGED SECTION DETAILS
A-541 ENLARGED PARAPET / ROOF DETAILS
A-542 ENLARGED PARAPET / ROOF DETAILS
A-561 CASEWORK DETAILS
A-601 DOOR SCHEDULE AND DETAILS
A-602 EXTERIOR FRAME TYPE ELEVATIONS
A-603 EXTERIOR & INTERIOR FRAME TYPE ELEVATIONS
A-611 HEAD DETAILS
A-612 HEAD DETAILS
A-613 JAMB DETAILS
A-614 JAMB & SILL DETAILS
A-621 ROOM FINISH SCHEDULE
A-631 SIGNAGE SCHEDULE
A-701 PARTITION TYPE SCHEDULE AND DETAILS
A-702 TYPICAL PARTITION DETAILS
A-703 TYPICAL PARTITION DETAILS

TRACK AND FIELD
TF-101 LAYOUT PLAN
TF-102 DIMENSION PLAN
TF-103 DRAFT UTILITIES
TF-104 T&F DETAILS
TF-105 T&F DETAILS

SITE UTILITIES
EU-101 ELECTRICAL SITE UTILITY PLAN
MU-101 MECHANICAL SITE UTILITY PLAN

FIRE PROTECTION
FP-101 FIRE SUPPRESSION LEGEND
FP-201 OVERALL FIRE PROTECTION PLAN

PLUMBING
P-101 PLUMBING LEGEND
P-201 OVERALL PLUMBING PLAN
P-202 ENLARGED PLUMBING PLANS
P-401 PLUMBING SCHEDULES AND DETAILS

MECHANICAL
M-101 MECHANICAL LEGEND
M-201 MECHANICAL PLAN
M-202 ENLARGED ENTRANCE MECHANICAL PLAN
M-301 MECHANICAL PIPING PLAN
M-302 ENLARGED MECHANICAL ROOMS
M-401 MECHANICAL CONTROLS
M-501 MECHANICAL SCHEDULES AND DETAILS

ELECTRICAL
E-101 ELECTRICAL LEGEND
E-201 FIRST FLOOR LIGHTING PLAN - AREA A
E-202 FIRST FLOOR LIGHTING PLAN - AREA B
E-203 FIRST FLOOR LIGHTING PLAN - AREA C
E-204 FIRST FLOOR LIGHTING PLAN - AREA D
E-205 LOWER ROOF LIGHTING PLAN
E-301 FIRST FLOOR POWER PLAN - AREA A
E-302 FIRST FLOOR POWER PLAN - AREA B
E-303 FIRST FLOOR POWER PLAN - AREA C
E-304 FIRST FLOOR POWER PLAN - AREA D
E-401 FIRST FLOOR SYSTEMS PLAN - AREA A
E-402 FIRST FLOOR SYSTEMS PLAN - AREA B
E-403 FIRST FLOOR SYSTEMS PLAN - AREA C
E-404 FIRST FLOOR SYSTEMS PLAN - AREA D
E-501 ONE-LINE DIAGRAM
E-601 LIGHT FIXTURE SCHEDULE
E-701 ELECTRICAL DETAILS
E-702 ELECTRICAL DETAILS
E-703 ELECTRICAL DETAILS
E-704 ELECTRICAL DETAILS

JRA architects
3225 Summit Square Place, Suite 200
Lexington, Kentucky 40509
859.252.6781

NOT FOR CONSTRUCTION

RESERVED FOR AHJ STAMP

RFP 2 DRAWINGS

UK INDOOR TRACK FACILITY
UNIVERSITY OF KENTUCKY
700 SPORTS CENTER DRIVE LEXINGTON, KENTUCKY 40506

GENERAL

PROJECT	202258
DATE	08/31/2022

REVISIONS

No.	Description	Date

JRA ARCHITECTS HAS RETAINED AN ELECTRONIC VERSION OF THESE DRAWINGS. THE CLIENT AGREES NOT TO REUSE THESE DRAWINGS - IN ELECTRONIC OR ANY OTHER FORMAT - IN WHOLE, OR IN PART, FOR ANY PURPOSE OTHER THAN FOR THE PROJECT. THE CLIENT AGREES NOT TO TRANSFER THESE ELECTRONIC FILES TO OTHERS WITHOUT THE PRIOR WRITTEN CONSENT OF THE ARCHITECT. THE CLIENT FURTHER AGREES TO WAIVE ALL CLAIMS ARISING FROM ANY MODIFICATION THEREOF BY WAY FROM ANY UNAUTHORIZED CHANGES TO OR REUSE OF THE ELECTRONIC FILES FOR ANY OTHER PROJECT BY ANYONE OTHER THAN THE ARCHITECT.

COVER SHEET

G-001

COPYRIGHT 2022 - JRA, INC.

9/2/2022 3:24:55 PM

C:\Users\lburnett\OneDrive - JRA Architects\Documents\202258 - UK Indoor Track_lburnettAN4L5.rvt

ABBREVIATIONS

#	POUND OR NUMBER
&	AND
---	CENTERLINE
@	AT
A/C	AIR CONDITIONING
AB	ANCHOR BOLT
AC	ACRE
ACOUS	ACOUSTICAL
AD	AREA DRAIN
ADD	ADDENDUM
ADJ	ADJUSTABLE
ADJAC	ADJACENT
AESS	ARCHITECTURALLY EXPOSED STRUCTURAL STEEL
AFF	ABOVE FINISHED FLOOR
AGGR	AGGREGATE
ALT	ALTERNATIVE
ALUM	ALUMINUM
ANOD	ANODIZED
AP	ACCESS PANEL
APPROX	APPROXIMATE
ARCH	ARCHITECTURAL
ASB	ASBESTOS
ASPH	ASPHALT
ATTEN	ATTENUATION
BC	BACK OF CURB
BD	BOARD
BITUM	BITUMINOUS
BLDG	BUILDING
BLK	BLOCK
BLKG	BLOCKING
BLKT	BLANKET
BM	BEAM
BOT	BOTTOM
BPL	BEARING PLATE
BRG	BEARING
BRK	BRICK
BSMT	BASEMENT
BUR	BUILT UP ROOFING
CAB	CABINET
CB	CATCH BASIN
CEM	CEMENT
CER	CERAMIC
CFM	CUBIC FEET PER MINUTE
CG	CORNER GUARD
CHB	CHALK BOARD
CJ	CONTROL JOINT
CLG	CEILING
CLKG	CAULKING
CLO	CLOSET
CLR	CLEAR
CMU	CONCRETE MASONRY UNIT
CMW	CASEWORK / MILLWORK
CNTR	COUNTER
CO	CLEAN OUT
COL	COLUMN
CONC	CONCRETE
CONSTR	CONSTRUCTION
CONT	CONTINUOUS
CONV	CONVENTIONAL
CORR	CORRIDOR
CPT	CARPET
CR	CARD READER
CSMT	CASEMENT
CT	CERAMIC TILE
CTR	CENTER
CTSK	COUNTERSUNK
DBL	DOUBLE
DEPT	DEPARTMENT
DET	DETAIL
DF	DRINKING FOUNTAIN
DH	DOUBLE HUNG
DIA	DIAMETER
DIAG	DIAGONAL
DIM	DIMENSION
DISP	DISPENSER
DL	DEAD LOAD
DN	DOWN
DR	DOOR
DS	DOWNSPOUT
DSP	DRY STANDPIPE
DWG	DRAWING
DWR	DRAWER
E	EAST
EA	EACH
EB	EXPANSION BOLT
EHD	ELECTRIC HAND DRYER
EJ	EXPANSION JOINT
EL	ELEVATION
ELEC	ELECTRICAL
ELEV	ELEVATOR
EMER	EMERGENCY
ENCL	ENCLOSURE
ENL	ENLARGED
ENTR	ENTRANCE
EP	ELECTRICAL PANEL
EQ	EQUAL
EQPT	EQUIPMENT
EST	ESTIMATE
EWC	ELECTRIC WATER COOLER
EXIST	EXISTING
EXP	EXPANSION
EXT	EXTERIOR
FA	FIRE ALARM
FB	FLAT BAR
FCO	FLOOR CLEAN OUT
FD	FLOOR DRAIN
FDN	FOUNDATION
FE	FIRE EXTINGUISHER
FEC	FIRE EXTINGUISHER CABINET
FF	FINISHED FLOOR
FFE	FINISHED FLOOR ELEVATION
FFL	FINISHED FLOOR LINE
FHC	FIRE HOSE CABINET
FIN	FINISH
FL	FLOOR
FLASH	FLASHING
FLUOR	FLUORESCENT
FOC	FACE OF CONCRETE
FOF	FACE OF FINISH
FOM	FACE OF MASONRY
FOS	FACE OF STUD
FPRF	FIREPROOF
FS	FULL SIZE
FT	FOOT OR FEET
FTG	FOOTING
FV	FIELD VERIFY
GA	GAUGE
GALV	GALVANIZED
GB	GRAB BAR
GFI	GROUND FAULT INTERRUPTER
GI	GALVANIZED IRON
GL	GLASS
GND	GROUND
GR	GRADE
GRTG	GRATING
GWB	GYPSUM WALL BOARD
GYP	GYPSUM
HB	HOSE BIBB
HBD	HARDBOARD
HC	HOLLOW CORE
HDWD	HARDWOOD
HDWR	HARDWARE
HGT	HEIGHT
HM	HOLLOW METAL
HNDRL	HANDRAIL
HORIZ	HORIZONTAL
HP	HIGH POINT
HTG	HEATING
HTR	HEATER
HVAC	HEATING/VENTILATION/AIR CONDITIONING
HW	HOT WATER
ID	INSIDE DIAMETER (DIM)
IF	INSIDE FACE
IN	INCH
INCIN	INCINERATOR
INCL	INCLUDE
INSUL	INSULATION
INT	INTERIOR
INV	INVERT
JAN	JANITOR
JST	JOIST
JT	JOINT
KIT	KITCHEN
KO	KNOCK OUT
KP	KEY PAD
L	LENGTH
LAB	LABORATORY
LAM	LAMINATE
LAV	LAVATORY
LBL	LABEL
LG	LONG
LH	LEFT HAND
LKR	LOCKER
LL	LIVE LOAD
LOC	LOCATION
LP	LOW POINT
LT	LIGHT
LTL	LINTEL
LWT	LIGHT WEIGHT
MACH	MACHINE
MAINT	MAINTENANCE
MAS	MASONRY
MATL	MATERIAL
MAX	MAXIMUM
MB	MARKER BOARD
MECH	MECHANICAL
MEMB	MEMBRANE
MET	METAL
MFR	MANUFACTURER
MH	MANHOLE
MIN	MINIMUM
MIR	MIRROR
MISC	MISCELLANEOUS
MO	MASONRY OPENING
MOD	MODULAR
MOV	MOVING
MT	MOUNT
MTD	MOUNTED
MUL	MULLION
N	NORTH
N/A	NOT APPLICABLE
NIC	NOT IN CONTRACT
NO	NUMBER
NOM	NOMINAL
NTS	NOT TO SCALE
OA	OVERALL
OBS	OBSCURE
OC	ON CENTER
OD	OUTSIDE DIAMETER (DIM)
OF	OWNER FURNISHED
OFCI	OWNER FURNISHED / CONTRACTOR INSTALLED
OFOI	OWNER FURNISHED / OWNER INSTALLED
OH	OPPOSITE HAND
OPNG	OPENING
OPP	OPPOSITE
OZ	OUNCE
PA	PUBLIC ADDRESS
PAR	PARALLEL
PC	PRECAST
PCF	POUNDS PER CUBIC FOOT
PED	PEDESTAL
PERF	PERFORATED
PFM	PREFINISHED METAL
PL	PLATE
PLAM	PLASTIC LAMINATE
PLAS	PLASTER
PLMG	PLUMBING
PNL	PANEL
PNTD	PAINTED
POL	POLISHED
PR	PAIR
PREFAB	PREFABRICATED
PREFIN	PREFINISHED
PROP	PROPERTY
PRPL	PROPERTY LINE
PSF	POUNDS PER SQUARE FOOT
PSI	POUNDS PER SQUARE INCH
PT	POINT
PTD	PAPER TOWEL DISPENSER
PTN	PARTITION
PVC	POLYVINYL CHLORIDE
PVMT	PAVEMENT
PWD	PLYWOOD
QT	QUARRY TILE
QTR	QUARTER
R	RISER
RA	RETURN AIR
RAD	RADIUS
RB	RUBBER BASE
RCP	REINFORCED CONCRETE PIPE
RD	ROOF DRAIN
REF	REFERENCE
REFRIG	REFRIGERATOR
REINF	REINFORCED
REQD	REQUIRED
RESIL	RESILIENT
REV	REVISION
RGSTR	REGISTER
RH	RIGHT HAND
RL	RAIN LEADER
RM	ROOM
RO	ROUGH OPENING
ROW	RIGHT OF WAY
S	SOUTH
SAB	SOUND ATTENUATION BLANKET
SAC	SUSPENDED ACOUSTICAL CEILING
SAT	SUSPENDED ACOUSTICAL TILE
SC	SOLID CORE
SCH	SCHEDULE
SD	STORM DRAIN
SECT	SECTION
SF	SQUARE FOOT
SHLF	SHELF
SHT	SHEET
SHWR	SHOWER
SIM	SIMILAR
SND	SANITARY NAPKIN DISPOSAL
SOG	SLAB ON GRADE
SP	SOUND PROOF
SPEC	SPECIFICATION
SPKR	SPEAKER
SS	SANITARY SEWER
SST	STAINLESS STEEL
STA	STATION
STC	SOUND TRANSMISSION COEFFICIENT
STD	STANDARD
STL	STEEL
STOR	STORAGE
STR	STAIR
STRUCT	STRUCTURAL
SUSP	SUSPENDED
SY	SQUARE YARD
SYM	SYMMETRICAL
SYS	SYSTEM
T	TREAD
T&G	TONGUE AND GROOVE
TB	TACK BOARD
TC	TOP OF CURB
TEL	TELEPHONE
TEMP	TEMPORARY
TER	TERRAZZO
THK	THICK
THR	THRESHOLD
TOP	TOP OF PAVEMENT
TOS	TOP OF STEEL
TOW	TOP OF WALL
TP	TOILET PARTITION
TPH	TOILET PAPER HOLDER
TSCD	TOILET SEAT COVER DISPENSER
TSTAT	THERMOSTAT
TYP	TYPICAL
UL	UNDERWRITERS LABORATORIES
UNO	UNLESS NOTED OTHERWISE
UR	URINAL
VB	VAPOR BARRIER
VCT	VINYL COMPOSITION TILE
VERT	VERTICAL
VEST	VESTIBULE
VNB	VINYL BASE
VT	VINYL TILE
VTR	VENT THROUGH ROOF
VWC	VINYL WALL COVERING
W	WEST
W/	WITH
W/O	WITHOUT
WC	WATER CLOSET
WD	WOOD
WH	WATER HEATER
WP	WATERPROOF
WR	WATER RESISTANT
WSCT	WAINSCOT
WT	WEIGHT
WWF	WOVEN WIRE FABRIC

SYMBOLS LEGEND

ACOUSTICAL CEILING PANEL

ALUMINUM

BATT INSULATION

BRICK

CERAMIC OR QUARRY TILE

CMU

CONCRETE (SECTION)

CONCRETE OR PRECAST CONCRETE (PLAN / ELEVATION)

CRUSHED STONE

EARTH

E.I.F.S. (ELEVATION)

E.I.F.S. (SECTION)

GYPSUM BOARD (TYPE AS NOTED)

LIMESTONE

PLYWOOD

PRECAST CONCRETE (SECTION)

RIGID INSULATION

SOLID SURFACE

STEEL

SOLID WOOD (TREATMENT AS NOTED)

WOOD (FINISH)

ROOM NAME & ROOM NUMBER (ROOM NAME 101 — NAME, NUMBER)

ROOM NUMBER (RCP PLANS) (101 — NUMBER)

DOOR OPENING INDICATOR (101 — NUMBER)

EXTERIOR WINDOW OPENING INDICATOR (A)

INTERIOR WINDOW OPENING INDICATOR (01)

PARTITION TYPE INDICATOR (1t — NUMBER OR LETTER)

EQUIPMENT INDICATOR (E001 — NUMBER OR LETTER)

CEILING INDICATOR (ACT-1 / 18' - 0" — HEIGHT, TYPE)

DEMOLITION PLAN NOTE (1)

PLAN NOTE (1)

ACCENT WALL INDICATOR (P-1)

NORTH ARROW (BUILDING NORTH, TRUE NORTH)

COLUMN GRID (NEW) (0)

COLUMN GRID (EXIST) (0)

BENCHMARK, LEVEL, OR SPOT ELEVATION

KEYNOTE (SPEC REFERENCE) (04 2000.A1)

NEW DOOR AND FRAME

ITEM TO BE REMOVED

ITEM TO REMAIN

MATERIAL INDICATOR (L-1)

CONTROL JOINT (C.J.)

BUILDING SECTION (SECTION, A, A-101, SHEET NUMBER)

WALL SECTION (SECTION, A, A-101, SHEET NUMBER)

DETAIL SECTION (SECTION, A, A-101, SHEET NUMBER)

DETAIL CALLOUT OR ENLARGED PLAN (DRAWING NUMBER, A, A-101, SHEET NUMBER)

EXISTING DOOR AND FRAME TO REMAIN

REMOVE DOOR AND FRAME

CENTER LINE

VICINITY MAP

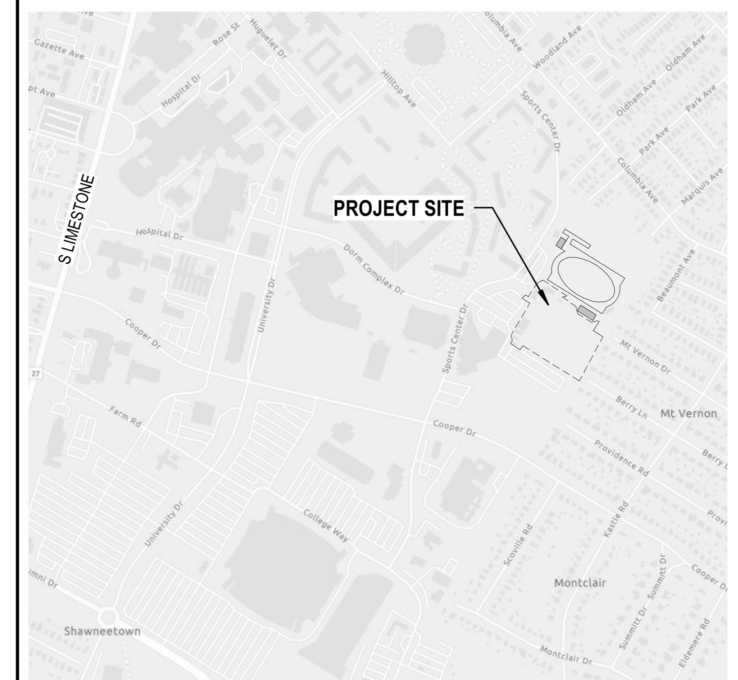

APPLICABLE CODES/STANDARDS

2018 KENTUCKY BUILDING CODE - (BASED ON THE 2015 INTERNATIONAL BUILDING CODE)

2009 ICC/ANSI A117.1 ACCESSIBLE AND USABLE BUILDINGS AND FACILITIES

2015 INTERNATIONAL MECHANICAL CODE

2012 INTERNATIONAL ENERGY CONSERVATION CODE (COMMERCIAL BUILDINGS)

2020 KENTUCKY PLUMBING LAW, REGULATIONS, & CODE (815 KAR Chapter 20)

2015 INTERNATIONAL FIRE CODE (IFC) - (NEW CONSTRUCTION PROJECTS, AND ONLY WHEN SPECIFICALLY REFERENCED BY THE BODY OF KBC)

1996 KENTUCKY STATE BOILER REGULATION (KRS 236, 815 KAR Chapter 15)

2012 NFPA 1 - UNIFORM FIRE CODE (AS DIRECTED BY 2013 KENTUCKY STANDARDS OF SAFETY)

2013 NFPA 13 - STANDARD FOR THE INSTALLATION OF SPRINKLER SYSTEMS

2013 NFPA 14 - INSTALLATION OF STANDPIPE AND HOSE SYSTEMS

2012 NFPA 54 - NATIONAL FUEL GAS CODE

2017 NFPA 70 - NATIONAL ELECTRICAL CODE

2013 NFPA 72 - NATIONAL FIRE ALARM AND SIGNALING CODE

GB-03-01 SEAOK - SPECIAL INSPECTION GUIDELINES, THIRD EDITION, MARCH 2007

THE ABOVE IS FOR REFERENCE ONLY AND IS ONLY REPRESENTATIVE OF THE MANY CODES AND STANDARDS CURRENTLY USED IN KENTUCKY. FOR SPECIFICS, REFER TO CHAPTER 35 OF THE KBC AND IBC.

GENERAL NOTES

GENERAL NOTES - ARCHITECTURAL

A FIELD VERIFY EXISTING FINISH FLOOR ELEVATIONS PRIOR TO STARTING CONSTRUCTION. MATCH NEW FLOOR ELEVATION WITH EXISTING UNLESS NOTED OTHERWISE.
B DIMENSIONS TO EXISTING CONSTRUCTION ARE TO FINISHED SURFACE. DIMENSIONS TO NEW CONSTRUCTION ARE TO STRUCTURAL CENTERLINE, FACE OF CONCRETE OR MASONRY CONSTRUCTION, OR TO FINISH FACE OF FRAMED MEMBERS UNLESS NOTED OTHERWISE. FIELD VERIFY ALL CONDITIONS AND DIMENSIONS PRIOR TO STARTING WORK AND NOTIFY ARCHITECT IMMEDIATELY IF DISCREPANCIES ARE FOUND BETWEEN CONTRACT DOCUMENTS AND ACTUAL FIELD CONDITIONS.
C WHERE A FIXED DIMENSION IS SHOWN ON AN ACCESSIBLE FIXTURE OR ACCESSORY, THAT ITEM SHALL BE INSTALLED EXACTLY AS DIMENSIONED. REFER TO THE ACCESSORY MOUNTING LEGEND FOR MOUNTING HEIGHTS.
D DO NOT SCALE DRAWINGS. REFER DIMENSION QUESTIONS TO ARCHITECT FOR INTERPRETATION.
E DOOR AND FRAME NUMBERS CORRESPOND TO RESPECTIVE ROOM NUMBERS. IN ROOMS WITH MULTIPLE OPENINGS, A SUFFIX HAS BEEN ADDED TO DOOR NUMBERS, I.E., A101-B.
F COORDINATE EQUIPMENT WORK WITH MANUFACTURERS AND SUPPLIERS TO INSURE PROPER ROUGH-IN CLEARANCES FOR INSTALLATION, USE AND MAINTENANCE.
G PROTECT EXISTING SURFACES TO REMAIN THAT ARE NOT INCLUDED IN SCOPE OF WORK BUT THAT ARE WITHIN AREAS OF CONSTRUCTION ACTIVITY.
H VERTICAL COURSING FOR NEW MASONRY WALL CONSTRUCTION SHALL EQUAL EIGHT INCHES (8") FOR ONE CONCRETE MASONRY UNIT PLUS ONE MORTAR JOINT AND THREE BRICK COURSES PLUS THREE MORTAR JOINTS, UNLESS NOTED OTHERWISE.
J VERIFY MOUNTING HEIGHTS OF ACCESSORIES, EQUIPMENT, DOOR HARDWARE, CASEWORK, ETC., AND PROVIDE SOLID 2X SUPPORT WOOD BLOCKING FASTENED TO FRAMING MEMBERS AS REQUIRED TO SUPPORT WEIGHT AND USE OF ITEMS. WHERE MOUNTING HEIGHTS ARE NOT INDICATED, MOUNT ITEMS IN ACCORDANCE WITH RECOGNIZED INDUSTRY STANDARDS, COORDINATE LOCATIONS WITH MANUFACTURER OR SUPPLIER AND REFER MOUNTING HEIGHT QUESTIONS TO ARCHITECT FOR INTERPRETATION.
K AT ALL EXTERIOR ENVELOPE CONDITIONS, SOLID WOOD BLOCKING INDICATED SHALL BE CONTINUOUS, U.N.O.
L PROVIDE SEALANT BETWEEN HOLLOW METAL FRAME PERIMETERS AND SURROUNDING WALL CONSTRUCTION UNLESS OTHERWISE INDICATED.
M PROVIDE SEALANT BETWEEN INTERIOR AND EXTERIOR WINDOW AND STOREFRONT FRAME PERIMETERS AND SURROUNDING CONSTRUCTION UNLESS OTHERWISE INDICATED.
N PROVIDE SEALANT BETWEEN DISSIMILAR MATERIALS SUCH AS GYPSUM BOARD AND MASONRY, MASONRY AND CONCRETE, COUNTERTOPS AND WALLS, ETC.
P REPAIR AND PATCH SPRAYED FIRE-RESISTIVE AND FIRESTOP MATERIALS WHERE DAMAGED DUE TO INSTALLATION OF NEW MATERIALS TO RESTORE SPECIFIED FIRE RATING.
Q DO NOT BEGIN WORK THAT MAY REQUIRE COORDINATION, SUCH AS CEILING INSTALLATION, PRIOR TO FINAL SUBMITTAL OF MECHANICAL AND ELECTRICAL COORDINATION DRAWINGS TO ARCHITECT NOR PRIOR TO RESOLUTION AND APPROVAL OF COORDINATION ISSUES.
R REFER TO LIFE SAFETY DRAWINGS FOR FIRE-RATED FLOOR, WALL, CEILING AND ROOF LOCATIONS. INSTALL FIRESTOPPING AT PENETRATIONS IN RATED CONSTRUCTION AND AT TOPS OF RATED WALLS.
S REFER TO STRUCTURAL DRAWINGS FOR FOOTING, UNDERSLAB DRAINAGE AND BACKFILL REQUIREMENTS.
T WORK SHOWN ON THE DRAWINGS SHALL BE BASE BID UNLESS SPECIFICALLY NOTED TO BE BY ALTERNATE BID.
U REFER TO LANDSCAPE AND CIVIL DRAWINGS FOR SITE ELEMENTS AND IMPROVEMENTS ADJACENT TO BUILDING EXTERIOR.
V REFER TO CIVIL DRAWINGS FOR FOUNDATION DRAINS AND STORM DRAINAGE REQUIREMENTS.
W REFER TO CIVIL DRAWINGS FOR FINISH FLOOR ELEVATIONS RELATIVE TO SITE GRADING.

GENERAL NOTES - CASEWORK

A IN ADDITIONAL TO ALL KEYNOTES SHOWN, CASEWORK MFR(S). SHALL PROVIDE FINISHED ENDS AT ALL EXPOSED SURFACES.
B PROVIDE IN-WALL BLOCKING FOR ALL WALL/TALL CABINETS. ALL WOOD BLOCKING TO BE FIRE TREATED.
C PROVIDE 4" HIGH SIDE SPLASHES AT ALL COUNTERTOPS ADJACENT TO WALLS OR OTHER VERTICAL SURFACE.
D PROVIDE ALL FILLERS, APRONS, CLOSURES, TRIM, ETC. AS REQ'D. FOR A COMPLETE INSTALLATION.
E PROVIDE 1" RADIUS ON ALL OUTSIDE, EXPOSED CORNERS OF COUNTERTOPS.
F U.N.O., ALL BASE CABINETS ARE 24" DEEP. U.N.O., ALL WALL CABINETS ARE 12" DEEP.
G VERIFY ALL OWNER-FURNISHED EQUIPMENT SIZES WITH OWNER PRIOR TO FABRICATION OF CASEWORK.
H PROVIDE FINISHED END PANELS, FILLERS, SUPPORTS, ETC. REQUIRED FOR A COMPLETE CABINETRY INSTALLATION. PROVIDE CUTOUTS, ACCESS PANELS AND REMOVABLE COMPONENTS AS REQUIRED BY NEW OR EXISTING CONDITIONS SUCH AS ELEC. OUTLETS, JUNCTION BOXES, CLEANOUTS, ETC.

GENERAL NOTES - CEILINGS

A CENTER CEILING GRIDS WITHIN ROOMS EACH DIRECTION UNLESS NOTED OTHERWISE.
B LOCATE CEILING GRIDS WITHIN ROOMS SUCH THAT BORDERS CONTAIN NOT LESS THAN 1/2 TILE WIDTH, UNLESS OTHERWISE INDICATED.
C CENTER PENETRATIONS IN ACOUSTICAL CEILING SYSTEMS WITHIN INDIVIDUAL CEILING PANELS, SUCH AS SPRINKLER HEADS, DIFFUSERS, LIGHT FIXTURES, ETC., UNLESS OTHERWISE INDICATED.
D PAINT EXPOSED GYPSUM BOARD AND PLASTER CEILING SURFACES UNLESS OTHERWISE INDICATED.
E PROVIDE CONTROL JOINTS (C.J.) IN GYPSUM BOARD CEILING CONSTRUCTION AS INDICATED. WHERE NOT SHOWN, PROVIDE MAXIMUM SPACING BETWEEN JOINTS OF 30'-0." VERIFY FINAL CONTROL JOINT LOCATIONS WITH ARCHITECT PRIOR TO STARTING WORK WHETHER OR NOT INDICATED ON THE DRAWINGS.
F CEILING ACCESS DOORS INDICATED ARE NOT INTENDED TO LIMIT NUMBER OF PANELS REQUIRED. PANEL QUANTITY SHALL BE SUFFICIENT TO PROVIDE REQUIRED ACCESS WHETHER OR NOT INDICATED ON THE DRAWINGS. VERIFY FINAL LOCATIONS WITH ARCHITECT PRIOR TO STARTING WORK.
G REFER TO FINISH PLANS FOR ADDITIONAL CEILING FINISH INFORMATION.
H REFER TO ELECTRICAL LIGHTING DRAWINGS FOR CEILING-MOUNTED LIGHT FIXTURE TYPES AND QUANTITIES.
J REFER TO MECHANICAL DRAWINGS FOR CEILING-MOUNTED DIFFUSERS, GRILLE TYPES AND QUANTITIES.
K REFER TO FIRE PROTECTION DRAWINGS FOR SPRINKLER HEAD TYPES AND QUANTITIES. HEADS HAVE BEEN INTENTIONALLY OMITTED FROM REFLECTED CEILING PLANS FOR CLARITY.

GENERAL NOTES - DOORS AND FRAMES

A REFER TO WALL SECTIONS AND INTERIOR PARTITION TYPES FOR ADDITIONAL NOTES REGARDING TYPICAL WALL CONSTRUCTION.
B ALL FIRE RATED DOORS SHALL BE CATEGORY "A" POSITIVE PRESSURE RATED COMPLYING WITH THE REQUIREMENTS OF UL 10C TESTING. ADDITIONAL INTUMESCENT SEALS SHALL NOT ACCEPTABLE.
C GROUT FULL NEW HOLLOW METAL DOOR FRAMES IN MASONRY WALL CONSTRUCTION.
D SPOT GROUT NEW HOLLOW METAL DOOR FRAMES IN GYPSUM BOARD WALL CONSTRUCTION.
E WHERE A FIRE RATING IS INDICATED ON THE DOOR SCHEDULE, HARDWARE AND DOOR ASSEMBLY COMPONENTS SHALL MEET THE REQUIREMENTS OF THAT LABEL.
G AT DOORS WITH GLASS LITES, BOTTOM OF GLASS MUST BE NO HIGHER THAN 43" WHEN INSTALLED.

GENERAL NOTES - FINISHES

A REFER TO FINISH PLANS, REFLECTED CEILING PLANS, INTERIOR ELEVATIONS, ROOM FINISH SCHEDULE, & FINISH MATERIAL SCHEDULE FOR FINISH MATERIAL LOCATIONS & INFORMATION.
B REFER TO CASEWORK DRAWINGS FOR LAMINATE AND SOLID SURFACE LOCATIONS.
C PAINT NEW & EXISTING HOLLOW METAL DOORS, DOOR FRAMES xxxxxxxxxxxxxxxxxxxxP-2, U.N.O.
D PAINT NEW & EXISTING STEEL COLUMNS, BEAMS, STRUCTURE, INTERIOR AND EXTERIOR LINTELS, ETC., EXPOSED TO VIEW IN FINISHED AREAS xxxxxxxxxxxxxxxxxxxxP-2, U.N.O.
E PAINT NEW & EXISTING GRILLES TO MATCH COLOR OF THE WALLS IN WHICH THEY ARE LOCATED, UNLESS NOTED OTHERWISE.
F PAINT INTERIOR AND EXTERIOR LADDERS, BRACKETS, ETC., U.N.O.
G FINISH SOFFITS, BULKHEADS, AND SIMILAR CONDITIONS TO MATCH SURROUNDING SURFACES UNLESS OTHERWISE INDICATED. ONLY VERTICAL FACES OF SOFFITS TO BE PAINTED WITH WALL COLOR - HORIZONTAL SURFACES TO BE PAINTED CEILING WHITE, FLAT.
H IN STAIRWELLS, PAINT NEW & EXISTING STEEL STAIR AND LANDING PARTS EXPOSED TO VIEW INCLUDING RISERS AND TREADS, STRINGERS, UNDERSIDE OF STAIR STRUCTURE, HANDRAILS, WALL BRACKETS, COMPONENTS VISIBLE FROM EXTERIOR, ETC., U.N.O.
J PROVIDE FINISHES BEHIND FIXED EQUIPMENT SUCH AS CABINETRY, CASEWORK, CHALK AND TACKBOARDS, LOCKERS, ETC.
K ALIGN FLOOR FINISH TRANSITIONS AT DOOR LOCATIONS WITH CENTERLINE OF DOOR SUCH THAT TRANSITION MATERIALS ARE NOT VISIBLE FROM EITHER SIDE WHEN DOOR IS IN CLOSED POSITION.
L FLOORING NOT NOTED AS ACCENT AREAS SHALL RECEIVE FIELD FLOORING - SEE FINISH MATERIAL SCHEDULE AND ROOM FINISH SCHEDULE FOR ADDITIONAL DETAILS.
M FOR FLOOR TRANSITIONS SHOWN, REFER TO DETAILS xxxxxxxxxxxxxxxxxxxxxxxxxxxxxx
N ALL FLOORING SHALL EXTEND UNDER KNEE SPACES AND COUNTERS.
P WALLS NOT NOTED AS ACCENT PAINT SHALL RECEIVE FIELD PAINT, P-1.
Q INSIDE CORNER OF TILE WALLS SHALL RECEIVE SEALANT JOINT IN LIEU OF GROUT, U.N.O.

GENERAL NOTES - PARTITION TYPES

A REFER TO FLOOR PLANS FOR LOCATIONS OF ALL INTERIOR PARTITION CONTROL JOINTS.
B PROVIDE CONTROL JOINTS (C.J.) IN GYPSUM BOARD WALL CONSTRUCTION AS INDICATED. WHERE NOT SHOWN, PROVIDE MAXIMUM SPACING BETWEEN JOINTS OF 30'-0." VERIFY FINAL CONTROL JOINT LOCATIONS WHETHER OR NOT INDICATED ON THE DRAWINGS WITH ARCHITECT PRIOR TO STARTING WORK.
C PROVIDE CONTROL JOINTS (C.J.) IN MASONRY WALL CONSTRUCTION AS INDICATED. WHERE NOT SHOWN, PROVIDE MAXIMUM SPACING BETWEEN JOINTS OF 20'-0" AND MAXIMUM DISTANCE BETWEEN OUTSIDE CORNERS AND JOINTS OF 10'-0." PROVIDE JOINTS BETWEEN INTERIOR LOAD BEARING AND NON-LOAD BEARING PARTITIONS, AT ALL ABRUPT CHANGES IN WALL HEIGHT, AT CHANGES IN PARTITION THICKNESS AND AT PILASTER LOCATIONS. VERIFY FINAL CONTROL JOINT LOCATIONS WHETHER OR NOT INDICATED ON THE DRAWINGS WITH ARCHITECT PRIOR TO STARTING WORK.
D REFER TO A-702FOR CONTROL JOINT DETAILS, INCLUDING CONTROL JOINT DETAILS FOR FIRE-RATED WALLS.
E REFER TO A-702 FOR THE DEFLECTION TRACK DETAIL TO BE USED AT ALL PARTITIONS CONNECTED TO STRUCTURE OR BRACED TO STRUCTURE.
F PROVIDE 5/8" TYPE X GYPSUM BOARD UNLESS NOTED OTHERWISE.
G PROVIDE MOLD AND MOISTURE RESISTANT GYPSUM BOARD ON THE ROOM SIDE OF WALLS IN ROOMS 112 AND 110, AND ON THE INTERIOR FACE OF ALL EXTERIOR WALLS AND WITHIN 4'-0" IN ALL DIRECTIONS OF ALL OPERABLE PLUMBING FIXTURES.
H PROVIDE TILE BACKING PANELS WHERE TILE IS INDICATED - REFERE TO THE FINISH SCHEDULE AND INTERIOR ELEVATIONS. STOP BACKING PANELS 1" BELOW TOP OF TILE.
K INTERIOR STUD SPACING SHALL BE MAXIMUM 16" ON CENTER UNLESS NOTED OTHERWISE.
L GAUGE, SPACING, AND PERFORMANCE REQUIREMENTS OF METAL STUDS SHALL BE DETERMINED BY SPECIFICATION, UNO.
O FOR UL DETAILS SHOWN, REFER TO SHEETS xxxxxxxx FOR ADDITIONAL ASSEMBLY INFORMATION.
Q ALL CURVED SURFACES TO RECEIVE LEVEL 5 GYPSUM BOARD FINISH.
R ALL GYPSUM PARTITIONS GREATER THAN 15'-0" OF EXPOSED HEIGHT, INCLUDING STAIR WALLS, SHALL RECEIVE LEVEL 5 GYPSUM BOARD FINISH.
S PROVIDE CONTINUOUS ACOUSTIC SEALANT AT THE BASE OF ALL WALLS, U.N.O.
T PROVIDE CONTINUOUS ACOUSTIC SEALANT AT BASE AND TOP OF ACOUSTIC RATED WALLS - REFER TO PARTITION TYPES SCHEDULE FOR STC RATING
U PROVIDE CONTINOUS ACOUSTIC SEALANT AT TOP OF WALL WHEN GYPSUM BOARD EXTENDS TO DECK - REFER TO PARTITION TYPES SCHEDULE
V DO NOT SUSPEND BULKHEADS AND SOFFITS FROM STEEL ROOF DECKING. BULKHEADS AND SOFFITS SHALL BE SUPPORTED FROM STRUCTURE OR FRAMED BETWEEN WALLS.

GENERAL NOTES - ROOFING

A VERIFY SIZE, LOCATION AND NUMBER OF ROOF PENETRATIONS INCLUDING VENTS, PIPES, CURBS, ROOF DRAINS, CONDUITS, ETC. PROVIDE NEW FLASHING AND SEAL PENETRATIONS WHETHER OR NOT INDICATED ON THE DRAWINGS.
B COMPLETE WORK ABOVE ROOF, SUCH AS MASONRY, WELDING, MASONRY RESTORATION, ETC., PRIOR TO STARTING ROOFING WORK.
C VERIFY AND MAINTAIN ROOF SLOPES AND DRAINAGE PATTERNS. TEST FOR AND CORRECT ANY PONDING CONDITIONS.
D REPAIR AND REPLACE ROOFING SYSTEM OR STRUCTURE DAMAGED BY IMPROPER STORAGE, CONSTRUCTION ACTIVITIES, OR LACK OF ADEQUATE TEMPORARY PROTECTION. THIS ALSO INCLUDES INTERIOR DAMAGE TO FINISHES, EQUIPMENT, FURNISHINGS, ETC., RESULTING FROM LEAKS.
E NEW BLOCKING SHALL BE PRESERVATIVE-TREATED WOOD.
F CAP FASTENERS THAT PENETRATE ROOF DECK IN AREAS NOT CONCEALED BY CEILINGS WITH WIRE NUTS OR OTHER MEANS ACCEPTABLE TO ARCHITECT UNLESS OTHERWISE INDICATED. AREAS SUCH AS JANITOR CLOSETS, STORAGE ROOMS, MECHANICAL AND ELECTRICAL EQUIPMENT ROOMS, ETC., ARE EXEMPT FROM THIS REQUIREMENT UNLESS OTHERWISE INDICATED.

GENERAL NOTES - SIGNAGE

A ALL INTERIOR SIGNAGE (TEXT, BRAILLE, PICTOGRAMS, SIZES, ETC) SHALL CONFORM WITH ICC/ANSI A117.1 'ACCESSIBLE AND USABLE BUILDINGS AND FACILITIES', CHAPTER 703.
B ALL PERMANENT SIGNAGE TEXT TO BE VERIFIED WITH OWNER PRIOR TO FABRICATION.
C REFER TO DRAWING xxxxxxxxxxxxxxxxxxxxxxxx FOR SIGNAGE SCHEDULE AND SIGNAGE TYPES SHOWN.
D MOUNT ANY INTERIOR SIGNAGE ON LATCH SIDE OF DOOR.

ARCHITECTURAL DIMENSIONING

1. EXCEPT WHERE DIRECTED TO PLACE ITEMS OF THE WORK AT THE "APPROXIMATE LOCATION SHOWN," DO NOT SCALE DRAWINGS FOR DIMENSIONAL INFORMATION.

2. ALL ELEMENTS OF THE DRAWINGS MAY NOT BE DRAWN TO EXACT SCALE. ALL DIMENSIONS REQUIRED ARE SHOWN (OR MAY BE DERIVED FROM THOSE SHOWN OR NOTED) ON THE FLOOR PLANS, DETAIL PLANS, ELEVATIONS, SECTIONS, SCHEDULES, CONFIGURATION DETAILS, AND SPECIFICATIONS. SEE THE NOTES BELOW AND SYMBOLS ON SHEET G-101 FOR DIMENSIONING CONVENTIONS USED ON THIS PROJECT.

3. EXCEPT WHERE SPECIFICALLY NOTED TO THE CONTRARY, ALL DIMENSIONS SHOWN ON THE ARCHITECTURAL DRAWINGS CONFORM TO THE FOLLOWING CONVENTIONS:

A. DIMENSIONS UTILIZING THE "CENTERLINE" SYMBOL ARE MEASURED TO:

- STRUCTURAL OR DIMENSIONAL GRID LINES.
- CENTERLINE OF CONCRETE OR CONCRETE MASONRY UNIT WALLS (EXCLUSIVE OF FURRING OR APPLIED FINISHES HAVING THICKNESS). REFER TO THE ARCH PLANS AND SECTIONS, THE STRUCTURAL DRAWINGS, OR PARTITION SCHEDULE TO DETERMINE THE THICKNESS OF CONCRETE OR CONCRETE MASONRY UNIT WALLS.
- CENTERLINE OF PARTITION ASSEMBLY (EXCLUSIVE OF ANY APPLIED FINISHES HAVING THICKNESS WHICH MAY BE ADDED TO SUCH WALLS) AT PARTITIONS FRAMED WITH METAL STUDS. REFER TO "PARTITION SCHEDULE" TO DETERMINE THICKNESS OF EACH PARTITION TYPE.
- CENTERLINE OF DOOR, WINDOW, OR LOUVER OPENING.
- CENTERLINE OF EQUIPMENT OR FURNISHING.
- CENTERLINE OF OTHER FEATURES AS INDICATED.

B. REFER TO SHEET G-101 FOR SYMBOL USED TO INDICATE CENTERLINE DIMENSION.

C. DIMENSIONS UTILIZING THE "CLEAR" DESIGNATION ARE MEASURED TO:

- FACE OF CONCRETE OR CONCRETE MASONRY UNIT WALL (EXCLUSIVE OF APPLIED FINISHES HAVING THICKNESS OR FURRING WHICH MAY BE ADDED TO THE FACE OF SUCH WALLS).
- FACE OF PARTITION ASSEMBLY (EXCLUSIVE OF ANY APPLIED FINISHES HAVING THICKNESS WHICH MAY BE ADDED TO SUCH WALL) AS DEFINED BY THE PARTITION SCHEDULE. UNLESS NOTED AS A "FACE OF FINISH" OR "CLEAR" DIMENSION (SEE NOTE 'E' BELOW), DIMENSIONS ARE NOT MEASURED TO THE FACE OF APPLIED FINISH. REFER TO THE "PARTITION SCHEDULE" TO DETERMINE THE THICKNESS OF EACH PARTITION TYPE.
- INSIDE EDGE OF FINISHED DOOR OPENING. REFER TO THE "DOOR SCHEDULE" FOR ADDITIONAL DIMENSIONAL INFORMATION.
- DIMENSION OR WORK POINT AS INDICATED ON RELATED ARCH. DETAIL PLAN, SECTION, ELEVATION, LAYOUT OR CONFIGURATION DETAIL, OR CONSTRUCTION DETAIL.

D. WHERE "FACE OF FINISH" OR "CLEAR" DIMENSIONS ARE SPECIFICALLY NOTED, THE DIMENSION IS MEASURED TO:

- FINISH FACES AT THE MOST NARROW OR CONSTRICTED POINTS OF SECTION WHERE DIMENSION IS SHOWN, WHEN THE DIMENSION OCCURS ACROSS AN OPEN SPACE. IN THIS CASE, A "FACE OF FINISH" DIMENSION IS EQUIVALENT TO A "CLEAR" DIMENSION.
- FINISH FACES AT THE WIDEST OR MOST EXPANSIVE POINTS OF THE SECTION THE DIMENSION IS SHOWN WHEN THE DIMENSION OCCURS ACROSS AN OBJECT OR GROUP OF OBJECTS.

E. WHERE "EQUAL" DIMENSIONS ARE USED ON REFLECTED CEILING PLANS TO LOCATE CEILING GRID WORK POINTS, MEASURE DIMENSIONS TO:

- EDGE OF THE INDICATED CEILING AT THE FACE OF THE ADJACENT APPLIED FINISH MEASURED AT THE PLANE OF THE CEILING.
- CAUTION: DUE TO THE POSSIBLE APPLICATION OF APPLIED FINISHED – THICKNESS OF WHICH MAY VARY BETWEEN FLOOR AND CEILING AND IS NOT ACCOUNTED FOR (EXCEPT AS INDICATED BY "FOF" OR "CLEAR") BY THE DIMENSION SHOWN ON THE FLOOR PLANS – THE CONTRACTOR MUST ADJUST, AS NECESSARY, THE FLOOR PLAN DIMENSIONS TO REFLECT THE ACTUAL DIMENSIONS FOUND AT PLANE OF THE CEILING.

4. WHERE DIMENSIONS ARE NOT PROVIDED ON FLOOR PLANS, TO LOCATE DOOR OPENINGS, APPLY THE FOLLOWING RULES, IN ORDER, TO DETERMINE THE LOCATION OF DOOR OPENINGS:

A. DOOR OPENINGS MAY BE DIMENSIONED ON DRAWINGS OTHER THAN THE FLOOR PLANS. REFER TO THE SECTIONS, ELEVATIONS, DETAILS, AND DOOR SCHEDULE NOTES FOR ADDITIONAL DIMENSIONAL INFORMATION.

B. WHERE THE HINGE-SIDE OF A DOOR IS SHOWN ADJACENT TO A WALL-OR WALLS-PERPENDICULAR TO THE WALL IN WHICH THE DOOR OPENING OCCURS:

- EXAMPLE 'A': AT DOORS OCCURRING IN METAL FRAMED GYPSUM BOARD PARTITIONS, LOCATE THE HINGE-SIDE OF THE DOOR 6 INCHES FROM THE FACE (EXCLUSIVE OF APPLIED FINISHES) OF THE CLOSEST PERPENDICULAR WALL OR PARTITION ASSEMBLY.
- EXAMPLE 'B': AT DOORS OCCURRING IN WALLS OF CONCRETE MASONRY UNIT CONSTRUCTION, LOCATE THE HINGE-SIDE OF THE DOOR FINISHED OPENING 10 INCHES FROM THE FACE (EXCLUSIVE OF APPLIED FINISHES) OF THE CLOSEST PERPENDICULAR WALL OR PARTITION ASSEMBLY.

C. WHERE DOOR OCCURS NOT ADJACENT TO A PERPENDICULAR WALL AND EITHER "DIM E" OR "DIM F" IS 16'-0" OR LESS, LOCATE DOOR UTILIZING THE FOLLOWING MINIMUM DIMENSIONS (EXAMPLE 'C'):

- DIMENSION A = 18 INCHES MIN
- DIMENSION B = 12 INCHES MIN
- DIMENSION C = DOOR WIDTH + 2 INCHES MINIMUM
- DIMENSION D = 4 INCHES MIN AT METAL FRAMED GYP BD PARTITIONS OR-EVEN MULTIPLE OF ½ CMU MODULE PLUS 2 INCHES AT CONCRETE MASONRY UNIT WALLS
- DIMENSIONS E AND F = AS SHOWN ON PLANS
- DIMENSION G = 36 INCHES MIN
- DIMENSION H = 60 INCHES MIN
- IF SPACE ALLOWS, CENTER DOOR IN WALL SHOWN ON THE DRAWINGS SO THAT EITHER "DIM A" EQUALS "DIM C" OR "DIM B" EQUALS "DIM D"

D. IF "DIM E" IN DIAGRAMS SHOWN IS LESS THAN THE SUM OF 2 TIMES THE DOOR WIDTH PLUS 20 INCHES, LOCATE DOOR SO THAT MINIMUMS STATED BY NOTE NO 4C ABOVE FOR "DIM A", "DIM B", AND "DIM D" ARE MET – MAXIMIZING "DIM A" AND MINIMIZING "DIM D" TO THE EXTENT POSSIBLE (EXAMPLE 'D').

E. WHERE DOOR IS SHOWN LOCATED IN A LARGE EXPANSE OF OPEN WALL ("DIM E" AND "DIM F" IN DIAGRAM BELOW BOTH EXCEED 16'-0"), PLACE DOOR AT APPROXIMATE LOCATION SHOWN ON THE PLANS. WHERE DOOR OCCURS IN CMU WALL, PLACE DOOR AT APPROXIMATE LOCATION SHOWN WHILE MINIMIZING "CUT" OR PARTIAL CMU MODULES ADJACENT TO THE JAMBS (EXAMPLE 'E').

5. WHERE WALLS AND/OR PARTITIONS OF UNEQUAL THICKNESS ABUT, ALIGN EXPOSED FACES, UNLESS OTHERWISE NOTED (EXAMPLE 'F')

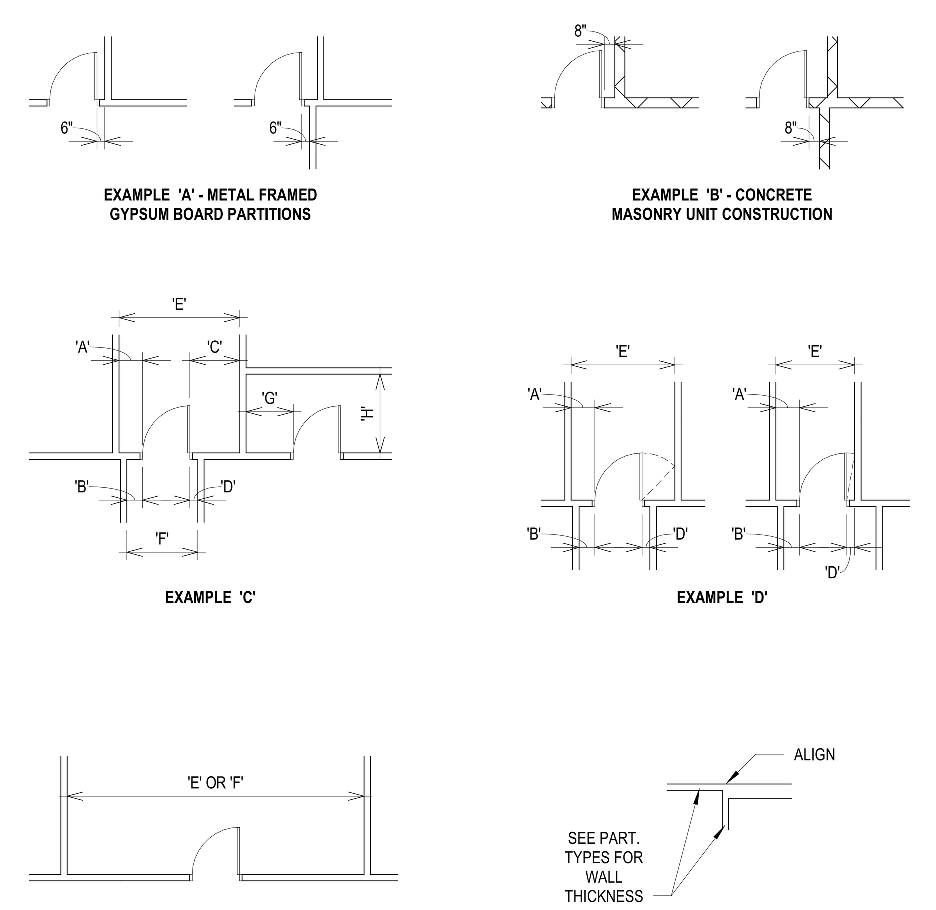

EXAMPLE 'A' - METAL FRAMED GYPSUM BOARD PARTITIONS

EXAMPLE 'B' - CONCRETE MASONRY UNIT CONSTRUCTION

EXAMPLE 'C'

EXAMPLE 'D'

EXAMPLE 'E'

EXAMPLE 'F'

JRA architects
3225 Summit Square Place, Suite 200
Lexington, Kentucky 40509
859.252.6781

NOT FOR CONSTRUCTION

RESERVED FOR AHJ STAMP

RFP 2 DRAWINGS

UK INDOOR TRACK FACILITY

UNIVERSITY OF KENTUCKY
700 SPORTS CENTER DRIVE LEXINGTON, KENTUCKY 40506

GENERAL

PROJECT	202258
DATE	08/31/2022

REVISIONS

No.	Description	Date

JRA ARCHITECTS HAS RETAINED AN ELECTRONIC VERSION OF THESE DRAWINGS. THE CLIENT AGREES NOT TO REUSE THESE DRAWINGS - IN ELECTRONIC OR ANY OTHER FORMAT - IN WHOLE, OR IN PART, FOR ANY PURPOSE OTHER THAN FOR THE PROJECT. THE CLIENT AGREES NOT TO TRANSFER THESE ELECTRONIC FILES TO OTHERS WITHOUT THE PRIOR WRITTEN CONSENT OF THE ARCHITECT. THE CLIENT FURTHER AGREES TO WAIVE ALL CLAIMS AGAINST THE ARCHITECT RESULTING IN ANY WAY FROM ANY UNAUTHORIZED CHANGES TO OR REUSE OF THE ELECTRONIC FILES FOR ANY OTHER PROJECT BY ANYONE OTHER THAN THE ARCHITECT.

INFORMATION DRAWING

G-101

COPYRIGHT 2022 - JRA, INC.

9/1/2022 3:38:12 PM

TYPICAL RULES FOR DETERMINING REFLECTED CEILING PLAN ELEMENT LOCATIONS AND LAYOUT

LOCATE ITEM AS INDICATED WHEN SHOWN DIMENSIONED BY REFLECTED CEILING PLAN, ENLARGED REFLECTED CEILING PLAN, OR DETAIL

SPECIFIC DIMENSIONS SHOWN BY REFLECTED CEILING PLANS, ELEVATIONS, OR DETAILS TAKE PRECEDENCE OVER TYPICAL LOCATION RULES

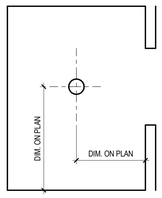

RULE 1

WHEN ELEMENT IS COMPLETELY DIMENSIONED ON REFLECTED CEILING PLAN

LOCATE ITEM CENTERED IN SPACE (OR CEILING PLANE) WHEN SHOWN (BUT NOT DIMENSIONED) GRAPHICALLY AT APPROXIMATE CENTER OF SPACE

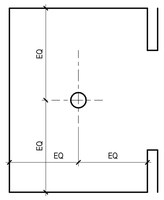

RULE 2

WHEN NOT DIMENSIONED, BUT SHOWN CENTERED

LOCATE ITEMS CENTERED ON ADJACENT OPENING, ELEMENT, OR FEATURE WHEN SHOWN (BUT NOT DIMENSIONED) OFF-CENTER IN OVERALL SPACE BUT CENTERED AGAINST ADJACENT ELEMENT

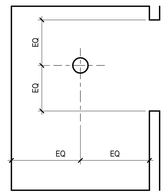

RULE 3

WHEN OFF CENTER IN SPACE BUT CENTERED ON ADJACENT ELEMENT

LOCATE ITEMS (LIGHT FIXTURES, SPRINKLER HEADS, DEVICES, ETC.) ALIGNED WITH ADJACENT ITEMS FOR WHICH DIMENSIONS OR RULES ARE PROVIDED. VISUAL ALIGNMENT IS CRITICAL. THE CONTRACTOR SHALL SELECT ONE ITEM IN EACH LINE (ON BASIS OF TOLERANCE, SEQUENCE OF CONSTRUCTION, TRADE, OR OTHER CRITERIA) TO SERVE AS THE ALIGNMENT BENCHMARK.

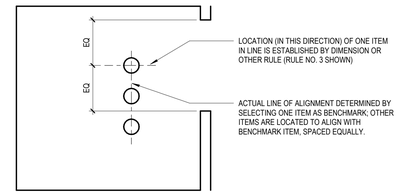

RULE 4

WHEN ALIGNED WITH OTHER FEATURES

LOCATE ITEMS ALIGNED WITH OTHER ITEMS SHOWN DIMENSIONED ELSEWHERE IN SPACE (OR CEILING PLANE)

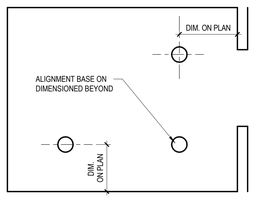

RULE 5

ALIGN WITH FEATURES SHOWN DIMENSIONED ELSEWHERE IN SPACE

LOCATE ITEMS ALIGNED WITH OTHER ITEMS SHOWN DIMENSIONED ELSEWHERE IN SPACE (OR CEILING PLANE)

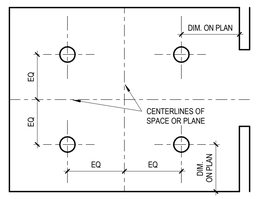

RULE 6

LOCATE ELEMENTS SYMMETRICALLY

LOCATE ITEMS (LIGHT FIXTURES, SPRINKLER HEADS, DEVICES, ETC.) AT CENTER OF PANEL ON SQUARE GRID CEILINGS

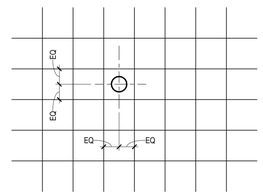

RULE 7

WHEN NOT DIMENSIONED BUT OCCURS IN SQUARE PANEL

LOCATE ITEMS (LIGHT FIXTURES, SPRINKLER HEADS, DEVICES, ETC.) AT CENTER OF SHORT PANEL DIRECTION AND 1/4, 1/2, OR 3/4 POINT OF LONG PANEL DIRECTION

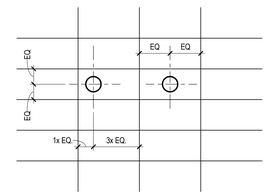

RULE 8

WHEN NOT DIMENSIONED BUT OCCURS IN RECTANGULAR PANEL

GENERAL NOTES - LAYOUT

A THE G-SERIES OF DRAWINGS ESTABLISH AND COORDINATE THE FINISHED APPEARANCE AND LOCATION OF ALL EXPOSED ELEMENTS. THE G-SERIES DRAWINGS TAKE PRECEDENCE FOR THE FINISHED APPEARANCE AND LOCATION OF ALL PARTS OF THE WORK.

EXCEPTION: DIMENSIONED LOCATIONS SHOWN ON DRAWINGS OF OTHER DISCIPLINES SHALL GOVERN ONLY WHERE THE FOLLOWING CONDITIONS OCCUR:

A. SPECIFICALLY AND INDIVIDUALLY INDICATED BY SYMBOL, KEYED NOTE, OR NOTATION ON THE ARCHITECTURAL DRAWINGS.

B. OCCURRING WITHIN A ROOM OR OTHER IDENTIFIABLE SPACE FOR WHICH ARCHITECTURAL SHEET OF SCHEDULE NOTES INDICATE THAT DIMENSIONS PROVIDED ELSEWHERE SHALL GOVERN.

B THE PURPOSE OF THIS SHEET IS TO ILLUSTRATE THE TYPICAL RULES WHICH GOVERN THE LOCATION, CONFIGURATION IN RELATIONSHIP TO OTHER ELEMENTS OF THE WORK, AND FINISHED ALIGNMENT OF ALL ITEMS OCCURRING ON PLANS AND REFLECTED CEILING PLANS OF THE PROJECT.

C THE A-SERIES FLOOR PLANS, REFLECTED CEILING PLANS, SECTIONS, ELEVATIONS, AND DETAILS ILLUSTRATE DIMENSIONED LOCATION OF MANY, BUT NOT ALL, EXPOSED PARTS OF THE WORK. APPLY THE LAYOUT RULES SHOWN ON THIS SHEET – IN ORDER – TO DETERMINE THE LOCATION OF THE EXPOSED PART OF THE WORK.

A. WHEN UNIQUELY AND SPECIFICALLY DIMENSIONED ON THE A-SERIES PLANS, SECTIONS, OR ELEVATIONS (OR COMBINATION THEREOF), LOCATE AS DIMENSIONED.

B. IF NOT SHOWN, OR SHOWN BUT NOT DIMENSIONED, BY THE A-SERIES PLANS OR ELEVATIONS, LOCATE AS INDICATED BY THE APPLICABLE RULE.

D REFER TO THE "GENERAL NOTES" FOR ADDITIONAL NOTES WHICH APPLY TO THE ENTIRE PROJECT.

GENERAL NOTES - ACCESSORY MOUNTING HEIGHTS

A IT IS THE INTENT OF THE DESIGN THAT ALL ITEMS SHOWN MOUNTED AT TYPICAL HEIGHTS BE ACCESSIBLE TO PERSONS WITH DISABILITIES.

B THE PURPOSE OF THIS SHEET IS TO ILLUSTRATE TYPICAL MOUNTING HEIGHTS AND – WHERE APPLICABLE – TYPICAL MINIMUM OR MAXIMUM CLEARANCES AND/OR TYPICAL MOUNTING CONFIGURATIONS FOR A VARIETY OF ITEMS. CAUTION: THIS SHEET MAY ILLUSTRATE ITEMS OR CONFIGURATIONS WHICH DO NOT OCCUR AS PART OF THE WORK OF THIS PROJECT. REFER TO THE PLANS, ELEVATIONS, SECTIONS, DETAILS AND SCHEDULES TO DETERMINE WHICH ITEMS AND CONFIGURATIONS APPLY TO THE WORK OF THIS PROJECT.

C THE MOUNTING HEIGHTS, CLEARANCES, AND CONFIGURATIONS SHOWN ON THIS SHEET ARE TYPICAL AND SHALL APPLY TO ALL INSTANCES OF THE ITEM (OR GROUP OF ITEMS) SHOWN UNLESS SPECIFICALLY NOTED OR DIMENSIONED OTHERWISE.

D SPECIAL OR NON-TYPICAL MOUNTING HEIGHTS OCCUR ONLY WHERE INDICATED BY ANNOTATED SYMBOLS; BY KEY NOTES; BY NOTES ON PLANS, ELEVATIONS, OR DETAILS; OR BY UNIQUE DIMENSIONS ON ELEVATIONS OR DETAILS.

E MOUNTING HEIGHTS, DIMENSIONS, CLEARANCES, AND ACCESS REQUIREMENTS FOR TOILET ACCESSORIES SHOWN ON THIS SHEET ARE BASED UPON SPECIFIC MANUFACTURERS AND MODELS AS INDICATED BY THE "EQUIPMENT SCHEDULE". WHEN SIMILAR ACCESSORIES OF OTHER SPECIFIED ACCEPTABLE MANUFACTURES (IF ANY) ARE UTILIZED, MOUNTING HEIGHTS, CLEARANCES, AND ACCESS REQUIREMENTS OF THE SIMILAR ACCESSORIES MAY VARY FROM THOSE SHOWN. WHEN SIMILAR ACCESSORIES ARE UTILIZED, THE CONTRACTOR SHALL BE RESPONSIBLE FOR ALL COORDINATION REQUIRED TO ACHIEVE THE SAME AESTHETIC AND FUNCTIONAL DESIGN INTENT ILLUSTRATED BY THAT SHOWN ON THE DRAWINGS.

F TACTILE EXIT SIGNS. A TACTILE EXIT SIGN STATING "EXIT" AND COMPLYING WITH ANSI A117.1 SHALL BE PROVIDED ADJACENT TO EACH DOOR TO AN EGRESS STAIRWAY, AN EXIT PASSAGEWAY AND EXIT DISCHARGE.

FIXTURE, DEVICE, AND ACCESSORY MOUNTING HEIGHTS

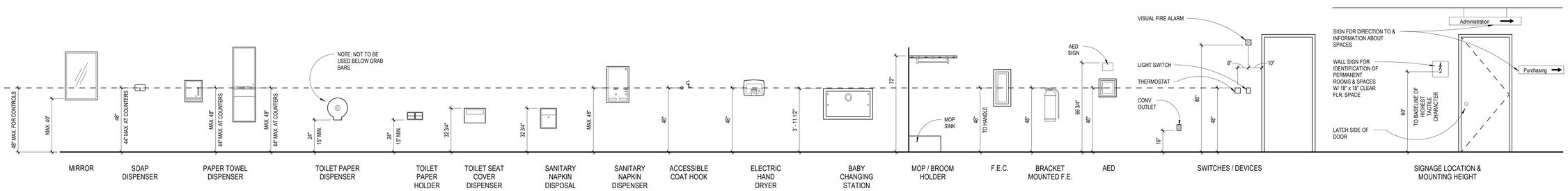

TOILET ACCESSORIES, DEVICE, AND EQUIPMENT MOUNTING HEIGHTS

(NOTE: SOME ITEMS SHOWN MAY NOT BE APPLICABLE TO THE PROJECT)

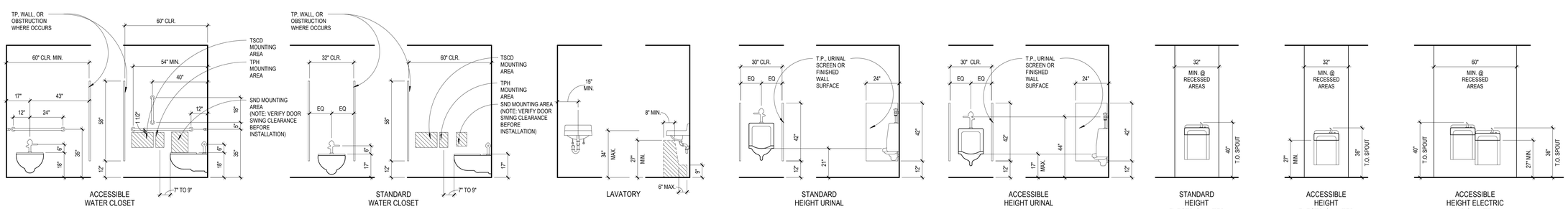

PLUMBING FIXTURES AND ACCESSORIES MOUNTING HEIGHTS

(NOTE: SOME ITEMS SHOWN MAY NOT BE APPLICABLE TO THE PROJECT)

JRA architects
3225 Summit Square Place, Suite 200
Lexington, Kentucky 40509
859.252.6781

NOT FOR CONSTRUCTION

RESERVED FOR AHJ STAMP

RFP 2 DRAWINGS

UK INDOOR TRACK FACILITY

UNIVERSITY OF KENTUCKY
700 SPORTS CENTER DRIVE LEXINGTON, KENTUCKY 40506

GENERAL

PROJECT	202258
DATE	08/31/2022

REVISIONS

No.	Description	Date

JRA ARCHITECTS HAS RETAINED AN ELECTRONIC VERSION OF THESE DRAWINGS. THE CLIENT AGREES NOT TO REUSE THESE DRAWINGS - IN ELECTRONIC OR ANY OTHER FORMAT - IN WHOLE, OR IN PART, FOR ANY PURPOSE OTHER THAN FOR THE PROJECT. THE CLIENT AGREES NOT TO TRANSFER THESE ELECTRONIC FILES TO OTHERS WITHOUT THE PRIOR WRITTEN CONSENT OF THE ARCHITECT. THE CLIENT FURTHER AGREES TO WAIVE ALL CLAIMS AGAINST THE ARCHITECT RESULTING IN ANY WAY FROM ANY CHANGES OR ADDITIONS TO OR REUSE OF THE ELECTRONIC FILES FOR ANY OTHER PROJECT BY ANYONE OTHER THAN THE ARCHITECT.

LOCATIONS AND LAYOUT RULES

G-102

COPYRIGHT 2022 - JRA, INC.

C:\Users\lburnett\OneDrive - JRA Architects\Documents\202258 - UK Indoor Track_lburnettNAL5.rvt
9/12/2022 3:38:14 PM

C:\Users\lburnett\OneDrive - JRA Architects\Documents\202258 - UK Indoor Track_lburnettNAL5.rvt

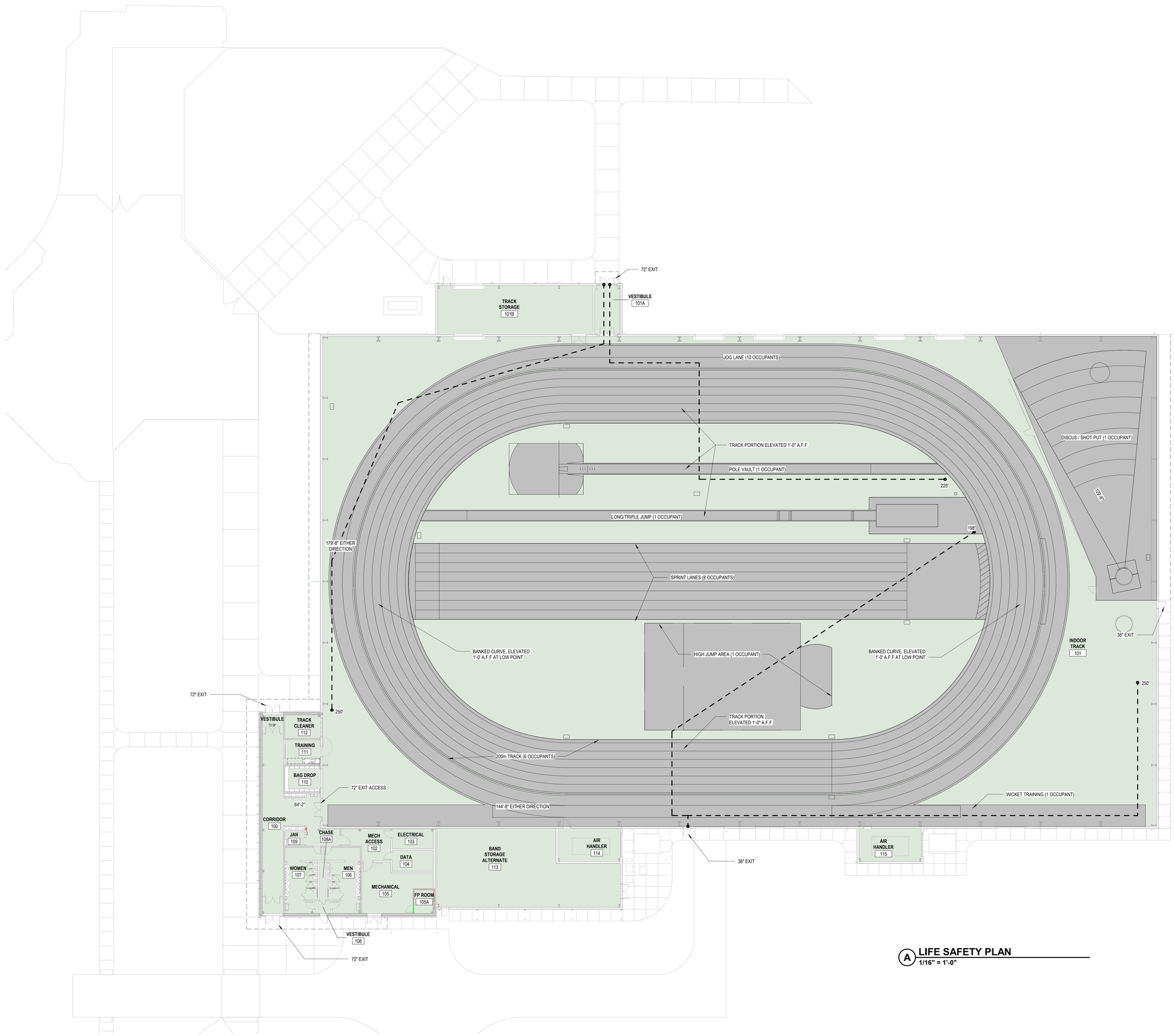

A LIFE SAFETY PLAN
1/16" = 1'-0"

BUILDING STATISTICS FOR NEW CONSTRUCTION (2018 KBC)

CHAPTER 3	
Use Group (Section 302):	(A-3) Assembly (Training/Practice Facility)
	(S-2) Storage
CHAPTER 5	
Basement (Section 502):	No
Construction (New, Renovation, Addition):	New
Number of Buildings:	1
Type of Construction (Table 601):	II-B
Actual Building Height (A-3):	Stories: 1, Height: +/- 56 feet
Allowable Height (A-3) (Table 504.3 & 4):	Stories: 3, Height: 75 feet
Allowable Area per Floor (A-3) (Table 506.2):	36,000 SF
Mezzanines (Section 505)	None
Area Modification for Frontage (Section 506.3):	Not Required
Unlimited Area (Section 507)	Unlimited Area Permitted per 507.6
Mixed Occupancy (Section 508):	
Accessory Occupancies	Accessory Occupancies <10%
	Separation not required
Incidental Use Areas (Table 509.1):	
Boiler Rooms over 15psi/10hp	Automatic suppression system w/ smoke barrier
CHAPTER 6	
Fire Resistive Rating Requirements (Table 601, Type II-B):	
Primary Structural Frame:	0 HR
Exterior Bearing Walls:	0 HR
Interior Bearing Walls:	0 HR
Exterior Non-Bearing Walls per 602:	0 HR > 30 Feet
Interior Non-Bearing Walls:	0 HR
Floor Construction:	0 HR
Roof Construction:	0 HR
Combustible Materials allowed in Type II (Section 603):	Yes, per Exceptions Listed
Gross Square Feet:	
First Floor (Base Bid)	78,722 GSF
First Floor (Band Storage)	2,188 GSF
Total Gross Square Footage (with Band Storage)	80,910 GSF
CHAPTER 7	
Fire Barriers (Section 707):	
CHAPTER 9	
For Occupancy (Section 903):	Required
Windowless Story (Section 903.2.11.1):	n/a
CHAPTER 10	
Occupant Load per Floor (Table 1004.1.2):	
First Floor (See Calculation) (Base Bid)	592 Occupants
First Floor (300 gross) (Band Storage)	7 Occupants
Total Building Occupant Load (with Band Storage)	599 Occupants
Egress Width per Occupant with Sprinkler (1005):	
Other: 0.15" x 854 =	128" per Section 1020.2
Spaces with One Means of Egress (Table 1006.2.1):	Maximum 49 Occupants
Minimum Number of Exits for Occupant Load (Table 1006.3.1):	2 per story (1-500 occupants)
Accesible Means of Egress (Section 1009):	2 per 1009.1
Area of Refuge (Section 1009.3 and 1009.4):	Not Required
Exit Access Travel Distance (Table 1017.2):	250 feet with sprinkler system
Corridor Rating (Table 1020. 1)	0 HR (w/ Sprinkler, > 30 Occupants)
Dead End Corridors (Section 1020.4):	20 for A-3
Exit Discharge (Section 1028):	Provide access to public way

OCCUPANCY CALCULATION:

ENTRANCE BLOCK: (200 S.F./PERSON - 50/50 BUSINESS/STORAGE)	3,950 S.F. = 20 OCCUPANTS
INDOOR TRACK (NON PRACTICE AREA): (50 S.F./PERSON)	26,729 S.F. = 535 OCCUPANTS
PRACTICE AREAS (SHOWN SHADED):	45,790 S.F. (29 OCCUPANTS)
TRACK:	6 OCCUPANTS
LONG JUMP:	1 OCCUPANT
SPRINT LANES:	8 OCCUPANTS
POLE VAULT:	1 OCCUPANT
HIGH JUMP:	1 OCCUPANT
DISCUS/SHOT PUT:	1 OCCUPANT
JOG LANE:	10 OCCUPANTS
WICKET TRAINING LANE:	1 OCCUPANT
TRACK STORAGE (300 S.F./PERSON):	1,339 S.F. = 5 OCCUPANTS
AIR HANDLERS (300 S.F./PERSON):	738 S.F. = 3 OCCUPANTS
BAND STORAGE (300 S.F./PERSON):	2,188 S.F. = 7 OCCUPANTS
TOTAL OCCUPANTS:	599 OCCUPANTS

PLUMBING FIXTURE COUNT:

	REQUIRED	PROVIDED
WATER CLOSETS		
MEN:	3	3
WOMEN:	5	5
LAVATORIES		
MEN:	3	5
WOMEN:	3	5
URINALS:	2	2
DRINKING FOUNTAINS:	2	2

RATED WALL LEGEND

2 - HOUR FIRE BARRIER

JRA architects
3225 Summit Square Place, Suite 200
Lexington, Kentucky 40509
859.252.6781

NOT FOR CONSTRUCTION

RESERVED FOR AHJ STAMP

RFP 2 DRAWINGS

UK INDOOR TRACK FACILITY
UNIVERSITY OF KENTUCKY
700 SPORTS CENTER DRIVE LEXINGTON, KENTUCKY 40506

GENERAL

PROJECT	202258
DATE	08/31/2022

REVISIONS

No.	Description	Date

JRA ARCHITECTS HAS RETAINED AN ELECTRONIC VERSION OF THESE DRAWINGS. THE CLIENT AGREES NOT TO REUSE THESE DRAWINGS - IN ELECTRONIC OR ANY OTHER FORMAT - IN WHOLE, OR IN PART, FOR ANY PURPOSE OTHER THAN FOR THE PROJECT. THE CLIENT AGREES NOT TO TRANSFER THESE ELECTRONIC FILES TO OTHERS WITHOUT THE PRIOR WRITTEN CONSENT OF THE ARCHITECT. THE CLIENT FURTHER AGREES TO WAIVE ALL CLAIMS AGAINST THE ARCHITECT RESULTING IN ANY WAY FROM ANY CHANGES OR ADDITIONS TO OR REUSE OF THE ELECTRONIC FILES FOR ANY OTHER PROJECT BY ANYONE OTHER THAN THE ARCHITECT.

LIFE SAFETY PLAN

G-103

COPYRIGHT 2022 - JRA, INC.

9/12/2022 3:38:19 PM

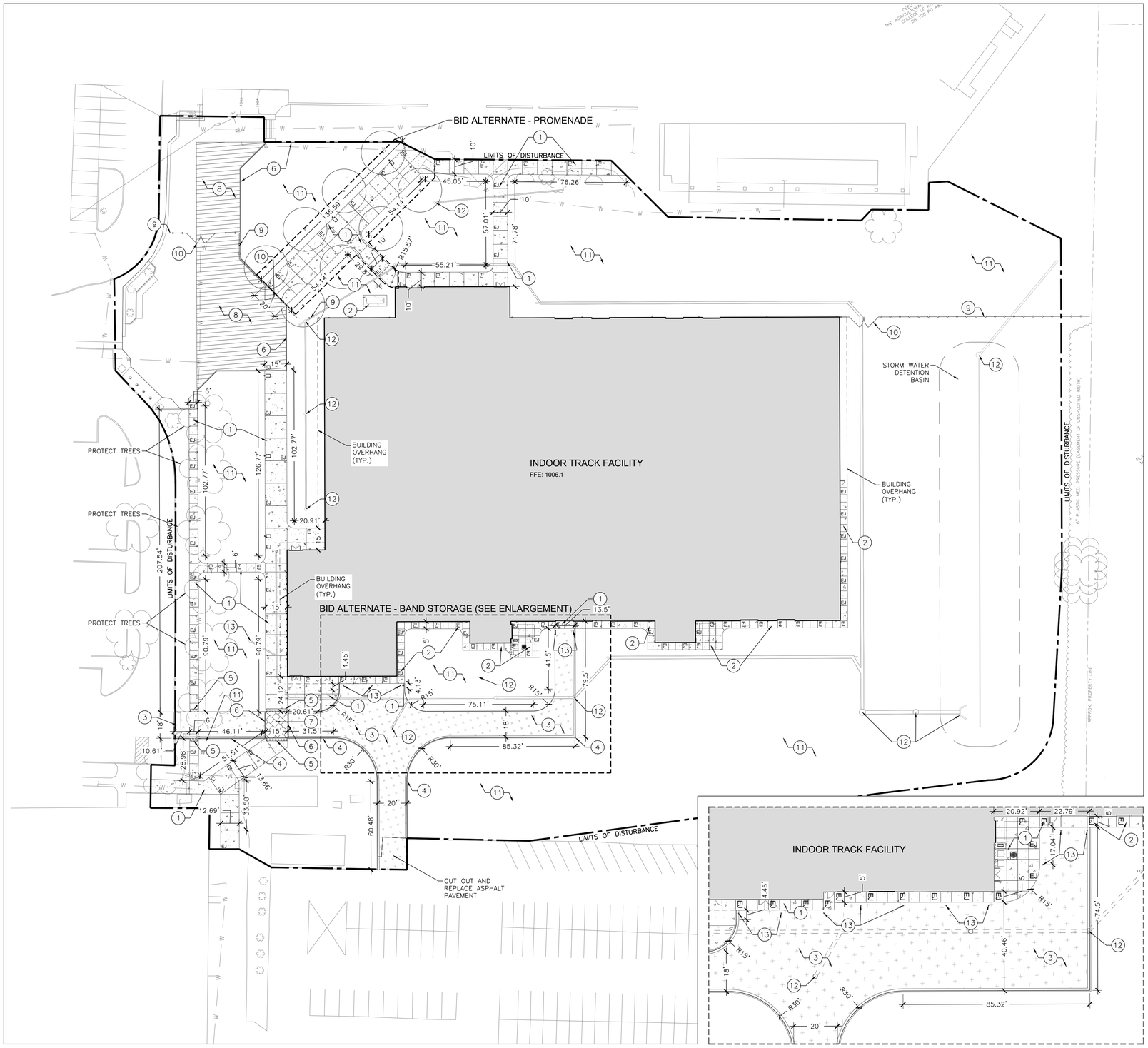

LAYOUT PLAN

SCALE: 1" = 30'

ENLARGEMENT: BID ALTERNATE - BAND STORAGE

SCALE: 1" = 20'

GENERAL LAYOUT NOTES:

1. DIMENSIONS ARE NOT TO BE SCALED. SHOULD DISCREPANCIES OCCUR WITH DIMENSIONS ON THESE PLANS, NOTIFY CARMAN FOR CLARIFICATION.
2. PRIOR TO CONSTRUCTION OR DEMOLITION, THE CONTRACTOR SHALL VERIFY THE LOCATION OF ALL UTILITIES, SO THAT NEW CONSTRUCTION WILL NOT DAMAGE OR INTERFERE WITH EXISTING UTILITY LINES. SHOULD DAMAGE OCCUR, IT IS THE CONTRACTOR'S RESPONSIBILITY TO REPAIR AND/OR REPLACE SAID DAMAGE AT THE CONTRACTOR'S EXPENSE.
3. CONTRACTOR SHALL PROVIDE HORIZONTAL AND VERTICAL CONTROL STAKING FOR THE CONSTRUCTION OF ALL SITE IMPROVEMENTS.
4. EXISTING SITE SURVEY INFORMATION PROVIDED BY: ENDRIS ENGINEERING 859-253-1425
5. COORDINATES AND ELEVATIONS PROVIDED ON THESE PLANS ARE BASED ON DATUM PROVIDED BY THE SURVEYOR.
6. THE CONTRACTOR SHALL UTILIZE COORDINATES FROM ELECTRONIC PLAN FILE FOR THE PURPOSE OF LAYOUT OF ALL SITE IMPROVEMENTS. THE LANDSCAPE ARCHITECT/CIVIL ENGINEER MAY PROVIDE THE ELECTRONIC FILE TO THE CONTRACTOR FOR THIS PURPOSE. THE CONTRACTOR SHALL NOTIFY THE LANDSCAPE ARCHITECT/CIVIL ENGINEER OF DISCREPANCIES BETWEEN THE PLANS AND THE ELECTRONIC FILE.
7. COORDINATES PROVIDED ON THE BUILDING CORNERS ARE TO BE USED FOR BUILDING ORIENTATION. COORDINATES ARE NOT TO BE USED FOR FOOTING AND/OR FOUNDATION LAYOUT.
8. IT IS THE CONTRACTOR'S OR SUBCONTRACTOR'S RESPONSIBILITY TO OBTAIN AND UTILIZE THE MOST CURRENT CONTRACT PLAN AND SPECIFICATION DOCUMENTS.
9. ALL DIMENSIONS ARE TAKEN AT FACE OF CURB OR WALL WHERE APPLICABLE.
10. ALL WORK, CONSTRUCTION REQUIREMENTS, AND PERFORMANCE STANDARDS SHALL COMPLY WITH LOCAL AND STATE STANDARDS.
11. NO MATERIAL SHALL BE WASTED IN A FLOOD PLAIN.
12. ALL HORIZONTAL AND VERTICAL STAKING IS TO BE BASED ON LOCAL BENCHMARK PROVIDED BY THE SURVEYOR.
13. EXPANSION JOINT MATERIAL IS TO BE USED ANYTIME NEW CONCRETE SIDEWALK, CURB OR PAVEMENT IS INSTALLED ADJACENT TO EXISTING CONCRETE SIDEWALK, CURB, PAVEMENT, FOOTING, BUILDING OR OTHER VERTICAL STRUCTURES.
14. EXISTING BUILDINGS, PAVEMENTS, SIDEWALKS, AND OTHER SITE IMPROVEMENTS SHALL BE PROTECTED DURING CONSTRUCTION. THEIR CONDITIONS SHALL BE PHOTOGRAPHICALLY DOCUMENTED PRIOR TO CONSTRUCTION. DAMAGE SHALL BE REPAIRED AT CONTRACTOR'S EXPENSE.
15. UPON REQUEST, A DIGITAL FILE MAY BE PROVIDED TO ASSIST IN LAYOUT OF NEW FEATURES.
16. ALL DISTURBED AREAS THAT ARE NOT DESIGNATED AS PAVED, BUILDING OR LANDSCAPE BEDS SHALL BE SODDED PER THE SPECIFICATIONS.
17. THE CONTRACTOR IS RESPONSIBLE FOR COMPLYING WITH ALL JOBSITE REQUIREMENTS OF THE OCCUPATIONAL SAFETY AND HEALTH ADMINISTRATION (OSHA)
18. SHOP DRAWINGS THAT DEPICT ANY VISIBLE SITE COMPONENTS SUCH AS SITE ACCESSORIES OR OTHER SITE COMPONENT THAT HAS A VISIBLE CHARACTER SHALL BE APPROVED BY THE OWNER AND LANDSCAPE ARCHITECT/CIVIL ENGINEER AT LEAST 90 DAYS PRIOR TO SUBSTANTIAL COMPLETION OR THE NECESSARY SCHEDULED TIME FOR INSTALLATION OF THE COMPONENT.
19. ALL SITE CONCRETE SHALL BE 4500 PSI.
20. ANY SUBMITTALS, PLANS, SHOP DRAWINGS, ETC. REQUIRING THE CERTIFICATION OF A LICENSED DESIGN PROFESSIONAL IN THE COMMONWEALTH OF KENTUCKY SUCH AS RETAINING WALLS, BLEACHERS, RAINWATER HARVESTING SYSTEMS, ETC. SHALL BE SUBMITTED BY THE CONTRACTOR TO THE LANDSCAPE ARCHITECT/CIVIL ENGINEER NO MORE THAN 30 DAYS AFTER THE CONTRACTOR RECEIVES A NOTICE TO PROCEED/CONTRACT FOR THE WORK FROM THE OWNER.
21. CONTRACTOR SHALL BE RESPONSIBLE FOR UTILIZING WASHED STONE/AGGREGATE OF THE SPECIFIED SIZE. UNWASHED STONE WITH FINES AND DUST IS NOT ACCEPTABLE. THE CONTRACTOR MAY CHOOSE THE MEANS AND METHODS TO ATTAIN THE FUNCTIONING INTENT FOR THE SPECIFIED AGGREGATE SIZE FOR PERMEABLE PAVEMENT SYSTEMS.
22. THESE SITE PLANS DO NOT RECOMMEND OR LOCATE ANY SHORING TECHNIQUES AS THIS IS A MEANS AND METHODS PERFORMANCE BY THE CONTRACTOR. SHOULD THE CONTRACTOR CHOOSE TO UTILIZE SHORING FOR ANY PURPOSE THE CONTRACTOR WILL BE REQUIRED TO MEET ANY AND ALL REQUIREMENTS FOR SHORING THAT IS REQUIRED BY LOCAL, STATE OR FEDERAL AGENCIES, INCLUDING THE OCCUPATIONAL SAFETY AND HEALTH ADMINISTRATION (OSHA). IT SHALL BE THE CONTRACTOR'S RESPONSIBILITY TO DETERMINE ANY SURFACE OR OR SUBSURFACE CONFLICTS THAT MAY OCCUR WITH THE LOCATION OR DEPTH OF ANY SHORING METHODS THE CONTRACTOR MAY EMPLOY.
23. THE CONTRACTOR SHALL KEEP SITE IMPROVEMENT PLANS AT THE SITE AT ALL TIMES WITH A RECORD OF ANY DESIGN MODIFICATIONS THAT HAVE OCCURRED WITH ANY SITE IMPROVEMENTS.
24. ALL RADII ARE TO BE 5' UNLESS OTHERWISE NOTED.

GRAPHIC LEGEND

- NEW BUILDING AND SITE WALLS
- 6" CONCRETE SIDEWALK/PAVEMENT
- 4" CONCRETE SIDEWALK/PAVEMENT
- HEAVY DUTY ASPHALT
- RE-LAID PERMEABLE PAVERS
- ASPHALT BLOCK PAVERS
- TACTILE WARNING PAVERS
- CONTROL JOINTS
- EJ — EXPANSION JOINT AS SHOWN
- FLUSH CURB
- CONCRETE CURB AND GUTTER
- LIMITS OF DISTURBANCE

CODED LAYOUT NOTES

KEY	DESCRIPTION	DETAIL
1	6" THICK CONCRETE PAVEMENT	B / C-301
2	4" THICK CONCRETE PAVEMENT	D / C-301
3	ASPHALT PAVEMENT	A / C-301
4	CONCRETE CURB AND 12" WIDE GUTTER	E / C-301
5	ADA TACTILE WARNING PAVERS	–
6	FLUSH CONCRETE CURB	H / C-301
7	ASPHALT BLOCK PAVERS OVER CONCRETE BASE	G / C-301
8	PERMEABLE PAVERS – REINSTALL SALVAGED PAVERS	F / C-301
9	SALVAGE AND REINSTALL ORNAMENTAL STEEL FENCE (8' HT.)	–
10	NEW PAIR OF 12' GATES (8' HT.) – ORNAMENTAL STEEL TO MATCH FENCE	–
11	SOD (ALL AREAS DISTURBED BY DEMOLITION AND CONSTRUCTION)	–
12	STORM STRUCTURE (SEE C2.0 FOR MORE INFORMATION)	–
13	BOLLARDS	I / C-301

The New Look For Digging Safely in Kentucky
Kentucky 811
Call 811 Before You Dig

THE CONTRACTOR SHALL ESTABLISH LOCATION OF ALL UNDERGROUND UTILITY LINES, TANKS, VAULTS, ETC. PRIOR TO CONSTRUCTION THROUGH B.U.D. OR BY A PRIVATE, 3RD PARTY UTILITY LOCATE COMPANY AND SHALL BE RESPONSIBLE FOR DAMAGES AS A RESULT.

JRA architects
3225 Summit Square Place, Suite 200
Lexington, Kentucky 40509
859.252.6781

NOT FOR CONSTRUCTION

RESERVED FOR AHJ STAMP

CARMAN
LANDSCAPE ARCHITECTURE
URBAN PLANNING
CIVIL ENGINEERING

RFP 2 DRAWINGS

UK INDOOR TRACKFACILITY
UNIVERSITY OF KENTUCKY
LEXINGTON, KENTUCKY

CIVIL

PROJECT	202258
DATE	08/31/2022

REVISIONS

No.	Description	Date

JRA ARCHITECTS HAS RETAINED AN ELECTRONIC VERSION OF THESE DRAWINGS. THE CLIENT AGREES NOT TO REUSE THESE DRAWINGS - IN ELECTRONIC OR ANY OTHER FORMAT - IN WHOLE, OR IN PART, FOR ANY PURPOSE OTHER THAN THE PROJECT. THE CLIENT AGREES NOT TO TRANSFER THESE ELECTRONIC FILES TO OTHERS WITHOUT THE PRIOR WRITTEN CONSENT OF THE ARCHITECT. THE CLIENT FURTHER AGREES TO WAIVE ALL CLAIMS AGAINST THE ARCHITECT RESULTING IN ANY WAY FROM ANY UNAUTHORIZED CHANGES TO OR REUSE OF THE ELECTRONIC FILES FOR ANY OTHER PROJECT BY ANYONE OTHER THAN THE ARCHITECT.

SITE LAYOUT PLAN

C-101

COPYRIGHT 2022 - JRA, INC.

File Path

2/9/2026 9:25:45 AM

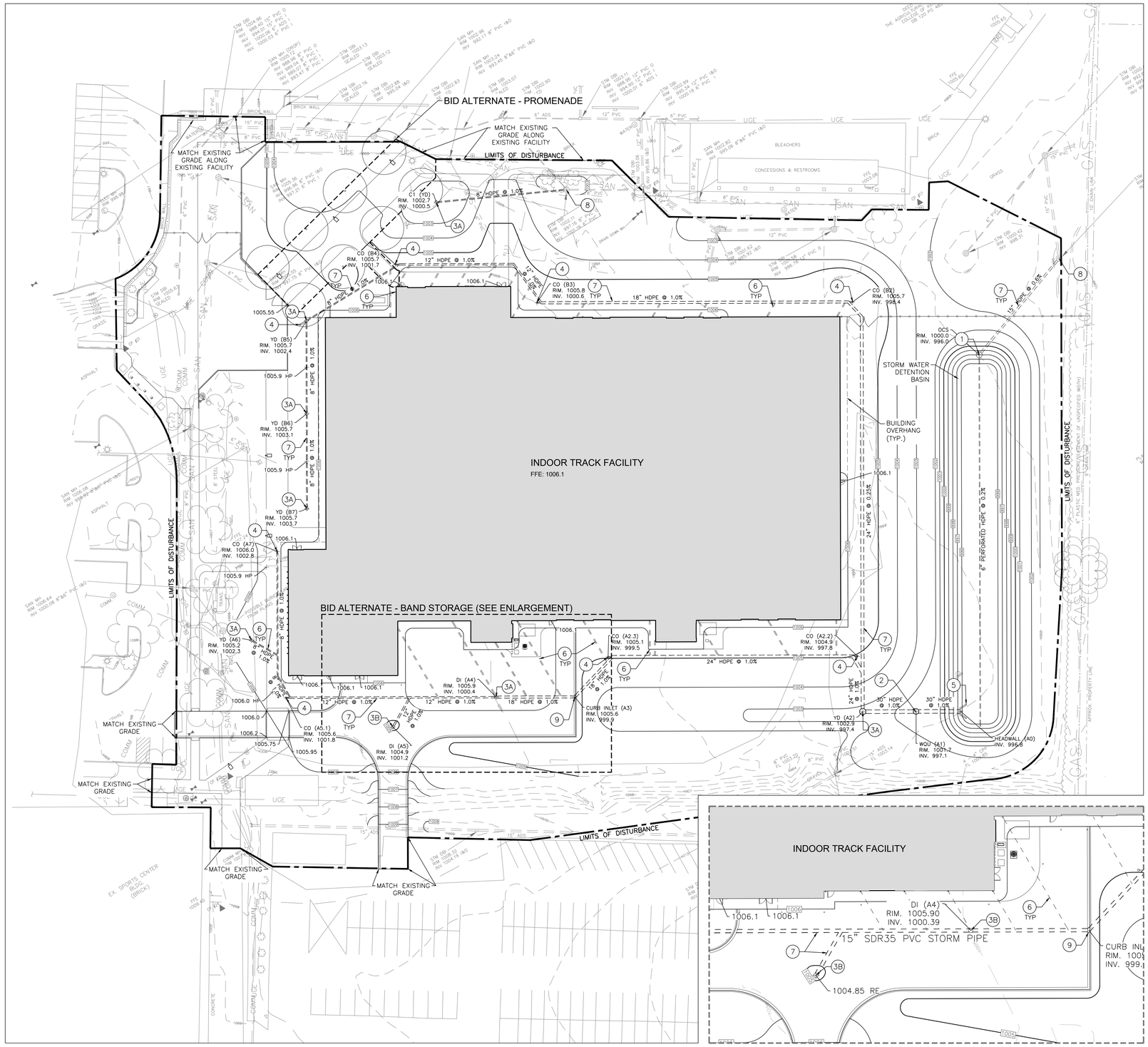

GRADING AND DRAINAGE PLAN

SCALE: 1" = 30'

ENLARGEMENT: BID ALTERNATE - BAND STORAGE

SCALE: 1" = 20'

GENERAL GRADING AND DRAINAGE NOTES:

1. ALL SPOT ELEVATIONS INDICATE FINISH GRADE OF SURFACE. ADJUSTMENTS MUST BE MADE TO ESTABLISH GRADES OF SUB-BASE OR SUBGRADE. SPOT ELEVATIONS ARE INCLUSIVE OF ANY LANDSCAPE MULCH REQUIRED.
2. PRIOR TO CONSTRUCTION OR DEMOLITION, CONTRACTOR SHALL BE RESPONSIBLE FOR VERIFYING LOCATION OF ALL EXISTING UTILITIES, SO THAT NEW CONSTRUCTION WILL NOT DAMAGE OR INTERFERE WITH EXISTING UTILITY LINES. SHOULD DAMAGE OCCUR, IT IS THE CONTRACTOR'S SOLE RESPONSIBILITY TO REPAIR AND/OR REPLACE SAID DAMAGE AT THE CONTRACTOR'S EXPENSE. FINISHED REPAIRS OR REPLACEMENT SHALL MEET THE APPROVAL OF THE OWNER.
3. ALL EXCESS EXCAVATED MATERIAL, OTHER THAN TOPSOIL, IS TO BE REMOVED FROM THE SITE AT CONTRACTOR'S COST
4. UNLESS OTHERWISE NOTED, ALL TREES AND VEGETATION SHALL BE PROTECTED DURING CONSTRUCTION. ALL VEGETATION, ROOTS, TREES, ETC. TO BE REMOVED SHALL BE REMOVED TO A MINIMUM DEPTH OF THREE FEET BELOW FINISHED GRADE. CONTRACTOR SHALL TAKE ALL NECESSARY PRECAUTIONS NOT TO DAMAGE FOLIAGE, BRANCHES OR ROOTS OF EXISTING TREES TO REMAIN. BURNING IS NOT ALLOWED ON SITE UNLESS APPROVED BY OWNER AND LOCAL FIRE DEPARTMENT
5. BEFORE STARTING SITE EXCAVATION, CONTRACTOR SHALL STRIP ALL TOPSOIL FROM PORTIONS OF THE SITE TO BE DEVELOPED AND STORE IN A LOCATION THAT WILL NOT INTERFERE WITH SITE DEVELOPMENT OPERATIONS. CONTRACTOR SHALL BE RESPONSIBLE FOR REDISTRIBUTING TOPSOIL IN ALL FINISHED GRADE AREAS, BACK-FILLING CURBS, SIDEWALKS, ETC. TOPSOIL SHALL NOT BE DISTRIBUTED WHEN WET OR OVERLY COMPACTED.
6. CONTRACTOR SHALL PROVIDE LANDSCAPE ARCHITECT/CIVIL ENGINEER WITH COMPACTION TESTING FROM AN INDEPENDENT TESTING AGENCY. COMPACTED FILLS GREATER THAN 12" INSIDE THE BUILDING FOOTPRINT SHALL BE TESTED BY THE SPECIAL INSPECTOR. ALL OTHER COMPACTED FILLS SHALL BE TESTED BY AN INDEPENDENT TESTING AGENCY AND PAID FOR BY THE CONTRACTOR.
7. SHOULD CONTRACTOR ENCOUNTER ROCK EXCAVATION, THE ROCK SHALL BE REMOVED TO A MINIMUM DEPTH OF SIX INCHES BELOW BOTTOM OF UTILITIES OR SUBGRADE OF ROAD BEDS AND FIFTEEN INCHES BELOW TURF AREAS UNLESS OTHERWISE SPECIFIED IN CONTRACT DOCUMENTS INCLUDING THE GEOTECHNICAL REPORT
8. CONTRACTOR SHALL TAKE PRECAUTIONS NOT TO PLACE EXCAVATED MATERIALS IN A FLOOD PLAIN, JURISDICTIONAL OR SPECIAL USE WATERS OR DESIGNATED/CONSTRUCTED WETLANDS
9. ELEVATIONS AND CONTOURS ON THIS PLAN ARE REFERENCED TO MEAN SEA LEVEL DATUM AND BENCHMARKS REFERENCED ON THE PLAN
10. IT SHALL BE SOLELY THE CONTRACTOR'S RESPONSIBILITY TO VERIFY IF ROCK EXCAVATION FOR MASS GRADING OR TRENCHING IS REQUIRED. ALL EXCAVATION IS UNCLASSIFIED. THERE WILL BE NO PAYMENT FOR ROCK EXCAVATION.
11. IT IS THE CONTRACTOR'S RESPONSIBILITY TO DETERMINE EXCAVATION QUANTITIES.
12. IT IS THE DESIGN INTENT FOR ALL WATER TO BE DIRECTED AWAY FROM THE PROPOSED AND EXISTING BUILDINGS.
13. CONTRACTOR IS RESPONSIBLE FOR COMPLYING WITH THE REQUIREMENTS OF THE AMERICANS WITH DISABILITIES ACT AND/OR PUBLIC RIGHT OF WAY ACCESSIBILITY GUIDELINES INCLUDING MAXIMUM 2% CROSS SLOPE FOR ACCESSIBLE PEDESTRIAN ROUTES AND 2% SLOPES IN ANY DIRECTION FOR LANDINGS AT STAIRS AND RAMPS. THE CONTRACTOR SHALL VERIFY THESE COMPLIANT SLOPES IMMEDIATELY AFTER FORMING OF OR SETTING OF GRADE STAKES AND IF SPECIFIED GRADES ARE NOT COMPLIANT, THE CONTRACTOR SHALL CONTACT THE LANDSCAPE ARCHITECT/CIVIL ENGINEER IMMEDIATELY FOR A RESOLUTION
14. REFER TO THE SITE SURVEY FOR EXISTING SPOT ELEVATIONS. SURVEY INFORMATION PROVIDED BY: ENDRIS ENGINEERING 859-253-1425
15. ROOF LEADER CONNECTIONS TO MAIN LINE SHALL BE 6" DIAMETER PIPE WITH 12" MINIMUM COVER UNLESS OTHERWISE NOTED. ROOF LEADERS SHALL HAVE A MINIMUM OF 1% POSITIVE GRADIENT TO THE POINT OF CONNECTION OR DISCHARGE.
16. BORROWED FILL MATERIALS ARE TO BE APPROVED BY THE OWNER, LANDSCAPE ARCHITECT, CIVIL ENGINEER AND/OR THE GEOTECHNICAL ENGINEER PRIOR TO TRANSPORT OR USE ON THIS SITE.
17. EXISTING STORM SEWER RIMS AND INVERTS ARE TAKEN FROM THE SITE SURVEY AND SHOULD BE CROSS-REFERENCED WITH THE SITE SURVEY. REFER TO SITE SURVEY FOR ALL EXISTING ON-SITE STORM SEWER INFORMATION.
18. CONTRACTOR IS RESPONSIBLE FOR DESIGN OF SHORING AND UNDERPINNING OF UTILITIES OR STRUCTURES AT LOCATIONS INDICATED. CONTRACTOR SHALL PROVIDE SUBMITTAL DRAWINGS PREPARED AND SEALED BY A PROFESSIONAL ENGINEER REGISTERED IN THE COMMONWEALTH OF KENTUCKY AS REQUIRED BY THE OCCUPATIONAL SAFETY HEALTH ADMINISTRATION. THE NEED FOR, MEANS AND METHODS FOR SHORING ARE THE RESPONSIBILITY OF THE CONTRACTOR
19. ALL PAVED AREAS INCLUDING SIDEWALKS, PARKING AREAS, SERVICE AREAS, ETC. ARE SPECIFIED WITH MATERIALS FOR THE INTENDED FINAL USE OF EACH AREA. THE AREAS ARE NOT SPECIFIED TO BE USED FOR TEMPORARY CONSTRUCTION TRAFFIC. SHOULD THE CONTRACTOR INSTALL OR CONSTRUCT THE PAVED AREA AS SPECIFIED AND THEN UTILIZE FOR TEMPORARY CONSTRUCTION ACTIVITY, THE CONTRACTOR AT NO COST TO THE OWNER SHALL REPAIR AND/OR RECONSTRUCT THE AREAS WITH REGARDS TO MEETING MATERIAL SPECIFICATIONS, SUBSEQUENT STABILIZATION AND GRADING PRIOR TO CONSTRUCTION OF FINAL PAVEMENT SURFACES.
20. THE CONTRACTOR SHALL NOTE THAT TEMPORARY CONSTRUCTION ACTIVITY MAY DE-STABILIZE SUBGRADES FOR BUILDING OR PAVED AREAS. THE CONTRACTOR SHALL BE RESPONSIBLE FOR THE MEANS AND METHODS COST FOR THE TEMPORARY USE OF AREAS FOR CONSTRUCTION ACTIVITY AND SHALL ALSO BE RESPONSIBLE FOR RE-STABILIZING AREAS SHOULD TEMPORARY CONSTRUCTION ACTIVITY CONTRIBUTE TO THE NEED TO STABILIZE BUILDING OR PAVEMENT AREAS.
21. ELEVATIONS OF ALL RIMS, STRUCTURE COVERS, ACCESS DOORS AND TOPS OF ALL UTILITY VAULTS, MANHOLES, VENTS, VALVE BOXES, ETC. SHALL BE ADJUSTED TO MEET PROPOSED SURROUNDING GRADES.
22. BEFORE STARTING SITE EXCAVATION, CONTRACTOR SHALL BE FAMILIAR WITH THE REPORT OF GEOTECHNICAL EXPLORATION AND COMPLY WITH RECOMMENDATION PROVIDED FOR SUBGRADE CONDITIONS.
23. TOPSOIL SHALL BE MINIMUM SIX (6) INCHES DEEP IN ALL TURF AREAS AND TWELVE (12) INCHES DEEP IN ALL LANDSCAPE BED AREAS AFTER PLACEMENT AND REASONABLE SETTLEMENT.
24. CONTRACTOR SHALL BE RESPONSIBLE FOR THE FINISH GRADING OF TOPSOIL AND SHALL ENSURE THAT FINISH GRADING DOES NOT CONTAIN DEPRESSIONS OR HIGH AREAS THAT ARE NOT CONSISTENT WITH PROPOSED SURFACE GRADES. THE CONTRACTOR SHALL RECEIVE APPROVAL OF FINISH SURFACE GRADING FROM THE OWNER, LANDSCAPE ARCHITECT OR CIVIL ENGINEER PRIOR TO INSTALLATION OF TURF OR LANDSCAPE MATERIALS. THE CONTRACTOR SHALL BE RESPONSIBLE FOR MITIGATING ANY IRREGULARITIES PRIOR TO PLACEMENT OF TURF OR LANDSCAPE MATERIALS.
25. CONTRACTOR SHALL NOT CREATE ANY SITE GRADING THAT WILL PREVENT THE NORMAL DRAINAGE OF WATER OF DAM WATER ON ANY ADJACENT PROPERTIES. SHOULD OFFSITE TOPOGRAPHY OR CONTOURS SHOWN ON GRADING PLAN NOT DEPICT ACCURATE CONDITIONS THAT CREATE DRAINAGE PROBLEMS, THE CONTRACTOR SHALL BRING THIS TO THE ATTENTION OF THE OWNER, LANDSCAPE ARCHITECT AND/OR CIVIL ENGINEER, PRIOR TO BEGINNING WORK.
26. THE CONTRACTOR SHALL BE RESPONSIBLE FOR ALL UNDERCUT OF UNUSABLE, UNSTABLE OR OTHERWISE UNACCEPTABLE MATERIALS THAT ARE INDICATED ON THIS PLAN, ASSOCIATED SPECIFICATIONS AND/OR REFERENCED IN THE GEOTECHNICAL REPORT. THE CONTRACTOR SHALL PAY FOR ALL UNDERCUT EXCAVATION AND DISPOSITION OF MATERIALS IN AN ACCEPTABLE MANNER THAT MAY INCLUDE HAULING OFFSITE, DISTRIBUTING ON THE SITE IN AREAS THAT ARE NOT DESIGNATED FOR STRUCTURAL FILL FOR BUILDINGS OR PAVEMENTS. ANY DISTRIBUTION OF MATERIALS ON-SITE SHALL BE PLACED TO CREATE POSITIVE DRAINAGE AND WASTED MATERIALS SHALL BE SEEDED AND MULCHED, AT A MINIMUM, UNLESS OTHERWISE SPECIFIED.
27. DETENTION BASIN SHALL BE OBSERVED BY LANDSCAPE ARCHITECT/CIVIL ENGINEER UPON COMPLETION OF EXCAVATION TO OBTAIN REQUIRED VOLUME AND THE CONTRACTOR SHALL PROVIDE VOLUME COMPUTATIONS FROM LICENSED SURVEYOR TO VERIFY COMPLIANCE.
28. REFER TO ARCHITECTURAL PLANS FOR ALL DOWNSPOUT SIZES, LOCATION, AND QUANTITIES. COORDINATE THIS PLAN WITH ARCHITECTURAL TO ENSURE ALL TIE-IN LOCATIONS ARE COORDINATED.
29. CONTRACTOR SHALL ENSURE ALL PROPOSED IMPROVEMENTS MEET AND MATCH EXISTING AND/OR ADJACENT CONDITIONS. CONTRACTOR SHALL NOTIFY DESIGN ENGINEER UPON ANY DISCREPANCY WHICH WILL DETER ADHERENCE TO THIS CONDITION.
30. ALL STORM SEWER INFRASTRUCTURE NEEDS TO BE FLUSHED FREE OF SEDIMENT AND INSPECTED BY ENGINEER AT COMPLETION OF PROJECT.
31. SPOT ELEVATIONS LABELED WITH "EX" ARE EXISTING SPOTS THAT HAVE BEEN INTERPOLATED FROM THE SITE SURVEY AND NEED TO BE VERIFIED IN THE FIELD. NOTIFY THE LANDSCAPE ARCHITECT OF ANY DISCREPANCIES.
32. CONTRACTOR TO FIELD VERIFY ALL LOCATIONS AND DEPTHS OF EXISTING STORM STRUCTURES PRIOR TO BEGINNING CONSTRUCTION TO INSURE ADEQUATE DEPTH.
33. CONTRACTOR TO LOCATE STOCKPILING OF SOILS WITHIN THE LIMITS OF WORK. ONCE A LOCATION IS SELECTED, THE LANDSCAPE ARCHITECT SHALL BE NOTIFIED TO VALIDATE THE LOCATION IS APPROPRIATE.
34. ALL DISTURBED GRADE AREAS TO BE SODDED AT COMPLETION OF PROJECT. REFER TO LANDSCAPE PLAN FOR MINIMUM LIMITS OF SOD.
35. IF ANY EXISTING ASBESTOS COATED SEWER LINE IS UNEARTHED, IT WILL REQUIRE ABATEMENT IN ACCORDANCE WITH CURRENT EPA GUIDELINES.
36. PROVIDE A MINIMUM OF 12" CRUSHED STONE BACKFILL OVER STORM PIPING. STORM PIPING UNDER PAVED SURFACES TO BE BACKFILLED FULL DEPTH WITH CRUSHED STONE.
37. THE CONTRACTOR SHALL BE RESPONSIBLE FOR ALL DEWATERING OF EXCAVATION AREAS FOR FOUNDATIONS AND/OR BASEMENTS AND SHALL NOT ALLOW PONDING OF WATER THAT WILL DESTABILIZE THE SOIL BEARING FOR FOUNDATIONS, SLABS, STRUCTURES, ETC.
38. CONTRACTOR SHALL UTILIZED DIGITAL FILES TO ESTABLISH COORDINATES FOR LOCATING DRAINAGE STRUCTURES. DIGITAL FILES CAN BE OBTAINED FROM CARMAN. SHOULD THE CONTRACTOR NEED A LISTING OF STRUCTURE COORDINATES, THESE MAY BE REQUESTED FROM THE OFFICE OF CARMAN.
39. THE CONTRACTOR SHALL NOTE THAT TERMITE PROTECTION AND TREATMENT IS REQUIRED BY THE ARCHITECTURAL SPECIFICATIONS AND THIS TREATMENT SHALL BE APPLIED BEFORE SLAB SYSTEM IS INSTALLED
40. THE CONTRACTOR SHALL SUBMIT SITE SPECIFIC SHOP DRAWINGS, SAMPLES, ETC FOR ANY MANUFACTURED OR PRE-CAST EQUIPMENT OR STRUCTURES ASSOCIATED WITH STORM DRAINAGE OR STORMWATER MANAGEMENT IMPROVEMENTS.
41. ANY SUMPS REMAINING IN STORM STRUCTURES (PVC OR CONCRETE) BELOW THE INVERT ELEVATION OF THE OUTLET PIPE SHALL BE FILLED WITH CONCRETE TO ELIMINATE ANY STANDING WATER WITHIN THE STRUCTURES.
42. ALL STORM PIPE SHALL BE SDR35 PVC, PER UNIVERSITY OF KENTUCKY STANDARDS.

SPECIAL NOTE:

1. EXISTING FILL AND FAT CLAY WITHIN 36" OF SUBGRADE BENEATH THE BUILDING SHALL BE REMOVED AND REPLACED WITH COMPACTED ACCEPTABLE FILL. ACCEPTABLE FILL SHALL BE DETERMINED ON SITE BY THE GEOTECHNICAL ENGINEER, BUT GENERALLY, LEAN CLAY OR D.G.A. IS ACCEPTABLE. EXISTING UNDOCUMENTED FILL OF LEAN CLAY MAY BE USED IF PROPERLY COMPACTED AND APPROVED BY THE GEOTECHNICAL ENGINEER.

CODED LAYOUT NOTES

KEY	DESCRIPTION	GRAPHIC	DETAIL
1	OUTLET CONTROL STRUCTURE	○	E / C-202
2	WATER QUALITY UNIT	○	F / C-202
3A	PVC YARD DRAIN BASIN	◦	A / C-202
3B	DRAIN INLET WITH TRAFFIC RATED GRATE	◦	G / C-202
4	DRAIN CLEANOUT	–	C / C-202
5	HEADWALL	(	D / C-202
6	8" SDR35 PVC STORM PIPE	— — — —	–
7	15" SDR35 PVC STORM PIPE	= = = =	–
8	CORE OPENING INTO EX. MANHOLE TO INSPERT NEW PIPE AND GROUT SOLID AROUND PIPE (FLUSH WITH INSIDE WALL OF MANHOLE)		–
9	CURB INLET	▯	B / C-202

GRAPHIC LEGEND

- NEW BUILDING AND SITE WALLS
- 1005.75 SPOT ELEVATION
- INTERMEDIATE CONTOUR LINE
- INDEX CONTOUR LINE

ABBREVIATION LEGEND

EX	EXISTING SPOT
TC	TOP OF CURB
BC	BOTTOM OF CURB
TS	TOP OF STEP
BS	BOTTOM OF STEP
GR	STORM GRATE ELEVATION
RE	RIM ELEVATION
TR	TOP OF RAMP
BR	BOTTOM OF RAMP
BD	BOTTOM OF DOCK
IE	INVERT ELEVATION
OIE	OUTLET INVERT ELEVATION (TRENCH)
HP	HIGH POINT

The New Look For Digging Safely in Kentucky
Kentucky 811
Call 811 Before You Dig

THE CONTRACTOR SHALL ESTABLISH LOCATION OF ALL UNDERGROUND UTILITY LINES, TANKS, VAULTS, ETC. PRIOR TO CONSTRUCTION THROUGH B.U.D. OR BY A PRIVATE, 3RD PARTY UTILITY LOCATE COMPANY AND SHALL BE RESPONSIBLE FOR DAMAGES AS A RESULT.

JRA architects
3225 Summit Square Place, Suite 200
Lexington, Kentucky 40509
859.252.6781

NOT FOR CONSTRUCTION

RESERVED FOR AHJ STAMP

CARMAN
LANDSCAPE ARCHITECTURE
URBAN PLANNING
CIVIL ENGINEERING

RFP 2 DRAWINGS

UK INDOOR TRACKFACILITY

UNIVERSITY OF KENTUCKY
LEXINGTON, KENTUCKY

CIVIL

PROJECT	202258
DATE	08/31/2022

REVISIONS

No.	Description	Date

JRA ARCHITECTS HAS RETAINED AN ELECTRONIC VERSION OF THESE DRAWINGS. THE CLIENT AGREES NOT TO REUSE THESE DRAWINGS - IN ELECTRONIC OR ANY OTHER FORMAT - IN WHOLE, OR IN PART, FOR ANY PURPOSE OTHER THAN FOR THIS PROJECT. THE CLIENT AGREES NOT TO TRANSFER THESE DRAWINGS TO ANY OTHERS WITHOUT THE WRITTEN CONSENT OF THE ARCHITECT. THE CLIENT FURTHER AGREES TO WAIVE ALL CLAIMS AGAINST THE ARCHITECT RESULTING IN ANY WAY FROM ANY UNAUTHORIZED CHANGES TO OR REUSE OF THE ELECTRONIC FILES FOR ANY OTHER PROJECT BY ANYONE OTHER THAN THE ARCHITECT.

GRADING AND DRAINAGE PLAN

C-201

COPYRIGHT 2022 - JRA, INC.

File Path

2/9/2026 9:55:45 AM

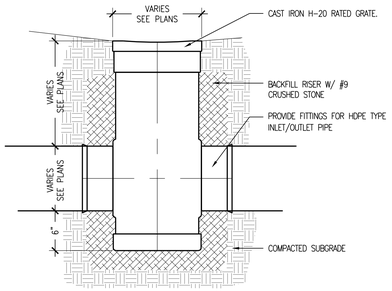

DRAIN BASINS TO BE NYLOPLAST AMERICA, INC. OR APPROVED EQUAL.
(800) 859-0328

A PVC YARD DRAIN BASIN

SCALE: 1" = 1'-0"

NOTES:

1. NO. 5 REINF. STL. SHALL BE USED THROUGHOUT ON 12" CENTERS
2. ALL REINF. STL. SHALL HAVE A MIN. 2" CLEARANCE TO CONC. FACE
3. NO REINF. STEEL IS REQ'D. IN THE BOTTOM SLAB
4. ALL VERTICAL REINF. STL. SHALL EXTEND 4" INTO BTM. SLAB
5. CURB INLET GRATE SHALL BE J.R. HOE 525
6. CURB INLET TO HAVE 12" OF CURB GUTTER POURED AROUND EACH SIDE OF THE INLET BESIDES THE 6" CURB

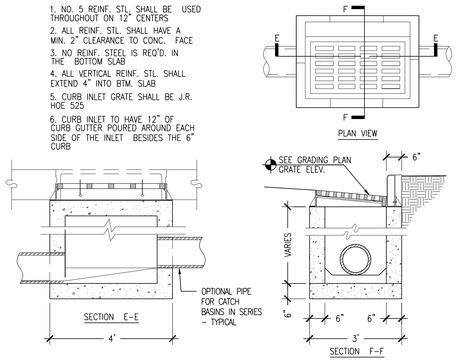

B CURB INLET

SCALE: 1/2" = 1'-0"

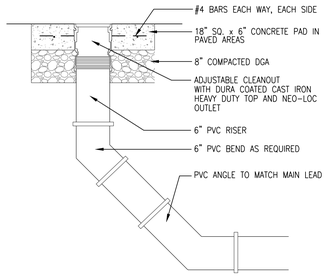

NOTE: CONCRETE PAD NOT REQUIRED IN GRASS OR MULCH AREAS.

C DRAIN CLEANOUT

SCALE: 1" = 1'-0"

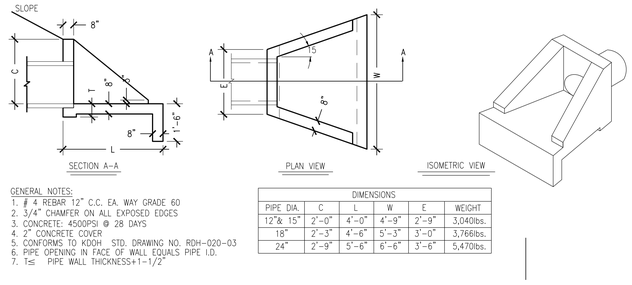

GENERAL NOTES:

1. # 4 REBAR 12" C.C. EA. WAY GRADE 60
2. 3/4" CHAMFER ON ALL EXPOSED EDGES
3. CONCRETE: 4500PSI @ 28 DAYS
4. 2" CONCRETE COVER
5. CONFORMS TO KDOH STD. DRAWING NO. RDH-020-03
6. PIPE OPENING IN FACE OF WALL EQUALS PIPE I.D.
7. T≤ PIPE WALL THICKNESS+1-1/2"

DIMENSIONS					
PIPE DIA.	C	L	W	E	WEIGHT
12"& 15"	2'-0"	4'-0"	4'-9"	2'-9"	3,040lbs.
18"	2'-3"	4'-6"	5'-3"	3'-0"	3,766lbs.
24"	2'-9"	5'-6"	6'-6"	3'-6"	5,470lbs.

D HEADWALL

SCALE: 3/4" = 1'-0"

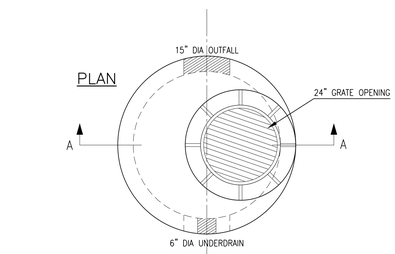

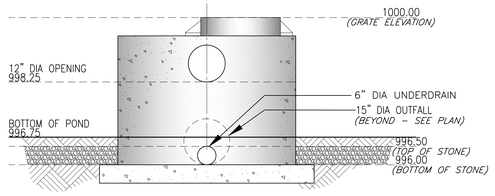

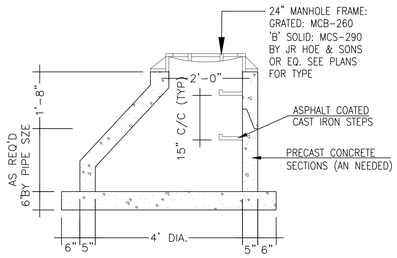

SECTION 'A'

NOTE:

1. CONCRETE: 4500 PSI @ 28 DAYS.
2. MANHOLE BARREL REINFORCED TO ASTM C-478. PIPE OPENINGS PRECAST AS REQUIRED.
3. DETAIL IS CONCEPTUAL IN NATURE AND INTENDED TO CONVEY DESIGN INTENT.
4. PROVIDE SHOP DRAWINGS FOR REVIEW PRIOR TO FABRICATION.

E OUTLET CONTROL STRUCTURE

SCALE: 1" = 20'-0"

PRODUCT SPECIFICATIONS

- THE STORMWATER TREATMENT UNIT SHALL BE AN INLINE UNIT CAPABLE OF CONVEYING 100% OF THE DESIGN PEAK FLOW. IF PEAK FLOW RATES EXCEED MAXIMUM HYDRAULIC RATE, THE UNIT SHALL BE INSTALLED OFFLINE.
- THE BARRACUDA UNIT SHALL BE DESIGNED TO REMOVE AT LEAST 80% OF THE SUSPENDED SOLIDS ON AN ANNUAL AGGREGATE REMOVAL BASIS. SAID REMOVAL SHALL BE BASED ON FULL-SCALE THIRD PARTY TESTING USING OK-110 MEDIA GRADATION OR EQUIVALENT AND 300 mg/L INFLUENT CONCENTRATION. SAID FULL SCALE TESTING SHALL HAVE INCLUDED SEDIMENT CAPTURE BASED ON ACTUAL TOTAL MASS COLLECTED BY THE STORMWATER TREATMENT UNIT.
  -OR -
  THE BARRACUDA UNIT SHALL BE DESIGNED TO REMOVE AT LEAST 50% OF TSS USING A MEDIA MIX WITH d/50=75 MICRON AND 200 MG/L INFLUENT CONCENTRATION.
  -OR -
  THE BARRACUDA UNIT SHALL BE DESIGNED TO REMOVE AT LEAST 50% OF TSS PER CURRENT NJDEP/NJCAT HDS PROTOCOL.

BARRACUDA S6	
UNIT ID	S6
PEAK FLOW RATE CFS	6.38
TREATMENT FLOW RATE CFS	3.4

* TREATMENT FLOW RATE PER NJDEP

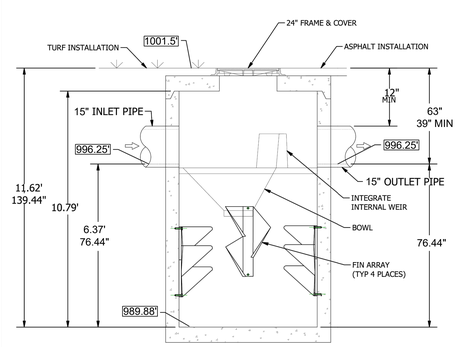

SECTION VIEW A-A

SCALE: N.T.S.

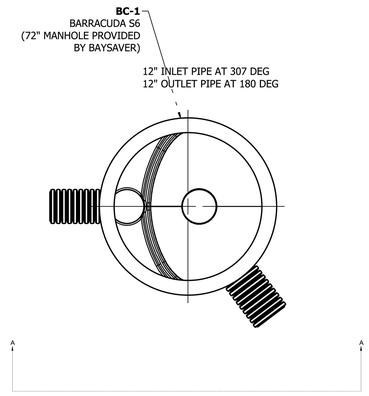

SITE SPECIFIC PLAN VIEW

SCALE 1:27

F WATER QUALITY UNIT

SCALE: 1" = 1'-0"

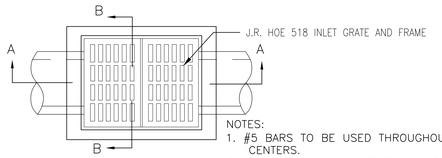

PLAN VIEW

NOTES:

1. #5 BARS TO BE USED THROUGHOUT ON 12" CENTERS.
2. ALL STELL SHALL HAVE 2" MIN. COVER TO ANY CONCRETE FACE.
3. ALL VERTICAL STEEL SHALL EXTEND 4" INTO BOTTOM SLAB.

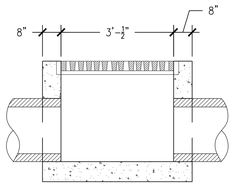

SECTION A–A

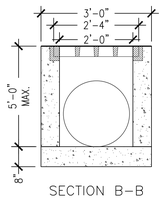

SECTION B–B

G DRAIN INLET WITH TRAFFIC RATED GRATE

SCALE: NTS

JRA architects
3225 Summit Square Place, Suite 200
Lexington, Kentucky 40509
859.252.6781

NOT FOR CONSTRUCTION

RESERVED FOR AHJ STAMP

CARMAN
LANDSCAPE ARCHITECTURE
URBAN PLANNING
CIVIL ENGINEERING

RFP 2 DRAWINGS

UK INDOOR TRACKFACILITY

UNIVERSITY OF KENTUCKY
LEXINGTON, KENTUCKY

LEXINGTON PUBLIC
LURBAN
LEXINGTON, KY

DATE:
DRAWN:
PROJECT #:
CHECKED:

1000 Deer Haven Drive
Mount Airy, MD 21771
1-800-BAYSAVER
(301) 829-2020

6460 TRUEMAN BLVD
HILLIARD, OH 43026

SCALE: AS NOTED

SHEET: 1 OF 1

CIVIL

PROJECT	202258
DATE	08/31/2022

REVISIONS

No.	Description	Date

JRA ARCHITECTS HAS RETAINED AN ELECTRONIC VERSION OF THESE DRAWINGS. THE CLIENT AGREES NOT TO REUSE THESE DRAWINGS - IN ELECTRONIC OR ANY OTHER FORMAT - IN WHOLE, OR IN PART, FOR ANY PURPOSE OTHER THAN FOR THE PROJECT. THE CLIENT AGREES NOT TO TRANSFER THESE ELECTRONIC FILES TO OTHERS WITHOUT THE PRIOR WRITTEN CONSENT OF THE ARCHITECT. THE CLIENT FURTHER AGREES TO WAIVE ALL CLAIMS AGAINST THE ARCHITECT RESULTING IN ANY WAY FROM ANY UNAUTHORIZED CHANGES TO OR REUSE OF THE ELECTRONIC FILES FOR ANY OTHER PROJECT BY ANYONE OTHER THAN THE ARCHITECT.

DRAINAGE DETAILS

C-202

COPYRIGHT 2022 - JRA, INC.

File Path

2/9/2008 9:55:45 AM

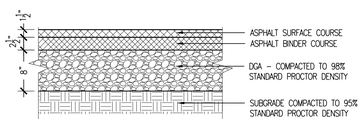

A ASPHALT PAVEMENT

SCALE: 1" = 1'-0"

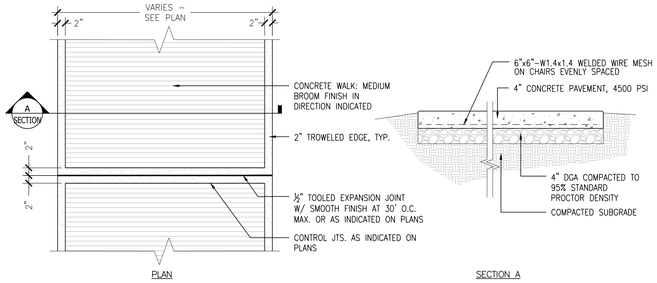

B 4" THICK CONCRETE PAVEMENT

SCALE: 3/4" = 1'-0"

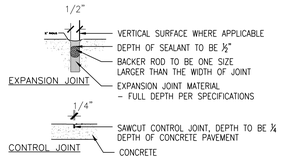

C CONCRETE JOINTS

SCALE: N.T.S.

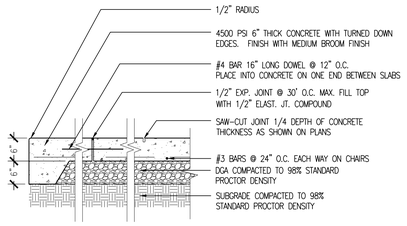

D 6" THICK CONCRETE PAVEMENT

SCALE: 3/4" = 1'-0"

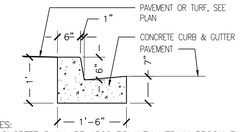

NOTES:
1. CONCRETE SHALL BE 4500 PSI WITH MEDIUM BROOM FINISH.
2. SAWED CONTROL JOINTS TO BE SPACED EVERY 20' WITH A MIN. DEPTH OF 3".
3. EXPANSION JOINTS SHALL BE CONSTRUCTED AT ALL BREAKS IN ALIGNMENT, AT CONTACT WITH NEW OR EXISTING CONCRETE, AT ALL DRAINAGE INLETS, AT THE BEGINNING AND ENDING POINTS OF CURVES, AND NOT TO EXCEED 100' MAXIMUM SPACING FOR SLIP FORM APPLICATION AND 50' MAXIMUM SPACING FOR HAND FORMED.
4. ALL CONCRETE SHALL BE CURED WITH WHITE PIGMENTED MEMBRANE FORMING COMPOUND (AASHTO M 148, TYPE 2).

E CONCRETE CURB AND GUTTER

SCALE: 3/4" = 1'-0"

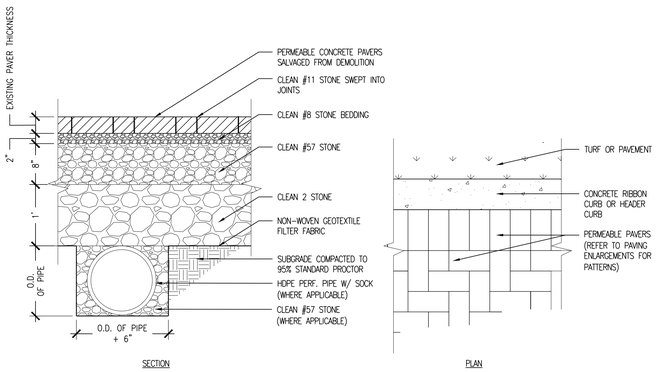

F PERMEABLE PAVERS

SCALE: 1" = 1'-0"

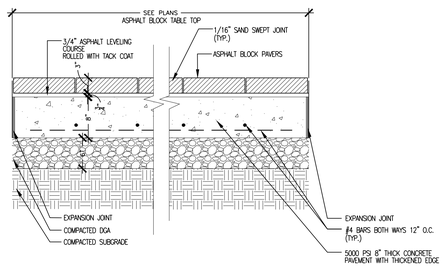

G ASPHALT BLOCK PAVERS ON CONCRETE SLAB

SCALE: 1" = 1'-0"

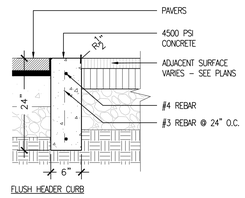

NOTES:
1. CONCRETE SHALL BE 4500 PSI WITH MEDIUM BROOM FINISH.
2. SAWN CONTROL JOINTS TO BE SPACED 30' MAX. JOINT DEPTH SHALL BE 1/4 DEPTH OF CURB.
3. 1/2" RADIUS: TYP. ALL EXPOSED EDGES

H FLUSH CURB AT PAVERS

SCALE: 1" = 1'-0"

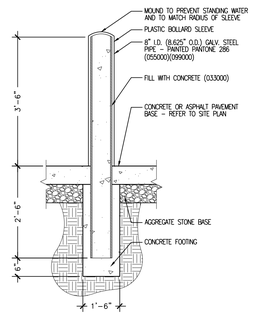

I CONCRETE FILLED STEEL PIPE BOLLARD

SCALE: N.T.S.

JRA architects
3225 Summit Square Place, Suite 200
Lexington, Kentucky 40509
859.252.6781

NOT FOR CONSTRUCTION

RESERVED FOR AHJ STAMP

CARMAN
LANDSCAPE ARCHITECTURE
URBAN PLANNING
CIVIL ENGINEERING

RFP 2 DRAWINGS

UK INDOOR TRACKFACILITY

UNIVERSITY OF KENTUCKY
LEXINGTON, KENTUCKY

CIVIL

PROJECT	202258
DATE	08/31/2022

REVISIONS

No.	Description	Date

JRA ARCHITECTS HAS RETAINED AN ELECTRONIC VERSION OF THESE DRAWINGS. THE CLIENT AGREES NOT TO REUSE THESE DRAWINGS - IN ELECTRONIC OR ANY OTHER FORMAT - IN WHOLE, OR IN PART, FOR ANY PURPOSE OTHER THAN FOR THE PROJECT. THE CLIENT AGREES NOT TO TRANSFER THESE ELECTRONIC FILES TO OTHERS WITHOUT THE PRIOR WRITTEN CONSENT OF THE ARCHITECT. THE CLIENT FURTHER AGREES TO WAIVE ALL CLAIMS AGAINST THE ARCHITECT RESULTING IN ANY WAY FROM ANY CHANGES OR ALTERATIONS TO, OR REUSE OF THE ELECTRONIC FILES FOR ANY OTHER PROJECT BY ANYONE OTHER THAN THE ARCHITECT.

SITE DETAILS

C-301

COPYRIGHT 2022 - JRA, INC.

File Path

2/9/2008 9:55:45 AM

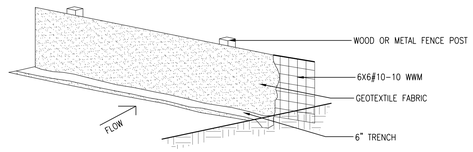

POSTS: HARDWOOD OR STEEL GREATER THAN 4' IN HEIGHT. FOR HARDWOOD, PROVIDE A MINIMUM 1-1/2" BY 1-1/2" CROSS SECTION. FOR STEEL, PROVIDE A 1-1/4" BY 1" T-SECTION WITH PROJECTIONS TO FASTEN WIRE AND FABRIC IN POSITION.
WOVEN OR WELDED WIRE FABRIC: PROVIDE FABRIC WITH A MINIMUM HEIGHT OF 2'-8". REQUIRE AT LEAST 6 HORIZONTAL WIRES SPACED 6-1/4 INCHES OR CLOSER WITH THE TOP AND BOTTOM WIRES 0.134 INCH OR LARGER AND ALL OTHER WIRES 0.1 INCH OR LARGER. REQUIRE 0.1 INCH OR LARGER VERTICAL WIRES SPACED 12" OR CLOSER.
GEOTEXTILE FABRIC: CONFORM TO AASHTO M288 FOR TEMPORARY SILT FENCE. PROVIDE FABRIC WITH A HEIGHT OF 3'. FABRIC TO BE AMOCO 2130 OR EQUAL.

NOTES:
1. THE BOTTOM 6" OF GEOTEXTILE SHALL BE BURIED IN A TRENCH CUT INTO THE GROUND ON UPSTREAM SIDE OF FENCE.
2. FENCE POST AND FABRIC WILL BE ACCEPTED BASED ON VISUAL INSPECTION BY THE LANDSCAPE ARCHITECT IN THE FIELD. GEOTEXTILE FABRIC WILL BE ACCEPTED UPON RECEIPT OF THE CERTIFICATION FROM THE MANUFACTURER THAT IT IS SUITABLE FOR USE AS SILT FENCE.
3. THE SILT FENCE SHALL BE CONSTRUCTED AT LOCATIONS SHOWN ON THE PLANS OR AS DIRECTED BY THE LANDSCAPE ARCHITECT. THE SILT FENCE SHALL BE ERECTED BEFORE GRADING IS BEGUN IN THE AREA TO BE PROTECTED. POSTS SHALL BE BE INSTALLED AT 6 TO 8 FEET SPACING (CLOSER SPACING SHOULD BE USED IN AREAS WHERE RAPID RUN-OFF IS TO BE EXPECTED) AND FENCE FABRIC ATTACHED. THE WIRE FABRIC AND GEOTEXTILE FABRIC SHALL BE ATTACHED TO THE POSTS ON THE UPHILL SIDE USING STAPLES, HOG-RINGS OR OTHER APPROVED METHOD.
4. DURING THE USEFUL LIFE OF THE SILT FENCE, IT SHALL BE MAINTAINED BY THE CONTRACTOR AND SILT ACCUMULATIONS THAT THREATEN DAMAGE TO THE FENCE SHALL BE REMOVED. AFTER THE USEFULNESS OF THE FENCE HAS ENDED, IT SHALL BE REMOVED AND DISPOSED OF AND THE ACCUMULATED SILT EITHER REMOVED OR DRESSED IN PLACE AS DIRECTED, AND THE ENTIRE AREA SEEDED AND PROTECTED.

(A) SILT FENCE

SCALE: 1/2" = 1'-0"

SPECIAL NOTE:
THIS CONSTRUCTION ENTRANCE DETAIL IS A MINIMUM. THE CONTRACTOR MAY ELECT TO INSTALL A STONE CONSTRUCTION ENTRANCE THE FULL LENGTH OF THE ACCESS DRIVE. ALL REMNANTS SHALL BE COMPLETELY REMOVE UPON COMPLETION OF THIS PROJECT.

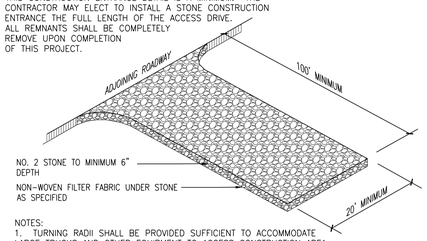

NOTES:
1. TURNING RADII SHALL BE PROVIDED SUFFICIENT TO ACCOMMODATE LARGE TRUCKS AND OTHER EQUIPMENT TO ACCESS CONSTRUCTION AREA.
2. STONE SHALL BE MAINTAINED IN A CONDITION WHICH WILL PREVENT TRACKING OR DIRECT FLOW OF MUD ONTO ROADWAY. PERIODIC TOP DRESSING WITH STONE WILL BE NECESSARY.
3. ANY MATERIAL WHICH STILL MAKES IT ONTO THE ROADWAY MUST BE CLEANED UP IMMEDIATELY.

(B) CONSTRUCTION ENTRANCE

SCALE: N.T.S.

NOTE:
RECONSTRUCT PIT AS NECESSARY WHEN FULL AND HAUL AWAY WASTE CONCRETE

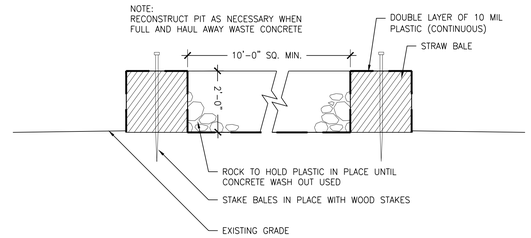

(C) WASHOUT PIT

SCALE: 1/2" = 1'-0"

JRA architects
3225 Summit Square Place, Suite 200
Lexington, Kentucky 40509
859.252.6781

NOT FOR CONSTRUCTION

RESERVED FOR AHJ STAMP

CARMAN
LANDSCAPE ARCHITECTURE
URBAN PLANNING
CIVIL ENGINEERING

RFP 2 DRAWINGS

UK INDOOR TRACKFACILITY
UNIVERSITY OF KENTUCKY
LEXINGTON, KENTUCKY

CIVIL

PROJECT	202258
DATE	08/31/2022

REVISIONS

No.	Description	Date

JRA ARCHITECTS HAS RETAINED AN ELECTRONIC VERSION OF THESE DRAWINGS. THE CLIENT AGREES NOT TO REUSE THESE DRAWINGS - IN ELECTRONIC OR ANY OTHER FORMAT - IN WHOLE, OR IN PART, FOR ANY PURPOSE OTHER THAN FOR THE PROJECT. THE CLIENT AGREES NOT TO TRANSFER THESE ELECTRONIC FILES TO OTHERS WITHOUT THE PRIOR WRITTEN CONSENT OF THE ARCHITECT. THE CLIENT FURTHER AGREES TO WAIVE ALL CLAIMS AGAINST THE ARCHITECT RESULTING IN ANY WAY FROM THE REUSE OF THE FILES AGREES TO OTHERS OR REUSE OF THE ELECTRONIC FILES FOR ANY OTHER PROJECT BY ANYONE OTHER THAN THE ARCHITECT.

EROSION CONTROL DETAILS

C-302

COPYRIGHT 2022 - JRA, INC.

File Path

2/9/2008 9:55:45 AM

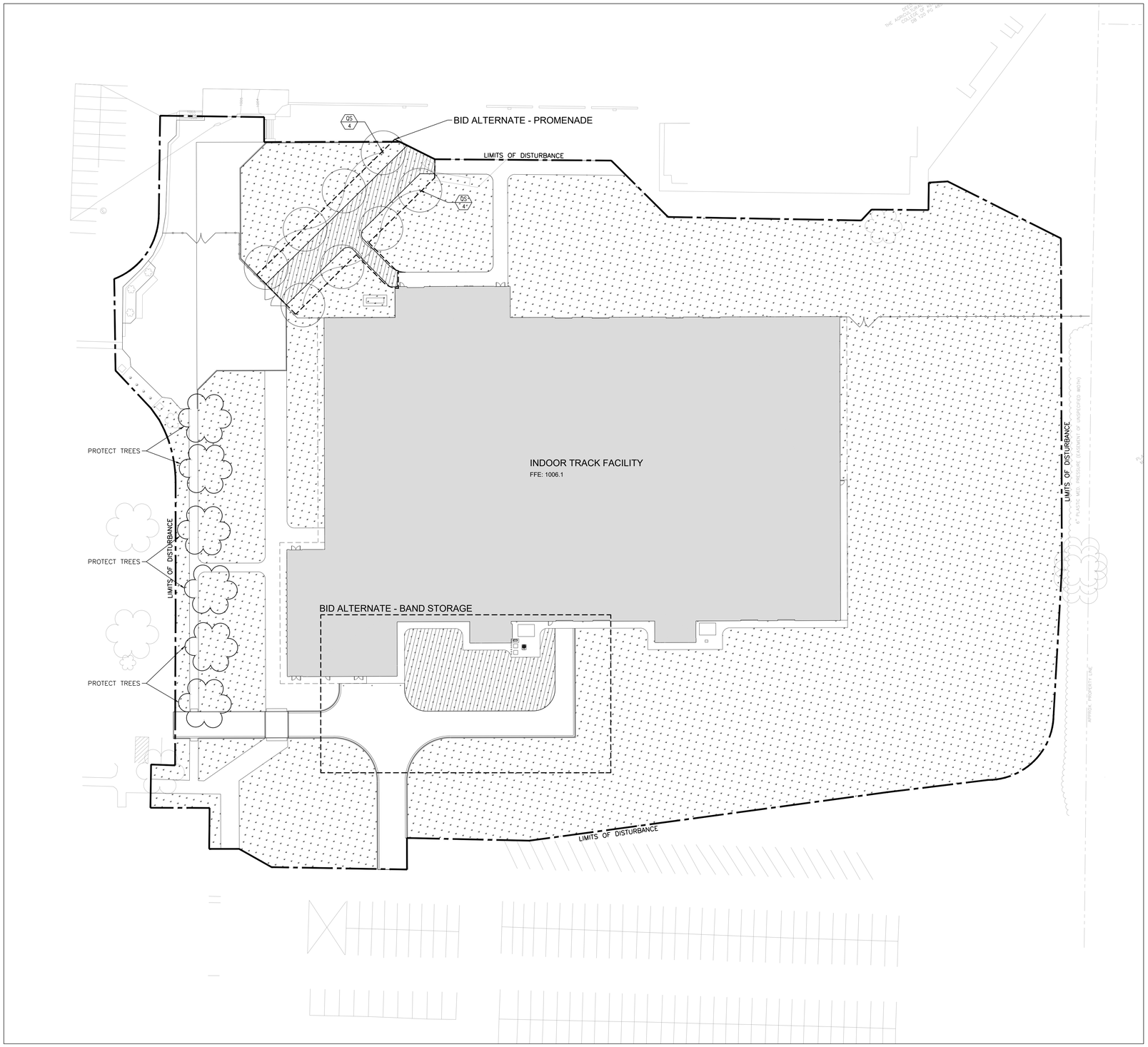

LAYOUT PLAN

SCALE: 1" = 30'

0 15 30 60

PLANTING SCHEDULE

	KEY	BOTANICAL NAME / COMMON NAME	SPECIFICATIONS / COMMENTS
TREES			
	QS	Quercus shumardii SHUMARD OAK	2.5" Cal., B&B, with 6' clear trunk specimen trees only

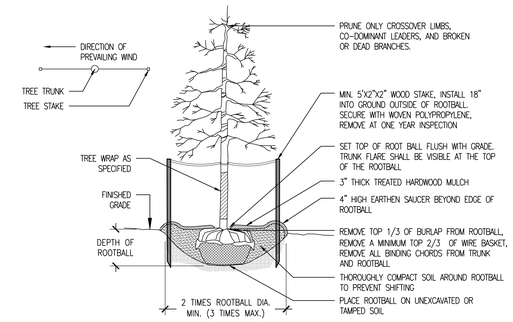

NOTE: ANY SERIES OF TREES PLACED IN A PARTICULAR ARRANGEMENT MAY BE FIELD CHECKED FOR ACCURACY. ANY TREES MISPLACED ARE SUBJECT TO REJECTION.

(H) TREE PLANTING

SCALE: 1" = 1'-0"

GRAPHIC LEGEND

- NEW BUILDING AND SITE WALLS
- SOD
- SOD – BASE BID

THE CONTRACTOR SHALL ESTABLISH LOCATION OF ALL UNDERGROUND UTILITY LINES, TANKS, VAULTS, ETC. PRIOR TO CONSTRUCTION THROUGH B.U.D. OR BY A PRIVATE, 3RD PARTY UTILITY LOCATE COMPANY AND SHALL BE RESPONSIBLE FOR DAMAGES AS A RESULT.

The New Look For Digging Safely in Kentucky
Kentucky 811
Call 811 Before You Dig

JRA architects
3225 Summit Square Place, Suite 200
Lexington, Kentucky 40509
859.252.6781

NOT FOR CONSTRUCTION

RESERVED FOR AHJ STAMP

CARMAN
LANDSCAPE ARCHITECTURE
URBAN PLANNING
CIVIL ENGINEERING

RFP 2 DRAWINGS

UK INDOOR TRACKFACILITY
UNIVERSITY OF KENTUCKY
LEXINGTON, KENTUCKY

CIVIL

PROJECT	202258
DATE	08/31/2022

REVISIONS

No.	Description	Date

JRA ARCHITECTS HAS RETAINED AN ELECTRONIC VERSION OF THESE DRAWINGS. THE CLIENT AGREES NOT TO REUSE THESE DRAWINGS - IN ELECTRONIC OR ANY OTHER FORMAT - IN WHOLE, OR IN PART, FOR ANY PURPOSE OTHER THAN FOR THE PROJECT. THE CLIENT AGREES NOT TO TRANSFER THESE DRAWINGS TO OTHERS WITHOUT THE PRIOR WRITTEN CONSENT OF THE ARCHITECT. THE CLIENT FURTHER AGREES TO WAIVE ALL CLAIMS AGAINST THE ARCHITECT RESULTING IN ANY WAY FROM ANY UNAUTHORIZED CHANGES TO OR REUSE OF THE ELECTRONIC FILES FOR ANY OTHER PROJECT BY ANYONE OTHER THAN THE ARCHITECT.

LANDSCAPE PLAN

C-401

COPYRIGHT 2022 - JRA, INC.

File Path

2/9/2008 9:55:45 AM

C:_REVIT_Locals\22157 (UK INDOOR TRACK AND FIELD) STR - RVT21_anorberg28LBG.rvt

GENERAL NOTES

DESIGN LOADS

STRUCTURAL RISK CATEGORY .... CATEGORY III

FLOOR LIVE LOAD

- CORRIDORS ABOVE FIRST FLOOR .... 80 PSF
- MECHANICAL .... 300 PSF
- STORAGE .... 125 PSF
- OFFICES .... 60 PSF
- RESTROOMS .... 60 PSF
- INDOOR TRACK .... 150 PSF

ROOF LIVE LOAD .... 20 PSF MIN

ROOF SNOW LOAD (PER ASCE 7-10)

- GROUND SNOW LOAD .... P_g = 15 PSF
- IMPORTANCE FACTOR .... Is = 1.1
- SNOW EXPOSURE FACTOR .... Ce = 1.0
- THERMAL FACTOR
  - (BUILDING) .... Ct = 1.0
  - (CANOPIES) .... Ct = 1.2
- RAIN ON SNOW SURCHARGE .... Pr = 5 PSF
- FLAT-ROOF SNOW LOAD* (Pf = 0.7CeCtIsPg)
  - (BUILDING) .... Pf = 11.5 PSF
  - (CANOPIES) .... Pf = 13.9 PSF
- MINIMUM-ROOF SNOW LOAD (IsPg) .... Pm = 16.5 PSF
- *(INCREASE FOR DRIFTING PER ASCE 7-10, SECTIONS 7.7 & 7.8)

WIND LOAD (PER ASCE 7-10)

- ULTIMATE DESIGN WIND SPEED .... V_{ULT}= 120 MPH
- NOMINAL DESIGN WIND SPEED .... V_{ASD}= 93 MPH
- WIND EXPOSURE .... EXPOSURE C
- ENCLOSURE .... FULLY ENCLOSED
- INTERNAL PRESSURE COEFFICIENT .... GC_{pi} = ± 0.18
- END ZONE WIDTH .... a = 15.2 FT

COMPONENTS & CLADDING EXTERNAL PRESSURE ULTIMATE (LRFD) LOADS (PSF)

EFFECTIVE WIND AREA (SQ FT)	LOCATION PER ASCE 7-10: 1	2	3	4	5
≤10	15.9 -25.3	15.9 -44.1	15.9 -65.2	25.3 -27.4	25.3 -33.8
20	14.5 -24.6	14.5 -40.5	14.5 -60.9	24.2 -26.3	24.2 -31.5
50	12.7 -23.7	12.7 -35.9	12.7 -55.3	22.7 -24.8	22.7 -28.5
100	11.3 -23.0	11.3 -32.3	11.3 -51.1	21.6 -23.7	21.6 -26.3
500	↓	↓	↓	19.0 -21.1	19.0 -21.1

NOTES:

1. WIND LOADING PROVIDED ARE ULTIMATE (LRFD) LOADING. FOR ALLOWABLE STRESS DESIGN MULTIPLY LOADS PROVIDED BY 0.6.
2. LOADING PROVIDED IS FOR WORST CASE ROOF HEIGHT. DELEGATED DESIGNERS MAY RECALCULATE LOADS FOR SPECIFIC COMPONENT HEIGHTS USING PARAMETERS SPECIFIED.
3. PRESSURES SHOWN ARE APPLIED NORMAL TO THE SURFACE.
4. PLUS AND MINUS SIGNS SIGNIFY PRESSURES ACTING TOWARD AND AWAY FROM THE SURFACES, RESPECTIVELY.
5. FOR HIP ROOFS WITH $\theta \leq 25°$, ZONE 3 SHALL BE TREATED AS ZONE 2.
6. EACH COMPONENT MUST BE DESIGNED FOR MAXIMUM POSITIVE AND NEGATIVE FORCES.
7. FOR COMPONENTS HAVING EFFECTIVE AREAS IN BETWEEN TABULATED VALUES, DESIGN LOADS MAY BE INTERPOLATED. OTHERWISE DESIGN LOAD MUST BE TAKEN FROM THE NEXT LOWEST EFFECTIVE AREA.
8. INTERNAL PRESSURE FOR ENCLOSED BUILDING IS INCLUDED IN ABOVE VALUES.
9. THE NET C&C PRESSURE (INCLUDING INTERNAL PRESSURE) FOR ANY COMPONENT SHALL NOT BE TAKEN LESS THAN 16 PSF ACTING IN EITHER DIRECTION NORMAL TO THE SURFACE.
10. NOTATION:
    - *a:* 10 PERCENT OF LEAST HORIZONTAL DIMENSION OR 0.4h, WHICHEVER IS SMALLER, BUT NOT LESS THAN EITHER 4% OF LEAST HORIZONTAL DIMENSION OR 3 FT.
    - *h:* MEAN ROOF HEIGHT, IN FEET, EXCEPT THAT EAVE HEIGHT SHALL BE USED FOR ROOF ANGLES θ < 10%
    - θ: ANGLE OF PLANE OF ROOF FROM HORIZONTAL, IN DEGREES.

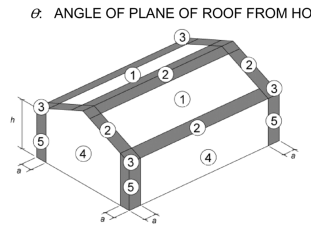

GABLE ROOF (7° < θ ≤ 45°)

EARTHQUAKE DESIGN DATA

- COUNTY / STATE .... FAYETTE / KENTUCKY
- IMPORTANCE FACTOR .... Ie = 1.25
- MAPPED SHORT PERIOD RESPONSE ACCELERATION .... Ss = 0.188
- MAPPED 1 SECOND PERIOD RESPONSE ACCELERATION .... S1 = 0.091
- SITE CLASS .... CLASS C
- DESIGN SHORT PERIOD SPECTRAL RESPONSE COEFFICIENT .... Sds = 0.150
- DESIGN 1 SECOND PERIOD SPECTRAL RESPONSE COEFFICIENT .... Sd1 = 0.103
- SEISMIC DESIGN CATEGORY .... CATEGORY C
- BASIC STRUCTURAL SYSTEM .... BUILDING FRAME SYSTEM
- SEISMIC RESISTING SYSTEM .... STEEL SYSTEMS NOT SPECIFICALLY DETAILED FOR SEISMIC RESISTANCE
- RESPONSE MODIFICATION FACTOR .... R = 3.0
- SEISMIC RESPONSE COEFFICIENT .... Cs = 0.0
- METHOD OF ANALYSIS .... EQUIVALENT LATERAL FORCE PROCEDURE
- SEISMIC BASE SHEAR .... = 0.0 KIPS

DESIGN STRESSES

CONCRETE (STRENGTH DESIGN) MINIMUM COMPRESSIVE STRENGTH IN 28 DAYS:

- FOOTINGS .... f'c = 3,000 PSI
- INTERIOR SLABS ON GRADE, DRILLED PIERS, GRADE BEAMS, WALLS, INTERIOR STRUCTURAL FRAME, AND CONCRETE ON METAL DECK .... f'c = 4,000 PSI
- CONCRETE EXPOSED TO FREEZE/THAW .... f'c = 5,000 PSI

REINFORCING BARS (ASTM A615 GRADE 60) .... fy = 60,000 PSI
WELDED WIRE FABRIC (ASTM A1064) .... fy = 65,000 PSI
WIDE FLANGE AND TEE SHAPES DESIGNATED AS W AND WT (ASTM A992) .... fy = 50,000 PSI
CHANNELS, ANGLES, PLATES AND BARS (ASTM A572) .... fy = 50,000 PSI
STEEL ROOF DECK (ASTM A653) .... fy = 33,000 PSI
HOLLOW STRUCTURAL SECTIONS - RECTANGULAR STEEL TUBES
(ASTM A500 GRADE C) .... fy = 50,000 PSI
STRUCTURAL STEEL PIPE (ASTM A53 GRADE B) .... fy = 35,000 PSI
STEEL JOISTS (K) AS PER SJI SPECIFICATIONS .... fy = 50,000 PSI MAX
fy = 36,000 PSI MIN
STRENGTH IN 28 DAYS .... f'm = 2,000 PSI
SOIL BEARING PRESSURE FOR FOUNDATIONS (MATERIAL) .... 2,000 PSF

DESIGN CRITERIA

1. STRUCTURE IS DESIGNED IN ACCORDANCE WITH THE 2018 KENTUCKY BUILDING CODE, 2nd EDITION (2015 IBC).
2. MAXIMUM ESTIMATED DEFLECTIONS (IN INCHES) ARE AS FOLLOWS:

	LIVE LOAD	DEAD + LIVE LOAD
ROOF MEMBERS	L/360	L/240
FLOOR MEMBERS INTERIOR	L/360	L/240

WHERE L = SPAN LENGTH BETWEEN CENTERLINE OF SUPPORTS (INCHES) FOR CANTILEVERS L = TWICE THE LENGTH OF THE CANTILEVER.

3. NO PROVISION HAS BEEN MADE FOR FUTURE HORIZONTAL OR VERTICAL EXPANSION.

GENERAL

1. THE REQUIREMENTS OF THESE GENERAL NOTES APPLY UNLESS OTHERWISE NOTED ON PLANS OR IN SPECIFICATIONS. LOBBIES AND CORRIDORS 100 PSF
2. THE CONTRACTOR SHALL BE RESPONSIBLE FOR OBTAINING ALL CONTRACT DOCUMENTS, ADDENDA, AND SUPPLEMENTARY INFORMATION AND DISTRIBUTING SUCH TO ALL SUBCONTRACTORS AND MATERIAL SUPPLIERS PRIOR TO THE PREPARATION AND SUBMITTAL OF SHOP DRAWINGS, FABRICATION, AND INSTALLATION OF ANY STRUCTURAL MEMBERS.
3. THE CONTRACTOR SHALL VERIFY ALL DIMENSIONS IN THE FIELD PRIOR TO COMMENCING WORK. THE ENGINEER SHALL BE NOTIFIED OF ANY DISCREPANCIES THAT MAY EXIST.
4. ANY DISCREPANCIES BETWEEN STRUCTURAL AND ARCHITECTURAL DRAWINGS SHALL BE BROUGHT TO THE ATTENTION OF THE ARCHITECT AND STRUCTURAL ENGINEER.
5. DO NOT SCALE DRAWINGS.
6. THE STRUCTURE IS DESIGNED TO FUNCTION AS A UNIT UPON COMPLETION AND IS THEREFORE DEPENDENT UPON DIAPHRAGM ACTION OF THE ROOF DECK AND FLOOR SLAB AND ATTACHMENT TO THE SHEAR WALLS AND FRAMES FOR STABILITY AND FOR RESISTANCE TO WIND AND SEISMIC FORCES. THE CONTRACTOR SHALL FURNISH AND INSTALL ALL NECESSARY BRACING REQUIRED TO PROPERLY CONSTRUCT THE BUILDING UNTIL THESE ELEMENTS ARE COMPLETE AND CAPABLE OF PROVIDING THIS SUPPORT.
7. THE CONTRACTOR SHALL BE SOLELY RESPONSIBLE FOR MEANS AND METHODS TO CONSTRUCT THE STRUCTURE, INCLUDING VERIFICATION OF LOAD CAPACITY OF THE STRUCTURE, NEW OR EXISTING, TO SUPPORT CONSTRUCTION ACTIVITIES, EQUIPMENT, ETC. AND FOR LIMITING THE AMOUNT OF CONSTRUCTION LOAD IMPOSED ON THE STRUCTURAL FRAMING. CONSTRUCTION LOADS SHALL NOT EXCEED THE DESIGN CAPACITY OF THE FRAMING AT THE TIME THE LOADS ARE IMPOSED. DAMAGE TO THE STRUCTURE CAUSED BY CONSTRUCTION ACTIVITIES SHALL BE CORRECTED BY THE RESPONSIBLE CONTRACTOR AT NO ADDITIONAL COST TO THE OWNER.
8. SHOP DRAWINGS MUST BE CHECKED AND STAMPED BY THE CONTRACTOR PRIOR TO SUBMISSION.
9. NON-STRUCTURAL ELEMENTS OF THE BUILDING (ARCHITECTURAL FINISHES, MASONRY VENEER AND ASSOCIATED TIES, INSULATION, SHEATHING, DUCTWORK, PIPING, FOUNDATION/FLOOR/ROOF DRAINS, ETC.) ARE TYPICALLY NOT SHOWN ON THE STRUCTURAL DRAWINGS. WHERE NON-STRUCTURAL ELEMENTS ARE SHOWN ON THE STRUCTURAL DRAWINGS, THEY ARE SHOWN FOR REFERENCE AND DESIGN INTENT ONLY. NON-STRUCTURAL ELEMENTS SHALL BE CONSTRUCTED AS SHOWN ON THE ARCHITECTURAL, ELECTRICAL, MECHANICAL AND PLUMBING DRAWINGS.
10. ELEVATIONS SHOWN ON STRUCTURAL DRAWINGS ARE IDEALIZED ELEVATIONS BASED ON DECK THICKNESS AND SLOPES SHOWN ON DRAWINGS AND DO NOT ACCOUNT FOR BEAM OR JOIST CAMBER. IT IS THE RESPONSIBILITY OF THE CONTRACTORS TO COORDINATE ANY CAMBER OF THEIR WORK WITH OTHER TRADES AND ADJUST ELEVATIONS AS NECESSARY TO ACCOUNT FOR DEAD LOAD DEFLECTION AND THIS CAMBER.
11. WALL OPENINGS AND TERMINATIONS SHOWN ON THE STRUCTURAL DRAWINGS ARE DIAGRAMMATIC ONLY. WALL TERMINATIONS AND OPENING JAMBS, HEADS, AND SILLS SHALL BE CONSTRUCTED AS SHOWN ON THE ARCHITECTURAL DRAWINGS. WHERE VENEERS WRAP JAMBS, DETAIL AND FABRICATE LINTELS TO BEAR ON SOLID STRUCTURE. DO NOT BEAR LINTELS OR BEAMS ON VENEERS (BRICKS, SIDING, ETC.). IF THE ARCHITECTURAL DRAWINGS DO NOT INCLUDE DETAILS FOR ANY OF THESE CONDITIONS, CONSULT WITH ARCHITECT FOR DIRECTION.
12. DETAILS LABELED TYPICAL ON THESE DRAWINGS SHALL APPLY TO ALL SITUATIONS OCCURRING ON THE PROJECT THAT ARE THE SAME OR SIMILAR AND SHALL APPLY REGARDLESS OF WHETHER THEY ARE KEYED ON THE PLANS. CONSTRUCTION NOT SPECIFICALLY INDICATED BY DETAIL OR SECTION SHALL BE SIMILAR TO DETAILS SHOWN FOR SIMILAR CONDITIONS.

FOUNDATION CONSTRUCTION

1. FOUNDATIONS ON THIS PROJECT ARE DESIGNED IN ACCORDANCE WITH RECOMMENDATIONS MADE BY ___________________________, GEOTECHNICAL ENGINEERS, IN THEIR REPORT DATED _______________________. THE GEOTECHNICAL REPORT IS PROVIDED AS REFERENCE INFORMATION AVAILABLE TO BIDDERS, BUT IS NOT PART OF THE CONTRACT DOCUMENTS. THE STRUCTURAL ENGINEER IS NOT RESPONSIBLE OR LIABLE FOR THE ACCURACY OF THE INFORMATION PRESENTED IN THE GEOTECHNICAL REPORT.
2. ELEVATIONS GIVEN ARE TO THE TOP OF FOOTINGS AND GRADE BEAMS.
3. ALL FOOTINGS MUST BE SUPPORTED ON UNDISTURBED SOIL CAPABLE OF SUPPORTING DESIGN LOADS WITHOUT APPRECIABLE SETTLEMENT. CONTRACTOR SHALL PROBE BEARING STRATA WITH DRIVEN RODS, REMOVE SHALLOW BEDROCK (AND OVERLYING SOIL) WITHIN ONE FOOTING WIDTH BELOW BOTTOM OF FOOTING, AND REPLACE WITH ENGINEERED SOIL BACKFILL.
4. IN GRANULAR SOILS (SANDS AND GRAVEL) THE SOIL SHALL BE MECHANICALLY TAMPED TO A HARD SURFACE IMMEDIATELY PRIOR TO PLACING FOOTING.
5. LOCATE EXISTING UNDERGROUND UTILITIES IN AREAS OF CONSTRUCTION. COORDINATE WITH UTILITY COMPANIES FOR ANY SHUT-OFF REQUIREMENTS OF STILL-ACTIVE LINES.
6. WHEN EXCAVATIONS APPROACH THE GROUND WATER LEVEL, THE WATER LEVEL SHALL BE LOWERED BY AN ACCEPTABLE DEWATERING SYSTEM SO THAT THE WATER LEVEL IS MAINTAINED CONTINUOUSLY A MINIMUM OF 2'-0" BELOW THE EXCAVATION.
7. PROVIDE MINIMUM (2) #5 CONTINUOUS IN ALL FOOTINGS DIRECTLY UNDER MASONRY WALLS.
8. BEFORE BACKFILL, ALL WALLS MUST BE ADEQUATELY BRACED. FOR BACKFILL REQUIREMENTS, SEE SPECIFICATIONS AND/OR GEOTECHNICAL ENGINEER'S REPORT.
9. RETAINING WALLS SHALL NOT BE BACKFILLED UNTIL COMPRESSIVE STRENGTH TESTS DEMONSTRATE THAT THE CONCRETE HAS DEVELOPED 100% OF THE REQUIRED 28-DAY COMPRESSIVE STRENGTH FOR THE CLASS OF CONCRETE SPECIFIED. THE CONTRACTOR MAY ELECT TO PREPARE ADDITIONAL TEST CYLINDERS IN ORDER TO DEMONSTRATE THAT THE REQUIRED COMPRESSIVE STRENGTH PRIOR TO THE MANDATORY 28-DAY COMPRESSIVE STRENGTH TESTS. IN NO CASE SHALL WALLS BE BACKFILLED PRIOR TO SEVEN (7) DAYS FROM PLACEMENT.
10. FOR PLACEMENT AND COMPACTION OF FILL UNDER SLABS ON GRADE, SEE SPECIFICATIONS. IF NOT OTHERWISE NOTED, COMPACT ALL FILL TO 98% OF OPTIMUM LABORATORY DENSITY IN ACCORDANCE WITH ASTM D698 STANDARD PROCTOR METHOD. PLACE FILL IN 6" TO 8" LAYERS AND COMPACT WITH VIBRATORY TAMPING EQUIPMENT.
11. WHERE ELECTRICAL CONDUIT CONGREGATES BELOW ELECTRICAL ROOMS AND PANELS, CONTRACTOR SHALL HOLD DOWN SUBGRADE APPROPRIATELY FOR CONDUIT TO BE BELOW SLAB. COVER CONDUIT WITH FLOWABLE FILL (LEAN CONCRETE) TO BOTTOM OF SLAB ELEVATION.
12. BEARING INTO SHALE - ELEVATIONS GIVEN ARE APPROXIMATE AND SHALL BE ADJUSTED TO SUIT FIELD CONDITIONS.
13. SEE DRILLED PIER NOTES AND DETAILS FOR ADDITIONAL REQUIREMENTS.
14. SHALE CONTAINING PYRITES MUST BE PROTECTED AS INDICATED ON THE DRAWINGS OR IN THE PROJECT SPECIFICATIONS.
15. SEE ARCHITECTURAL AND SITE DRAWINGS FOR CONTOUR AND LAYOUT OF SITE WALKS AND BREEZEWAYS. SLOPE EXTERIOR CONCRETE 1/8"/ FT AWAY FROM BUILDING, UNLESS NOTED OTHERWISE.
16. HIGH PLASTICITY ("FAT") CLAYS WITH A PLASTICITY INDEX OF 30 OR MORE WHICH ARE PRESENT WITHIN 2 FEET OF FINAL SUBGRADE ELEVATION OR FOOTING BEARING ELEVATION SHALL BE UNDERCUT FOR THE ENTIRE BUILDING AREA TO A DISTANCE OF 5 FEET OUTSIDE THE BUILDING FOOTPRINT. PROOFROLL AT UNDERCUT ELEVATION AND FURTHER UNDERCUT SOFT AND YIELDING MATERIALS TO FIRM MATERIAL AT THE DIRECTION OF THE SPECIAL INSPECTOR. BACKFILL UNDERCUT WITH ON-SITE LEAN CLAY SOILS OR BORROW MATERIALS WITH A PLASTICITY INDEX LESS THAN 18.
17. FOUNDATION CONCRETE SHALL BE PLACED IMMEDIATELY FOLLOWING EXCAVATION. A LEAN CONCRETE (1,500 PSI) MUD MAT SHALL BE PLACED OVER THE PREPARED BEARING MATERIALS IF EXCAVATION MUST REMAIN OPEN DURING INCLEMENT WEATHER OR FOR MORE THAN 72 HOURS.
18. CONTRACTOR SHALL EXERCISE CAUTION THAT DENSE GRADED AGGREGATE BLANKET BELOW FLOOR SLAB DOES NOT BECOME SATURATED DURING CONSTRUCTION. CONTRACTOR SHALL CAST FLOOR SLAB OR PROVIDE TEMPORARY PROTECTION FOR SUBGRADE UNTIL SLAB IS CAST TO PREVENT WATER INFILTRATION INTO SUBGRADE.
19. SURFACE RUNOFF SHALL BE DIRECTED AWAY FROM FOUNDATION EXCAVATIONS AND NOT BE PERMITTED TO POND WITHIN THE BUILDING FOOTPRINT. PROVIDE DRAINAGE TRENCHES FROM FOUNDATION EXCAVATIONS TO DIRECT RAINWATER OUT OF EXCAVATIONS.

CONCRETE CONSTRUCTION

1. ALL CONCRETE CONSTRUCTION TO BE IN ACCORDANCE WITH THE BUILDING CODE REQUIREMENTS FOR REINFORCED CONCRETE ACI 301, ACI 318 AND ACI DETAILING MANUAL, EXCEPT THAT CONSTRUCTION AND REMOVAL OF FORMS AND RESHORING SHALL BE INSPECTED BY THE CONTRACTOR'S ENGINEER.
2. FURNISH BAR SUPPORTS WHERE NECESSARY DURING CONSTRUCTION.
3. PROVIDE PLASTIC, PLASTIC-COATED (NOT PLASTIC-TIPPED) OR STAINLESS STEEL CHAIRS IN ALL CONCRETE EXPOSED TO VIEW IN COMPLETED STRUCTURE.
4. PROVIDE PIPE SLEEVES AND INSERTS IN CONCRETE WORK WHERE REQUIRED. SEE ARCHITECTURAL AND MECHANICAL DRAWINGS.
5. CONSTRUCTION JOINTS SHALL BE POSITIONED SO AS NOT TO CHANGE THE STRUCTURAL DESIGN REQUIREMENTS. FLOORS SHALL HAVE CONSTRUCTION JOINTS SO THAT NO MORE THAN 10,000 S.F. IS IN ANY SINGLE POUR AND THE MAXIMUM LENGTH OF POUR IS 100'-0". RATIO OF LENGTH TO WIDTH OF POUR SHALL NOT EXCEED 2. LOCATION OF ALL CONSTRUCTION JOINTS SHALL BE APPROVED BY THE ENGINEER.
6. WELDING OF REINFORCING BARS (INCLUDING TACK WELDING) IS NOT PERMITTED.
7. PROVIDE HORIZONTAL KEYWAYS IN CONSTRUCTION JOINTS IN WALLS, AND WALL FOOTINGS; MINIMUM 1 1/2" DEPTH WITH HEIGHT EQUAL TO ONE-THIRD OF MEMBER DEPTH, UNLESS OTHERWISE SHOWN OR NOTED.
8. ALL EXPOSED CORNERS OF CONCRETE SHALL BE CHAMFERED 45 DEGREES. MINIMUM CHAMFER TO BE 1/2". CURVE THE LEADING EDGE OF STAIR TREADS TO 1/2" RADIUS.
9. REINFORCING FOR SLABS ON GROUND (IN FLAT SHEETS) SHALL BE IN THE MIDDLE OF THE SLAB EXCEPT AS OTHERWISE NOTED AND SHALL BE POSITIVELY SUPPORTED AND MAINTAINED IN THIS POSITION DURING PLACEMENT OF CONCRETE.
10. BEND ALL HORIZONTAL WALL AND FOOTING BARS 1'-0" AROUND CORNERS OR PROVIDE CORNER BARS WITH 2'-0" LAP.
11. PROVIDE FOUNDATION DOWELS FOR ALL WALLS AND PIERS SAME SIZE AND SPACING AS VERTICAL STEEL.
12. PROVIDE FOUNDATION DOWELS FOR MASONRY WALLS SAME SIZE AND SPACING AS VERTICAL STEEL. ALL DOWELS SHALL BE WITHIN 8" LATERALLY OF WALL REINFORCING ABOVE AND IN LINE WITH THE WALL REINFORCING. PROVIDE DOWELS FOR ALL ADDITIONAL WALL REINFORCING AT CORNERS, ENDS, JAMBS, INTERSECTIONS AND BOTH SIDES OF CONTROL JOINTS. ONLY DOWELS AT THESE ADDITIONAL LOCATIONS MAY BE POST INSTALLED / DRILLED AND ADHESIVE FASTENED WITH EMBEDMENT AS REQUIRED TO DEVELOP FULL YIELD STRENGTH OF REINFORCING.
13. SPLICES: ALL REINFORCING SPLICES SHALL BE AS TENSION LAP, U.N.O.
    - A. LAP ALL COMPRESSION SPLICES 30 BAR DIAMETERS OF THE LARGER BAR.
    - B. LAP ALL TENSION SPLICES (ALL SPLICES EXCEPT COLUMN SPLICES, U.N.O.) IN ACCORDANCE WITH THE FOLLOWING TABLE. MODIFY LENGTHS AS NOTED:

BAR SIZE	CONCRETE COMPRESSIVE STRENGTH 3,000 PSI	4,000 PSI	5,000 PSI
#3	21"	19"	17"
#4	29"	25"	22"
#5	36"	31"	28"
#6	43"	37"	33"
#7	62"	54"	48"
#8	71"	62"	55"

1. INCREASE SPLICE LENGTH BY THE FOLLOWING:
2. NOTE: INCREASED LENGTHS ARE ACCUMULATIVE

1. HORIZONTAL TOP BARS WITH GREATER THAN 12" OF CONCRETE BELOW +30 %
2. BAR SPACING LESS THAN 2 BAR DIAMETERS +50 %

14. CONCRETE PROTECTION FOR REINFORCEMENT: COVER
    - A. CONCRETE CAST AGAINST AND PERMANENTLY EXPOSED TO EARTH .... 3"
    - B. CONCRETE EXPOSED TO EARTH OR WEATHER
      - NO. 6 THROUGH NO. 18 BARS .... 2"
      - NO. 5 BAR, W31 OR D31 WIRE AND SMALLER .... 1 ½"
    - C. CONCRETE NOT EXPOSED TO WEATHER OR IN CONTACT WITH GROUND SLABS, WALLS, AND JOISTS
      - NO. 11 BAR AND SMALLER .... ¾"

STEEL CONSTRUCTION

1. STEEL DETAILING, FABRICATION, AND ERECTION SHALL CONFORM TO THE AISC SPECIFICATIONS AND CODE OF STANDARD PRACTICE, AND THE AWS STRUCTURAL WELDING CODE.
2. CONNECTIONS - WELDED OR HIGH-STRENGTH BOLTED:
    - A. A325-SC, CLASS A, WITH HARDENED WASHERS - USE FOR ALL MOMENT CONNECTIONS, HANGERS, AND OTHER CONNECTIONS AS NOTED ON DRAWINGS.
    - B. A325-N WITH HARDENED WASHERS - USE FOR ALL CONNECTIONS OTHER THAN SLIP CRITICAL CONNECTIONS.
    - C. UNLESS SNUG-TIGHT CONNECTIONS ARE NOTED ON THE DRAWINGS AS BEING PERMITTED, ALL BOLTS SHALL BE TIGHTENED TO FULL PRETENSIONING LOAD.
    - D. UNLESS SPECIFICALLY NOTED ON THE DRAWINGS OR WITHOUT WRITTEN PERMISSION FROM THE ENGINEER, ALL BOLTS FOR THE PROJECT SHALL BE OF ONE ASTM TYPE AND ONE DIAMETER.
    - E. USE STANDARD HOLES WITH THE FOLLOWING EXCEPTIONS: OVERSIZE HOLES ARE PERMITTED WHEN BOLTS ARE LOADED IN TENSION; SHORT-SLOTTED HOLES ARE PERMITTED FOR SHEAR LOADING PERPENDICULAR TO THE SLOT IN ANY ONE PLY AT EACH FAYING SURFACE.
    - F. HARDENED WASHERS SHALL BE USED OVER ALL OVERSIZED OR SHORT-SLOTTED HOLES IN AN OUTER PLY. WHERE LONG-SLOTTED HOLES ARE USED IN AN OUTER PLY, 5/16" THICK A36 PLATE WASHERS OR CONTINUOUS BAR WITH STANDARD HOLES SHALL BE PROVIDED.
    - G. WHERE REACTION IS NOTED, DEVELOP SAME. WHERE NOT NOTED, FOR NON-COMPOSITE BEAMS, CONNECTIONS SHALL DEVELOP ONE-HALF OF THE TOTAL UNIFORM LOAD CAPACITY OF THE BEAM; FOR COMPOSITE BEAMS, SEE TABLE.
    - H. WHEREVER POSSIBLE, USE FRAMED BEAM CONNECTIONS AS LISTED IN TABLES 10-1, 10-2, 10-3,10-4, 10-10, 10-11 AND 10-12 OF THE AISC STEEL CONSTRUCTION MANUAL, 14TH EDITION. THE LENGTH OF CONNECTION ANGLES AND PLATES SHALL BE NOT LESS THAN ONE-HALF OF THE T DISTANCE OF THE BEAM WEB.
    - J. PREAPPROVED CONNECTION DETAILS ARE PROVIDED ON DRAWING _____.
    - K. SINGLE PLATE SHEAR CONNECTIONS ARE NOT PERMITTED WHERE THE REACTION EXCEEDS 50 KIPS, AT FIELD-APPLIED CONNECTIONS, OR CONNECTIONS TO COLUMNS (OTHER THAN AT SKEWED CONNECTIONS, MOMENT CONNECTIONS, PIPE COLUMNS, TUBE COLUMNS WITH FACE DIMENSION 4" OR LESS, OR CONNECTIONS WITH REACTIONS LESS THAN 15 KIPS).
    - L. THROUGH PLATE CONNECTIONS AT TUBE COLUMNS ARE NOT PERMITTED, UNLESS NOTED OTHERWISE. SHEAR CONNECTIONS TO TUBE COLUMNS SHALL BE WT OR DOUBLE ANGLE KNIFE CONNECTIONS, EXCEPT AS NOTED ABOVE.
    - M. WT SHEAR CONNECTIONS FROM GIRDERS (SUPPORTING JOISTS, PURLINS, PRECAST, ETC) TO TUBE COLUMNS SHALL BE 3 BOLTS MINIMUM DEPTH. WHERE GIRDER DEPTH ALLOWS ONLY 2 BOLT DEPTH, CONNECTION SHALL BE KNIFED DOUBLE ANGLE.
    - N. SHEAR CONNECTIONS TO VERTICAL EMBED PLATES IN CONCRETE WALLS SHALL BE DOUBLE ANGLE TYPE.
3. WELDING ELECTRODES SHALL BE E70XX EXCEPT WHERE OTHER ELECTRODES ARE REQUIRED FOR COMPATIBILITY WITH MATERIAL BEING WELDED.
    - A. USE E80XX ELECTRODES FOR WELDING ASTM A706 (WELDABLE) REBAR.
4. ALL SLIP CONNECTIONS SHALL BE PROVIDED WITH A MEANS OF PREVENTING THE NUTS FROM UNTHREADING.
5. SHOP DRAWINGS ARE REQUIRED AND SHALL NOTE TYPE OF ELECTRODES, SIZE OF ALL WELDS, AND TYPE AND SIZE OF ALL BOLTS.
6. SEE SPECIFICATIONS FOR ALL PRIMING REQUIREMENTS.
7. BEAMS BEARING ON MASONRY SHALL BEAR A MINIMUM OF 5" ONTO THE WALL, UNLESS OTHERWISE NOTED. BEAR BEAMS FULL LENGTH OF BEARING PLATES. MASONRY SHALL BE BUILT TIGHT AROUND BEAM UNLESS OTHERWISE NOTED.
8. ALL SHOP AND FIELD WELDING SHALL BE DONE BY A CERTIFIED WELDER.
9. FOR CONNECTIONS TO EXISTING CONCRETE, LOCATE THE REINFORCING BY MEANS OF A REBAR DETECTOR PRIOR TO DRILLING. ADJUST THE CONNECTION AS REQUIRED TO AVOID CUTTING ANY REINFORCING.
10. PROVIDE MINIMUM OF (4) 3/4" DIAMETER x 1'-0" EMBED ANCHOR BOLTS AND 2" GROUT UNDER ALL COLUMN BASE PLATES.
11. PROVIDE MINIMUM OF (2) 1/2" DIAMETER x 8" STUD ANCHORS UNDER ALL ROOF BEAM BEARING PLATES.
12. DO NOT WELD TO EXISTING STEEL WITHOUT WRITTEN APPROVAL FROM THE ENGINEER.
13. COLUMN SPLICES TO BE AS PER AISC DETAILING MANUAL WITH ADDITION OF 3/8" WEB PLATES EACH SIDE.
14. MISCELLANEOUS STEEL MEMBERS (ANGLES, TEES, CHANNELS, ETC.) THAT SUPPORT DECK AROUND THE PERIMETER OF A FLOOR OR ROOF AREA SHALL BE CONTINUOUS, EXCEPT AT BUILDING EXPANSION JOINTS. WHERE SPLICES IN THESE MEMBERS MUST OCCUR TO FACILITATE ERECTION, PROVIDE PARTIAL PENETRATION SQUARE GROOVE WELD (BUTT JOINT) WITH 3/16" EFFECTIVE THROAT ON ONE SIDE, EACH LEG.
15. MISCELLANEOUS HANGING LOADS SUCH AS STAIR STRINGERS, PIPES, MECHANICAL UNITS, ETC., SUPPORTED BY STEEL MEMBERS SHALL HAVE THESE LOADS APPLIED IN SUCH A MANNER THAT NO TORSIONAL FORCES ARE INDUCED IN THESE MEMBERS, I.E., LOADS SHALL PASS THROUGH THE CENTERLINE OF WIDE FLANGE SECTIONS AND THROUGH THE SHEAR CENTER OF CHANNELS.
16. STEEL RELIEF ANGLES THAT SUPPORT MASONRY VENEER SHALL BE INSTALLED AS FOLLOWS:
    - A. ANGLES SHALL BE DISCONTINUOUS AT ALL MASONRY VENEER EXPANSION JOINTS. WIDTH OF GAP BETWEEN ANGLES SHALL MATCH WIDTH OF MASONRY EXPANSION JOINT, NOT LESS THAN 1/2" OR MORE THAN 1".
    - B. AT BUILDING CORNER, THE ANGLES SHALL BE MITER CUT. THE VERTICAL LEGS OF THE ANGLES SHALL NOT EXTEND PAST THE CORNER CAUSING INTERFERENCE WITH THE MASONRY VENEER.
    - C. CLEAN ALL FIELD WELDS, CUTS AND ABRADED AREAS AND APPLY GALVANIZING REPAIR PAINT.

STEEL JOIST CONSTRUCTION

1. STEEL JOIST CONSTRUCTION SHALL CONFORM TO THE STANDARD SPECIFICATIONS AND CODE OF STANDARD PRACTICE FOR STEEL JOISTS AND JOIST GIRDERS OF THE STEEL JOIST INSTITUTE, LATEST EDITION.
2. PROVIDE STEEL JOIST END ANCHORAGE, BRIDGING AND BRIDGING ANCHORAGE IN ACCORDANCE WITH STANDARD SPECIFICATIONS OF THE STEEL JOIST INSTITUTE, LATEST EDITION. WELD ALL STEEL JOIST BEARING ENDS TO STEEL SUPPORTS OR BEARING PLATES.
3. JOIST BRIDGING SHOWN ON STRUCTURAL PLANS IS DIAGRAMMATIC ONLY. JOIST BRIDGING SHALL BE DESIGNED AND FURNISHED TO COMPLY WITH THE REQUIREMENTS OF THE STEEL JOIST INSTITUTE SPECIFICATION AND ANY REQUIREMENTS SHOWN IN THE CONSTRUCTION DOCUMENTS.
4. IN ADDITION TO THE HORIZONTAL BRIDGING REQUIRED BY THE STEEL JOIST INSTITUTE FOR ROOF JOISTS, PROVIDE A SINGLE LINE OF BOTTOM CHORD BRIDGING NEAR THE FIRST BOTTOM CHORD PANEL POINT AT EACH END OF THE JOISTS. NET UPLIFT ON JOISTS = COMPONENT AND CLADDING ZONE UPLIFT MINUS ACTUAL MINIMUM DEAD LOAD OF ___ PSF. REFER TO WIND ZONE DIAGRAM.
5. WHEN HORIZONTAL BRIDGING IS USED AT THE TOP AND BOTTOM CHORDS OF STEEL JOISTS, PROVIDE ADDITIONAL ANGLE X-BRIDGING BETWEEN THE FIRST, SECOND AND THIRD JOISTS FROM EXTERIOR WALLS OR SPANDRELS (TWO JOIST SPACES).
6. WHERE JOIST TOP CHORD EXTENSIONS ARE SHOWN, PROVIDE EXTENSIONS MATCHING UNIFORM LOAD CAPACITY OF THE BACKSPAN, UNLESS NOTED OTHERWISE. EXTENSIONS MAY BY TYPE S OR R, AT MANUFACTURER'S OPTION, UNLESS NOTED OTHERWISE.
7. HOLD BACK END OF JOIST EXTENSIONS 1/2" FROM FACE OF PERIMETER STEEL (ANGLES, PLATE, ETC.) TO ALLOW FOR ERECTION TOLERANCES, UNLESS NOTED OTHERWISE.
8. STEEL JOIST BEARING PLATES ON BEARING WALLS SHALL BE SET 1/2 INCH FROM THE FACE OF THE WALL. EXTEND JOIST SEAT FULL WIDTH OF BEARING PLATE, UNLESS NOTED OTHERWISE. MINIMUM JOIST EXTENSION LENGTH OVER BEARING WALLS SHALL BE 4" NOMINAL FOR K-SERIES AND 6" NOMINAL FOR LH-SERIES.
9. MINIMUM BEARING REQUIREMENTS ONTO STRUCTURAL STEEL GIRDERS AND BEARING PLATES UNLESS NOTED OTHERWISE SHALL BE:
    - K-SERIES 2 1/2"
    - LH-SERIES 4"
    - SLH-SERIES 6"
10. SPECIAL PROFILE STEEL JOISTS INDICATED IN THE DRAWINGS SHALL BE DESIGNED, FABRICATED, AND INSTALLED PER THE REQUIREMENTS OF LH-SERIES JOISTS, UNLESS NOTED OTHERWISE.
11. WHERE STEEL JOISTS OCCUR AT COLUMN LINES, EXTEND JOIST BOTTOM CHORD TO COLUMN AND SANDWICH STABILIZER PLATE PROVIDED BY STRUCTURAL STEEL FABRICATOR. DO NOT MAKE ANY PERMANENT FASTENING FROM JOIST TO STABILIZER PLATE. THE STABILIZER PLATE SHALL BE A MINIMUM OF 6"x6" AND SHALL EXTEND AT LEAST 3" BELOW THE JOIST BOTTOM CHORD WITH A 13/16"ø HOLE TO PROVIDE AN ATTACHMENT POINT FOR GUYING CABLES.
12. IN STEEL BUILDING FRAME SYSTEMS, STEEL JOISTS AT COLUMN CENTERLINES AND STEEL JOISTS OVER 40 FEET IN LENGTH SHALL BE FIELD BOLTED AT THE END CONNECTIONS TO PROVIDE LATERAL STABILITY DURING ERECTION. THE FINAL CONNECTION SHALL BE MADE BY WELDING ADDITIONAL TO THE ERECTION BOLTS.
13. WHERE STEEL JOIST AND BEAMS ABUT A GIRDER FROM OPPOSITE SIDES EXTEND JOIST SEAT TO COVER FULL BEAM FLANGE. ABUTTING JOIST ENDS SHALL HAVE ½" CLEAR BETWEEN JOIST ENDS.
14. MINIMUM CONNECTION TO STRUCTURE UNLESS NOTED OTHERWISE SHALL BE:

JOIST TYPE			TO COLUMNS OR SPAN>40'
K-SERIES	1 TO 12	(2) 1/8"x2 1/2" FILLET WELD	PLUS (2) 1/2"ø BOLTS
LH-SERIES	02 TO 17	(2) 1/4"x3" FILLET WELD	PLUS (2) 3/4"ø BOLTS
	18 TO 25	(2) 1/4"x5" FILLET WELD	PLUS (2) 3/4"ø BOLTS

15. IF JOIST BEARING SEATS ARE DETAILED FOR A BOLTED CONNECTION, BOLTS SHALL BE INSTALLED. IF HOLE MISALIGNMENT OCCURS, ADDITIONAL FILLET WELD MATCHING SIZE OF BASE CONNECTION SHALL BE DEPOSITED FULL LENGTH OF BOLT SLOTS ON SIDES CLOSEST TO JOIST CENTERLINE AS A SUBSTITUTION.

STEEL DECK CONSTRUCTION

1. STEEL DECK DETAILING, FABRICATION, AND ERECTION SHALL CONFORM TO THE LATEST, AWS STRUCTURAL WELDING CODE AND THE STEEL DECK INSTITUTE SPECIFICATIONS.
2. STEEL ROOF DECK SHALL BE CONTINUOUS OVER A MINIMUM OF 3 SPANS. STEEL FLOOR DECK SHALL BE CONTINUOUS OVER A MINIMUM OF 2 SPANS.
3. DO NOT HANG OR SUPPORT ANY LOADS SUCH AS STUD WALLS, BULKHEADS, PIPES, ETC. FROM STEEL ROOF DECK.
4. WHERE JOISTS/BEAMS DO NOT ALIGN ON OPPOSITE SIDES OF A GIRDER AND A JOINT IS MADE IN THE DECK, PROVIDE AN ADDITIONAL LAYER OF SINGLE SPAN DECK ABOVE CANTILEVERED ENDS TO SPAN BETWEEN SUPPORTS.
5. ROOF DECK CLOSURES AND ACCESSORIES SHALL BE LOCATED IN THE FIELD OF DIAPHRAGM, NOT AT DIAPHRAGM COLLECTOR LOCATIONS SUCH AS MOMENT FRAMES, BRACED FRAMES OR SHEAR WALLS.

COLD-FORMED STEEL FRAMING

1. THE FOLLOWING NOTES APPLY ONLY TO LOAD BEARING FRAMING OR FRAMING LOCATED IN EXTERIOR WALLS. STUD WALLS SHOWN ON THE STRUCTURAL PLANS SHALL BE CONSIDERED BEARING WALLS. SEE ARCHITECTURAL DRAWINGS FOR NON-LOAD BEARING INTERIOR PARTITIONS, SOFFITS, AND OTHER MISCELLANEOUS FRAMING.
2. ALL COLD-FORMED STEEL FRAMING SHALL BE CONSTRUCTED IN ACCORDANCE WITH THE AMERICAN IRON AND STEEL INSTITUTE "COLD-FORMED STEEL DESIGN MANUAL" (AISI, LATEST EDITION).
3. THE CONTRACTOR SHALL BE RESPONSIBLE FOR ANY AND ALL TEMPORARY SHORING AND BRACING REQUIRED DURING CONSTRUCTION FOR ERECTION STABILITY AND SAFETY.
4. THE FORMAT FOR MEMBER DESIGNATION IS AS FOLLOWS:
   WEB DEPTH; SECTION TYPE; FLANGE WIDTH - BASE METAL THICKNESS (IN MILS)
   SECTION TYPE DESIGNATIONS ARE AS FOLLOWS:
   - S STUD AND JOIST SECTION WITH FLANGE STIFFENERS (RETURN LIPS)
   - T TRACK SECTIONS (NO FLANGE STIFFENERS)
   - U COLD-ROLLED CHANNEL AND CHANNEL STUDS (NO FLANGE STIFFENERS)
   - F FURRING CHANNEL

   EXAMPLE: 600S162-54 DESIGNATES A 6" STUD WITH A FLANGE WIDTH OF 1 5/8" AND 54 MILS BASE STEEL THICKNESS.
   EXAMPLE: 400T125-43 DESIGNATES A 4" TRACK WITH A FLANGE WIDTH OF 1 1/4" AND 43 MILS BASE STEEL THICKNESS.
5. THE MINIMUM BASE METAL THICKNESS FOR COLD-FORMED STEEL FRAMING MATERIAL SHALL BE AS FOLLOWS:

MIL THICKNESS (0.001 INCHES)	GAGE DESIGNATION (FOR REFERENCE ONLY)	MINIMUM BASE METAL THICKNESS PRIOR TO GALVANIZING (INCH)
18	25	0.0179
28	22	0.0269
33	20	0.0329
43	18	0.0428
54	16	0.0538
68	14	0.0677
97	12	0.0966
118	10	0.1180

6. ALL MATERIAL SHALL BE COLOR-CODED TO INDICATE DIFFERENT STEEL MATERIAL THICKNESSES.
7. ALL MATERIAL EQUAL TO OR LESS THAN 43 MILS IN THICKNESS SHALL CONFORM TO ASTM A653 WITH G60 GALVANIZED COATING AND HAVE A MINIMUM YIELD STRENGTH OF 33 KSI.
8. ALL MATERIAL EQUAL TO OR GREATER THAN 54 MILS IN THICKNESS SHALL CONFORM TO ASTM A653 WITH G60 GALVANIZED COATING AND HAVE A MINIMUM YIELD STRENGTH OF 50 KSI.
9. ALL STUD AND JOIST MATERIAL SHALL BE PRE-PUNCHED WITH 1 1/2" x 4" WEB OPENINGS SPACED AT 24" O.C. UNLESS OTHERWISE NOTED. ALL OPENINGS SHALL BE LOCATED A MINIMUM OF 10" (TO EDGE OF OPENING) FROM THE END OF THE MEMBER.
10. ALL SCREWS SHALL BE SELF-DRILLING, SELF-THREADING, ZINC-COATED STEEL DRILL SCREWS, WITH LOW PROFILE HEADS WHEN USED BENEATH SHEATHING. MAINTAIN MINIMUM CLEARANCES AS SPECIFIED BELOW:

SCREW NUMBER DESIGNATION	NOMINAL SCREW DIAMETER (IN)	MINIMUM CENTER-TO-CENTER SPACING	MINIMUM EDGE DISTANCE	TOTAL PANEL THICKNESS STEEL TO STEEL
10	0.190	9/16"	9/16"	0.11 MAXIMUM #2 POINT 0.175 MAXIMUM #3 POINT
12	0.216	5/8"	5/8"	0.14 MAXIMUM #2 POINT 0.21 MAXIMUM #3 POINT
1/4"	0.250	3/4"	3/4"	0.175 MAXIMUM #2 POINT 0.21 MAXIMUM #3 POINT

11. POWDER ACTUATED FASTENERS USED FOR FASTENING COLD-FORMED METAL FRAMING (RUNNER TRACKS, CLIP ANGLES, ETC.) TO CONCRETE SHALL BE 1 1/4" LONG, 0.157" SHANK DIAMETER, WITH PRE-MOUNTED PLASTIC WASHER. OTHER FASTENERS OF EQUIVALENT OR LARGER DIMENSION AND WITH EQUIVALENT OR GREATER LOAD CAPACITY MAY BE SUBSTITUTED UPON REVIEW AND APPROVAL FROM THE STRUCTURAL ENGINEER. FASTENERS SHALL BE ZINC PLATED WITH A MINIMUM ZINC THICKNESS OF 5 MICRONS.
12. POWDER ACTUATED FASTENERS USED FOR FASTENING COLD-FORMED METAL FRAMING (RUNNER TRACKS, CLIP ANGLES, ETC.) TO STEEL SHALL BE 3/4" LONG, 0.157" SHANK DIAMETER, WITH PRE-MOUNTED PLASTIC WASHER. OTHER FASTENERS OF EQUIVALENT OR LARGER DIMENSION AND WITH EQUIVALENT OR GREATER LOAD CAPACITY MAY BE SUBSTITUTED UPON REVIEW AND APPROVAL FROM THE STRUCTURAL ENGINEER. FASTENERS SHALL BE ZINC PLATED WITH A MINIMUM ZINC THICKNESS OF 5 MICRONS.
13. ALL WELDED CONNECTIONS SHALL BE IN ACCORDANCE WITH THE ANSI/AWS D1.3 "STRUCTURAL WELDING CODE," LATEST EDITION.
14. ALL LOADBEARING AND EXTERIOR WALLS SHALL BE BRACED BY EITHER 150U50-54 COLD ROLLED CHANNEL, RUN HORIZONTALLY THROUGH THE STUD PUNCHOUTS AND ATTACHED TO EACH STUD, OR BY MINIMUM 1 1/2" WIDE x 20 GA STEEL STRAP RUN HORIZONTALLY ON BOTH SIDES OF STUDS AND ATTACHED TO EACH STUD. VERTICAL SPACING OF THE BRACING IS LIMITED TO A MAXIMUM OF 48" THROUGHOUT THE HEIGHT OF THE FRAMING. THE BRIDGING SHALL BE MADE TAUT DURING INSTALLATION AND SHALL NOT SAG OR BOW ALONG ITS LENGTH.
15. BRIDGING AND SHEAR WALL STRAPS SHALL BE IN PLACE PRIOR TO PLACEMENT OF SUPERIMPOSED LOADS ON STUD OR JOIST ASSEMBLIES. ALL SHALL BE TAUT BY PRE-TENSIONING. PRE-TENSIONING LOAD SHALL NOT EXCEED VALUES LISTED IN TABLE BELOW. INTERPOLATION MAY BE UTILIZED.

ONE-INCH WIDE STRAP BASE STEEL THICKNESS (MILS)	MAXIMUM ALLOWABLE PRETENSION LOAD PER INCH WIDTH (LBS)
33	75
43	100
54	180
68	230

16. STUDS AND JOIST ENDS SHALL BE SAWN TO FIT SQUARELY AND EVENLY AGAINST THE CONNECTING MEMBER. STUDS SHALL NOT BE THERMALLY CUT.
17. ALIGN BEARING WALL STUDS DIRECTLY BELOW FLOOR JOISTS AND ROOF TRUSSES. SEE PLAN FOR LAYOUT.
18. CONSTRUCT ALL CORNERS AND INTERSECTIONS WITH NOT LESS THAN THREE STUDS.
19. PROVIDE AND INSTALL A MINIMUM OF TWO FULL-HEIGHT STUDS (IN ADDITION TO JACK STUD OR STUDS) AT THE JAMBS OF ALL OPENINGS (WINDOWS, DOORS, LOUVERS, ETC.) EXCEEDING 2'-0" IN WIDTH.
20. SPLICES OR CUTOUTS IN THE FLANGES OF EXTERIOR WALL STUDS ARE PROHIBITED. EXTERIOR WALL STUDS SHALL RUN FULL HEIGHT FROM FLOOR TO FLOOR OR FLOOR TO ROOF WITHOUT SPLICE.
21. SEE HEADER SCHEDULE FOR HEADER SIZE AND NUMBER OF JACK STUDS.
22. SEE COLD-FORMED METAL FRAMING SCHEDULE FOR MATERIAL SIZES AND SPACINGS.
23. WHERE A DEFLECTION CLIP OR STATIC/RIGID CLIP IS NOTED TO COLD-FORMED FRAMING, CLIP SHALL OCCUR AT EACH MEMBER IN THE FRAMING SYSTEM UNLESS NOTED OTHERWISE (e.g. CLIP NOTED TO STUD WALL FRAMING SHALL OCCUR AT EACH STUD IN THE WALL SYSTEM).
24. THE OWNER MAY EMPLOY AN INDEPENDENT TESTING AGENCY TO PERFORM FIELD TESTS AND INSPECTION OF COLD-FORMED CONSTRUCTION FOR CONFORMANCE WITH CONTRACT DOCUMENTS. THE CONTRACTOR SHALL FACILITATE AND ALLOW ACCESS TO THE WORK FOR TESTS AND INSPECTIONS TO BE PERFORMED.
25. SUBMIT REPORTS DETAILING RESULTS OF ALL INSPECTIONS AND TESTING TO THE ARCHITECT/ENGINEER FOR APPROVAL WITHIN FIVE DAYS OF COMPLETION OF THE TESTS.
26. FIELD MODIFICATIONS OF COLD-FORMED STEEL SYSTEMS SHALL NOT BE ALLOWED WITHOUT PRIOR APPROVAL BY ENGINEER OF RECORD.

PRE-ENGINEERED STEEL BUILDING CONSTRUCTION

1. PRE-ENGINEERED BUILDING CONTRACTOR IS SOLELY RESPONSIBLE FOR THE DESIGN AND INSTALLATION OF THE BUILDING STRUCTURE.
2. CONTRACTOR SHALL SUBMIT DRAWINGS AND CALCULATIONS SIGNED AND SEALED BY A PROFESSIONAL ENGINEER LICENSED IN THE STATE OF KENTUCKY FOR REVIEW BY THE ARCHITECT AND ENGINEER.
3. STRUCTURE SHALL BE DESIGNED FOR:
    - A. STRUCTURE SELFWEIGHT (INCLUDING ROOF SYSTEM).
    - B. COLLATERAL DEAD LOAD OF 8 PSF.
    - C. SNOW, WIND, EARTHQUAKE AND ROOF LIVE LOAD AS SHOWN IN "DESIGN LOADS" SECTION.
    - D. ROOF TOP MECHANICAL UNITS (COORDINATE WITH MECHANICAL CONTRACTOR).
    - E. OVERHEAD SCORING EQUIPMENT (COORDINATE WITH EQUIPMENT SUPPLIER).
4. LIMIT BUILDING DRIFT TO H/180 UNDER LOAD COMBINATIONS THAT INCLUDE WIND. DRIFT LIMITATIONS FOR SEISMIC LOADING ARE DEFINED IN THE KENTUCKY BUILDING CODE.
5. IN ADDITION TO THE BUILDING FRAME, THE PRE-ENGINEERED BUILDING CONTRACTOR SHALL DESIGN, PROVIDE, AND INSTALL:
    - A. ANCHOR BOLTS (DIAMETER SELECTION FOR SHEAR AND TENSION)
    - B. FRAMING FOR WALL OPENINGS
    - C. FRAMING FOR ROOF OPENINGS
6. COLUMN PIERS AND FOOTINGS ARE DESIGNED ASSUMING PINNED COLUMN BASES. FIXED COLUMN BASES ARE NOT PERMITTED.
7. THE COMPLETE FOUNDATION SYSTEM (INCLUDING TENSION TIES) MUST BE INSTALLED PRIOR TO ERECTING THE STEEL STRUCTURE.
8. METAL ROOFING SHALL BE ASSUMED TO HAVE ZERO CAPACITY FOR DIAPHRAGM ACTION.
9. DEFLECTION OF FRAME BEAM SHALL NOT EXCEED L/180 DUE TO TOTAL LOAD AND L/240 DUE TO LIVE LOAD, WHERE L IS THE DISTANCE FROM EAVE TO EAVE.

ROOF, FLOOR, OR WALL OPENINGS

1. THE CONTRACTOR SHALL VERIFY AND COORDINATE THE NUMBER, SIZE, AND LOCATION OF ALL SLEEVES AND OPENINGS REQUIRED FOR MECHANICAL OR ELECTRICAL ITEMS.
2. SLEEVES AND OPENINGS SHALL BE LOCATED IN A MANNER THAT WILL MAINTAIN THE STRUCTURAL INTEGRITY OF THE ROOF, FLOOR, OR WALL SYSTEM.
3. NO STRUCTURAL ELEMENTS ARE TO BE CUT UNLESS SPECIFICALLY APPROVED BY THE ENGINEER.

OPENINGS / PENETRATIONS / ATTACHMENTS TO STRUCTURE BY OTHER TRADES

1. THE CONTRACTOR SHALL COORDINATE AND VERIFY THE NUMBER, SIZE, AND LOCATION OF ALL SLEEVES AND OPENINGS REQUIRED FOR OTHER TRADES IN STRUCTURAL ELEMENTS.

TO STRUCTURAL STEEL

1. FIELD CUTTING/DRILLING OF HOLES LARGER THAN 3/8" INTO BEAM FLANGES OR COLUMNS IS PROHIBITED EXCEPT WHERE REQUIRED FOR STRUCTURAL STEEL CONNECTIONS.
2. PENETRATIONS / HOLES THROUGH BEAM WEBS MAY BE POSSIBLE. TRADE CONTRACTOR SHALL BE RESPONSIBLE FOR ENGINEERING COST TO VERIFY ADEQUACY AND DESIGN AND FOR INSTALLATION COST OF OPENING AND ANY REINFORCEMENT.

TO OPEN WEB STEEL JOIST

1. DO NOT FIELD CUT ANY PORTION OF A STEEL JOIST.
2. FIELD DRILLING OF HOLES OF ANY SIZE INTO THE CHORDS OF A STEEL JOIST IS PROHIBITED EXCEPT WHERE REQUIRED FOR STRUCTURAL STEEL CONNECTIONS.
3. SUSPENDED LOADS OF LESS THAN 100 LBS MAY BE FASTENED THROUGH THE NEUTRAL AXIS OF A SINGLE ANGLE OF THE BOTTOM CHORD (ECCENTRIC TO THE JOIST) USING APPROPRIATELY-SIZED CLAMPING ANCHORS WITHOUT REINFORCEMENT OF THE JOIST. SUSPENDED LOADS OF LESS THAN 250 LBS MAY BE FASTENED CONCENTRICALLY TO THE TOP OR BOTTOM CHORD (BETWEEN THE ANGLES) USING APPROPRIATELY-SIZED HANGERS WITHOUT REINFORCEMENT OF THE JOIST. ONLY ONE CONCENTRATED LOAD IS ALLOWED PER JOIST WEB PANEL. ALL OTHER CONCENTRATED LOADS IN EXCESS OF THESE FORCES SHALL HAVE THE JOIST LOCALLY REINFORCED WITH FIELD-WELDED ANGLE TO THE OPPOSING CHORD'S NEAREST PANEL POINT. SEE STRUCTURAL DRAWINGS.

TO ROOF DECK

1. NO PENETRATIONS LARGER THAN 12" IN DIAMETER / SQUARE SHALL BE FIELD CUT IN THE STRUCTURAL MEMBER WITHOUT APPROVAL OF THE ENGINEER OF RECORD FOR THAT ELEMENT.
2. CUTTING / CORING OF ADJACENT PENETRATIONS, PERPENDICULAR TO THE STRUCTURAL SPAN, SHALL BE AVOIDED. ADJACENT PENETRATIONS THAT REMOVE MORE THAN 20% OF SUCH STRUCTURAL ELEMENT, IN ANY GIVEN 3-FOOT LENGTH, ARE PROHIBITED.

MAINTENANCE STATEMENT AND STRUCTURE LIFESPAN

1. THE ENGINEER MAKES NO CLAIM OR AGREEMENT AS TO THE LIFESPAN OF THE BUILDING STRUCTURE. THE CLIENT AND OWNER SHALL UNDERSTAND THAT STRUCTURAL TYPES DO HAVE LIFESPAN RELATIVE TO INITIAL COST AND MAINTENANCE AND THAT BY REQUESTING OR ACCEPTING A STRUCTURAL SYSTEM OF LOWER INITIAL COST THAT THE USEABLE LIFESPAN WILL DECREASE AND MAINTENANCE INCREASE.
2. ALL STRUCTURES REQUIRE PERIODIC MAINTENANCE TO EXTEND LIFESPAN AND TO ENSURE STRUCTURAL INTEGRITY FROM EXPOSURE TO THE ENVIRONMENT. THE ENGINEER SHALL NOT BE HELD LIABLE FOR MAINTENANCE REQUIREMENTS OR DETERIORATION RESULTING FROM LACK OF BUILDING MAINTENANCE.
3. A PLANNED PROGRAM OF MAINTENANCE SHALL INCLUDE ITEMS SUCH AS, BUT NOT LIMITED TO: PAINTING OF STRUCTURAL STEEL AND LINTELS, PROTECTIVE COATING FOR CONCRETE AND TIMBER, SEALANTS, CAULKED JOINTS, EXPANSION JOINTS, CONTROL JOINTS, TIMELY REPAIR OF SPALLS AND CRACKS IN CONCRETE, AND PRESSURE WASHING OF STRUCTURAL ELEMENTS EXPOSED TO A SALT ENVIRONMENT OR OTHER HARSH CHEMICALS.

STRUCTURAL ABBREVIATIONS

APA	AMERICAN PLYWOOD ASSOCIATION
ARCH	ARCHITECTURAL
B.L.E.	BRICK LEDGE ELEVATION
BOT	BOTTOM
BTWN	BETWEEN
CANT	CANTILEVER BEAM
C.F.S.	COLD-FORMED STEEL
C.I.P.	CAST-IN-PLACE
CJP	COMPLETE JOINT PENETRATION
CLR	CLEAR
C.M.U.	CONCRETE MASONRY UNIT
COL	COLUMN
CONC	CONCRETE
CONT	CONTINUOUS
D	DEEP
DET	DETAIL
D.G.A.	DENSE GRADED AGGREGATE
DWGS	DRAWINGS
EA	EACH
E.F.	EACH FACE
ELEV	ELEVATION
EMBED	MINIMUM EMBEDMENT DEPTH INTO SUBSTRATE
E.O.S.	EDGE OF SLAB
E.W.	EACH WAY
EX	EXISTING
EXP	EXPANSION
F.F.E.	FINISHED FLOOR ELEVATION
F.R.C.	FIBER REINFORCED CONCRETE
F.R.P.	FIBER REINFORCED POLYMER
F.R.T.	FIRE RESISTANCE TREATED
F.S.	FAR SIDE
FTG	FOOTING
F.V.	FIELD VERIFY
GA	GAUGE
GALV	GALVANIZED
HORIZ	HORIZONTAL
HSS	HOLLOW STRUCTURAL SECTION
I.C.F.	INSULATED CONCRETE FORM
LBS	POUNDS
L.D.H.	LONG DIMENSION HORIZONTAL
L.D.V.	LONG DIMENSION VERTICAL
LVL	LAMINATED VENEER LUMBER
MANUF.	MANUFACTURER
MAX	MAXIMUM
MECH	MECHANICAL
M.E.P.	MECHANICAL/ELECTRICAL/PLUMBING
MIN	MINIMUM
N.S.	NEAR SIDE
N.T.S.	NOT TO SCALE
O.C.	ON CENTER
O.P.H.	OPPOSITE HAND
P.A.F.	POWDER ACTUATED FASTENER
P.E.M.B.	PRE-ENGINEERED METAL BUILDING
PJP	PARTIAL JOINT PENETRATION
PL	PLATE
R	RADIUS
REINF	REINFORCEMENT
R.T.U.	ROOF TOP UNIT (MECHANICAL)
S.C.	SLIP CRITICAL
SIM	SIMILAR
S.O.G.	SLAB ON GRADE
SP	COLUMN SPLICE
S.S.	STAINLESS STEEL
STD	STANDARD
TYP	TYPICAL
U.N.O.	UNLESS NOTED OTHERWISE
VERT	VERTICAL
W	WIDE
W.W.F.	WELDED WIRE FABRIC

MATERIAL LEGEND

- NATIVE EARTH / ENGINEERED FILL
- CONCRETE
- DENSE GRADED AGGREGATE (DGA)
- MASONRY GROUT "IN SECTION"
- RAISED FLOOR
- RECESSED FLOOR
- C.M.U. "IN SECTION"
- BRICK "IN SECTION"

JRA architects
3225 Summit Square Place, Suite 200
Lexington, Kentucky 40509
859.252.6781

NOT FOR CONSTRUCTION

BROWN+KUBICAN
STRUCTURAL ENGINEERS
546 East Main Street, Suite 300
Lexington, KY 40508
859-543-0933
www.brownkubican.com

RFP 2 DRAWINGS

UK INDOOR TRACK FACILITY

UNIVERSITY OF KENTUCKY
700 SPORTS CENTER DRIVE LEXINGTON, KENTUCKY 40506

STRUCTURAL

PROJECT	202258
DATE	08/31/2022

REVISIONS

No.	Description	Date

JRA ARCHITECTS HAS RETAINED AN ELECTRONIC VERSION OF THESE DRAWINGS. THE CLIENT AGREES NOT TO REUSE THESE DRAWINGS - IN ELECTRONIC OR ANY OTHER FORMAT - IN WHOLE, OR IN PART, FOR ANY PURPOSE OTHER THAN FOR THE PROJECT. THE CLIENT AGREES NOT TO TRANSFER THESE ELECTRONIC FILES TO OTHERS WITHOUT THE PRIOR WRITTEN CONSENT OF THE ARCHITECT. THE CLIENT FURTHER AGREES TO WAIVE ALL CLAIMS AGAINST THE ARCHITECT RESULTING IN ANY WAY FROM ANY UNAUTHORIZED CHANGES TO OR REUSE OF THE ELECTRONIC FILES FOR ANY OTHER PROJECT BY ANYONE OTHER THAN THE ARCHITECT.

GENERAL NOTES

S-102

COPYRIGHT 2022 - JRA, INC.

8/26/2022 3:09:43 PM

C:_REVIT_Locals\22157 (UK INDOOR TRACK AND FIELD) STR - RVT21_anorberg28LBG.rvt

STRUCTURAL SPECIAL INSPECTIONS CHART

COMPONENT	TEST OR SPECIAL INSPECTION	PERIODIC OR CONTINUOUS	ACCEPTABLE QUALIFICATIONS
FABRICATORS (IBC 1704.2.5)	INSPECT THE FABRICATION OF STRUCTURAL LOAD-BEARING MEMBERS WHERE SUCH WORK IS BEING PERFORMED ON THE PREMISES OF THE FABRICATOR'S SHOP. 1. FABRICATORS SHALL BE EXEMPT FROM SPECIAL INSPECTION WHEN A QUALIFIED CERTIFICATION AUTHORITY HAS PERIODICALLY REVIEWED AND APPROVED FABRICATOR'S WRITTEN PROCEDURAL AND QUALITY CONTROL MANUALS AND FABRICATION PRACTICES. SUBJECT TO COMPLIANCE WITH KENTUCKY BUILDING CODE REQUIREMENTS, QUALIFIED CERTIFICATION AUTHORITIES PROVIDING CERTIFICATION WHICH MAY BE APPLICABLE TO PROJECT INCLUDE, BUT ARE NOT LIMITED TO, THE FOLLOWING: a. STRUCTURAL STEEL FABRICATORS – AISC CERTIFIED. b. PRE-ENGINEERED METAL BUILDING SYSTEM FABRICATORS - IAS INSPECTION PROGRAMS FOR MANUFACTURERS OF METAL BUILDING SYSTEMS, AC472. c. STEEL JOIST FABRICATORS – SJI CERTIFIED.	PERIODIC	COMPLY WITH SECTIONS BELOW WHEN REQUIRED
	VERIFY THAT THE FABRICATOR MAINTAINS AND REVIEW FOR COMPLETENESS FABRICATOR'S DETAILED FABRICATION AND QUALITY CONTROL PROCEDURES, WHICH PROVIDE A BASIS FOR CONTROL OF THE WORKMANSHIP AND ABILITY TO CONFORM TO THE APPROVED CONSTRUCTION DOCUMENTS AND REFERENCE STANDARDS. REVIEW THE PROCEDURES FOR COMPLETENESS AND ADEQUACY RELATIVE TO THE CODE REQUIREMENTS FOR THE FABRICATOR'S SCOPE OF WORK.	PERIODIC	QUALIFIED CERTIFICATION AUTHORITY
	PERFORM SPECIAL INSPECTIONS AT FABRICATOR'S SHOP AS OUTLINED IN THIS CHART FOR EACH TYPE OF CONSTRUCTION.	- - - -	
STEEL (AND OTHER METAL) CONSTRUCTION (IBC 1705.2)	PROVIDE SPECIAL INSPECTION OF THE FABRICATION OF STEEL STRUCTURAL ELEMENTS AND ASSEMBLIES IN ACCORDANCE WITH THE FABRICATORS SECTION IN THIS CHART.	- - - -	
	VERIFY THAT CERTIFICATION NUMBERS ON BOLT, NUT, AND WASHER CONTAINERS CORRESPOND TO THE IDENTIFICATION NUMBERS ON MILL TEST REPORTS AND THAT MANUFACTURER'S SYMBOL AND GRADE MARKINGS APPEAR ON ALL BOLTS AND NUTS. ALSO VERIFY THAT BOLTS, NUTS, AND WASHERS ARE BEING PROPERLY CARED FOR AT THE SITE.	PERIODIC	CWI, SSSI, SWSI
	VERIFY THAT IDENTIFICATION MARKINGS ON STRUCTURAL STEEL MEMBERS CONFORM TO ASTM STANDARDS SPECIFIED ON THE APPROVED CONSTRUCTION DOCUMENTS.	PERIODIC	CWI, SSSI, SWSI
	VERIFY THAT IDENTIFICATION MARKINGS ON WELD FILLER MATERIALS CONFORM TO ASTM STANDARDS SPECIFIED ON THE APPROVED CONSTRUCTION DOCUMENTS. ALSO VERIFY THAT WELD FILLER MATERIAL IS BEING PROPERLY CARED FOR.	PERIODIC	CWI, SSSI, SWSI
	VERIFY THAT ANCHOR RODS AND OTHER EMBEDMENTS THAT ARE TO SUPPORT STRUCTURAL STEEL ARE OF PROPER DIAMETER, GRADE, TYPE, LENGTH, AND EXTENT OF EMBEDMENT PRIOR TO PLACEMENT OF CONCRETE.	PERIODIC	CWI, SSSI, SWSI
	TEST AND INSPECT HIGH-STRENGTH BOLTED CONNECTIONS ACCORDING TO RCSC'S "SPECIFICATION FOR STRUCTURAL JOINTS USING ASTM A325 OR A490 BOLTS." 1. VERIFY THAT FASTENERS ARE OF CORRECT GRADE, TYPE, DIAMETER, LENGTH, AND SHEAR PLANE LOCATIONS FOR THE JOINT DETAIL. 2. VERIFY THAT CONNECTING ELEMENTS MEET REQUIREMENTS FOR FAYING SURFACE AND HOLE PREPARATION. 3. PROVIDE PRE-INSTALLATION VERIFICATION TESTING OF FASTENER ASSEMBLIES AND METHODS. a. UTILIZE A TENSION CALIBRATOR TO CONFIRM THE SUITABILITY OF THE COMPLETE FASTENER ASSEMBLY FOR PRETENSIONED INSTALLATION AND CONFIRM THE PROCEDURE AND PROPER USE BY THE BOLTING CREW OF THE PRETENSIONING METHOD TO BE USED. b. ENSURE THAT JOINT PLIES ARE BROUGHT TO SNUG-TIGHT CONDITION PRIOR TO PRETENSIONING OPERATION. c. CONFIRM FASTENER COMPONENT IS NOT TURNED BY THE WRENCH PREVENTING ROTATION. d. CONFIRM THAT FASTENERS ARE PRETENSIONED PROGRESSING SYSTEMATICALLY FROM THE MOST RIGID PART TOWARDS THE FREE EDGES. 4. VERIFY THAT FASTENER ASSEMBLIES WITH REQUIRED WASHERS ARE PLACED IN ALL HOLES AND ARE POSITIONED AS REQUIRED. a. VERIFY THAT DIRECT-TENSION INDICATOR GAPS COMPLY WITH ASTM F 959, TABLE 2. b. VERIFY THAT TWIST-OFF-TYPE TENSION-CONTROL ASSEMBLIES HAVE BEEN PROPERLY TIGHTENED. 5. PERFORM PERIODIC INSPECTION OF BEARING TYPE CONNECTIONS. 6. PERFORM CONTINUOUS INSPECTION OF SLIP-CRITICAL TYPE CONNECTIONS.	PERIODIC, U.N.O.	CWI, SSSI, SWSI
	TEST AND INSPECT BLIND EXPANSION BOLTED CONNECTIONS AS FOLLOWS: 1. VERIFY BLIND EXPANSION BOLTS ARE CORRECT TYPE, DIAMETER, AND LENGTH FOR THE JOINT DETAIL. 2. VERIFY THAT CONNECTING ELEMENTS MEET REQUIREMENTS FOR HOLE SIZING. 3. PERIODICALLY VERIFY INSTALLED TORQUE OF 100% OF ALL BLIND EXPANSION BOLTS WITH A CALIBRATED TORQUE WRENCH. COORDINATE MINIMUM INSTALLED TORQUE WITH MANUFACTURER OF BLIND EXPANSION BOLTS INSTALLED.	PERIODIC	SWSI
	INSPECT AND TEST WELDS DURING FABRICATION (WHERE APPLICABLE) AND ERECTION OF STRUCTURAL STEEL, STEEL DECK, AND STUDS/ANCHORS AS FOLLOWS:		
	1. CERTIFY WELDERS AND CONDUCT INSPECTIONS AND TESTS AS REQUIRED. RECORD TYPES AND LOCATIONS OF DEFECTS FOUND IN WORK. RECORD WORK REQUIRED AND PERFORMED TO CORRECT DEFICIENCIES. a. CONFIRM THAT WELDING PROCEDURE SPECIFICATIONS ARE AVAILABLE. b. CONFIRM THAT CONTRACTOR HAS INSTITUTED A *WELDER IDENTIFICATION SYSTEM*.	PERIODIC	CWI, SWSI
	2. INSPECT WELD PROCEDURES AND WELDERS ACCORDING TO THE REQUIREMENTS OF AWS D1.1 AND AISC 360. a. CONFIRM THAT THERE IS NO WELDING OVER CRACKED TACK WELDS. b. CONFIRM THAT ENVIRONMENTAL CONDITIONS ARE BEING PROPERLY CONSIDERED (WIND SPEED, PRECIPITATION, AND TEMPERATURE). c. CONFIRM THAT WELDING PROCEDURE SPECIFICATIONS ARE BEING FOLLOWED (EQUIPMENT SETTINGS, TRAVEL SPEED, MATERIAL USEAGE, SHIELDING TYPE AND FLOW RATE, PREHEATING REQUIREMENTS, MAINTENANCE OF INTERPASS TEMPERATURE, AND PROPER WELDER POSITIONING). d. CONFIRM WELDING TECHNIQUES (INTERPASS AND FINAL CLEANING, EACH PASS WITHIN PROFILE LIMITATIONS, AND THAT EACH PASS MEETS QUALITY REQUIREMENTS).	PERIODIC	CWI, SWSI
	3. USE NON-DESTRUCTIVE TESTING ACCORDING TO AWS D1.1 ON ALL WELDS THAT APPEAR TO HAVE EXCESSIVE INCLUSIONS, POROSITIES, CRACKS, AND INCOMPLETE PENETRATIONS AS DESCRIBED BY AWS D1.1 OR HAVE THE QUESTIONABLE WELD REMOVED AND REWELDED.	PERIODIC	AWS-UT-2
	4. PERFORM OBSERVATION ON THE FIRST TWO WELDS INSTALLED BY EACH WELDER AND SUBSEQUENT NON-DESTRUCTIVE TESTING ACCORDING TO AWS D1.1 ON ALL (100%) COMPLETE PENETRATION AND/OR PARTIAL PENETRATION GROOVE WELDS AND ON ALL SPLICES OF MAIN MEMBERS WHERE THOSE SPLICES ARE REQUIRED. a. CONFIRM JOINT PREPARATION. b. CONFIRM DIMENSIONS (ALIGNMENT, ROOT OPENING, ROOT FACE, AND BEVEL). c. CONFIRM CLEANLINESS OF WELDS AND BASE MATERIAL (CONDITION OF STEEL SURFACES). d. CONFIRM TACKING (TACK WELD QUALITY AND LOCATION). e. CONFIRM BACKING TYPE AND FIT (AS APPLICABLE) AND REMOVAL SUBSEQUENT TO WELD PLACEMENT. f. PERFORM ULTRASONIC TESTING IN ACCORDANCE WITH AWS D.1.1 FOR STEEL MATERIAL 5/16" THICK AND GREATER. FOR THINNER MATERIAL, PERFORM VISUAL OBSERVATIONS IN ACCORDANCE WITH AWS D1.1.	CONTINUOUS	CWI, SWSI
	5. PERFORM INSPECTION ACCORDING TO AWS D1.1 (VISUAL INSPECTION) ON ALL MULTI-PASS FILLET WELDS AND ON ALL SINGLE-PASS FILLET WELDS LARGER THAN 5/16". a. CONFIRM DIMENSIONS (ALIGNMENT, GAPS AT ROOT, ROOT SIZE, LENGTH), SPACING, ORIENTATION, AND LOCATIONS. b. CONFIRM CLEANLINESS OF WELDS AND BASE MATERIAL (CONDITION OF STEEL SURFACES). c. CONFIRM TACKING (TACK WELD QUALITY AND LOCATION). d. CONFIRM VISUAL ACCEPTANCE CRITERIA (CRACK PROHIBITION, WELD/BASE FUSION, CRATER CROSS SECTION, WELD PROFILES, WELD SIZE, UNDERCUT, AND POROSITY).	CONTINUOUS	CWI, SWSI
	6. PERFORM INSPECTION ACCORDING TO AWS D1.1 (VISUAL INSPECTION) ON ALL SINGLE-PASS FILLET WELDS 5/16" AND SMALLER AND ON ALL FLOOR, FORM, AND ROOF DECK WELDS. a. CONFIRM DIMENSIONS (ALIGNMENT, GAPS AT ROOT, ROOT SIZE, LENGTH), SPACING, ORIENTATION, AND LOCATIONS. b. CONFIRM CLEANLINESS OF WELDS AND BASE MATERIAL (CONDITION OF STEEL SURFACES). c. CONFIRM TACKING (TACK WELD QUALITY AND LOCATION). d. CONFIRM VISUAL ACCEPTANCE CRITERIA (CRACK PROHIBITION, WELD/BASE FUSION, CRATER CROSS SECTION, WELD PROFILES, WELD SIZE, UNDERCUT, AND POROSITY).	PERIODIC	CWI, SWSI
	7. OBSERVE AND DOCUMENT REPAIR ACTIVITIES.	PERIODIC	CWI, SWSI
	INSPECT ALL MECHANICAL FASTENING OF FLOOR, FORM, AND ROOF DECK. VERIFY FASTENER TYPE, LENGTH, AND DIAMETER. CONFIRM PERIMETER AND INTERMEDIATE FASTENER SPACING.	PERIODIC	CWI, SWSI
	IN ADDITION TO VISUAL INSPECTION, INSPECT AND TEST FIELD WELDED SHEAR CONNECTORS ACCORDING TO REQUIREMENTS OF AWS D1.1 AND AS FOLLOWS: 1. VERIFY NUMBER, LOCATION, AND APPLICATION OF ALL WELD SHEAR CONNECTORS. 2. PERFORM BEND TESTS ON A MINIMUM OF 10 PERCENT OF ALL SHEAR CONNECTORS AND WHEN VISUAL INSPECTIONS REVEAL EITHER LESS THAN A CONTINUOUS 360-DEGREE FLASH OR WELDING REPAIRS TO ANY SHEAR CONNECTOR. 3. CONDUCT TESTS ON ADDITIONAL SHEAR CONNECTORS WHEN WELD FRACTURE OCCURS ON SHEAR CONNECTORS ALREADY TESTED, ACCORDING TO REQUIREMENTS OF AWS D1.1.	PERIODIC	CWI, SWSI
	INSPECT ALL STEEL FRAME CONNECTION DETAILS FOR COMPLIANCE WITH APPROVED CONSTRUCTION DOCUMENTS AND APPROVED STEEL ERECTION SHOP DRAWINGS. 1. VERIFY COMPLETENESS AND CONSTRUCTION OF ALL BRACING, STIFFENING, AND CONNECTIONS. 2. VERIFY LOCATION, COMPLETENESS, ACCURACY, AND JOINT DETAILS OF ALL MEMBERS.	PERIODIC	PE

COMPONENT	TEST OR SPECIAL INSPECTION	PERIODIC OR CONTINUOUS	ACCEPTABLE QUALIFICATIONS
COLD-FORMED STEEL (STRUCTURAL) CONSTRUCTION	PROVIDE SPECIAL INSPECTION OF THE FABRICATION OF LIGHT-GAUGE, COLD-FORMED METAL STRUCTURAL ELEMENTS AND ASSEMBLIES IN ACCORDANCE WITH THE FABRICATORS SECTION IN THIS CHART.	- - - -	
	VERIFY USE OF PROPER METAL GAUGE AND YIELD STRENGTH OF COLD-FORMED METAL PRODUCTS. VERIFY PROPER SCREW SIZE AND PENETRATION.	PERIODIC	SSSI, PE
	PERFORM INSPECTION OF LIGHT-GAUGE, COLD-FORMED METAL CONSTRUCTION TO VERIFY INSTALLATION OF BLOCKING, FASTENERS, AND FASTENING WITH THE CONTRACT DOCUMENT PROVISIONS.	PERIODIC	SSSI, PE
	PERFORM INSPECTION OF SHEAR WALL, SHEET DIAPHRAGMS, AND STRAP BRACING. 1. VERIFY GRADE AND THICKNESS OF SHEAR PANELS. 2. VERIFY THE SIZE AND QUANTITY OF FRAMING MEMBERS AT PANEL EDGES. 3. VERIFY SCREW DIAMETER, LENGTH, AND SPACING. 4. VERIFY INSTALLATION OF SHEAR WALL HOLD-DOWN ANCHORS.	PERIODIC	SSSI, PE
	VERIFY THE INSTALLATION OF ALL PERMANENT BRACING OF LIGHT-GAUGE, COLD-FORMED METAL TRUSS ASSEMBLIES IN ACCORDANCE WITH THE APPROVED TRUSS SHOP DRAWINGS AND STRUCTURAL DRAWINGS. 1. VERIFY PLACEMENT OF ALL COMPRESSION WEB MEMBER BRACING, LAPS, FASTENING, AND INTERMITTENT CROSS BRACING. 2. VERIFY PLACEMENT OF ALL CHORD BRACING, LAPS, FASTENING, AND INTERMITTENT CROSS BRACING. 3. VERIFY CONNECTION OF ALL TRUSS TO TRUSS GIRDER CONNECTIONS. 4. VERIFY INSTALLATION OF ALL PERIMETER UPLIFT CONNECTIONS TO SUPPORTING STRUCTURE.	PERIODIC	SSSI, PE
STRUCTURAL ANCHORS	WHERE PERIODIC ANCHOR INSPECTION IS PERMITTED, THE SPECIAL INSPECTOR SHALL VERIFY THE INITIAL INSTALLATIONS OF EACH TYPE AND SIZE OF ANCHOR BY CONSTRUCTION PERSONNEL ON SITE. SUBSEQUENT INSTALLATIONS OF THE SAME ANCHOR TYPE AND SIZE BY THE SAME CONSTRUCTION PERSONNEL ARE PERMITTED TO BE PERFORMED IN THE ABSENCE OF THE SPECIAL INSPECTOR. FOR ONGOING INSTALLATIONS OVER AN EXTENDED PERIOD, GREATER THAN THREE MONTHS, THE SPECIAL INSPECTOR MUST MAKE REGULAR INSPECTIONS TO CONFIRM CORRECT HANDLING AND INSTALLATION OF THE ANCHORS.	- - - -	
	INSPECT INSTALLATION OF ALL ADHESIVE ANCHORS THAT RESIST SUSTAINED TENSION LOADS IN HORIZONTAL OR UPWARDLY-INCLINED ORIENTATIONS.	CONTINUOUS	RCSI, SMSI
	ADDITIONAL TO REQUIREMENTS LISTED BELOW, INSPECT ALL POST-INSTALLED ANCHORS AS FOLLOWS: VERIFY ANCHOR TYPE, ANCHOR DIMENSIONS, HOLE CLEANING PROCEDURE, EMBEDMENT DEPTH, SUBSTRATE TYPE (MATERIAL), SUBSTRATE THICKNESS, DRILL BIT TYPE AND SIZE, HOLE DIMENSIONS, ANCHOR SPACING, MINIMUM EDGE DISTANCE, ANCHOR PLUMBNESS (RELATIVE TO HORIZONTAL OR VERTICAL AS APPLICABLE), AND ADHERENCE TO THE ANCHOR MANUFACTURER'S PUBLISHED INSTALLATION INSTRUCTIONS.	PERIODIC	RCSI, SMSI
	INSPECT DRILLED-IN ADHESIVE TYPE ANCHORS AS FOLLOWS: VERIFY ADHESIVE PRODUCT AND EXPIRATION DATE, PROOF LOAD 25% OF EACH TYPE AND SIZE OF ANCHOR IN ACCORDANCE WITH RECOMMENDATIONS OF THE ANCHOR MANUFACTURER. ADHESIVE ANCHORS AND CAPSULE ANCHORS SHALL NOT BE TORQUE TESTED UNLESS OTHERWISE DIRECTED BY THE ENGINEER. IF MORE THAN 10% OF THE TESTED ANCHORS FAIL TO ACHIEVE THE SPECIFIED TORQUE OR PROOF LOAD WITHIN THE LIMITS AS DEFINED IN THE SPECIFICATIONS, ALL ANCHORS OF THE SAME DIAMETER AND TYPE AS THE FAILED ANCHOR SHALL BE TESTED, UNLESS OTHERWISE INSTRUCTED BY THE ENGINEER. 1. PROOF LOADS SHALL BE APPLIED WITH A CALIBRATED HYDRAULIC RAM. DISPLACEMENT OF ADHESIVE AND CAPSULE ANCHORS AT PROOF LOAD SHALL NOT EXCEED D/10, WHERE D IS THE NOMINAL ANCHOR DIAMETER.	PERIODIC	RCSI, SMSI
	INSPECT 100% OF EXPANSION TYPE MECHANICAL ANCHORS AS FOLLOWS: VERIFY INSTALLED TORQUE OF ANCHORS WITH A CALIBRATED TORQUE WRENCH. COORDINATE MINIMUM INSTALLED TORQUE WITH MANUFACTURER OF ANCHORS INSTALLED.	PERIODIC	RCSI, SMSI
	INSPECT 100% OF CONCRETE AND MASONRY SCREW TYPE ANCHORS AS FOLLOWS: VERIFY INSTALLATION TORQUE (DO NOT EXCEED ANCHOR MANUFACTURER PUBLISHED MAXIMUM INSTALLATION TORQUE), MAXIMUM IMPACT WRENCH TORQUE RATING, AND ANCHOR TIGHTNESS TO SUPPORTED COMPONENT.	PERIODIC	RCSI, SMSI

- - - -

COMPONENT	TEST OR SPECIAL INSPECTION	PERIODIC OR CONTINUOUS	ACCEPTABLE QUALIFICATIONS
CONCRETE CONSTRUCTION (IBC 1705.3)	PROVIDE SPECIAL INSPECTION OF THE FABRICATION OF CONCRETE STRUCTURAL ELEMENTS AND ASSEMBLIES IN ACCORDANCE WITH THE FABRICATORS SECTION IN THIS CHART	- - - -	
	VERIFY THE USE OF THE PROPER DESIGN MIX.	PERIODIC	RCSI, ACI-2, NICET-2C
	VERIFY USE OF PROPER GRADE AND ASTM DESIGNATION OF REINFORCING STEEL.	PERIODIC	RCSI, ACI-2, NICET-2C
	PERFORM INSPECTION ON PLACEMENT, SPACING, CLEAR COVER, NUMBER, AND SPLICE LAP LENGTHS OF REINFORCING STEEL.	PERIODIC	RCSI, NICET-2C
	MONITOR CONCRETE QUALITY BY MEANS OF SITE AND LABORATORY TESTS. THE INSPECTION AGENCY IS AUTHORIZED TO REJECT PLASTIC CONCRETE NOT CONFORMING TO SPECIFICATIONS. IMMEDIATELY INFORM THE CONTRACTOR, THE ARCHITECT AND THE STRUCTURAL ENGINEER OF INADEQUACIES IN CONCRETE QUALITY. SAMPLING AND TESTING FOR QUALITY CONTROL DURING CONCRETE PLACEMENT SHALL INCLUDE THE FOLLOWING: 1. TESTING OF COMPOSITE SAMPLES OF FRESH CONCRETE OBTAINED ACCORDING TO ASTM C 172 SHALL BE PERFORMED ACCORDING TO THE FOLLOWING REQUIREMENTS: a. TESTING FREQUENCY: OBTAIN ONE COMPOSITE SAMPLE FOR EACH DAY'S POUR OF EACH CONCRETE MIXTURE EXCEEDING 5 CU. YD., BUT LESS THAN 25 CU. YD., PLUS ONE SET FOR EACH ADDITIONAL 50 CU. YD. OR FRACTION THEREOF. b. SLUMP: ASTM C 143; ONE TEST AT POINT OF PLACEMENT FOR EACH COMPOSITE SAMPLE, BUT NOT LESS THAN ONE TEST FOR EACH DAY'S POUR OF EACH CONCRETE MIXTURE. PERFORM ADDITIONAL TESTS WHEN CONCRETE CONSISTENCY APPEARS TO CHANGE. **c.** AIR CONTENT: ASTM C 231, PRESSURE METHOD, FOR NORMAL-WEIGHT CONCRETE; ONE TEST FOR EACH COMPOSITE SAMPLE, BUT NOT LESS THAN ONE TEST FOR EACH DAY'S POUR OF EACH CONCRETE MIXTURE. **d.** CONCRETE TEMPERATURE: ASTM C 1064; ONE TEST HOURLY WHEN AIR TEMPERATURE IS 40 DEG F AND BELOW OR 80 DEG F AND ABOVE, AND ONE TEST FOR EACH SET OF COMPOSITE SAMPLE. e. COMPRESSION TEST SPECIMEN: ASTM C 31; ONE SET OF FOUR STANDARD 6" DIAMETER BY 12" OR FIVE STANDARD 4" DIAMETER BY 8" CYLINDERS FOR EACH COMPRESSIVE-STRENGTH TEST, UNLESS OTHERWISE DIRECTED. MOLD AND STORE CYLINDERS FOR LABORATORY-CURED TEST SPECIMENS EXCEPT WHEN FIELD-CURED TEST SPECIMENS ARE REQUIRED. f. COMPRESSIVE-STRENGTH TESTS: ASTM C 39; TEST ONE SPECIMEN AT 7 DAYS, TWO 6"x12" OR THREE 4"x8" SPECIMENS TESTED AT 28 DAYS, AND ONE SPECIMEN RETAINED IN RESERVE FOR LATER TESTING IF REQUIRED. ADDITIONAL CYLINDER TESTS (SUCH AS AT 14 DAYS) FOR CONTRACTOR CONVENIENCE AND SCHEDULING SHALL BE PAID FOR BY THE CONTRACTOR. A COMPRESSIVE-STRENGTH TEST SHALL BE THE AVERAGE COMPRESSIVE STRENGTH FROM A SET OF SPECIFIED NUMBER SPECIMENS OBTAINED FROM SAME COMPOSITE SAMPLE AND TESTED AT AGE INDICATED. g. WHEN FREQUENCY OF TESTING WILL PROVIDE FEWER THAN FIVE STRENGTH TESTS FOR A GIVEN CLASS OF CONCRETE, CONDUCT TESTING FROM AT LEAST FIVE RANDOMLY SELECTED BATCHES OR FROM EACH BATCH IF FEWER THAN FIVE ARE USED. h. WHEN STRENGTH OF FIELD-CURED CYLINDERS IS LESS THAN 85 PERCENT OF COMPANION LABORATORY-CURED CYLINDERS, CONTRACTOR SHALL EVALUATE OPERATIONS AND PROVIDE CORRECTIVE PROCEDURES FOR PROTECTING AND CURING THE IN-PLACE CONCRETE. i. STRENGTH OF EACH CONCRETE MIXTURE WILL BE SATISFACTORY IF EVERY AVERAGE OF ANY THREE CONSECUTIVE COMPRESSIVE-STRENGTH TESTS EQUALS OR EXCEEDS SPECIFIED COMPRESSIVE STRENGTH AND NO COMPRESSIVE-STRENGTH TEST VALUE FALLS BELOW SPECIFIED COMPRESSIVE STRENGTH BY MORE THAN 500 PSI. 2. TEST RESULTS SHALL BE REPORTED IN WRITING TO ARCHITECT, STRUCTURAL ENGINEER, READY-MIX PRODUCER, AND CONTRACTOR WITHIN 48 HOURS OF TESTING. REPORTS OF COMPRESSIVE-STRENGTH TESTS SHALL CONTAIN THE PROJECT IDENTIFICATION NAME AND NUMBER, DATE OF CONCRETE PLACEMENT, NAME OF CONCRETE TESTING AND INSPECTING AGENCY, CONCRETE TYPE AND CLASS, LOCATION OF CONCRETE BATCH IN STRUCTURE, DESIGN COMPRESSIVE STRENGTH AT 28 DAYS, CONCRETE MIXTURE PROPORTIONS AND MATERIALS, COMPRESSIVE BREAKING STRENGTH, AND TYPE OF BREAK FOR BOTH 7- AND 28-DAY TESTS.	CONTINUOUS	RCSI, ACI-2, NICET-1
	PERFORM INSPECTION OF CONCRETE PLACEMENT FOR WALLS, PIERS, AND FOOTINGS TO VERIFY PROPER APPLICATION TECHNIQUES.	CONTINUOUS	RCSI, ACI-2, NICET-1
	PERFORM INSPECTION OF CONCRETE PLACEMENT FOR SLAB ON GRADE TO VERIFY PROPER APPLICATION.	PERIODIC	RCSI, ACI-2, NICET-1
	PERFORM INSPECTION OF CONCRETE CURING PROCEDURES TO VERIFY MAINTENANCE OF SPECIFIED CURING TEMPERATURE, PROTECTION, AND TECHNIQUES.	PERIODIC	RCSI, ACI-2, NICET-1
	TEST THE F-NUMBER TOLERANCES OF CONCRETE SLABS IN ACCORDANCE WITH THE PROVISIONS SET FORTH BY ASTM COMMITTEE E6.21.10. ALL TESTS SHALL BE PERFORMED WITHIN THREE WORKING DAYS AFTER CONCRETE PLACEMENT AND PRIOR TO ANY FORM REMOVAL. 1. SLABS SHALL BE TESTED FOR F-NUMBER TOLERANCES AT GYM, CAFETERIA, ALL CORRIDORS, AND TWO OUT OF EVERY TEN CLASSROOMS. CLASSROOMS TESTED SHALL BE SPACED EVENLY THROUGHOUT THE BUILDING. QUANTITY OF TEST READINGS FOR EACH AREA SHALL BE PER ASTM E1155. a. TEST ONE ADDITIONAL CLASSROOM FOR EACH CLASSROOM NOT WITHIN SPECIFIED F-NUMBER TOLERANCES. 2. SLAB AREAS SHALL BE TESTED FOR F-NUMBER TOLERANCES FOR THE FIRST 10,000 SQUARE FEET PLACED AT EACH LEVEL. THEREAFTER, TEST AN ADDITIONAL 1,000 SQUARE FEET PER 10,000 SQUARE FEET OF SLAB AREA AT EACH LEVEL. QUANTITY OF TEST READINGS FOR EACH AREA SHALL BE PER ASTM E1155.	PERIODIC	RCSI, ACI-2, NICET-1
	NONDESTRUCTIVE TESTING: IMPACT HAMMER, SONOSCOPE, OR OTHER NONDESTRUCTIVE DEVICE MAY BE PERMITTED BUT SHALL NOT BE USED AS THE SOLE BASIS FOR ACCEPTANCE OR REJECTION.	- - - -	
	ADDITIONAL TESTS: TESTING AND INSPECTING AGENCY SHALL MAKE ADDITIONAL TESTS OF CONCRETE WHEN TEST RESULTS INDICATE THAT SLUMP, AIR ENTRAINMENT, COMPRESSIVE STRENGTHS, OR OTHER REQUIREMENTS HAVE NOT BEEN MET, AS DIRECTED BY ARCHITECT. TESTING AND INSPECTING AGENCY MAY CONDUCT TESTS TO DETERMINE ADEQUACY OF CONCRETE BY CORED CYLINDERS COMPLYING WITH ASTM C 42 OR BY OTHER METHODS AS DIRECTED BY ARCHITECT. 1. ADDITIONAL TESTING AND INSPECTING, AT CONTRACTOR'S EXPENSE, WILL BE PERFORMED TO DETERMINE COMPLIANCE OF REPLACED OR ADDITIONAL WORK WITH SPECIFIED REQUIREMENTS.	- - - -	
SOILS (IBC 1705.6)	INSPECT THE EXISTING SITE SOIL CONDITIONS, FILL PLACEMENT, AND LOAD-BEARING REQUIREMENTS FOR COMPLIANCE WITH THE RECOMMENDATIONS OF THE APPROVED GEOTECHNICAL INVESTIGATION REPORT.	PERIODIC	SSI, NICET-2S
	WHERE THE SITE IS SPECIFIED TO BE UNDERCUT BY THE GEOTECHNICAL INVESTIGATION REPORT, VERIFY ALL UNSUITABLE SOILS, DEBRIS, ROCK AND OTHER MATERIALS HAVE BEEN REMOVED FROM BELOW BUILDING FOOTPRINT. 1. VERIFY THAT TOPSOIL HAS BEEN STRIPPED AND REMOVED FROM BUILDING FOOTPRINT. 2. VERIFY ALL EXISTING UNCONTROLLED FILLS, SOFT AND UNSUITABLE SOILS HAVE BEEN REMOVED FROM BELOW APPLICABLE FOUNDATION ELEMENTS. TEST NATIVE MATERIAL AT BASE OF CUT TO ENSURE THAT UNSUITABLE MATERIAL HAS BEEN COMPLETELY REMOVED; NOTIFY ARCHITECT IF UNACCEPTABLE MATERIAL REMAINS AFTER COMPLETION OF SPECIFIED UNDERCUT. 3. FOR SOIL BEARING FOUNDATIONS, VERIFY THAT EXPANSIVE CLAYS AND BEDROCK HAVE BEEN COMPLETELY REMOVED TO ALLOW SUFFICIENT SOIL CUSHION DEPTH AS SPECIFIED. 4. AT FOUNDATIONS BEARING ON EXISTING FILL OR SHALE SOILS, PERFORM DYNAMIC CONE PENETROMETER TESTING AT EACH SPREAD FOOTING WHEN FOUNDATION EXCAVATION IS COMPLETE TO ENSURE BEARING CAPACITY IS WITHIN THE RECOMMENDED NET ALLOWABLE.	PERIODIC	SSI, NICET-2S
	OBSERVE PROOFROLLING OF THE BUILDING PAD AREAS PRIOR TO COMMENCEMENT OF FILL/SUBBASE PLACEMENT, AND DURING FILL PLACEMENT (IF REQUIRED).	PERIODIC	SSI, NICET-2S
	PRIOR TO PLACEMENT OF ANY ENGINEERED FILL, DETERMINE THAT THE SITE HAS BEEN PREPARED IN ACCORDANCE WITH THE RECOMMENDATIONS OF THE APPROVED GEOTECHNICAL INVESTIGATION REPORT. 1. TEST SAMPLES FROM PROPOSED BORROW ON- AND OFF- SITE SOURCES OF FILL FOR COMPLIANCE WITH THE APPROVED MATERIALS LISTING AND OTHER REQUIREMENTS OF THE GEOTECHNICAL REPORT AND THE SPECIFICATIONS. CLAY SOILS SHALL BE CHECKED FOR ACCEPTABLE PLASTICITY INDEX PRIOR TO MOVING ON SITE. MAXIMUM ORGANIC CONTENT SHALL BE VERIFIED BY INSPECTION OR TEST TO BE BELOW ACCEPTABLE LIMITS.	PERIODIC	SSI, NICET-2S
	DURING PLACEMENT AND COMPACTION OF THE ENGINEERED FILL MATERIAL, VERIFY THAT THE MATERIAL BEING USED, MAXIMUM LIFT THICKNESS, AND IN-PLACE DRY DENSITY COMPLY WITH THE RECOMMENDATIONS OF THE APPROVED GEOTECHNICAL REPORT. 1. SOIL FILLS SHALL BE EXEMPT FROM SPECIAL INSPECTION WHEN TOTAL FILL PLACEMENT IS LESS THAN 12 INCHES DEEP. 2. TESTING AGENCY TO INSPECT AND TEST SUBGRADES AND EACH FILL OR BACKFILL LAYER.	CONTINUOUS	SSI, NICET-2S
	FOOTING SUBGRADE: AT FOOTING SUBGRADES, AT LEAST ONE TEST OF EACH SOIL STRATUM SHALL BE PERFORMED TO VERIFY DESIGN BEARING CAPACITIES. SUBSEQUENT VERIFICATION AND APPROVAL OF OTHER FOOTING SUBGRADES MAY BE BASED ON A VISUAL COMPARISON OF SUBGRADE WITH TESTED SUBGRADE WHEN APPROVED BY ARCHITECT.	PERIODIC	SSI, NICET-2S
	TESTING AGENCY WILL TEST COMPACTION OF SOILS IN PLACE ACCORDING TO ASTM D 1556, ASTM D 2167, ASTM D 6938, AND ASTM D 2937, AS APPLICABLE. TESTS SHALL BE PERFORMED AT THE FOLLOWING LOCATIONS AND FREQUENCIES: 1. BUILDING SLAB AREAS: AT SUBGRADE AND AT EACH COMPACTED FILL AND BACKFILL LAYER, AT LEAST 1 TEST FOR EVERY 2000 SQ. FT. OR LESS OF BUILDING SLAB, BUT IN NO CASE FEWER THAN 3 TESTS. 2. FOUNDATION WALL BACKFILL: AT EACH COMPACTED BACKFILL LAYER, AT LEAST 1 TEST FOR EACH 100 FEET OR LESS OF WALL LENGTH, BUT NO FEWER THAN 2 TESTS.	PERIODIC	SSI, NICET-2S

ENGINEER NOTE:
DO NOT USE BOTH OPTIONS (1 & 2). USE ONLY ONE OPTION TO DESCRIBE THE AREA TO BE TESTED.
IF OPTION 1 IS USED, ADJUST ROOM NAMES TO MATCH YOUR PROJECT (ENSURE NAMES USED MATCH THOSE USED IN THE ARCHITECTURAL DRAWINGS)

NOTES ON SPECIAL INSPECTIONS CHART:
1. REFER TO 014110 SPECIFICATION FOR ADDITIONAL REQUIREMENTS AND RESPONSIBILITIES.
2. SPECIAL INSPECTIONS AS DEFINED IN SECTIONS 1704 AND 1705 OF THE KENTUCKY BUILDING CODE ARE REQUIRED. ALL REFERENCES SHOWN ARE TO THE KBC 2018 / IBC 2015.
3. SPECIAL INSPECTIONS SHALL BE PERFORMED BY A QUALIFIED TESTING AGENCY APPROVED BY THE ARCHITECT AND THE STRUCTURAL ENGINEER AND PAID FOR BY THE OWNER.
4. THE INSPECTOR SHALL OBSERVE WORK FOR CONFORMANCE WITH THE APPROVED STRUCTURAL DRAWINGS AND SPECIFICATIONS AND PREPARE INSPECTION REPORTS STATING HIS/HER OBSERVATIONS. COPIES OF THE INSPECTION REPORTS SHALL BE SUBMITTED TO THE CONTRACTOR, THE ARCHITECT AND THE STRUCTURAL ENGINEER.
5. ALL DISCREPANCIES BETWEEN THE CONSTRUCTION DOCUMENTS AND THE WORK BEING PERFORMED SHALL BE BROUGHT TO THE IMMEDIATE ATTENTION OF THE CONTRACTOR FOR CORRECTION. IF THE DISCREPANCIES ARE NOT CORRECTED, THE DISCREPANCIES SHALL BE BROUGHT TO THE ATTENTION OF ARCHITECT AND THE STRUCTURAL ENGINEER PRIOR TO THE COMPLETION OF THAT PHASE OF THE WORK.
6. THE SPECIAL INSPECTOR SHALL SUBMIT A FINAL REPORT OF INSPECTIONS DOCUMENTING COMPLETION OF ALL REQUIRED SPECIAL INSPECTIONS AND CORRECTION OF ANY DISCREPANCIES NOTED IN THE INSPECTIONS.

DESIGNATION	REQUIRED CERTIFICATION
ACI-2	ACI CERTIFIED CONCRETE FIELD TESTING TECHNICIAN LEVEL 2, PLUS 2-YEARS' RELATED EXPERIENCE
AWS-1	AWS LEVEL 1
AWS-UT-2	AWS ULTRAGRAPHIC TESTING LEVEL II IN ACCORDANCE WITH CURRENT ASNT-TC-1A STANDARDS
CWI	AWS CERTIFIED WELD INSPECTOR
NICET-1	NICET LEVEL 1, MINIMUM 2-YEARS' RELATED EXPERIENCE
NICET-2C	CURRENT NICET CONCRETE LEVEL II CERTIFICATION PLUS 4-YEARS' RELATED EXPERIENCE
NICET-2S	CURRENT NICET SOILS LEVEL II CERTIFICATION PLUS 4-YEARS' RELATED EXPERIENCE
PE	PROFESSIONAL ENGINEER WITH MINIMUM OF 8-YEARS' EXPERIENCE, LICENSED IN THE PROJECT STATE, WHOSE PRINCIPAL WORK EXPERIENCE HAS BEEN IN THE DESIGN OF BUILDING STRUCTURES
RCSI	ICC CERTIFIED REINFORCED CONCRETE SPECIAL INSPECTOR
SFSI	ICC CERTIFIED SPRAY-APPLIED FIREPROOFING SPECIAL INSPECTOR
SMSI	ICC CERTIFIED STRUCTURAL MASONRY SPECIAL INSPECTOR
SSI	ICC CERTIFIED SOILS SPECIAL INSPECTOR
SSSI	ICC CERTIFIED STRUCTURAL STEEL & BOLTING SPECIAL INSPECTOR
SWSI	ICC CERTIFIED STRUCTURAL WELDING SPECIAL INSPECTOR

JRA architects
3225 Summit Square Place, Suite 200
Lexington, Kentucky 40509
859.252.6781

NOT FOR CONSTRUCTION

BROWN+KUBICAN
STRUCTURAL ENGINEERS
546 East Main Street, Suite 300
Lexington, KY 40508
859-543-0933
www.brownkubican.com

RFP 2 DRAWINGS

UK INDOOR TRACK FACILITY
UNIVERSITY OF KENTUCKY
700 SPORTS CENTER DRIVE LEXINGTON, KENTUCKY 40506

STRUCTURAL

PROJECT	202258
DATE	08/31/2022

REVISIONS

No.	Description	Date

JRA ARCHITECTS HAS RETAINED AN ELECTRONIC VERSION OF THESE DRAWINGS. THE CLIENT AGREES NOT TO REUSE THESE DRAWINGS - IN ELECTRONIC OR ANY OTHER FORMAT - IN WHOLE, OR IN PART, FOR ANY PURPOSE OTHER THAN FOR THE PROJECT. THE CLIENT AGREES NOT TO TRANSFER THESE ELECTRONIC FILES TO OTHERS WITHOUT THE PRIOR WRITTEN CONSENT OF THE ARCHITECT. THE CLIENT FURTHER AGREES TO WAIVE ALL CLAIMS AGAINST THE ARCHITECT RESULTING IN ANY WAY FROM ANY UNAUTHORIZED CHANGES TO OR REUSE OF THE ELECTRONIC FILES FOR ANY OTHER PROJECT BY ANYONE OTHER THAN THE ARCHITECT.

SPECIAL INSPECTIONS

S-103

COPYRIGHT 2022 - JRA, INC.

8/26/2022 3:09:43 PM

C:_REVIT_Locals\22157 (UK INDOOR TRACK AND FIELD) (STR - RVT21_another)2BLBG.rvt

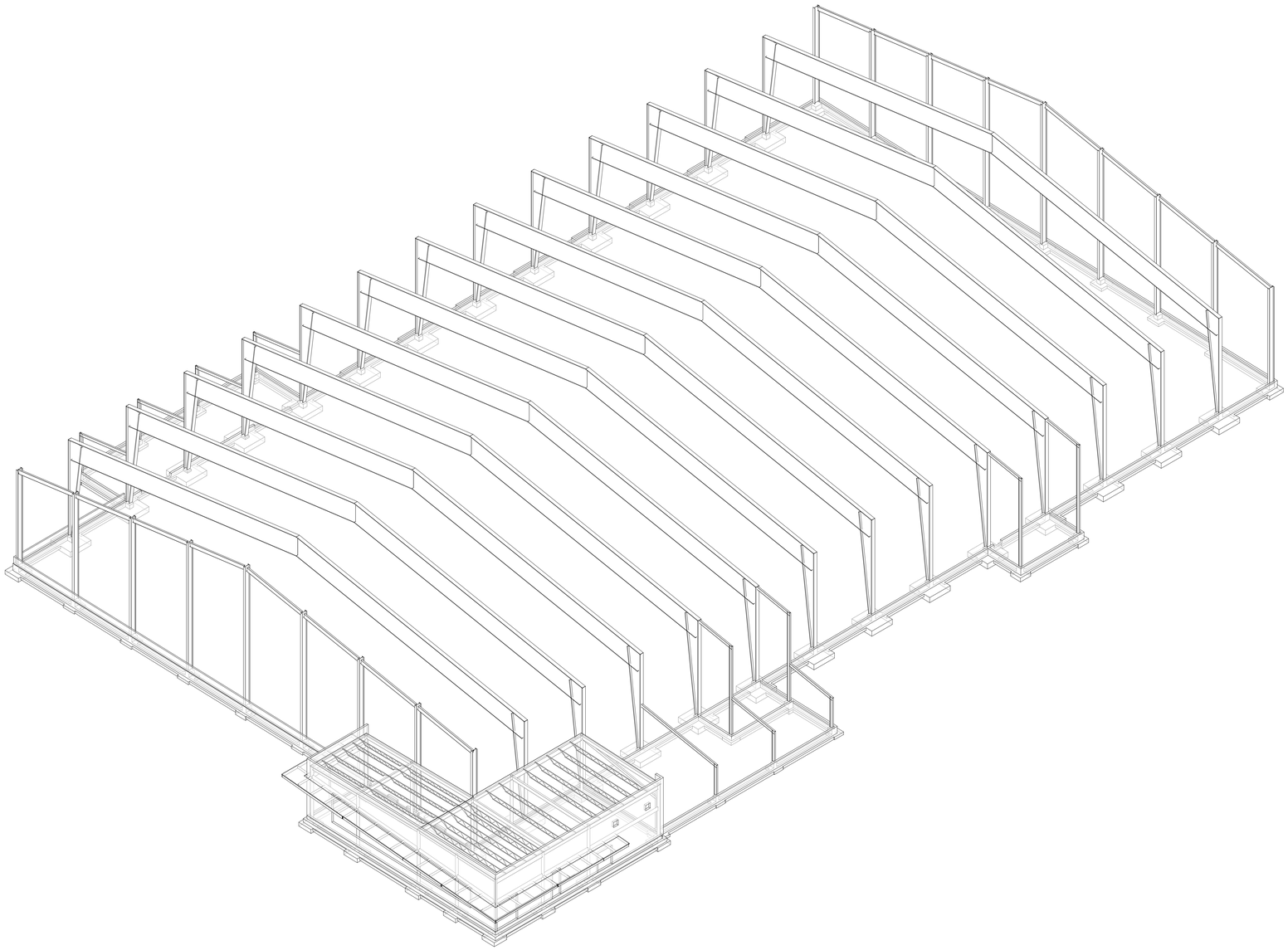

A
S-104
ISOMETRIC VIEW

NOTE:
3D VIEWS SHOWN ON THIS SHEET ARE FOR REFERENCE ONLY.
3D STRUCTURAL MODEL IS NOT GUARANTEED TO BE COMPLETE OR EXACT.
SEE ALL OTHER SHEETS FOR ACCURATE STRUCTURAL PLANS AND DETAILS.

8/26/2022 3:09:43 PM

JRA architects
3225 Summit Square Place, Suite 200
Lexington, Kentucky 40509
859.252.6781

NOT FOR CONSTRUCTION

BROWN+KUBICAN
STRUCTURAL ENGINEERS
546 East Main Street, Suite 300
Lexington, KY 40508
859-543-0933
www.brownkubican.com

RFP 2 DRAWINGS

UK INDOOR TRACK FACILITY

UNIVERSITY OF KENTUCKY
700 SPORTS CENTER DRIVE LEXINGTON, KENTUCKY 40506

STRUCTURAL

PROJECT	202258
DATE	08/31/2022

REVISIONS

No.	Description	Date

JRA ARCHITECTS HAS RETAINED AN ELECTRONIC VERSION OF THESE DRAWINGS. THE CLIENT AGREES NOT TO REUSE THESE DRAWINGS - IN ELECTRONIC OR ANY OTHER FORMAT - IN WHOLE, OR IN PART, FOR ANY PURPOSE OTHER THAN FOR THE PROJECT. THE CLIENT AGREES NOT TO TRANSFER THESE ELECTRONIC FILES TO OTHERS WITHOUT THE PRIOR WRITTEN CONSENT OF THE ARCHITECT. THE CLIENT FURTHER AGREES TO WAIVE ALL CLAIMS AGAINST THE ARCHITECT RESULTING IN ANY WAY FROM ANY CHANGES OR ADDITIONS TO OR REUSE OF THE ELECTRONIC FILES FOR ANY OTHER PROJECT BY ANYONE OTHER THAN THE ARCHITECT.

ISOMETRIC VIEWS

S-104

COPYRIGHT 2022 - JRA, INC.

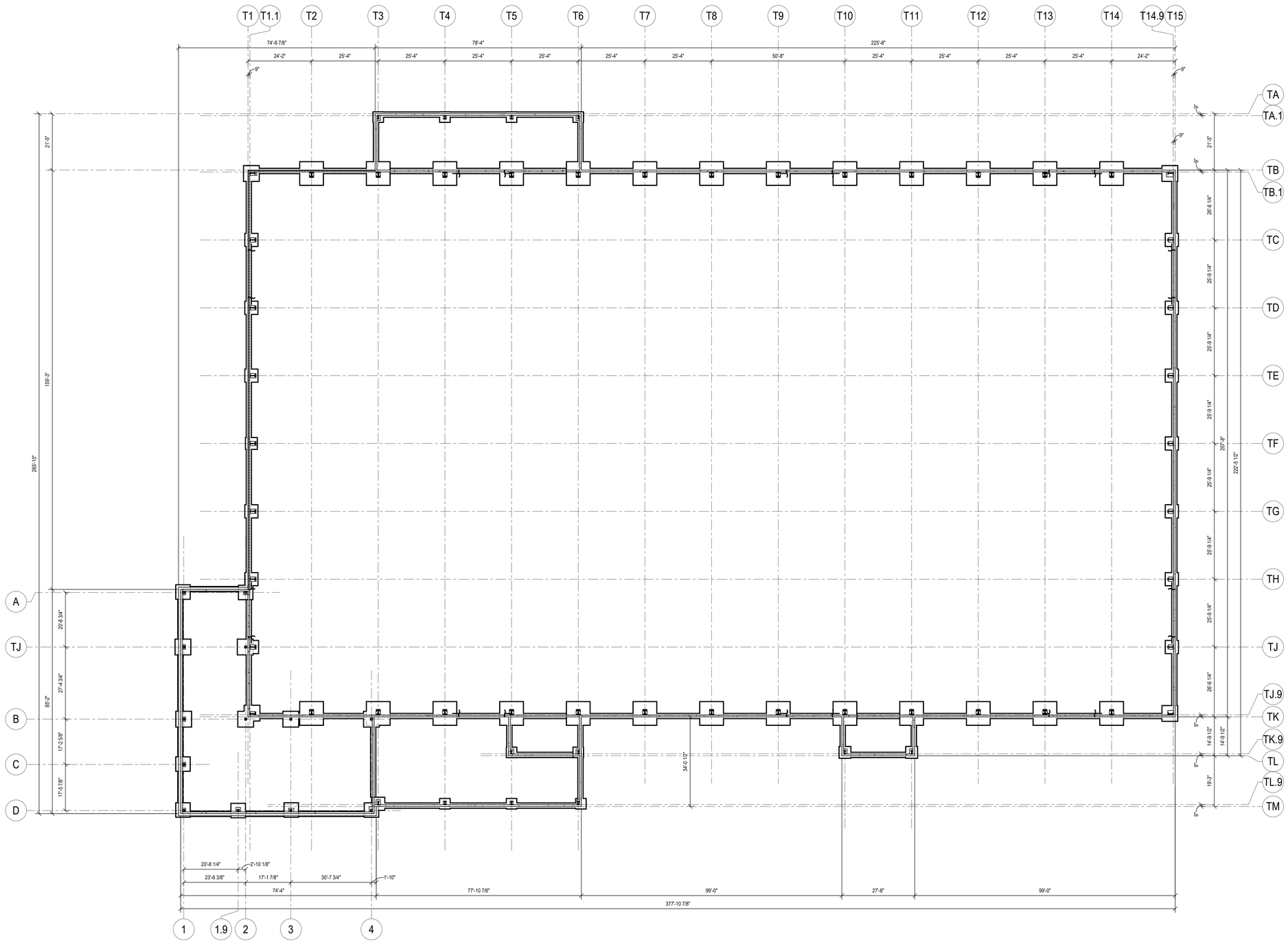

A S-203 OVERALL FOUNDATION PLAN

1/16" = 1'-0"

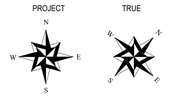

REFERENCE ELEVATION (0'-0") = 1006.1' SEA LEVEL

JRA architects
3225 Summit Square Place, Suite 200
Lexington, Kentucky 40509
859.252.6781

NOT FOR CONSTRUCTION

BROWN+KUBICAN
STRUCTURAL ENGINEERS
546 East Main Street, Suite 300
Lexington, KY 40508
859-543-0933
www.brownkubican.com

RFP 2 DRAWINGS

UK INDOOR TRACK FACILITY

UNIVERSITY OF KENTUCKY
700 SPORTS CENTER DRIVE LEXINGTON, KENTUCKY 40506

STRUCTURAL

PROJECT	202258
DATE	08/31/2022

REVISIONS

No.	Description	Date

JRA ARCHITECTS HAS RETAINED AN ELECTRONIC VERSION OF THESE DRAWINGS. THE CLIENT AGREES NOT TO REUSE THESE DRAWINGS - IN ELECTRONIC OR ANY OTHER FORMAT - IN WHOLE, OR IN PART, FOR ANY PURPOSE OTHER THAN FOR THE PROJECT. THE CLIENT AGREES NOT TO TRANSFER THESE ELECTRONIC FILES TO OTHERS WITHOUT THE PRIOR WRITTEN CONSENT OF THE ARCHITECT. THE CLIENT FURTHER AGREES TO WAIVE ALL CLAIMS AGAINST THE ARCHITECT RESULTING IN ANY WAY FROM ANY UNAUTHORIZED CHANGES TO OR REUSE OF THE ELECTRONIC FILES FOR ANY OTHER PROJECT BY ANYONE OTHER THAN THE ARCHITECT

OVERALL FOUNDATION PLAN

S-203

COPYRIGHT 2022 - JRA, INC.

C:_REVIT_Locals\22157 (UK INDOOR TRACK AND FIELD) STR - RVT21_another@BLBG.rvt
8/28/2022 3:09:44 PM

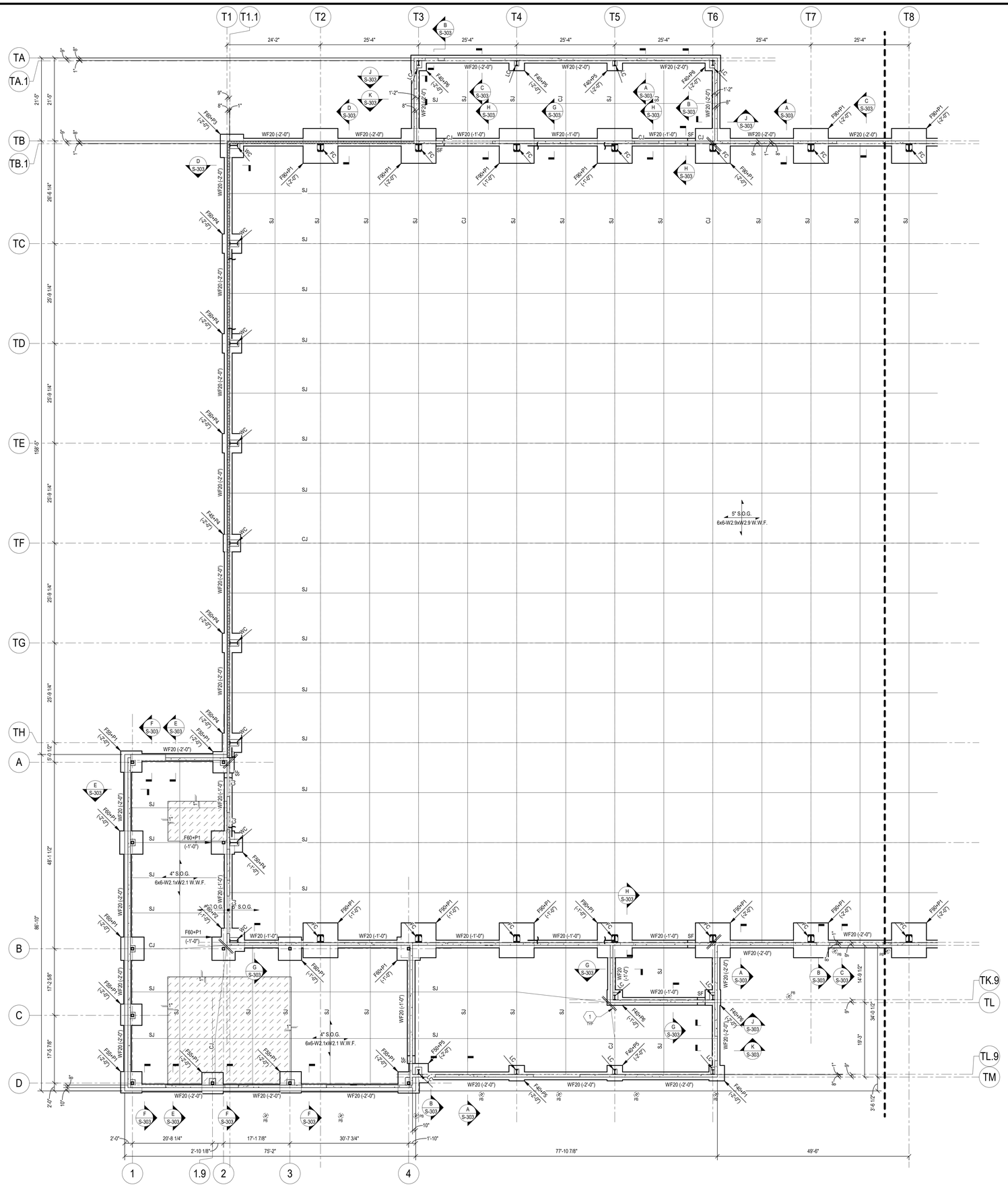

A S-204 FOUNDATION PLAN AREA A

3/32" = 1'-0"

FOUNDATION PLAN NOTES

1. ELEVATIONS SHOWN ARE TO THE TOP OF THE FOUNDATION AND ARE REFERENCED FROM FINISHED FIRST FLOOR REFERENCE ELEVATION (0'-0").
2. SEE DWG S-101 FOR GENERAL NOTES.
3. SEE DWG S-102 FOR SPECIAL INSPECTION NOTES.
4. SEE DWGS S-301 & S-302 FOR TYPICAL FOUNDATION DETAILS.
5. SEE DWG S-501 FOR COLUMN SCHEDULE.
6. SLAB ON GRADE SHALL BE PLACED ON VAPOR RETARDER (SEE SPECIFICATIONS) OVER 4" MINIMUM COMPACTED CRUSHED STONE OR DENSE GRADED AGGREGATE.
7. REINFORCE SLABS ON GRADE AT RE-ENTRANT CORNERS PER DETAIL H/S-301. REINFORCING BARS MAY NOT BE SHOWN GRAPHICALLY ON PLAN IN ALL LOCATIONS.

FOUNDATION LEGEND

F40	= SPREAD FOOTING. SEE SCHEDULE.
WF20	= WALL FOOTING. SEE SCHEDULE.
SF	= STEP FOOTING. SEE DETAIL C/S-301.
P1	= COLUMN PIER. SEE DETAIL B/S-302.
(-0'-8")	= TOP OF GRADE BEAM ELEVATION.
2"	= EXTENT OF SLAB DEPRESSION. DEPTH MEASURED FROM ADJACENT TOP OF CONCRETE.
SJ	= SAWN CONTRACTION JOINT. SEE DETAIL G/S-301.
CJ	= CONSTRUCTION JOINT. SEE DETAIL G/S-301.
	= DIAGONAL BRACING. SEE P.E.M.B. DRAWINGS FOR MORE INFORMATION.
	= C.M.U. WALL REINFORCED AS NOTED IN SECTION. REINFORCING CENTERED IN CORE.
	= CONCRETE WALL.
FC	= P.E.M.B. FRAME COLUMN. SEE P.E.M.B. DWGS.
WC	= P.E.M.B. WIND COLUMN. SEE P.E.M.B. DWGS.
LC	= P.E.M.B. LEAN-TO FRAME COLUMN. SEE P.E.M.B. DWGS.
PB	= PIPE BOLLARD. SEE DETAIL N/S-301.
TP	= THROWING AREA POST. SEE DETAIL N/S-301.

TAG NOTES

1. RE-ENTRANT CORNER SLAB ON GRADE REINFORCING. SEE DET H/S-301. NOT ALL LOCATIONS MAY BE SHOWN ON PLAN.
2. RECESS AT THROWING RING. COORDINATE DEPTH, EXTENTS, AND LOCATION OF RECESS W/ ARCH DWGS AND TRACK EQUIPMENT SUPPLIER DWGS.

IMPORTANT P.E.M.B. NOTES:

1. UNLESS SPECIFICALLY NOTED OTHERWISEE, ALL STRUCTURAL STEEL ELEMENTS REQUIRED FOR A COMPLETE BUILDING STRUCTURE SHALL BE DESIGNED, SUPPLIED, AND INSTALLED BY THE P.E.M.B. CONTRACTOR.
2. COLUMN FOOTINGS SHALL BE CENTERED ON STEEL COLUMN CENTERLINES. STEEL COLUMN CENTERLINES SHALL BE DETERMINED BY P.E.M.B. CONTRACTOR UNLESS OTHERWISE NOTED. FOUNDATION CONTRACTOR SHALL COORDINATE.
3. CONCRETE CONTRACTOR SHALL SUPPLY ANCHOR BOLTS AND HARDWARE FOR P.E.M.B. ATTACHMENT TO THE FOUNDATION.CONCRETE FOUNDATION INSTALLER SHALL INSTALL ANCHOR BOLT FOR P.E.M.B. ATTACHMENT TO THE FOUNDATION. ANCHOR BOLT DIAMETER AND LAYOUT SHALL BE DESIGNED BY THE P.E.M.B. MANUFACTURE AND COORDINATED BY THE GENERAL CONTRACTOR. SEE DET F/S301 FOR TYPICAL ANCHOR BOLT DETAIL.
4. SEE ARCH DWGS FOR P.E.M.B. ELEMENT ELEVATIONS AND LOCATIONS THAT ARE NOT SHOWN ON STRUCTURAL DWGS.
5. SEE ARCH DWGS AND SPECIFICATIONS FOR INFORMATION ABOUT ROOF DECK AND METAL WALL PANELS.
6. PURLINS AND WIND GIRT SPACING AND QUANTITY ARE NOT SHOWN ON STRUCTURAL DWG AND SHALL BE PER P.E.M.B. DESIGN.
7. ROOFING SHALL BE DESIGNED AND SUPPLIED BY P.E.M.B. MANUFACTURER. ROOFING SHALL BE INSTALLED BY P.E.M.B. INSTALLER.
8. ROOF DIAPHGRAM BRACING IS REQUIRED AS DESIGNED BY P.E.M.B. SUPPLIER.

WALL FOOTING SCHEDULE

MARK	WIDTH	THICKNESS	REINFORCING CONT BOTTOM	TRANSVERSE REINFORCING BOTTOM
WF20	2'-0"	1'-0"	(2) #5	#4@96" O.C.

SPREAD FOOTING SCHEDULE

MARK	LENGTH	WIDTH	THICKNESS	REINFORCING E.W. BOTTOM
F40	4'-0"	4'-0"	1'-0"	(8) #4
F45	4'-6"	4'-6"	1'-6"	(9) #4
F50	5'-0"	5'-0"	1'-0"	(8) #4
F55	5'-6"	5'-6"	1'-6"	(8) #5
F60	6'-0"	6'-0"	1'-6"	(8) #5
F90	9'-0"	9'-0"	2'-0"	(16) #4

PROJECT N E W S

TRUE N E S W

REFERENCE ELEVATION (0'-0") = 1006.1' SEA LEVEL

JRA architects
3225 Summit Square Place, Suite 200
Lexington, Kentucky 40509
859.252.6781

NOT FOR CONSTRUCTION

BK BROWN+KUBICAN STRUCTURAL ENGINEERS
546 East Main Street, Suite 300
Lexington, KY 40508
859-543-0933
www.brownkubican.com

RFP 2 DRAWINGS

UK INDOOR TRACK FACILITY
UNIVERSITY OF KENTUCKY
700 SPORTS CENTER DRIVE LEXINGTON, KENTUCKY 40506

STRUCTURAL

PROJECT	202258
DATE	08/31/2022

REVISIONS

No.	Description	Date

JRA ARCHITECTS HAS RETAINED AN ELECTRONIC VERSION OF THESE DRAWINGS. THE CLIENT AGREES NOT TO REUSE THESE DRAWINGS - IN ELECTRONIC OR ANY OTHER FORMAT - IN WHOLE, OR IN PART, FOR ANY PURPOSE OTHER THAN FOR THE PROJECT. THE CLIENT AGREES NOT TO TRANSFER THESE ELECTRONIC FILES TO OTHERS WITHOUT THE PRIOR WRITTEN CONSENT OF THE ARCHITECT. THE CLIENT AGREES TO INDEMNIFY AND HOLD HARMLESS AGAINST THE ARCHITECT RESULTING IN ANY WAY FROM ANY UNAUTHORIZED CHANGES TO OR REUSE OF THE ELECTRONIC FILES FOR ANY OTHER PROJECT BY ANYONE OTHER THAN THE ARCHITECT.

FOUNDATION PLAN AREA A

S-204

COPYRIGHT 2022 - JRA, INC.

C:_REVIT_Locals\22157 (UK INDOOR TRACK AND FIELD) STR - RVT21_anorberg28.rvt
8/26/2022 3:09:46 PM

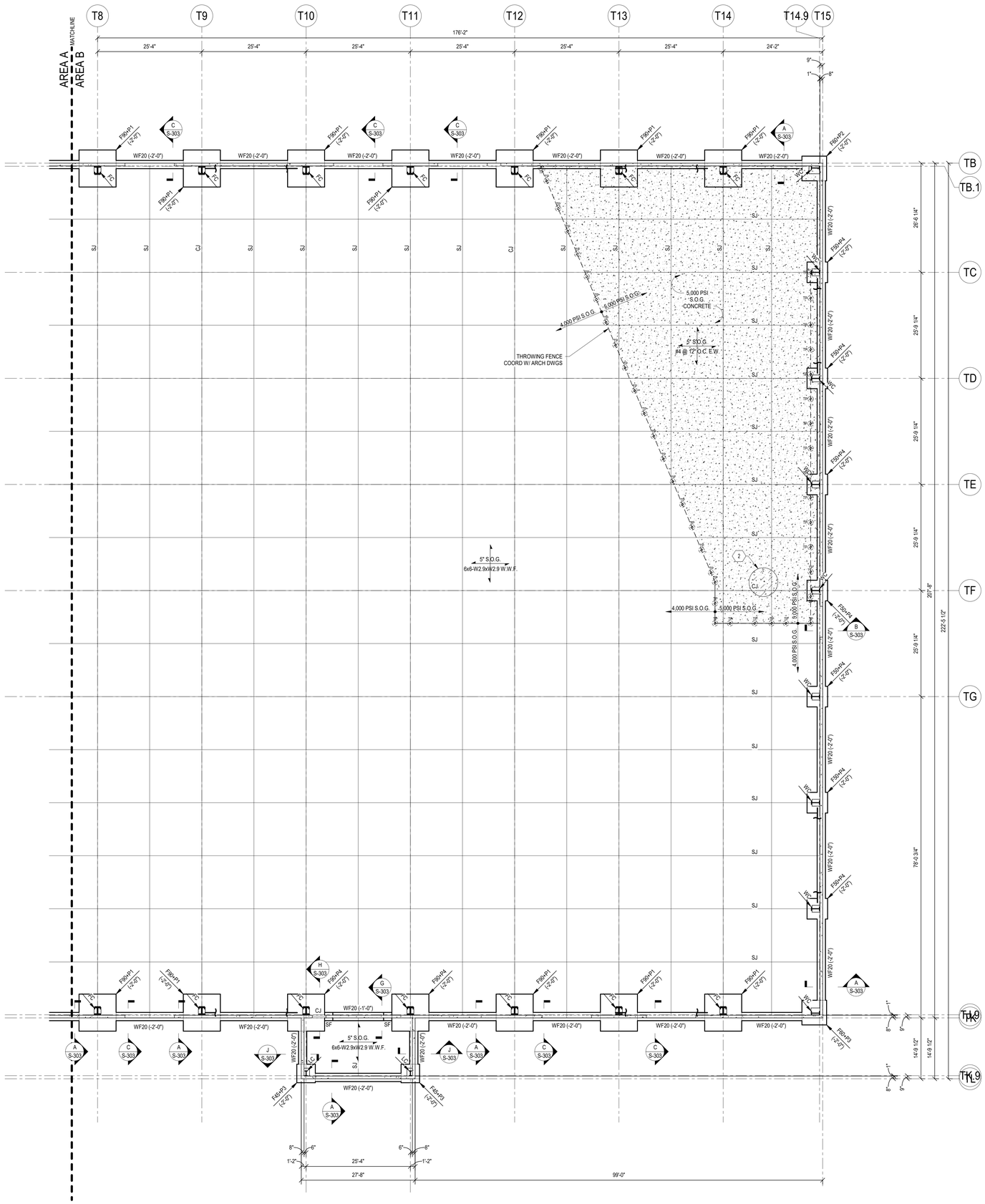

A S-205 FOUNDATION PLAN AREA B

3/32" = 1'-0"

FOUNDATION PLAN NOTES

1. ELEVATIONS SHOWN ARE TO THE TOP OF THE FOUNDATION AND ARE REFERENCED FROM FINISHED FIRST FLOOR REFERENCE ELEVATION (0'-0").
2. SEE DWG S-101 FOR GENERAL NOTES.
3. SEE DWG S-102 FOR SPECIAL INSPECTION NOTES.
4. SEE DWGS S-301 & S-302 FOR TYPICAL FOUNDATION DETAILS.
5. SEE DWG S-501 FOR COLUMN SCHEDULE.
6. SLAB ON GRADE SHALL BE PLACED ON VAPOR RETARDER (SEE SPECIFICATIONS) OVER 4" MINIMUM COMPACTED CRUSHED STONE OR DENSE GRADED AGGREGATE.
7. REINFORCE SLABS ON GRADE AT RE-ENTRANT CORNERS PER DETAIL H/S-301. REINFORCING BARS MAY NOT BE SHOWN GRAPHICALLY ON PLAN IN ALL LOCATIONS.

FOUNDATION LEGEND

F40	= SPREAD FOOTING. SEE SCHEDULE.
WF20	= WALL FOOTING. SEE SCHEDULE.
SF	= STEP FOOTING. SEE DETAIL C/S-301.
P1	= COLUMN PIER. SEE DETAIL B/S-302.
(-0'-8")	= TOP OF GRADE BEAM ELEVATION.
2"	= EXTENT OF SLAB DEPRESSION. DEPTH MEASURED FROM ADJACENT TOP OF CONCRETE.
SJ	= SAWN CONTRACTION JOINT. SEE DETAIL G/S-301.
CJ	= CONSTRUCTION JOINT. SEE DETAIL G/S-301.
	= DIAGONAL BRACING. SEE P.E.M.B. DRAWINGS FOR MORE INFORMATION.
	= C.M.U. WALL REINFORCED AS NOTED IN SECTION. REINFORCING CENTERED IN CORE.
	= CONCRETE WALL.
FC	= P.E.M.B. FRAME COLUMN. SEE P.E.M.B. DWGS.
WC	= P.E.M.B. WIND COLUMN. SEE P.E.M.B. DWGS.
LC	= P.E.M.B. LEAN-TO FRAME COLUMN. SEE P.E.M.B. DWGS.
PB	= PIPE BOLLARD. SEE DETAIL N/S-301.
TP	= THROWING AREA POST. SEE DETAIL N/S-301.

TAG NOTES

1. RE-ENTRANT CORNER SLAB ON GRADE REINFORCING. SEE DET H/S-301. NOT ALL LOCATIONS MAY BE SHOWN ON PLAN.
2. RECESS AT THROWING RING. COORDINATE DEPTH, EXTENTS, AND LOCATION OF RECESS W/ ARCH DWGS AND TRACK EQUIPMENT SUPPLIER DWGS.

IMPORTANT P.E.M.B. NOTES:

1. UNLESS SPECIFICALLY NOTED OTHERWISEE, ALL STRUCTURAL STEEL ELEMENTS REQUIRED FOR A COMPLETE BUILDING STRUCTURE SHALL BE DESIGNED, SUPPLIED, AND INSTALLED BY THE P.E.M.B. CONTRACTOR.
2. COLUMN FOOTINGS SHALL BE CENTERED ON STEEL COLUMN CENTERLINES. STEEL COLUMN CENTERLINES SHALL BE DETERMINED BY P.E.M.B. CONTRACTOR UNLESS OTHERWISE NOTED. FOUNDATION CONTRACTOR SHALL COORDINATE.
3. CONCRETE CONTRACTOR SHALL SUPPLY ANCHOR BOLTS AND HARDWARE FOR P.E.M.B. ATTACHMENT TO THE FOUNDATION.CONCRETE FOUNDATION INSTALLER SHALL INSTALL ANCHOR BOLT FOR P.E.M.B. ATTACHMENT TO THE FOUNDATION. ANCHOR BOLT DIAMETER AND LAYOUT SHALL BE DESIGNED BY THE P.E.M.B. MANUFACTURE AND COORDINATED BY THE GENERAL CONTRACTOR. SEE DET F/S301 FOR TYPICAL ANCHOR BOLT DETAIL.
4. SEE ARCH DWGS FOR P.E.M.B. ELEMENT ELEVATIONS AND LOCATIONS THAT ARE NOT SHOWN ON STRUCTURAL DWGS.
5. SEE ARCH DWGS AND SPECIFICATIONS FOR INFORMATION ABOUT ROOF DECK AND METAL WALL PANELS.
6. PURLINS AND WIND GIRT SPACING AND QUANTITY ARE NOT SHOWN ON STRUCTURAL DWG AND SHALL BE PER P.E.M.B. DESIGN.
7. ROOFING SHALL BE DESIGNED AND SUPPLIED BY P.E.M.B. MANUFACTURER. ROOFING SHALL BE INSTALLED BY P.E.M.B. INSTALLER.
8. ROOF DIAPHGRAM BRACING IS REQUIRED AS DESIGNED BY P.E.M.B. SUPPLIER.

WALL FOOTING SCHEDULE

MARK	WIDTH	THICKNESS	REINFORCING CONT BOTTOM	TRANSVERSE REINFORCING BOTTOM
WF20	2'-0"	1'-0"	(2) #5	#4@96" O.C.

SPREAD FOOTING SCHEDULE

MARK	LENGTH	WIDTH	THICKNESS	REINFORCING E.W. BOTTOM
F40	4'-0"	4'-0"	1'-0"	(8) #4
F45	4'-6"	4'-6"	1'-6"	(9) #4
F50	5'-0"	5'-0"	1'-0"	(8) #4
F55	5'-6"	5'-6"	1'-6"	(8) #5
F60	6'-0"	6'-0"	1'-6"	(8) #5
F90	9'-0"	9'-0"	2'-0"	(16) #4

PROJECT N E S W

TRUE N E S W

REFERENCE ELEVATION (0'-0") = 1006.1' SEA LEVEL

JRA architects
3225 Summit Square Place, Suite 200
Lexington, Kentucky 40509
859.252.6781

NOT FOR CONSTRUCTION

BK BROWN+KUBICAN STRUCTURAL ENGINEERS
546 East Main Street, Suite 300
Lexington, KY 40508
859-543-0933
www.brownkubican.com

RFP 2 DRAWINGS

UK INDOOR TRACK FACILITY

UNIVERSITY OF KENTUCKY
700 SPORTS CENTER DRIVE LEXINGTON, KENTUCKY 40506

STRUCTURAL

PROJECT	202258
DATE	08/31/2022

REVISIONS

No.	Description	Date

JRA ARCHITECTS HAS RETAINED AN ELECTRONIC VERSION OF THESE DRAWINGS. THE CLIENT AGREES NOT TO REPRODUCE THESE DRAWINGS, ELECTRONIC OR ANY OTHER FORMAT - IN WHOLE, OR IN PART, FOR ANY PURPOSE OTHER THAN FOR THE PROJECT. THE CLIENT AGREES NOT TO TRANSFER THESE ELECTRONIC FILES TO OTHERS WITHOUT THE PRIOR WRITTEN CONSENT OF THE ARCHITECT. THE CLIENT FURTHER AGREES TO WAIVE ALL CLAIMS AGAINST THE ARCHITECT RESULTING IN ANY WAY FROM ANY UNAUTHORIZED CHANGES TO OR REUSE OF THE ELECTRONIC FILES FOR ANY OTHER PROJECT BY ANYONE OTHER THAN THE ARCHITECT.

FOUNDATION PLAN AREA B

S-205

COPYRIGHT 2022 - JRA, INC.

C:_REVIT_Locals\22157 (UK INDOOR TRACK AND FIELD) STR - RVT21_anorberg28.RG.rvt
8/26/2022 3:09:47 PM

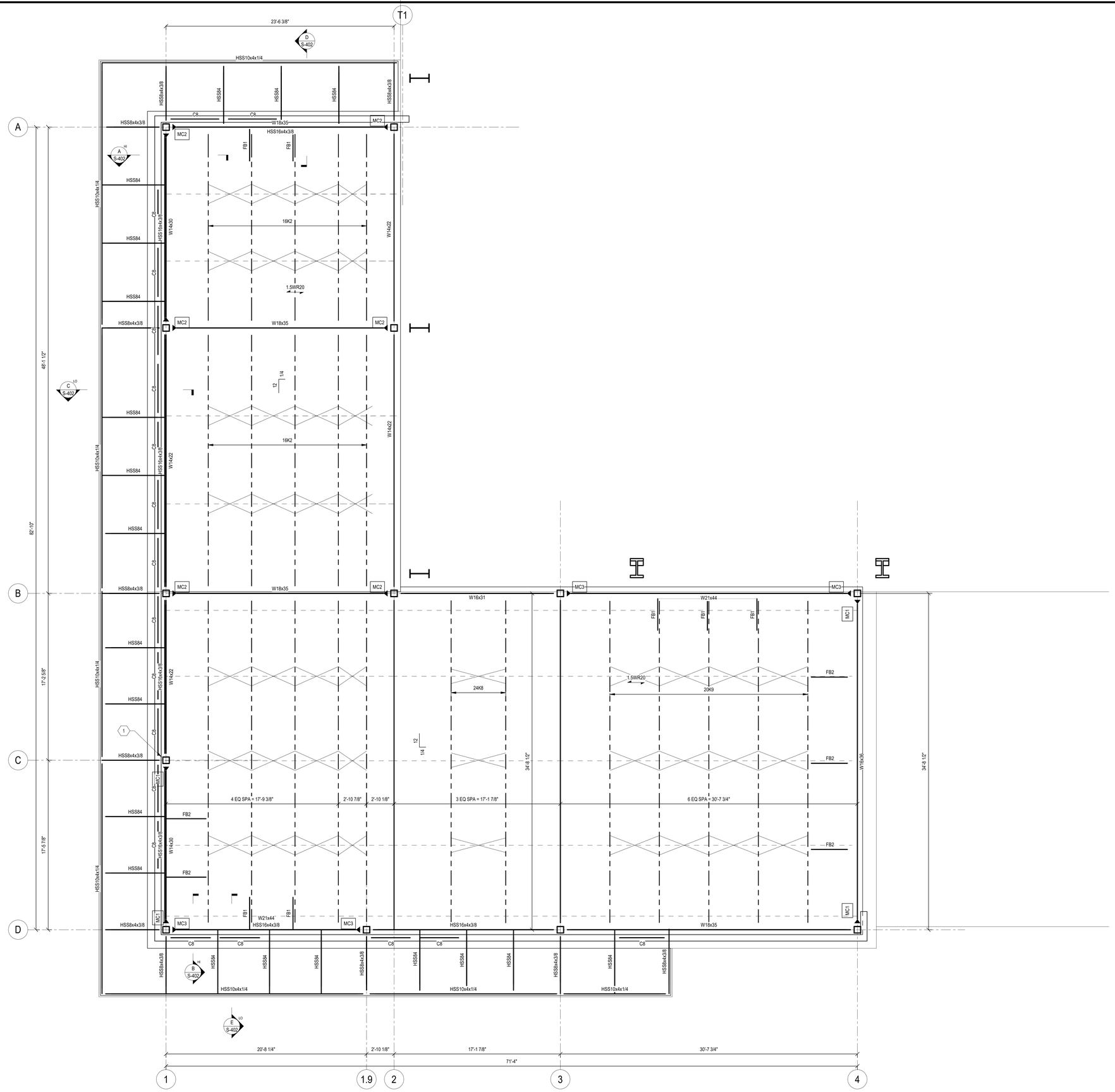

A S-206 ROOF FRAMING PLAN
1/4" = 1'-0"

FRAMING PLAN NOTES

1. ELEVATIONS SHOWN ARE TO THE TOP OF STEEL AND ARE REFERENCED FROM FINISHED FIRST FLOOR REFERENCE ELEVATION (0'-0").
2. SEE DWG S-101 FOR GENERAL NOTES.
3. SEE DWG S-102 FOR SPECIAL INSPECTION NOTES.
4. SEE DWG S-401 FOR TYPICAL FRAMING DETAILS.
5. SEE DWG S-501 FOR COLUMN SCHEDULE.
6. SPACE BEAMS / JOISTS EVENLY THROUGHOUT BAY U.N.O.
7. SIZE AND LOCATION OF ROOF TOP MECHANICAL UNITS SHALL BE COORDINATED WITH THE MECHANICAL CONTRACTOR. OPERATING WEIGHT OF UNIT (INCLUDING CURBS) SHALL NOT EXCEED WEIGHT SHOWN ON PLAN. SEE A/S-401 FOR ADDITIONAL FRAMING REQUIREMENTS AT UNITS.

FRAMING LEGEND

1.5WR20	= 1 1/2" 20 GA GALVANIZED WIDE RIB STEEL ROOF DECK.
W16x26 (15k)	STEEL BEAM SIZE. SERVICE LOAD REACTION (KIPS) EACH END.
(+13'-7")	= TOP OF STEEL BEAM ELEVATION REFERENCED FROM FINISHED FIRST FLOOR REFERENCE ELEVATION (0'-0").
MC1	= MOMENT CONNECTION. SEE DETAIL N/S-401.
L1	= STEEL LINTEL. SEE GENERAL NOTES FOR SCHEDULE.
FB1	= BEAM BOTTOM FLANGE BRACE. SEE DETAIL G/S-401.
CANT	= CANTILEVER BEAM END.
12 / 1/4	= ROOF SLOPE.
HSS84	= HSS8x4x1/4.
HSS164	= HSS16x4x3/8.
C8	= C8x11.5.
RD	= ROOF DRAIN. SEE DET A/S-401 FOR FRAMING REQUIREMENTS. SEE ARCH DWGS FOR LOCATIONS.

TAG NOTES

1. HSS12x8x3/8 STUD TO SUPPORT HSS
2. BEAM CONNECT EACH END PER DET X/S-402.

PROJECT N W E S
TRUE N W E S

REFERENCE ELEVATION (0'-0") = 1006.1' SEA LEVEL

JRA architects
3225 Summit Square Place, Suite 200
Lexington, Kentucky 40509
859.252.6781

NOT FOR CONSTRUCTION

BROWN+KUBICAN STRUCTURAL ENGINEERS
546 East Main Street, Suite 300
Lexington, KY 40508
859-543-0933
www.brownkubican.com

RFP 2 DRAWINGS

UK INDOOR TRACK FACILITY
UNIVERSITY OF KENTUCKY
700 SPORTS CENTER DRIVE LEXINGTON, KENTUCKY 40506

STRUCTURAL

PROJECT	202258
DATE	08/31/2022

REVISIONS

No.	Description	Date

JRA ARCHITECTS HAS RETAINED AN ELECTRONIC VERSION OF THESE DRAWINGS. THE CLIENT AGREES NOT TO REUSE THESE DRAWINGS - IN ELECTRONIC OR ANY OTHER FORMAT - IN WHOLE, OR IN PART, FOR ANY PURPOSE OTHER THAN FOR THE PROJECT. THE CLIENT AGREES NOT TO TRANSFER THESE ELECTRONIC FILES TO OTHERS WITHOUT THE PRIOR WRITTEN CONSENT OF THE ARCHITECT. THE CLIENT FURTHER AGREES TO WAIVE ALL CLAIMS AGAINST THE ARCHITECT RESULTING IN ANY WAY FROM ANY UNAUTHORIZED CHANGES TO OR REUSE OF THE ELECTRONIC FILES FOR ANY OTHER PROJECT BY ANYONE OTHER THAN THE ARCHITECT.

ROOF FRAMING PLAN

S-206

COPYRIGHT 2022 - JRA, INC.

C:_REVIT_Locals\22157 (UK INDOOR TRACK AND FIELD) STR - RVT21_anorberg28.RG.rvt
8/26/2022 3:09:48 PM

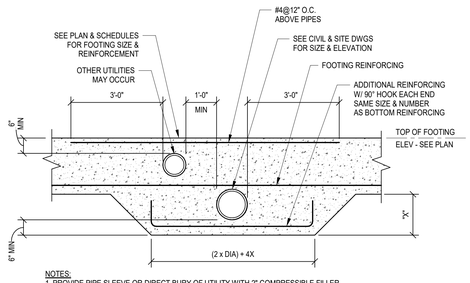

NOTES:
1. PROVIDE PIPE SLEEVE OR DIRECT BURY OF UTILITY WITH 2" COMPRESSIBLE FILLER (SUCH AS FIBERGLASS INSULATION) CONTINUOUSLY PLACED ALL AROUND.
2. DETAIL APPLIES AT TRENCH FOOTINGS ONLY. DO NOT USE THIS DETAIL FOR GRADE BEAMS.

A S-301 TYPICAL FOOTING PENETRATION/SLEEVE DETAIL
NOT TO SCALE

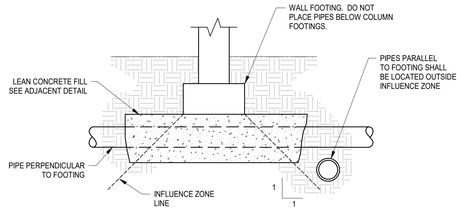

INFLUENCE ZONE

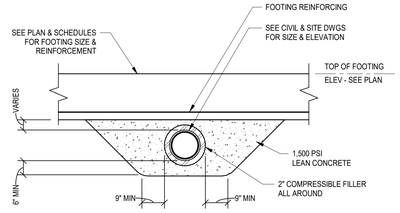

NOTES:
1. PROVIDE CONCRETE PROTECTION AROUND UTILITY LINE WHEN LINE IS WITHIN FOOTING INFLUENCE ZONE. SEE ADJACENT DETAIL FOR INFLUENCE ZONE DEFINITION.
2. DETAIL APPLIES WHEREVER TOP OF PIPE IS WITHIN 4 PIPE DIAMETERS TO BOTTOM OF FOOTING OR IF UTILITY IS INSTALLED AFTER FOOTING PLACEMENT (REGARDLESS OF DEPTH).
3. PROVIDE PIPE SLEEVE OR DIRECT BURY OF UTILITY WITH 2" COMPRESSIBLE FILLER (SUCH AS FIBERGLASS INSULATION) CONTINUOUSLY PLACED ALL AROUND.

B S-301 TYPICAL UTILITY LINE BELOW FOOTING DETAIL
NOT TO SCALE

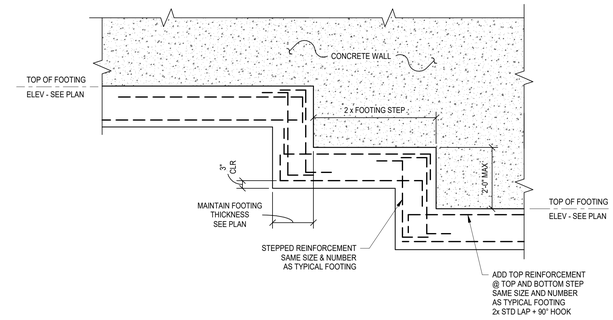

C S-301 TYPICAL STEP FOOTING DETAIL
NOT TO SCALE

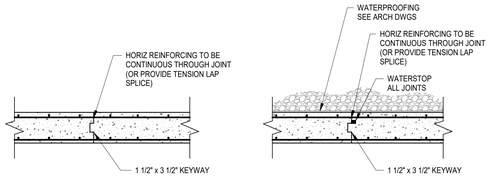

NOTES:
1. MAXIMUM LENGTH OF WALL POUR = 40'-0".
2. PERMIT 48 HOURS BETWEEN ADJACENT POURS.
3. SEE PLANS FOR ADDITIONAL JOINT LOCATIONS.
4. FOR STEM WALLS THAT ARE BELOW GRADE (BOTH SIDES), MAXIMUM POUR LENGTH MAY BE INCREASED TO 60'-0".

D S-301 TYPICAL CONCRETE WALL CONSTRUCTION JOINT DETAIL
NOT TO SCALE

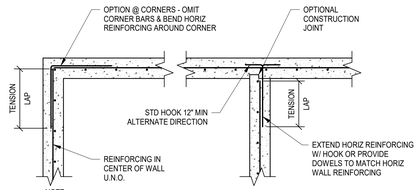

NOTE:
WHERE BAR SIZES DIFFER, LAP FOR LARGER SIZE.

E S-301 TYPICAL CONCRETE WALL REINFORCING DETAIL
NOT TO SCALE

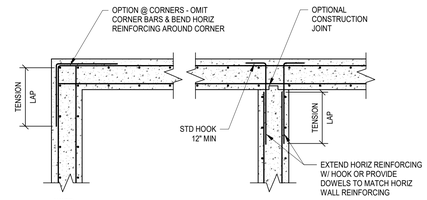

NOTE:
WHERE BAR SIZES DIFFER, LAP FOR LARGER SIZE.

F S-301 TYPICAL CONCRETE WALL REINFORCING DETAIL
NOT TO SCALE

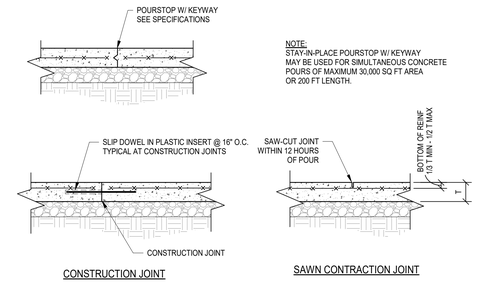

NOTE:
STAY-IN-PLACE POURSTOP W/ KEYWAY MAY BE USED FOR SIMULTANEOUS CONCRETE POURS OF MAXIMUM 30,000 SQ FT AREA OR 200 FT LENGTH.

NOTES:
1. JOINTS SHALL BE INSTALLED IN SLABS ON GROUND AT A MAXIMUM SPACING IN FEET OF 3 TIMES THE SLAB THICKNESS IN INCHES IN EACH DIRECTION BY EITHER OF THE ABOVE METHODS. MAXIMUM LENGTH OF ANY SLAB ON GROUND POUR TO BE 100'-0" BETWEEN CONSTRUCTION JOINTS. RATIO OF LENGTH TO WIDTH SHALL NOT EXCEED 2. THIS SPACING OF JOINTS SHALL APPLY UNLESS SPECIFICALLY SHOWN OTHERWISE.
2. REINFORCING SHALL BE DISCONTINUOUS THROUGH CONSTRUCTION JOINTS.

G S-301 SLAB ON GROUND JOINT DETAIL
NOT TO SCALE

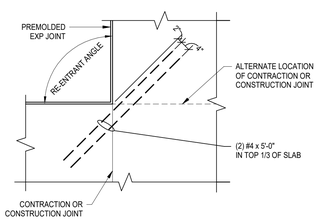

H S-301 TYPICAL SLAB ON GRADE JOINT AT RE-ENTRANT CORNER
NOT TO SCALE

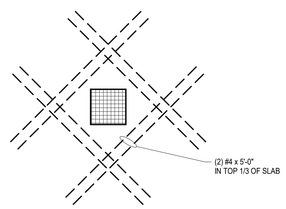

J S-301 TYPICAL SLAB REINFORCEMENT AT FLOOR BOXES, TRENCH DRAINS, ETC DETAIL
NOT TO SCALE

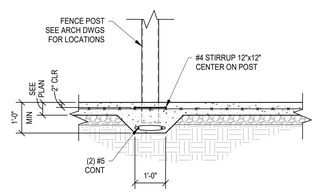

K S-301 TYPICAL THICKENED SLAB AT THROWING FENCE DETAIL
NOT TO SCALE

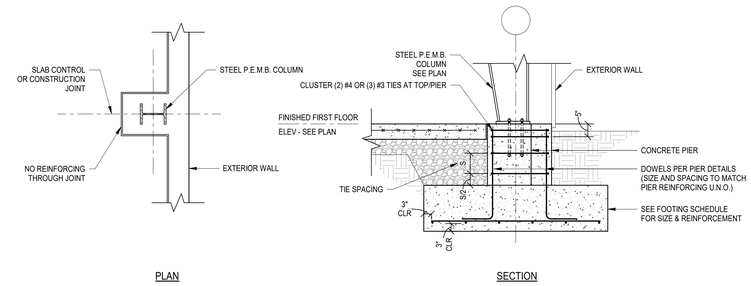

L S-301 TYPICAL PEMB COLUMN AND FOOTING DETAIL
NOT TO SCALE

DIAMETER	L	T	PROJECTION	GRADE	MIN WASHER DIM
1/2" **	6 1/2"	3"	2"	36	STD ROUND
5/8"	10"	3"	2"	36	3/16" x 1 3/4" x 1 3/4"
3/4"	1'-7"	5"	3"	36	1/4" x 2" x 2"
1"	2'-0"	6"	4"	36	3/8" x 3" x 3"
1 1/4"	2'-0"	6"	4"	36	1/2" x 3 x 3"
1 1/2"	2'-2"	6"	4"	50	1/2" x 3 1/2" x 3 1/2"

NOTE:
** 1/2"ø BOLT MAY BE ASTM A307 MACHINE BOLT WITH NUT AND WASHER.

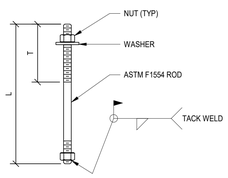

M S-301 TYPICAL ANCHOR ROD DETAIL
NOT TO SCALE

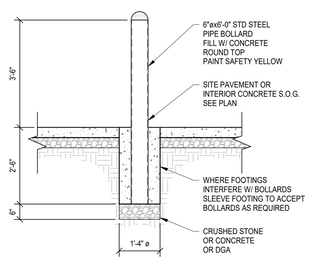

N S-301 TYPICAL PIPE BOLLARD FOUNDATION DETAIL
NOT TO SCALE

JRA architects
3225 Summit Square Place, Suite 200
Lexington, Kentucky 40509
859.252.6781

NOT FOR CONSTRUCTION

BROWN+KUBICAN
STRUCTURAL ENGINEERS
546 East Main Street, Suite 300
Lexington, KY 40508
859-543-0933
www.brownkubican.com

RFP 2 DRAWINGS

UK INDOOR TRACK FACILITY
UNIVERSITY OF KENTUCKY
700 SPORTS CENTER DRIVE LEXINGTON, KENTUCKY 40506

STRUCTURAL

PROJECT	202258
DATE	08/31/2022

REVISIONS

No.	Description	Date

JRA ARCHITECTS HAS RETAINED AN ELECTRONIC VERSION OF THESE DRAWINGS. THE CLIENT AGREES NOT TO REUSE THESE DRAWINGS - IN ELECTRONIC OR ANY OTHER FORMAT - IN WHOLE, OR IN PART, FOR ANY PURPOSE OTHER THAN FOR THE PROJECT. THE CLIENT AGREES NOT TO TRANSFER THESE ELECTRONIC FILES TO OTHERS WITHOUT THE PRIOR WRITTEN CONSENT OF THE ARCHITECT. THE CLIENT FURTHER AGREES TO WAIVE ALL CLAIMS AGAINST THE ARCHITECT RESULTING IN ANY WAY FROM ANY CHANGES OR MODIFICATIONS TO OR REUSE OF THE ELECTRONIC FILES FOR ANY OTHER PROJECT BY ANYONE OTHER THAN THE ARCHITECT.

TYPICAL FOUNDATION DETAILS

S-301

COPYRIGHT 2022 - JRA, INC.

C:_REVIT_Locals\22157 (UK INDOOR TRACK AND FIELD) STR - RVT21_anorberg28.RG.rvt
8/26/2022 3:09:48 PM

NOTES:
1. PROVIDE VAPOR RETARDER THAT IS RESISTANT TO DETERIORATION WHEN TESTED ACCORDING TO ASTM E 154. SEE SPECIFICATION SECTION 033000.
2. FOLLOW MANUFACTURER'S RECOMMENDATIONS FOR INSTALLATION.
3. SEAL ALL PENETRATIONS AND REPAIR ALL DAMAGED SURFACES WITH APPROVED JOINT TAPE OR MASTIC.
4. PREPARE ALL SURFACES FOR PROPER ADHESION WITH APPROVED TAPE. ALL SURFACES SHALL BE CLEAN, DRY, AND FROST FREE.
5. TURN UP BARRIER AT ALL EXTERIOR OR INTERIOR WALL SURFACES AND SEAL WITH APPROVED TAPE.

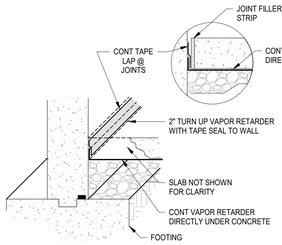

TYPICAL @ WALL

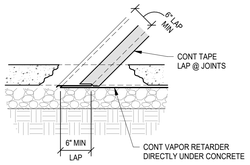

TYPICAL @ SEAM

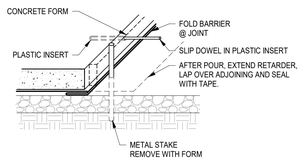

TYPICAL DIVIDED POUR @ CONSTRUCTION JOINT

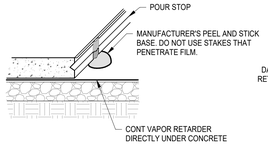

OPTIONAL SIMULTANEOUS POUR @ CONSTRUCTION JOINT

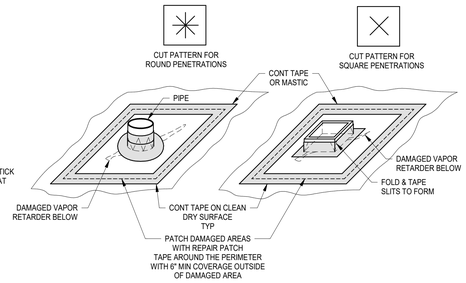

TYPICAL PIPE REPAIR

TYPICAL RECTANGULAR REPAIR

A / S-302 TYPICAL VAPOR RETARDER DETAILS

NOT TO SCALE

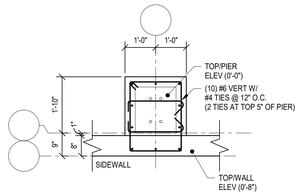

P1

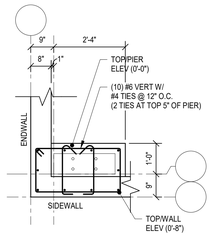

P2

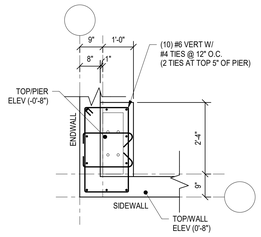

P3

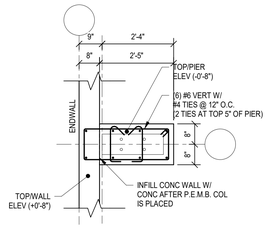

P4

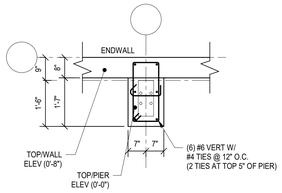

P5

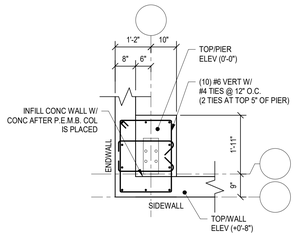

P6

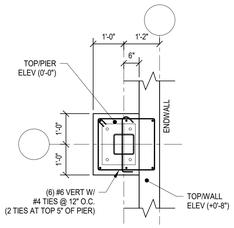

P7

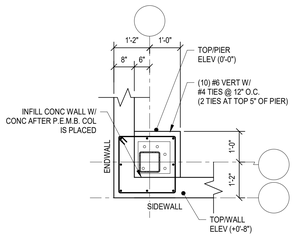

P6

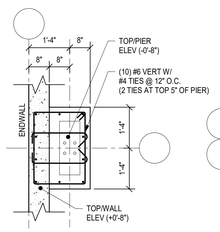

P9

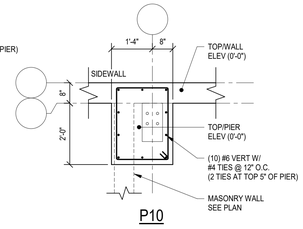

P10

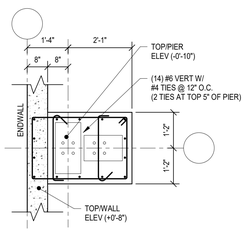

P11

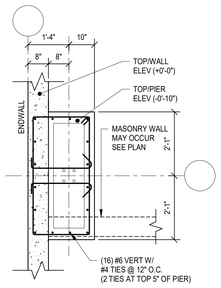

P12

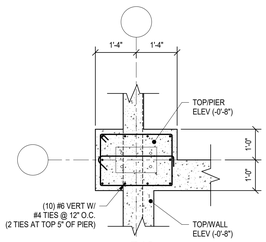

P13

B / S-302 PIER SCHEDULE

NOT TO SCALE

JRA architects
3225 Summit Square Place, Suite 200
Lexington, Kentucky 40509
859.252.6781

NOT FOR CONSTRUCTION

BROWN+KUBICAN STRUCTURAL ENGINEERS
546 East Main Street, Suite 300
Lexington, KY 40508
859-543-0933
www.brownkubican.com

RFP 2 DRAWINGS

UK INDOOR TRACK FACILITY
UNIVERSITY OF KENTUCKY
700 SPORTS CENTER DRIVE LEXINGTON, KENTUCKY 40506

STRUCTURAL

PROJECT	202258
DATE	08/31/2022

REVISIONS

No.	Description	Date

JRA ARCHITECTS HAS RETAINED AN ELECTRONIC VERSION OF THESE DRAWINGS. THE CLIENT AGREES NOT TO REUSE THESE DRAWINGS - IN ELECTRONIC OR PAPER FORM - IN WHOLE OR IN PART, FOR ANY PURPOSE OTHER THAN FOR THE PROJECT. THE CLIENT AGREES NOT TO TRANSFER THESE ELECTRONIC FILES TO OTHERS WITHOUT THE PRIOR WRITTEN CONSENT OF THE ARCHITECT. THE CLIENT FURTHER AGREES TO WAIVE ALL CLAIMS AGAINST THE ARCHITECT RESULTING IN ANY WAY FROM ANY UNAUTHORIZED CHANGES TO OR REUSE OF THE ELECTRONIC FILES FOR ANY OTHER PROJECT BY ANYONE OTHER THAN THE ARCHITECT.

TYPICAL FOUNDATION DETAILS

S-302

COPYRIGHT 2022 - JRA, INC.

C:_REVIT_Locals\22157 (UK INDOOR TRACK AND FIELD) STR - RVT21_anorberg28.RG.rvt
8/26/2022 3:09:49 PM

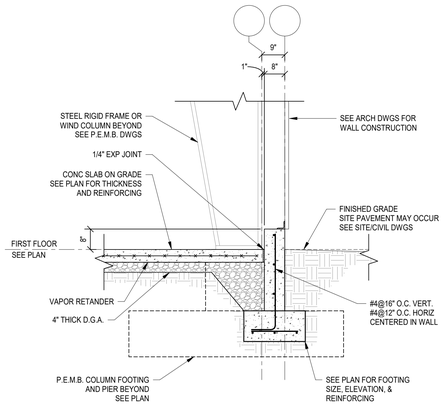

A S-303 SECTION
1/2" = 1'-0"

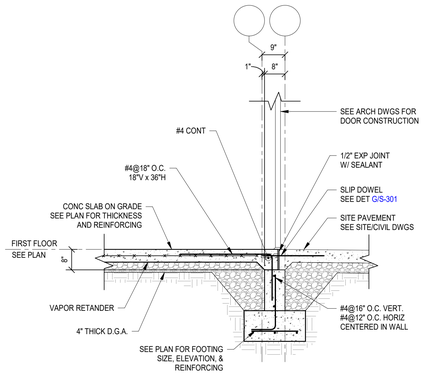

B S-303 SECTION
1/2" = 1'-0"

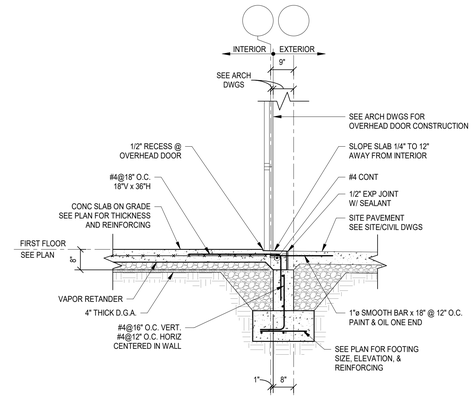

C S-303 SECTION
1/2" = 1'-0"

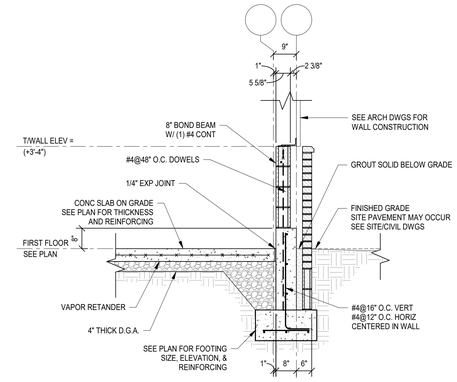

D S-303 SECTION
1/2" = 1'-0"

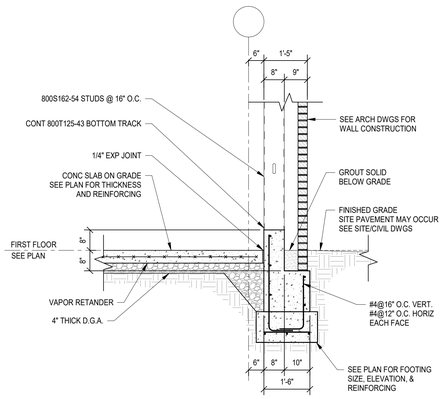

E S-303 SECTION
1/2" = 1'-0"

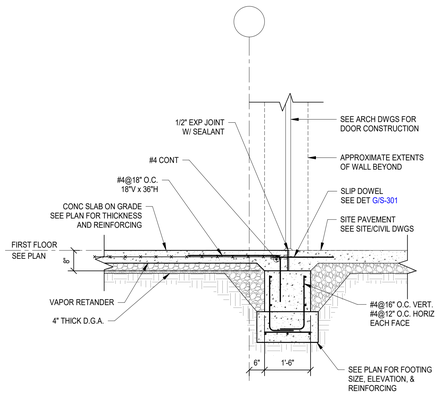

F S-303 SECTION
1/2" = 1'-0"

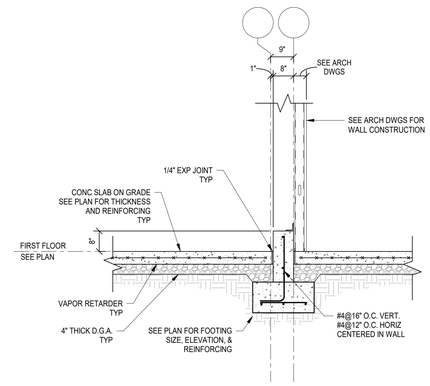

G S-303 SECTION
1/2" = 1'-0"

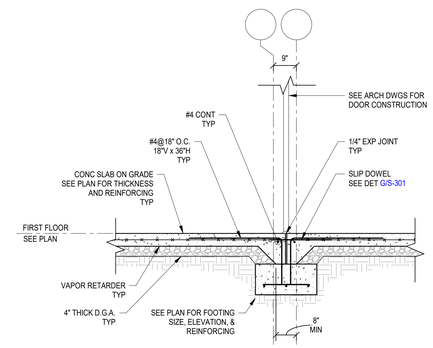

H S-303 SECTION
1/2" = 1'-0"

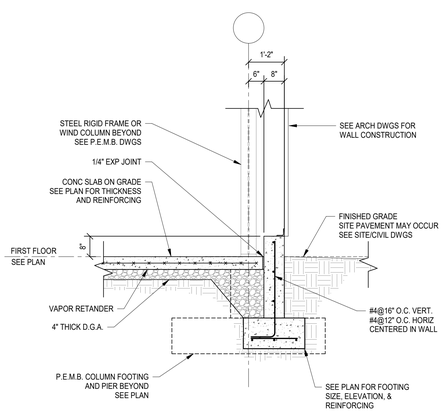

J S-303 SECTION
1/2" = 1'-0"

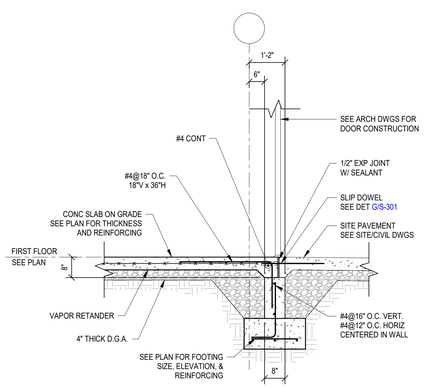

K S-303 SECTION
1/2" = 1'-0"

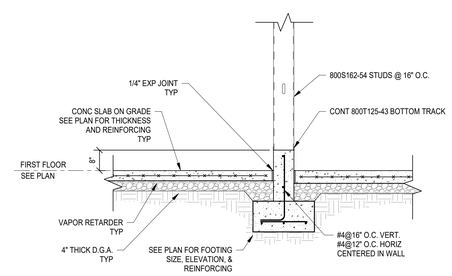

L S-303 SECTION
1/2" = 1'-0"

JRA architects
3225 Summit Square Place, Suite 200
Lexington, Kentucky 40509
859.252.6781

NOT FOR CONSTRUCTION

BROWN+KUBICAN STRUCTURAL ENGINEERS
546 East Main Street, Suite 300
Lexington, KY 40508
859-543-0933
www.brownkubican.com

RFP 2 DRAWINGS

UK INDOOR TRACK FACILITY

UNIVERSITY OF KENTUCKY
700 SPORTS CENTER DRIVE LEXINGTON, KENTUCKY 40506

STRUCTURAL

PROJECT	202258
DATE	08/31/2022

REVISIONS

No.	Description	Date

JRA ARCHITECTS HAS RETAINED AN ELECTRONIC VERSION OF THESE DRAWINGS. THE CLIENT AGREES NOT TO REUSE THESE DRAWINGS - IN ELECTRONIC OR ANY OTHER FORMAT - IN WHOLE, OR IN PART, FOR ANY PURPOSE OTHER THAN FOR THE PROJECT. THE CLIENT AGREES NOT TO TRANSFER THESE ELECTRONIC FILES TO OTHERS WITHOUT THE PRIOR WRITTEN CONSENT OF THE ARCHITECT. THE CLIENT FURTHER AGREES TO WAIVE ALL CLAIMS AGAINST THE ARCHITECT RESULTING IN ANY WAY FROM ANY UNAUTHORIZED CHANGES TO OR REUSE OF THE ELECTRONIC FILES FOR ANY OTHER PROJECT BY ANYONE OTHER THAN THE ARCHITECT.

FOUNDATION SECTIONS

S-303

COPYRIGHT 2022 - JRA, INC.

C:_REVIT_Locals\22157 (UK INDOOR TRACK AND FIELD) STR - RVT21_anorberg28.RG.rvt
8/26/2022 3:09:50 PM

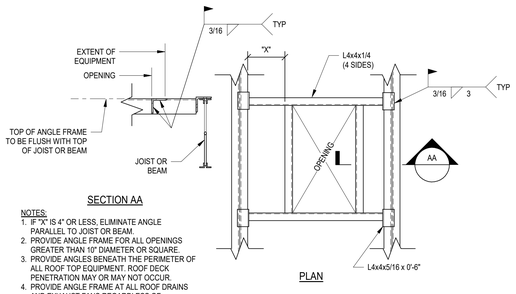

SECTION AA

PLAN

NOTES:
1. IF "X" IS 4" OR LESS, ELIMINATE ANGLE PARALLEL TO JOIST OR BEAM.
2. PROVIDE ANGLE FRAME FOR ALL OPENINGS GREATER THAN 10" DIAMETER OR SQUARE.
3. PROVIDE ANGLES BENEATH THE PERIMETER OF ALL ROOF TOP EQUIPMENT. ROOF DECK PENETRATION MAY OR MAY NOT OCCUR.
4. PROVIDE ANGLE FRAME AT ALL ROOF DRAINS AND EXHAUST FANS REGARDLESS OF PENETRATION SIZE. SEE MECHANICAL DWGS AND ROOF PLAN FOR LOCATIONS.
5. CONTRACTOR TO VERIFY SIZE AND LOCATION OF ALL OPENINGS. COORDINATE WITH ARCHITECTURAL AND MECHANICAL DWGS.

A S-401 TYPICAL ROOF FRAME OPENING DETAIL
NOT TO SCALE

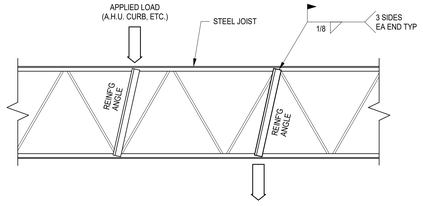

NOTES:
1. MINIMUM ANGLE SIZE L1x1x1/8 FOR JOISTS 30" DEEP AND SHALLOWER AND L2x2x1/4 FOR JOISTS DEEPER THAN 30".
2. WELD ONE END OF ANGLE TO JOIST AT THE POINT OF LOAD APPLICATION AND THE OPPOSITE END TO THE NEAREST JOIST PANEL POINT.
3. DETAIL APPLIES FOR ALL CONCENTRATED LOADS GREATER THAN 250 LBS LOCATED MORE THAN 3" FROM THE CLOSEST JOIST PANEL POINT.

B S-401 TYPICAL STEEL JOIST REINFORCING DETAIL
NOT TO SCALE

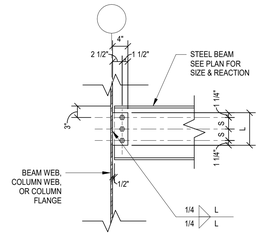

CONNECTION CAPACITY TABLE

NO. OF BOLTS ASTM A325-N	LENGTH OF PLATE L (INCHES)	CONNECTION CAPACITY (KIPS)
2	5 1/2	12
3	8 1/2	23
4	11 1/2	30
5	14 1/2	40
6	17 1/2	50

NOTES:
1. ALL CONNECTION PLATES, 3/8" THICK.
2. ALL BOLTS ASTM A325-N, 3/4"ø.
3. ALL WELDS E70XX.
4. BOLT SPACING (S) = 3".
5. SHORT HORIZONTAL SLOTTED HOLES MAY BE USED.
6. SINGLE PLATE SHEAR CONNECTIONS ARE NOT PERMITTED WHERE THE REACTION EXCEEDS 50 KIPS, AT FIELD APPLIED CONNECTIONS, OR CONNECTIONS TO COLUMNS (OTHER THAN AT MOMENT CONNECTIONS, SKEWED CONNECTIONS, PIPE COLUMNS, TUBE COLUMNS WITH FACE DIMENSION 4" OR LESS, OR CONNECTIONS WITH REACTIONS LESS THAN 15 KIPS).
7. WHERE CONNECTION PLATE IS SKEWED UP TO 10° RELATIVE TO THE PERPENDICULAR CONDITION, PROVIDE FILLET WELDS AS SHOWN. WHERE PLATE IS SKEWED BETWEEN 10° AND 45°, ADJUST WELDS PER AISC STEEL MANUAL GUIDELINES. WHERE PLATE IS SKEWED BETWEEN 45° AND 60°, PROVIDE CJP WELD WITH BACKER BAR FOR PLATE-TO-SUPPORT CONNECTION.

C S-401 TYPICAL SINGLE PLATE SHEAR CONNECTION DETAIL
NOT TO SCALE

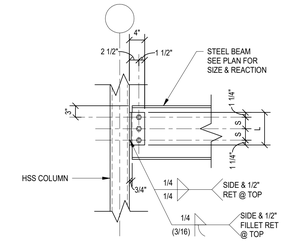

CONNECTION CAPACITY TABLE

NO. OF BOLTS ASTM A325-N	LENGTH OF WT L (INCHES)	CONNECTION CAPACITY (KIPS)
2	5 1/2	12
3	8 1/2	18
4	11 1/2	26
5	14 1/2	36
6	17 1/2	46
7	20 1/2	56

NOTES:
1. ALL CONNECTION MATERIAL, WT4x7.5.
2. ALL BOLTS ASTM A325-N, 3/4"ø.
3. ALL WELDS E70XX.
4. BOLT SPACING (S) = 3".
5. SHORT HORIZONTAL SLOTTED HOLES MAY BE USED.

D S-401 TYPICAL WT SHEAR CONNECTION DETAIL
NOT TO SCALE

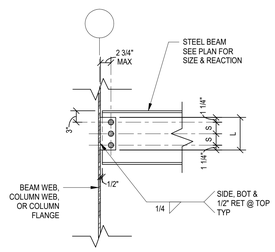

CONNECTION CAPACITY TABLE

NO. OF BOLTS ASTM A325-N	LENGTH OF ANGLE L (INCHES)	CONNECTION CAPACITY (KIPS)
2	5 1/2	9
3	8 1/2	18
4	11 1/2	28
5	14 1/2	38
6	17 1/2	48
7	20 1/2	58
8	23 1/2	68
9	26 1/2	77
10	29 1/2	87

NOTES:
1. ALL CONNECTION ANGLES, L4x3x3/8 SLO.
2. ALL BOLTS ASTM A325-N, 3/4"ø.
3. ALL WELDS E70XX.
4. BOLT SPACING (S) = 3".
5. SHORT HORIZONTAL SLOTTED HOLES MAY BE USED AT SUPPORTED BEAM CONNECTION. STANDARD-SIZED HOLES SHALL BE USED IN CONNECTION AT SUPPORT WHERE BOTH LEGS ARE BOLTED.
6. BOTH LEGS MAY BE BOLTED WITH NO REDUCTION IN CONNECTION CAPACITY AS LONG AS THE BOLTS THROUGH THE SUPPORTING MEMBER ARE NOT SHARED WITH A CONNECTION ON THE OPPOSITE SIDE OF THE SUPPORT.

E S-401 TYPICAL SINGLE ANGLE SHEAR CONNECTION DETAIL
NOT TO SCALE

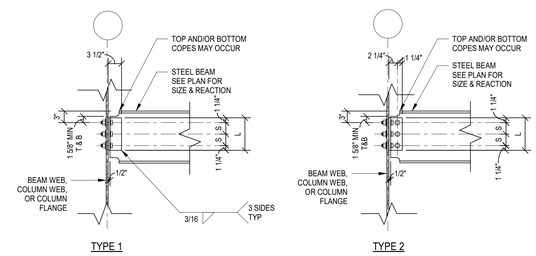

TYPE 1 TYPE 2

CONNECTION CAPACITY TABLE

NO. OF BOLTS ASTM A325-N	LENGTH OF ANGLE L (INCHES)	CONNECTION CAPACITY (KIPS)			
		TYPE 1	TYPE 2	TYPE 3	TYPE 4
2	5 1/2	19	14	14	14
3	8 1/2	35	24	24	32
4	11 1/2	58	42	42	53
5	14 1/2	87	63	63	76
6	17 1/2	122	88	88	100

NOTES:
1. ALL CONNECTION ANGLES L4x3 1/2x5/16, ASTM A572 GR 50, N.S. & F.S.
2. ALL BOLTS ASTM A325-N, 3/4"ø.
3. ALL WELDS E70XX.
4. BOLT SPACING (S) = 3".
5. SHORT HORIZONTAL SLOTTED HOLES MAY BE USED.
6. WELD AT ERECTION ANGLE TO BE DETERMINED BY FABRICATOR/ERECTOR CONSIDERING MEMBER WEIGHTS AND ERECTION FORCES.

F S-401 TYPICAL DOUBLE ANGLE SHEAR CONNECTION DETAIL
NOT TO SCALE

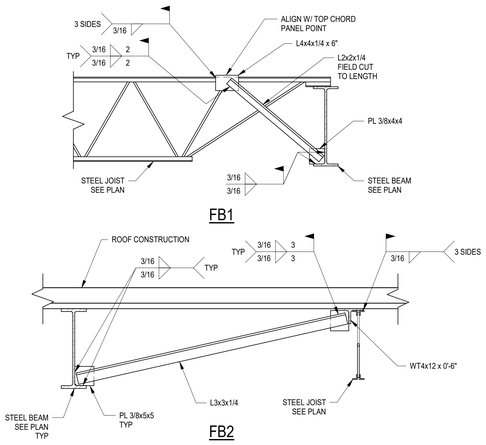

G S-401 TYPICAL FLANGE BRACE DETAIL
NOT TO SCALE

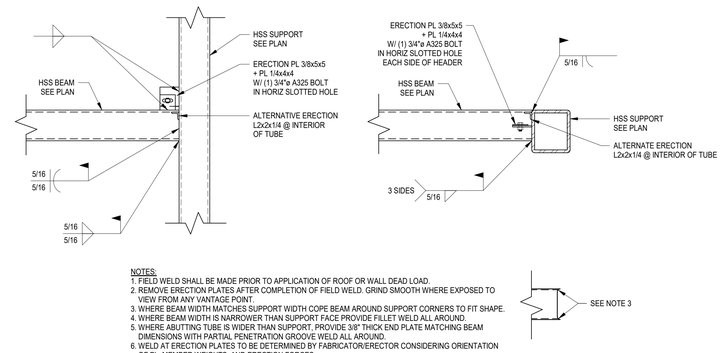

NOTES:
1. FIELD WELD SHALL BE MADE PRIOR TO APPLICATION OF ROOF OR WALL DEAD LOAD.
2. REMOVE ERECTION PLATES AFTER COMPLETION OF FIELD WELD. GRIND SMOOTH WHERE EXPOSED TO VIEW FROM ANY VANTAGE POINT.
3. WHERE BEAM WIDTH MATCHES SUPPORT WIDTH COPE BEAM AROUND SUPPORT CORNERS TO FIT SHAPE.
4. WHERE BEAM WIDTH IS NARROWER THAN SUPPORT FACE PROVIDE FILLET WELD ALL AROUND.
5. WHERE ABUTTING TUBE IS WIDER THAN SUPPORT, PROVIDE 3/8" THICK END PLATE MATCHING BEAM DIMENSIONS WITH PARTIAL PENETRATION GROOVE WELD ALL AROUND.
6. WELD AT ERECTION PLATES TO BE DETERMINED BY FABRICATOR/ERECTOR CONSIDERING ORIENTATION OF PL, MEMBER WEIGHTS, AND ERECTION FORCES.

H S-401 TYPICAL TUBE TO TUBE CONNECTION DETAIL
NOT TO SCALE

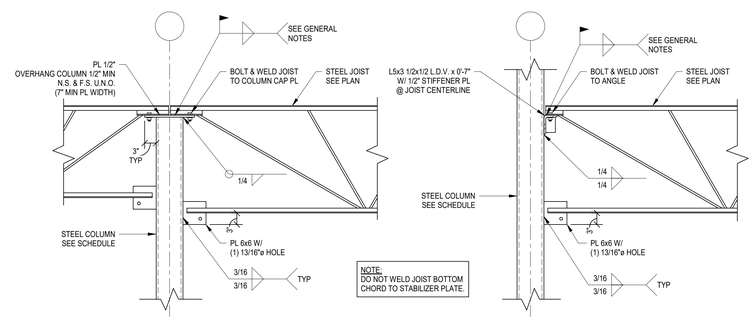

J S-401 TYPICAL JOIST SEAT ON COLUMN CAP / FACE DETAIL
NOT TO SCALE

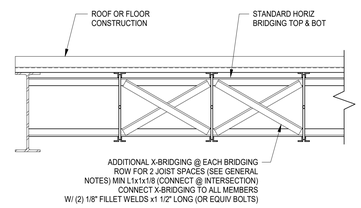

K S-401 TYPICAL JOIST BRIDGING AT EDGE BEAM DETAIL
NOT TO SCALE

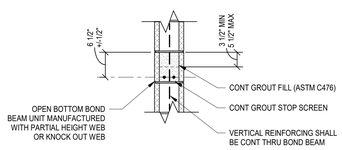

NOTES:
1. MORTAR WEBS OF BLOCK AT VERTICAL REINFORCING TO PREVENT GROUT FROM FLOWING INTO THE ADJACENT CELL.
2. UNLESS OTHERWISE SHOWN OR NOTED, REINFORCING SHALL BE PLACED IN THE BOTTOM OF THE BOND BEAM AS SHOWN IN THIS DETAIL. WHERE REINFORCING IS SHOWN OR NOTED TO BE IN THE TOP OF THE BOND BEAM, BAR LOCATION SHALL BE 6 1/2"± 1/2" FROM THE BOTTOM OF THE BOND BEAM AND THE BOND BEAM UNIT SHALL BE INVERTED SUCH THAT THE REMAINING WEB IS IN THE BOTTOM.
3. REINFORCING SHALL HAVE 1/2" MINIMUM GROUT COVER TO ALL C.M.U. SURFACES.
4. GROUT STOP SCREEN SHALL BE DUR-O-STOP AS MANUFACTURED BY DUR-O-WAL OR OTHER APPROVED EQUIVALENT.
5. USE LINTEL BLOCK WHERE BOND BEAM OCCURS DIRECTLY ABOVE WINDOW, DOOR OR LOUVER OPENING.

L S-401 TYPICAL C.M.U. BOND BEAM DETAIL
NOT TO SCALE

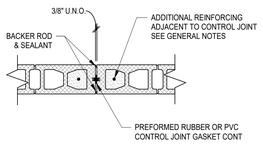

NOTES:
1. HORIZONTAL JOINT REINFORCING IN BLOCK AND BRICK SHALL BE DISCONTINUOUS AT CONTROL JOINTS.
2. SEE ARCHITECTURAL DRAWINGS FOR CONTROL JOINT LOCATIONS.
3. UNLESS OTHERWISE SHOWN OR NOTED, SPACING OF CONTROL JOINTS SHALL NOT EXCEED 25 FEET AT EXTERIOR WALLS AND 32 FEET AT INTERIOR WALLS.

M S-401 TYPICAL C.M.U. CONTROL JOINT DETAIL (C.J.)
NOT TO SCALE

JRA architects
3225 Summit Square Place, Suite 200
Lexington, Kentucky 40509
859.252.6781

NOT FOR CONSTRUCTION

BROWN+KUBICAN STRUCTURAL ENGINEERS
546 East Main Street, Suite 300
Lexington, KY 40508
859-543-0933
www.brownkubican.com

RFP 2 DRAWINGS

UK INDOOR TRACK FACILITY
UNIVERSITY OF KENTUCKY
700 SPORTS CENTER DRIVE LEXINGTON, KENTUCKY 40506

STRUCTURAL

PROJECT	202258
DATE	08/31/2022

REVISIONS

No.	Description	Date

JRA ARCHITECTS HAS RETAINED AN ELECTRONIC VERSION OF THESE DRAWINGS. THE CLIENT AGREES NOT TO REUSE THESE DRAWINGS - IN ELECTRONIC OR ANY OTHER FORMAT - IN WHOLE, OR IN PART, FOR ANY PURPOSE OTHER THAN FOR THE PROJECT. THE CLIENT AGREES NOT TO TRANSFER THESE ELECTRONIC FILES TO OTHERS WITHOUT THE PRIOR WRITTEN CONSENT OF THE ARCHITECT. THE CLIENT FURTHER AGREES TO WAIVE ALL CLAIMS AGAINST THE ARCHITECT RESULTING IN ANY WAY FROM ANY CHANGES MADE TO OR REUSE OF THE ELECTRONIC FILES FOR ANY OTHER PROJECT BY ANYONE OTHER THAN THE ARCHITECT.

TYPICAL FRAMING DETAILS

S-401

COPYRIGHT 2022 - JRA, INC.

C:_REVIT_Locals\22157 (UK INDOOR TRACK AND FIELD) STR - RVT21_anorberg28.RG.rvt
8/26/2022 3:09:51 PM

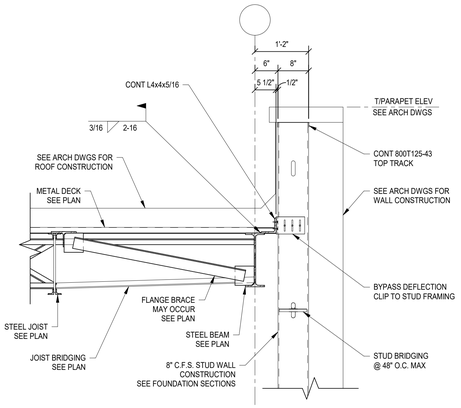

A S-402 SECTION
3/4" = 1'-0"

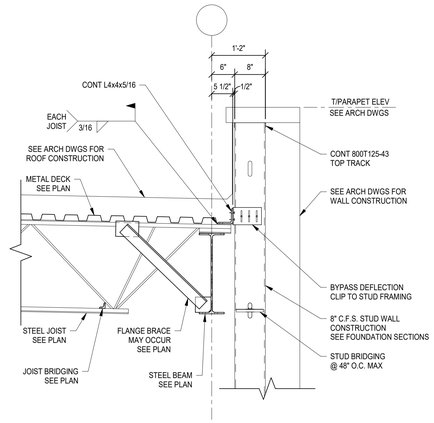

B S-402 SECTION
3/4" = 1'-0"

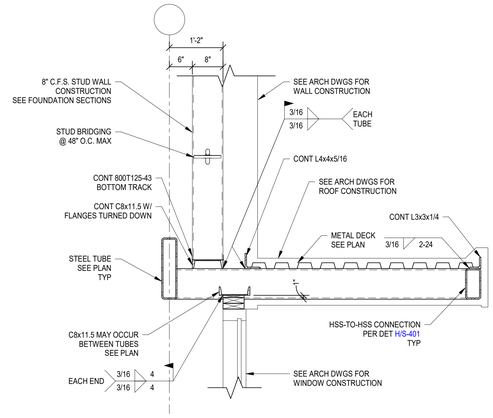

C S-402 SECTION
3/4" = 1'-0"

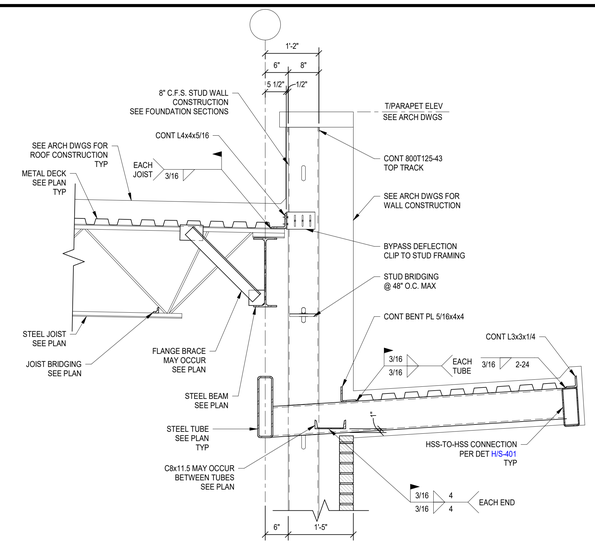

D S-402 SECTION
3/4" = 1'-0"

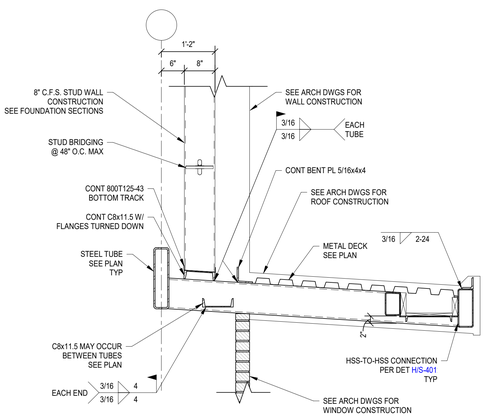

E S-402 SECTION
3/4" = 1'-0"

JRA architects
3225 Summit Square Place, Suite 200
Lexington, Kentucky 40509
859.252.6781

NOT FOR CONSTRUCTION

BROWN+KUBICAN
STRUCTURAL ENGINEERS
546 East Main Street, Suite 300
Lexington, KY 40508
859-543-0933
www.brownkubican.com

RFP 2 DRAWINGS

UK INDOOR TRACK FACILITY
UNIVERSITY OF KENTUCKY
700 SPORTS CENTER DRIVE LEXINGTON, KENTUCKY 40506

STRUCTURAL

PROJECT	202258
DATE	08/31/2022

REVISIONS

No.	Description	Date

JRA ARCHITECTS HAS RETAINED AN ELECTRONIC VERSION OF THESE DRAWINGS. THE CLIENT AGREES NOT TO REUSE THESE DRAWINGS - IN ELECTRONIC OR ANY OTHER FORMAT - IN WHOLE, OR IN PART, FOR ANY PURPOSE OTHER THAN FOR THE PROJECT. THE CLIENT AGREES NOT TO TRANSFER THESE ELECTRONIC FILES TO OTHERS WITHOUT THE PRIOR WRITTEN CONSENT OF THE ARCHITECT. THE CLIENT FURTHER AGREES TO WAIVE ALL CLAIMS AGAINST THE ARCHITECT RESULTING IN ANY WAY FROM ANY UNAUTHORIZED CHANGES TO OR REUSE OF THE ELECTRONIC FILES FOR ANY OTHER PROJECT BY ANYONE OTHER THAN THE ARCHITECT.

FRAMING SECTIONS

S-402

COPYRIGHT 2022 - JRA, INC.

C:_REVIT_Locals\22157 (UK INDOOR TRACK AND FIELD) STR - RVT21_anorberg28.RG.rvt
8/26/2022 3:09:51 PM

C:_REVIT_Locals\22157 (UK INDOOR TRACK AND FIELD) STR - RVT21_anorberg28.RG.rvt

STEEL COLUMN SCHEDULE

COLUMN BREAK ELEVATION														COLUMN BREAK ELEVATION
30'-0"														30'-0"
LOWER ROOF														LOWER ROOF
15'-0"	HSS8x8x3/8	HSS8x8x3/8	HSS8x8x3/8	HSS8x8x3/8	HSS8x8x3/8	HSS8x8x3/8	HSS8x8x3/8	HSS8x8x3/8	HSS8x8x3/8	HSS8x8x3/8	HSS8x8x3/8	HSS8x8x3/8	HSS8x8x3/8	15'-0"
FIRST FLOOR														FIRST FLOOR
0"														0"
BASE PLATE	1x16x16	1x16x16	1x16x16	1x16x16	1x16x16	1x13x16	1x16x16	1x16x16	1x16x16	1x16x16	1x13x16	1x16x16	1x16x16	
ANCHOR RODS	(4) 3/4"ø	(4) 3/4"ø	(4) 3/4"ø	(4) 3/4"ø	(4) 3/4"ø	(4) 3/4"ø	(4) 3/4"ø	(4) 3/4"ø	(4) 3/4"ø	(4) 3/4"ø	(4) 3/4"ø	(4) 3/4"ø	(4) 3/4"ø	
BASE PL TYPE	A	A	A	A	A	B	A	A	A	A	B	A	A	
CAP PLATE	1/2"	1/2"	1/2"	1/2"	1/2"	1/2"	1/2"	1/2"	1/2"	1/2"	1/2"	1/2"	1/2"	
NOTES														
Column Locations	A-1	A-2	B-1	B-2	B-3	B-4	C-1	D-1	D-1.9	D-3	D-4	TJ-1	TJ-2	

COLUMN SCHEDULE NOTES:
1. SEE PLAN FOR TOP OF FOUNDATION OR PIER ELEVATION.
2. SP = COLUMN SPLICE. SEE DETAIL A/S-501.
3. CONTRACTOR MAY SUBMIT ALTERNATE COLUMN SPLICE LOCATIONS FOR REVIEW BY ENGINEER.
4. SEE DETAIL A/S-501 FOR BASE PLATE INFORMATION.
5. CAP PLATES SHALL BE WELDED TO COLUMN WITH ALL-AROUND SEAL WELD U.N.O.
6. WHERE COLUMN EXTENDS TO UNDERSIDE OF ROOF DECK, SLOPE TOP OF COLUMN TO MATCH ROOF DECK SLOPE.
7. COORDINATE BOTTOM OF BASE PLATE ELEVATION WITH SUPPORTING FOUNDATION ELEMENT ELEVATION GIVEN ON PLAN (FOOTING, PIER, PIER CAP, OR GRADE BEAM) & DETAIL A/S-501.
8. WHERE TOP OF COLUMN ENDS AT FLOOR LEVEL (SLAB ON DECK CONSTRUCTION) TOP OF COLUMN SHALL MATCH TOP OF ADJACENT STEEL BEAM FRAMING ELEVATION. WHERE TOP OF COLUMN ENDS AT ROOF LEVEL (DECK ON STEEL FRAMING) COORDINATE TOP OF COLUMN ELEVATION WITH ELEVATIONS NOTED ON PLAN & FRAMING SECTIONS.
9. COORDINATE WITH PLANS AND MOMENT CONNECTION SCHEDULE FOR CAP PLATE DIM & PLATE ELEVATION WHERE MOMENT CONNECTION OCCURS AT TOP OF COLUMN.
10. COORDINATE WITH DETAIL A/S-501 FOR CAP PLATE CONDITION WHERE STEEL JOIST BEARS ON TOP OF COLUMN.

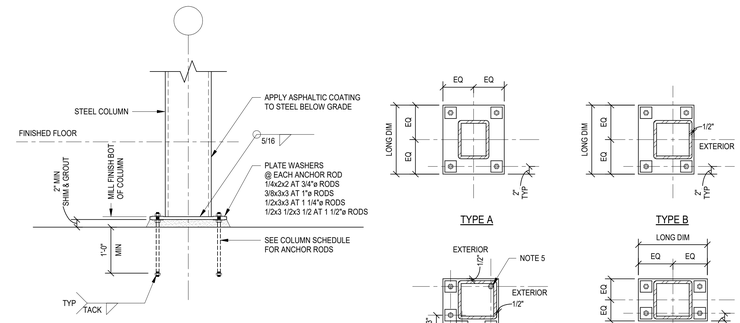

NOTES:
1. GROUT SHALL BE 8,000 P.S.I. NON-SHRINK, NON-METALLIC GROUT.
2. LEVELING PLATES ARE OPTIONAL.
3. ANCHOR RODS SHALL BE ASTM F1554 ROD WITH NUTS AND WASHERS AS SHOWN. WELD BOTTOM NUT (BELOW) TO ANCHOR ROD PRIOR TO INSTALLING ROD.
4. HOLES IN BASE PLATES SHALL BE 5/16" OVERSIZE, UNLESS NOTED OTHERWISE.
5. ANCHOR ROD BELOW COLUMN INTENDED FOR VERTICAL SUPPORT DURING ERECTION ONLY. NO TOP NUT/WASHER NEED BE PROVIDED (BASE PL TYPE C).
6. LONG DIMENSION OF BASE PLATE SHALL BE PARALLEL TO LONG DIMENSION OF HSS COLUMN, UNLESS NOTED OTHERWISE.

B / S-501 TYPICAL STEEL COLUMN BASE PLATE SETTING DETAIL
NOT TO SCALE

JRA architects
3225 Summit Square Place, Suite 200
Lexington, Kentucky 40509
859.252.6781

NOT FOR CONSTRUCTION

BROWN+KUBICAN STRUCTURAL ENGINEERS
546 East Main Street, Suite 300
Lexington, KY 40508
859-543-0933
www.brownkubican.com

RFP 2 DRAWINGS

UK INDOOR TRACK FACILITY
UNIVERSITY OF KENTUCKY
700 SPORTS CENTER DRIVE LEXINGTON, KENTUCKY 40506

STRUCTURAL

PROJECT	202258
DATE	08/31/2022

REVISIONS

No.	Description	Date

JRA ARCHITECTS HAS RETAINED AN ELECTRONIC VERSION OF THESE DRAWINGS. THE CLIENT AGREES NOT TO REUSE THESE DRAWINGS - IN ELECTRONIC OR ANY OTHER FORMAT - IN WHOLE, OR IN PART, FOR ANY PURPOSE OTHER THAN FOR THE PROJECT. THE CLIENT AGREES NOT TO TRANSFER THESE ELECTRONIC FILES TO OTHERS WITHOUT THE PRIOR WRITTEN CONSENT OF THE ARCHITECT. THE CLIENT FURTHER AGREES TO WAIVE ALL CLAIMS AGAINST THE ARCHITECT RESULTING IN ANY WAY FROM ANY UNAUTHORIZED CHANGES TO OR REUSE OF THE ELECTRONIC FILES FOR ANY OTHER PROJECT BY ANYONE OTHER THAN THE ARCHITECT.

STEEL COLUMN SCHEDULE

S-501

COPYRIGHT 2022 - JRA, INC.

8/26/2022 3:09:52 PM

C:_REVIT_Locals\22157 (UK INDOOR TRACK AND FIELD) STR - RVT21_anorberg28.RG.rvt

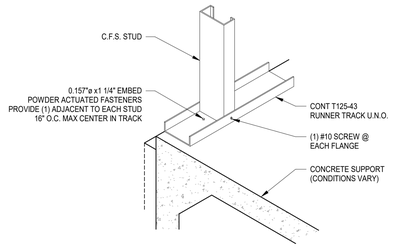

A S-601 TYPICAL WALL BASE AT FOUNDATION/SLAB
NOT TO SCALE

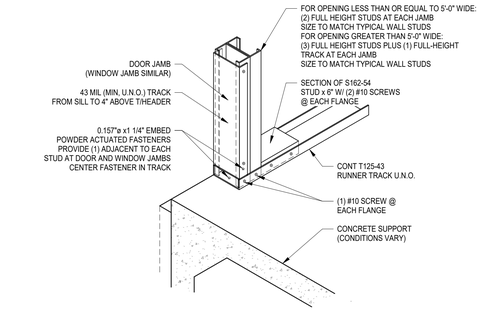

B S-601 TYPICAL WINDOW/DOOR JAMB BASE AT FOUNDATION/SLAB
NOT TO SCALE

TABLE 1	
STUD DEPTH	CONNECTOR
6"	CLARKDIETRICH SWIFTCLIP LS545
3-5/8"	CLARKDIETRICH SWIFTCLIP LS543
OTHER	1-1/2" x 1-1/2" x 16GA (50ksi) CLIP ANGLE, LENGTH: 1/2" LESS THAN STUD DEPTH

TABLE 2	
STUD THICKNESS	CONNECTOR
33 - 43 MIL	CLARKDIETRICH FB-43
54 - 97 MIL	CLARKDIETRICH FB-68
33 - 97 MIL	The Steel Network BC-43
33 - 97 MIL	SIMPSON SUBH3.25

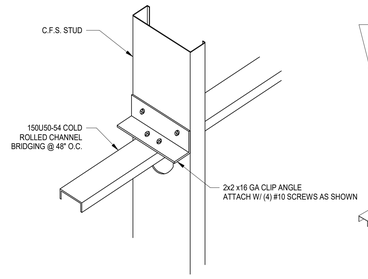

OPTION 1

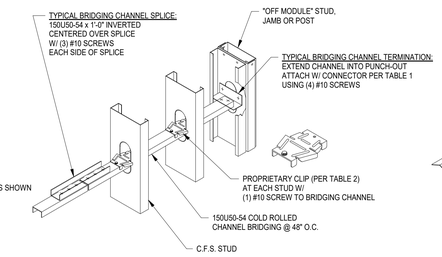

OPTION 2 & TYPICAL BRIDGING SPLICE

STUDS 6" DEEP OR LESS

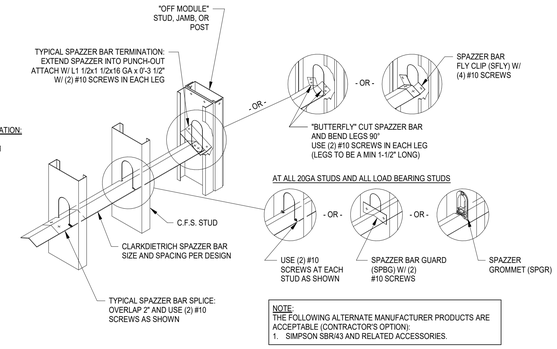

NOTE:
THE FOLLOWING ALTERNATE MANUFACTURER PRODUCTS ARE ACCEPTABLE (CONTRACTOR'S OPTION):
1. SIMPSON SBR/43 AND RELATED ACCESSORIES.

OPTION 3

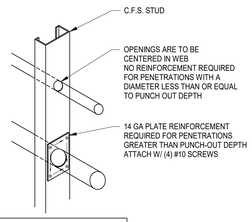

NOTE:
FLANGES SHALL NOT BE NOTCHED OR CUT.

D S-601 STUD PENETRATION DETAIL
NOT TO SCALE

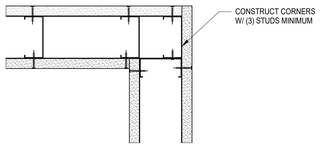

CORNER FRAMING

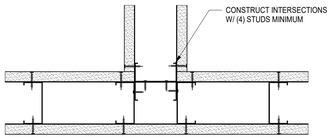

WALL INTERSECTION FRAMING

E S-601 CORNER AND WALL INTERSECTION FRAMING
NOT TO SCALE

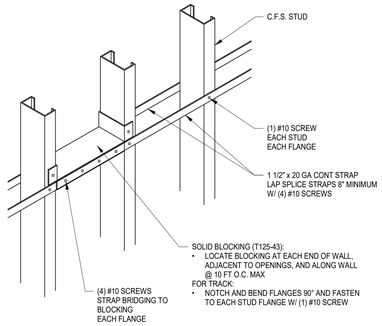

STUDS GREATER THAN 6" DEEP
(INSTALL BRIDGING @ 48" O.C. VERTICALLY MAX)

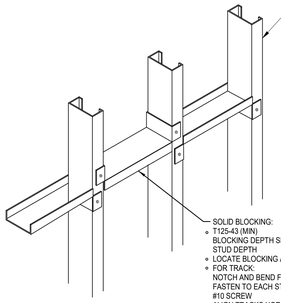

NOTES:
1. USE SOLID BLOCKING BETWEEN OPENINGS SEPARATED BY 4'-0" OR LESS OF SOLID WALL.
2. CONTRACTOR'S OPTION TO USE SOLID BLOCKING ELSEWHERE (IN LIEU OF OTHER STUD BRIDGING METHODS).

C S-601 CFSF03 STUD BRIDGING DETAIL
NOT TO SCALE

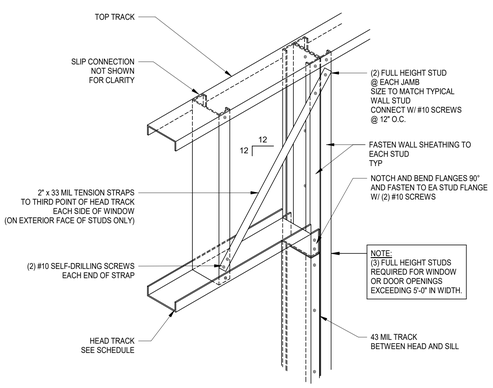

F S-601 JAMB & HEAD DETAIL
3/4" = 1'-0"

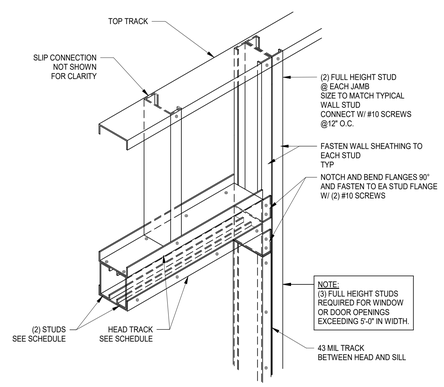

G S-601 JAMB & HEADER DETAIL
NOT TO SCALE

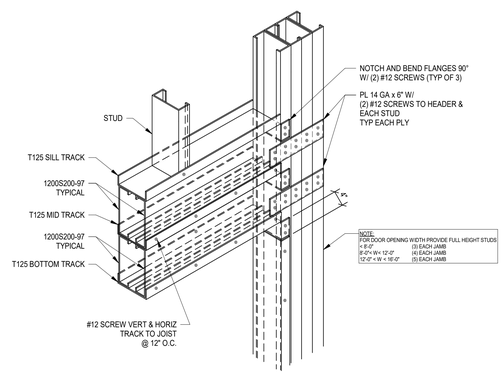

H S-601 JAMB & HEADER DETAIL
NOT TO SCALE

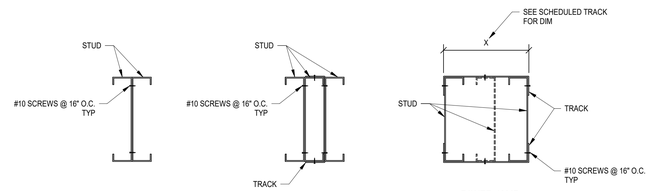

TWO-STUDS

THREE-STUDS + ONE-TRACK

BOXED JAMB
(TWO-STUDS + TWO TRACKS, MIN ADDITIONAL STUDS MAY OCCUR)

NOTES:
1. WHERE JAMB OCCURS IN EXTERIOR BUILDING WALL, STUFF CONCEALED SPACES WITH SPECIFIED BATT INSULATION PRIOR TO CLOSING OUT SHAPE.
2. SEE HEADER SCHEDULE FOR STUD AND TRACK JAMB MEMBER SIZES.

J S-601 TYPICAL BUILT-UP JAMB DETAIL
NOT TO SCALE

JRA architects
3225 Summit Square Place, Suite 200
Lexington, Kentucky 40509
859.252.6781

NOT FOR CONSTRUCTION

BROWN+KUBICAN
STRUCTURAL ENGINEERS
546 East Main Street, Suite 300
Lexington, KY 40508
859-543-0933
www.brownkubican.com

RFP 2 DRAWINGS

UK INDOOR TRACK FACILITY
UNIVERSITY OF KENTUCKY
700 SPORTS CENTER DRIVE LEXINGTON, KENTUCKY 40506

STRUCTURAL

PROJECT	202258
DATE	08/31/2022

REVISIONS

No.	Description	Date

JRA ARCHITECTS HAS RETAINED AN ELECTRONIC VERSION OF THESE DRAWINGS. THE CLIENT AGREES NOT TO REUSE THESE DRAWINGS - IN ELECTRONIC OR ANY OTHER FORMAT - IN WHOLE, OR IN PART, FOR ANY PURPOSE OTHER THAN FOR THIS PROJECT. THE CLIENT AGREES NOT TO TRANSFER THESE ELECTRONIC FILES TO OTHERS WITHOUT THE PRIOR WRITTEN CONSENT OF THE ARCHITECT. THE CLIENT FURTHER AGREES TO WAIVE ALL CLAIMS AGAINST THE ARCHITECT RESULTING IN ANY WAY FROM ANY UNAUTHORIZED CHANGES TO OR REUSE OF THE ELECTRONIC FILES FOR ANY OTHER PROJECT BY ANYONE OTHER THAN THE ARCHITECT.

TYPICAL COLD-FORMED STEEL DETAILS

S-601

COPYRIGHT 2022 - JRA, INC.

8/26/2022 3:09:53 PM

C:_REVIT_Locals\22157 (UK INDOOR TRACK AND FIELD) STR - RVT21_anorberg28.RG.rvt

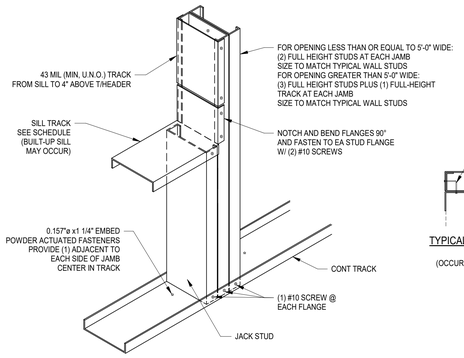

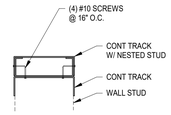

TYPICAL BUILT-UP SILL DETAIL
(SECTION VIEW)
(OCCURS ONLY WHERE INDICATED)

K S-602 TYPICAL JAMB & SILL DETAIL
NOT TO SCALE

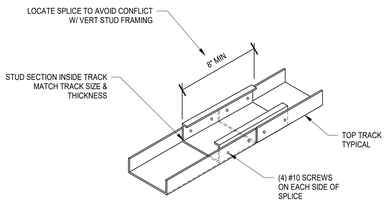

NOTE:
1. SILL SPLICE NOT REQUIRED FOR SILL TRACK FASTENED TO CONCRETE OR STRUCTURAL STEEL SUPPORT WITH (1) P.A.F. WITHIN 4"x2" FROM END OF MEMBER ON EACH SIDE OF JOINT.

L S-602 TYPICAL TOP TRACK SPLICE DETAIL
NOT TO SCALE

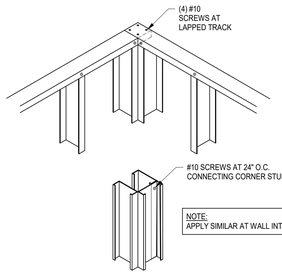

NOTE:
APPLY SIMILAR AT WALL INTERSECTIONS.

M S-602 TYPICAL TOP TRACK AT CORNER DETAIL
NOT TO SCALE

LOCATION	MATERIAL AND SPACING
EXTERIOR WALL STUDS	600S162-43 @ 16" O.C.
FULL HEIGHT JAMB STUDS (5'-0" WIDE OPENING OR SMALLER)	(2) 600S162-43
FULL HEIGHT JAMB STUDS (OPENING WIDER THAN 5'-0")	(2) 600S162-43 + (1) 600T125-43
HEAD (5'-0" WIDE OPENING OR SMALLER)	(1) 600T125-43
HEAD (OPENING WIDER THAN 5'-0")	(2) 600S162-43 + (2) 600T125-43
SILL	600T125-43

N S-602 COLD-FORMED METAL FRAMING SCHEDULE
NOT TO SCALE

JRA architects
3225 Summit Square Place, Suite 200
Lexington, Kentucky 40509
859.252.6781

NOT FOR CONSTRUCTION

BROWN+KUBICAN
STRUCTURAL ENGINEERS
546 East Main Street, Suite 300
Lexington, KY 40508
859-543-0933
www.brownkubican.com

RFP 2 DRAWINGS

UK INDOOR TRACK FACILITY
UNIVERSITY OF KENTUCKY
700 SPORTS CENTER DRIVE LEXINGTON, KENTUCKY 40506

STRUCTURAL

PROJECT	202258
DATE	08/31/2022

REVISIONS

No.	Description	Date

JRA ARCHITECTS HAS RETAINED AN ELECTRONIC VERSION OF THESE DRAWINGS. THE CLIENT AGREES NOT TO REUSE THESE DRAWINGS - IN ELECTRONIC OR ANY OTHER FORMAT - IN WHOLE, OR IN PART, FOR ANY PURPOSE OTHER THAN FOR THE PROJECT. THE CLIENT AGREES NOT TO TRANSFER THESE ELECTRONIC FILES TO OTHERS WITHOUT THE PRIOR WRITTEN CONSENT OF THE ARCHITECT. THE CLIENT FURTHER AGREES TO WAIVE ALL CLAIMS AGAINST THE ARCHITECT RESULTING IN ANY WAY FROM ANY CHANGES OR ADDITIONS TO OR REUSE OF THE ELECTRONIC FILES FOR ANY OTHER PROJECT BY ANYONE OTHER THAN THE ARCHITECT.

TYPICAL
COLD-FORMED
STEEL DETAILS

S-602

COPYRIGHT 2022 - JRA, INC.

8/26/2022 3:09:53 PM

C:\Users\lburnett\OneDrive - JRA Architects\Documents\202258 - UK Indoor Track_lburnettNA4L5.rvt

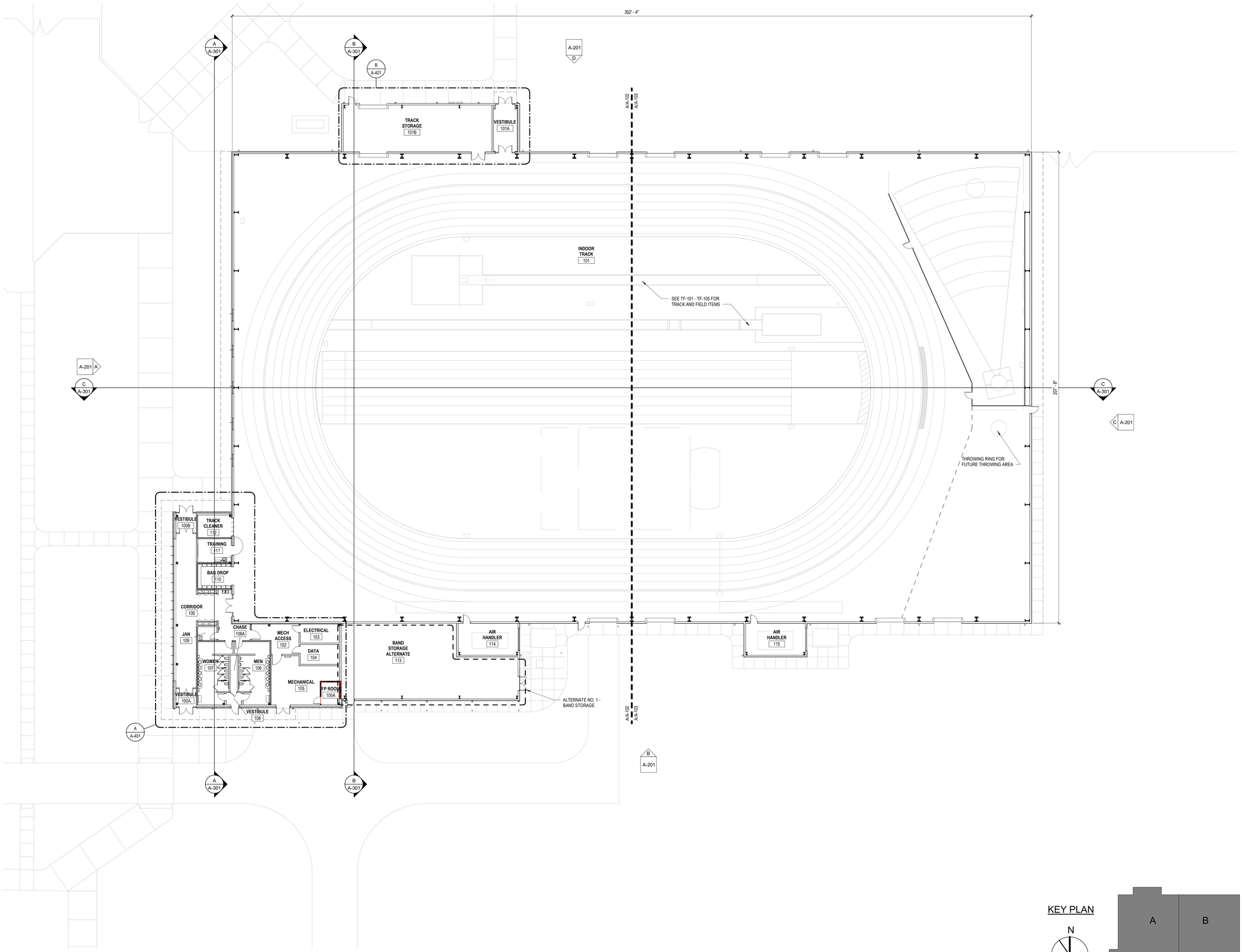

A OVERALL FIRST FLOOR PLAN
1/16" = 1'-0"

KEY PLAN

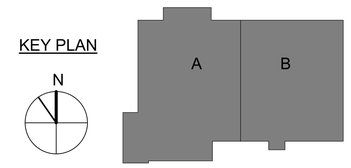

JRA architects
3225 Summit Square Place, Suite 200
Lexington, Kentucky 40509
859.252.6781

NOT FOR CONSTRUCTION

RESERVED FOR AHJ STAMP

RFP 2 DRAWINGS

UK INDOOR TRACK FACILITY

UNIVERSITY OF KENTUCKY
700 SPORTS CENTER DRIVE LEXINGTON, KENTUCKY 40506

ARCHITECTURAL

PROJECT	202258
DATE	08/31/2022

REVISIONS

No.	Description	Date

JRA ARCHITECTS HAS RETAINED AN ELECTRONIC VERSION OF THESE DRAWINGS. THE CLIENT AGREES NOT TO REUSE THESE DRAWINGS - IN ELECTRONIC OR ANY OTHER FORMAT - IN WHOLE, OR IN PART, FOR ANY PURPOSE OTHER THAN FOR THE PROJECT. THE CLIENT AGREES NOT TO TRANSFER THESE ELECTRONIC FILES TO OTHERS WITHOUT THE PRIOR WRITTEN CONSENT OF THE ARCHITECT. THE CLIENT FURTHER AGREES TO WAIVE ALL CLAIMS AGAINST THE ARCHITECT RESULTING IN ANY WAY FROM ANY CHANGES OR ALTERATIONS TO OR REUSE OF THE ELECTRONIC FILES FOR ANY OTHER PROJECT BY ANYONE OTHER THAN THE ARCHITECT.

OVERALL FLOOR PLAN

A-101

COPYRIGHT 2022 - JRA, INC.

9/2/2022 3:22:40 PM

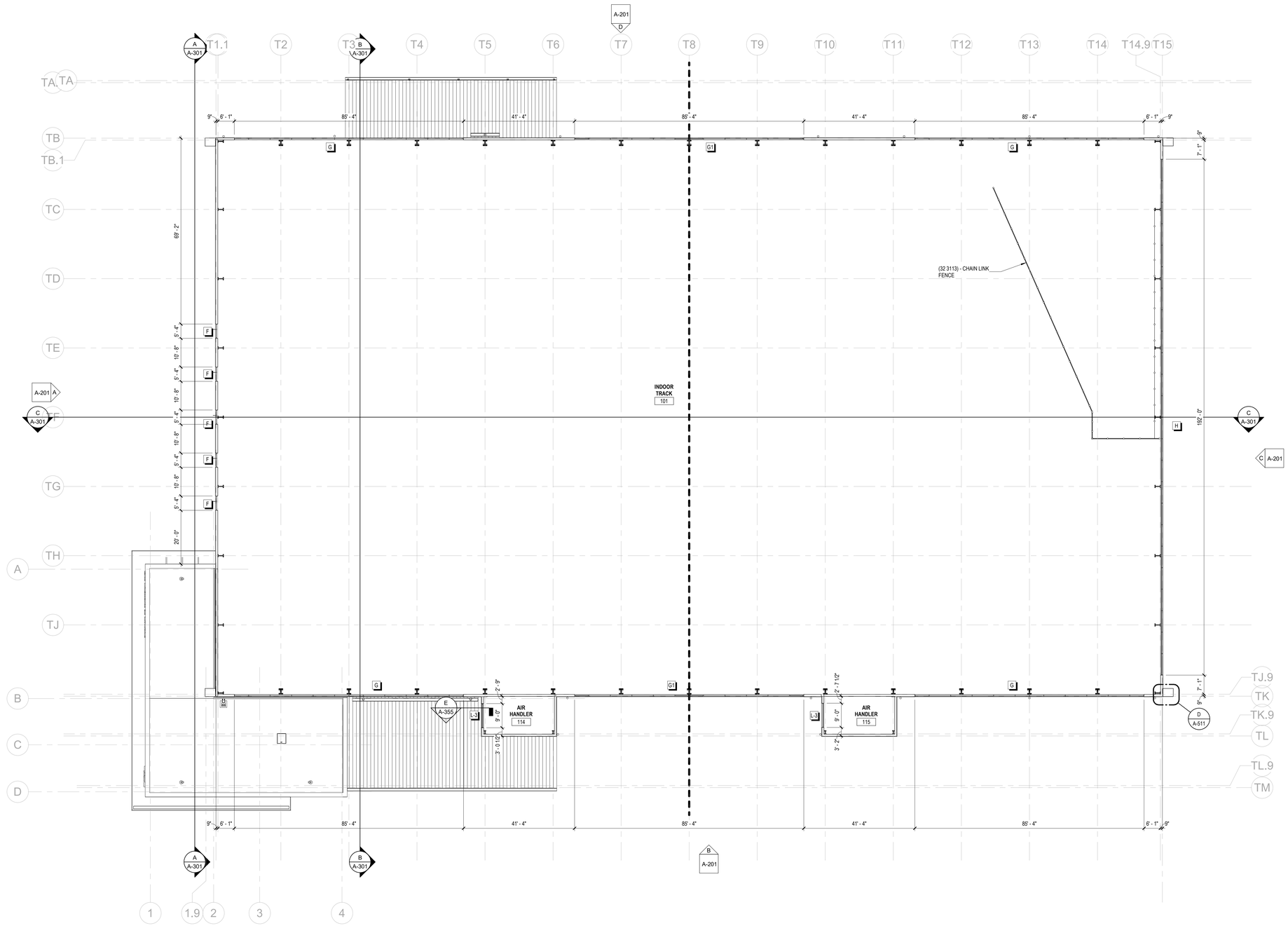

A HIGH WINDOWS FLOOR PLAN
1/16" = 1'-0"

KEY PLAN

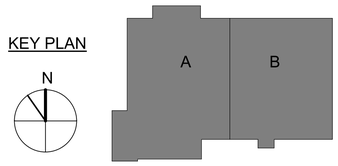

JRA architects
3225 Summit Square Place, Suite 200
Lexington, Kentucky 40509
859.252.6781

NOT FOR CONSTRUCTION

RESERVED FOR AHJ STAMP

RFP 2 DRAWINGS

UK INDOOR TRACK FACILITY

UNIVERSITY OF KENTUCKY
700 SPORTS CENTER DRIVE LEXINGTON, KENTUCKY 40506

ARCHITECTURAL

PROJECT	202258
DATE	08/31/2022

REVISIONS

No.	Description	Date

JRA ARCHITECTS HAS RETAINED AN ELECTRONIC VERSION OF THESE DRAWINGS. THE CLIENT AGREES NOT TO REUSE THESE DRAWINGS - IN ELECTRONIC OR ANY OTHER FORMAT - IN WHOLE, OR IN PART, FOR ANY PURPOSE OTHER THAN FOR THE PROJECT. THE CLIENT AGREES NOT TO TRANSFER THESE ELECTRONIC FILES TO OTHERS WITHOUT THE PRIOR WRITTEN CONSENT OF THE ARCHITECT. THE CLIENT FURTHER AGREES TO WAIVE ALL CLAIMS AGAINST THE ARCHITECT RESULTING IN ANY WAY FROM ANY UNAUTHORIZED CHANGES TO OR REUSE OF THE ELECTRONIC FILES FOR ANY OTHER PROJECT BY ANYONE OTHER THAN THE ARCHITECT.

HIGH WINDOWS FLOOR PLAN

A-101A

COPYRIGHT 2022 - JRA, INC.

C:\Users\lburnett\OneDrive - JRA Architects\Documents\202258 - UK Indoor Track_lburnettAN4L5.rvt
9/2/2022 3:22:42 PM

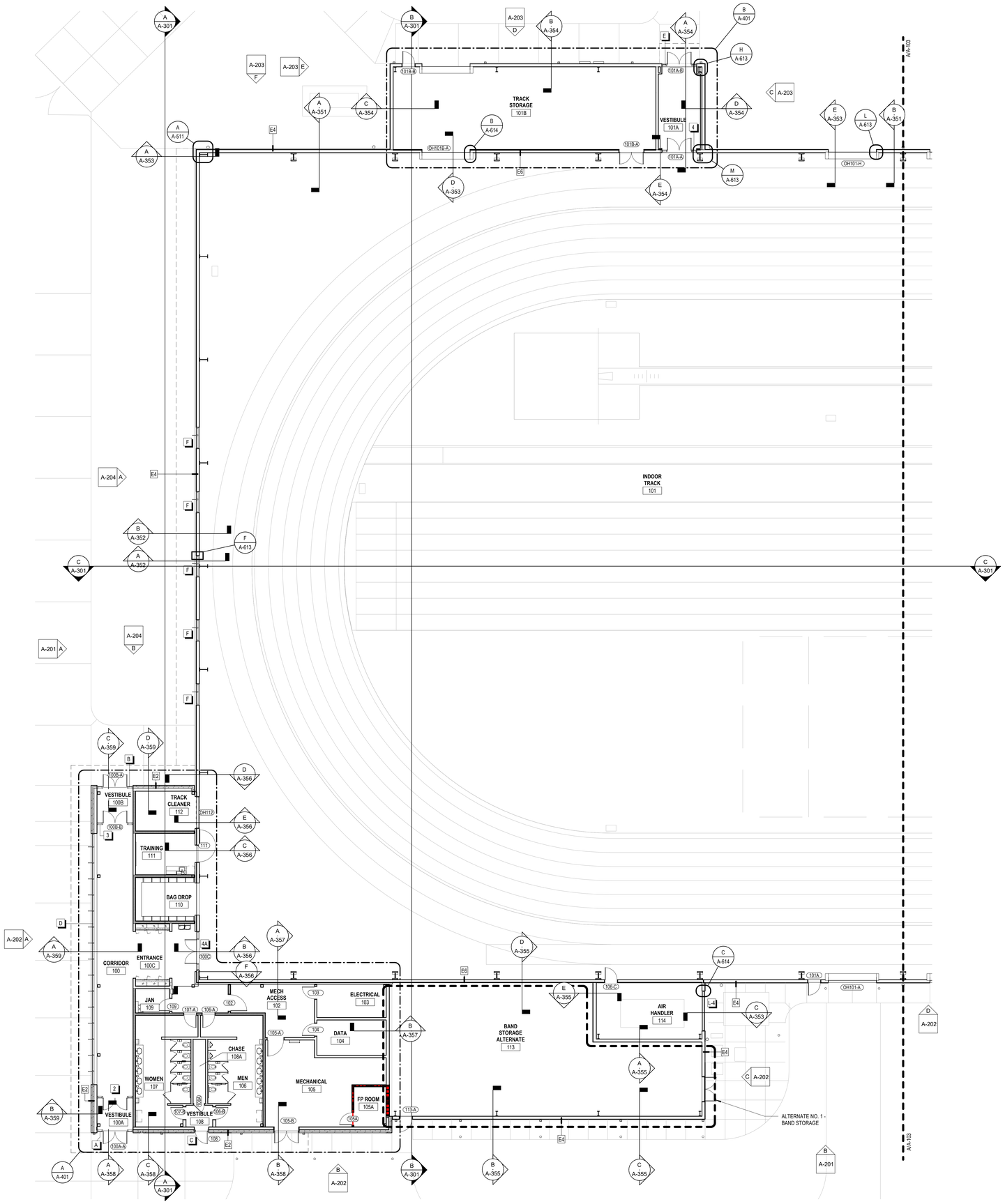

A FIRST FLOOR PLAN CALLOUT - AREA A
3/32" = 1'-0"

	SPECIALTIES & EQUIPMENT SCHEDULE		
MARK	DESCRIPTION	PROVIDED BY	COMMENTS
10 1100 - VISUAL DISPLAY SURFACES			
MB1	MARKER BOARD	C.F.C.I.	
10 2600 - WALL & DOOR PROTECTION			
W1	CORNER GUARD	C.F.C.I.	
10 2800 - TOILET ACCESSORY			
T01	GRAB BAR SET: 36" BACK, 42" SIDE, 18" VERTICAL	C.F.C.I.	
T02	TOILET PAPER DISPENSER - DOUBLE ROLL	O.F.C.I.	
T03	SANITARY NAPKIN DISPOSAL - PARTITION MOUNTED	C.F.C.I.	
T04	SANITARY NAPKIN DISPOSAL - RECESSED	C.F.C.I.	
T05	FRAMELESS MIRROR	C.F.C.I.	
T06	SOAP DISPENSER - SURFACE MOUNTED, VERTICAL	O.F.C.I.	
T07	PAPER TOWEL DISPENSER	O.F.C.I.	
T08	BABY CHANGING STATION	C.F.C.I.	
T09	UTILITY SHELF WITH MOP AND BROOM HOLDER	C.F.C.I.	
10 4313 - LIFE SAFETY CABINETS			
D1	DEFIBRILLATOR CABINET		
10 4413 - FIRE EQUIPMENT			
F1	SEMI-RECESSED FIRE EXTINGUISHER CABINET	C.F.C.I.	
F5	KNOX BOX	C.F.C.I.	
EQUIPMENT			
O1	ICE MACHINE	O.F.O.I.	

JRA architects
3225 Summit Square Place, Suite 200
Lexington, Kentucky 40509
859.252.6781

NOT FOR CONSTRUCTION

RESERVED FOR AHJ STAMP

RFP 2 DRAWINGS

UK INDOOR TRACK FACILITY

UNIVERSITY OF KENTUCKY
700 SPORTS CENTER DRIVE LEXINGTON, KENTUCKY 40506

ARCHITECTURAL

PROJECT	202258
DATE	08/31/2022

REVISIONS

No.	Description	Date

JRA ARCHITECTS HAS RETAINED AN ELECTRONIC VERSION OF THESE DRAWINGS. THE CLIENT AGREES NOT TO REUSE THESE DRAWINGS - IN ELECTRONIC OR ANY OTHER FORMAT - IN WHOLE, OR IN PART, FOR ANY PURPOSE OTHER THAN FOR THE PROJECT. THE CLIENT AGREES NOT TO TRANSFER THESE ELECTRONIC FILES TO OTHERS WITHOUT THE PRIOR WRITTEN CONSENT OF THE ARCHITECT. THE CLIENT FURTHER AGREES TO WAIVE ALL CLAIMS AGAINST THE ARCHITECT RESULTING IN ANY WAY FROM ANY UNAUTHORIZED CHANGES TO OR REUSE OF THE ELECTRONIC FILES FOR ANY OTHER PROJECT BY ANYONE OTHER THAN THE ARCHITECT.

FIRST FLOOR PLAN CALLOUTS - AREA A

A-102

COPYRIGHT 2022 - JRA, INC.

KEY PLAN

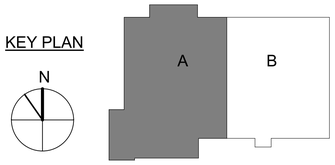

C:\Users\lburnett\OneDrive - JRA Architects\Documents\202258 - UK Indoor Track_lburnettAN4L5.rvt
9/2/2022 3:22:45 PM

C:\Users\lburnett\OneDrive - JRA Architects\Documents\202258 - UK Indoor Track_lburnettNAL5.rvt

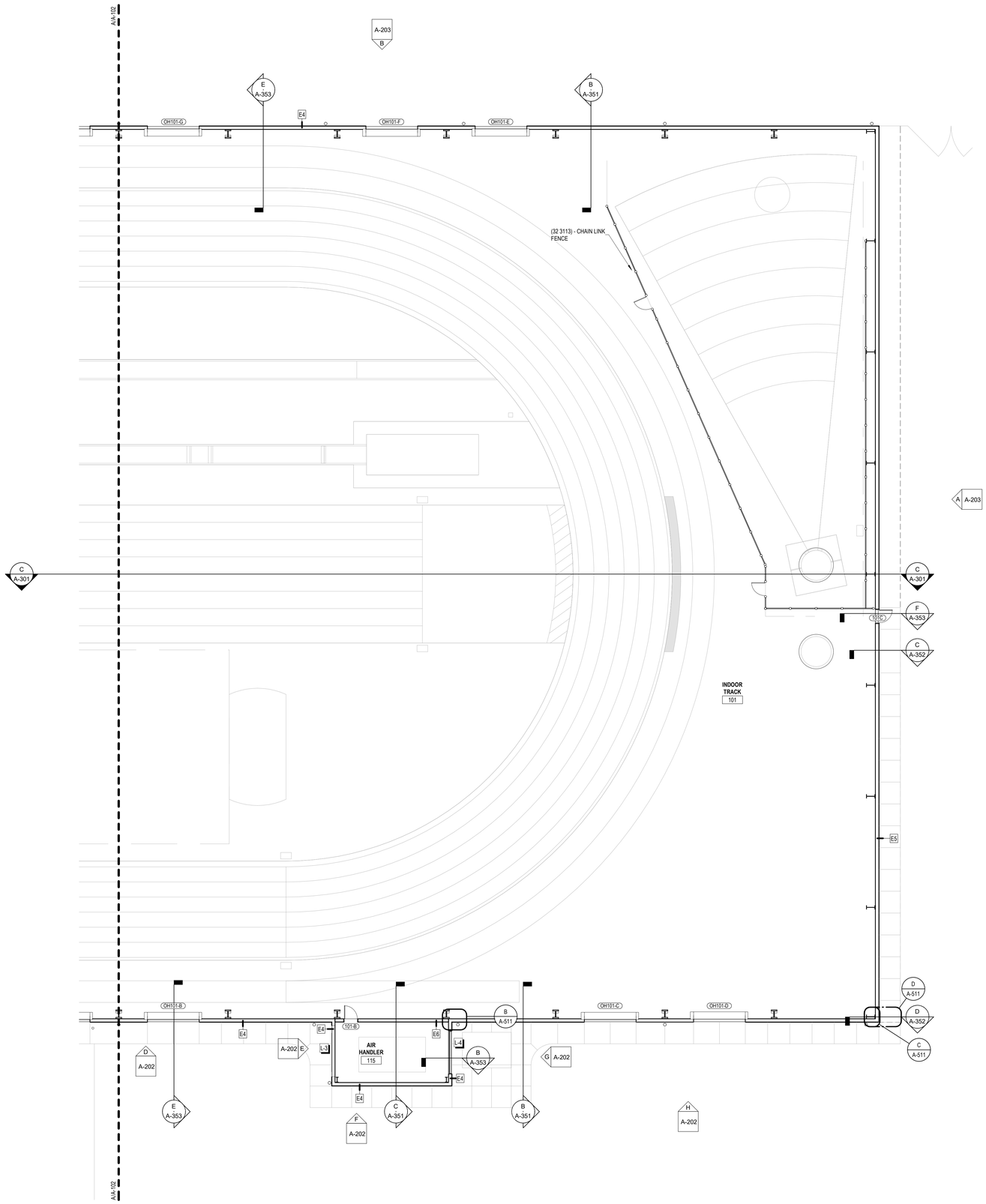

A FIRST FLOOR PLAN CALLOUT - AREA B

3/32" = 1'-0"

SPECIALTIES & EQUIPMENT SCHEDULE

MARK	DESCRIPTION	PROVIDED BY	COMMENTS
10 1100 - VISUAL DISPLAY SURFACES			
MB1	MARKER BOARD	C.F.C.I.	
10 2600 - WALL & DOOR PROTECTION			
W1	CORNER GUARD	C.F.C.I.	
10 2800 - TOILET ACCESSORY			
T01	GRAB BAR SET: 36" BACK, 42" SIDE, 18" VERTICAL	C.F.C.I.	
T02	TOILET PAPER DISPENSER - DOUBLE ROLL	O.F.C.I.	
T03	SANITARY NAPKIN DISPOSAL - PARTITION MOUNTED	C.F.C.I.	
T04	SANITARY NAPKIN DISPOSAL - RECESSED	C.F.C.I.	
T05	FRAMELESS MIRROR	C.F.C.I.	
T06	SOAP DISPENSER - SURFACE MOUNTED, VERTICAL	O.F.C.I.	
T07	PAPER TOWEL DISPENSER	O.F.C.I.	
T08	BABY CHANGING STATION	C.F.C.I.	
T09	UTILITY SHELF WITH MOP AND BROOM HOLDER	C.F.C.I.	
10 4313 - LIFE SAFETY CABINETS			
D1	DEFIBRILLATOR CABINET		
10 4413 - FIRE EQUIPMENT			
F1	SEMI-RECESSED FIRE EXTINGUISHER CABINET	C.F.C.I.	
F5	KNOX BOX	C.F.C.I.	
EQUIPMENT			
O1	ICE MACHINE	O.F.O.I.	

KEY PLAN

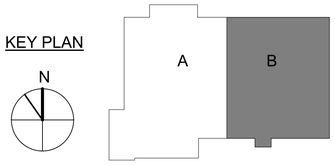

JRA architects
3225 Summit Square Place, Suite 200
Lexington, Kentucky 40509
859.252.6781

NOT FOR CONSTRUCTION

RESERVED FOR AHJ STAMP

RFP 2 DRAWINGS

UK INDOOR TRACK FACILITY

UNIVERSITY OF KENTUCKY
700 SPORTS CENTER DRIVE LEXINGTON, KENTUCKY 40506

ARCHITECTURAL

PROJECT	202258
DATE	08/31/2022

REVISIONS

No.	Description	Date

JRA ARCHITECTS HAS RETAINED AN ELECTRONIC VERSION OF THESE DRAWINGS. THE CLIENT AGREES NOT TO REUSE THESE DRAWINGS - IN ELECTRONIC OR ANY OTHER FORMAT - IN WHOLE, OR IN PART, FOR ANY PURPOSE OTHER THAN FOR THE PROJECT. THE CLIENT AGREES NOT TO TRANSFER THESE ELECTRONIC FILES TO OTHERS WITHOUT THE PRIOR WRITTEN CONSENT OF THE ARCHITECT. THE CLIENT FURTHER AGREES TO WAIVE ALL CLAIMS AGAINST THE ARCHITECT RESULTING IN ANY WAY FROM ANY CHANGES OR ADDITIONS TO OR REUSE OF THE ELECTRONIC FILES FOR ANY OTHER PROJECT BY ANYONE OTHER THAN THE ARCHITECT.

FIRST FLOOR PLAN CALLOUTS - AREA B

A-103

COPYRIGHT 2022 - JRA, INC.

9/2/2022 3:22:46 PM

C:\Users\lburnett\OneDrive - JRA Architects\Documents\202258 - UK Indoor Track_lburnettNAL5.rvt

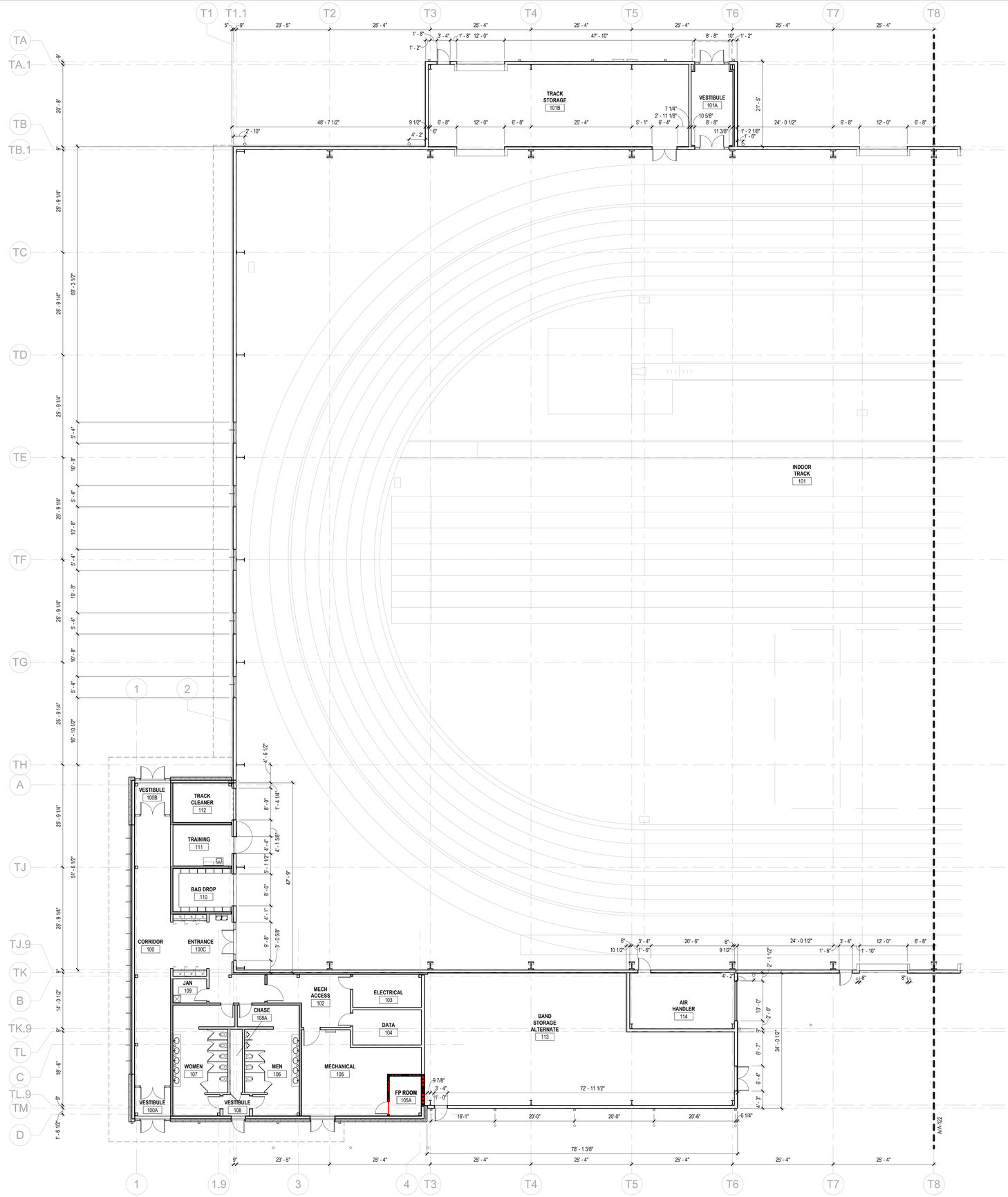

A DIMENSION FIRST FLOOR AREA A
3/32" = 1'-0"

9/2/2022 3:22:48 PM

JRA architects
3225 Summit Square Place, Suite 200
Lexington, Kentucky 40509
859.252.6781

NOT FOR CONSTRUCTION

RESERVED FOR AHJ STAMP

RFP 2 DRAWINGS

UK INDOOR TRACK FACILITY

UNIVERSITY OF KENTUCKY
700 SPORTS CENTER DRIVE LEXINGTON, KENTUCKY 40506

ARCHITECTURAL

PROJECT	202258
DATE	08/31/2022

REVISIONS

No.	Description	Date

JRA ARCHITECTS HAS RETAINED AN INTERESTING VERSION OF THESE DRAWINGS. THE CLIENT AGREES NOT TO REUSE THESE DRAWINGS - IN ELECTRONIC OR ANY OTHER FORMAT - IN WHOLE, OR IN PART, FOR ANY PURPOSE OTHER THAN FOR THE PROJECT. THE CLIENT AGREES NOT TO TRANSFER THESE ELECTRONIC FILES TO OTHERS WITHOUT THE PRIOR WRITTEN CONSENT OF THE ARCHITECT. THE CLIENT FURTHER AGREES TO WAIVE ALL CLAIMS AGAINST THE ARCHITECT RESULTING IN ANY WAY FROM ANY CHANGES MADE OR REUSES TO OR REUSE OF THE ELECTRONIC FILES FOR ANY OTHER PROJECT BY ANYONE OTHER THAN THE ARCHITECT.

FIRST FLOOR DIMENSION PLAN - AREA A

A-121

COPYRIGHT 2022 - JRA, INC.

C:\Users\lburnett\OneDrive - JRA Architects\Documents\202258 - UK Indoor Track_lburnettNAL5.rvt

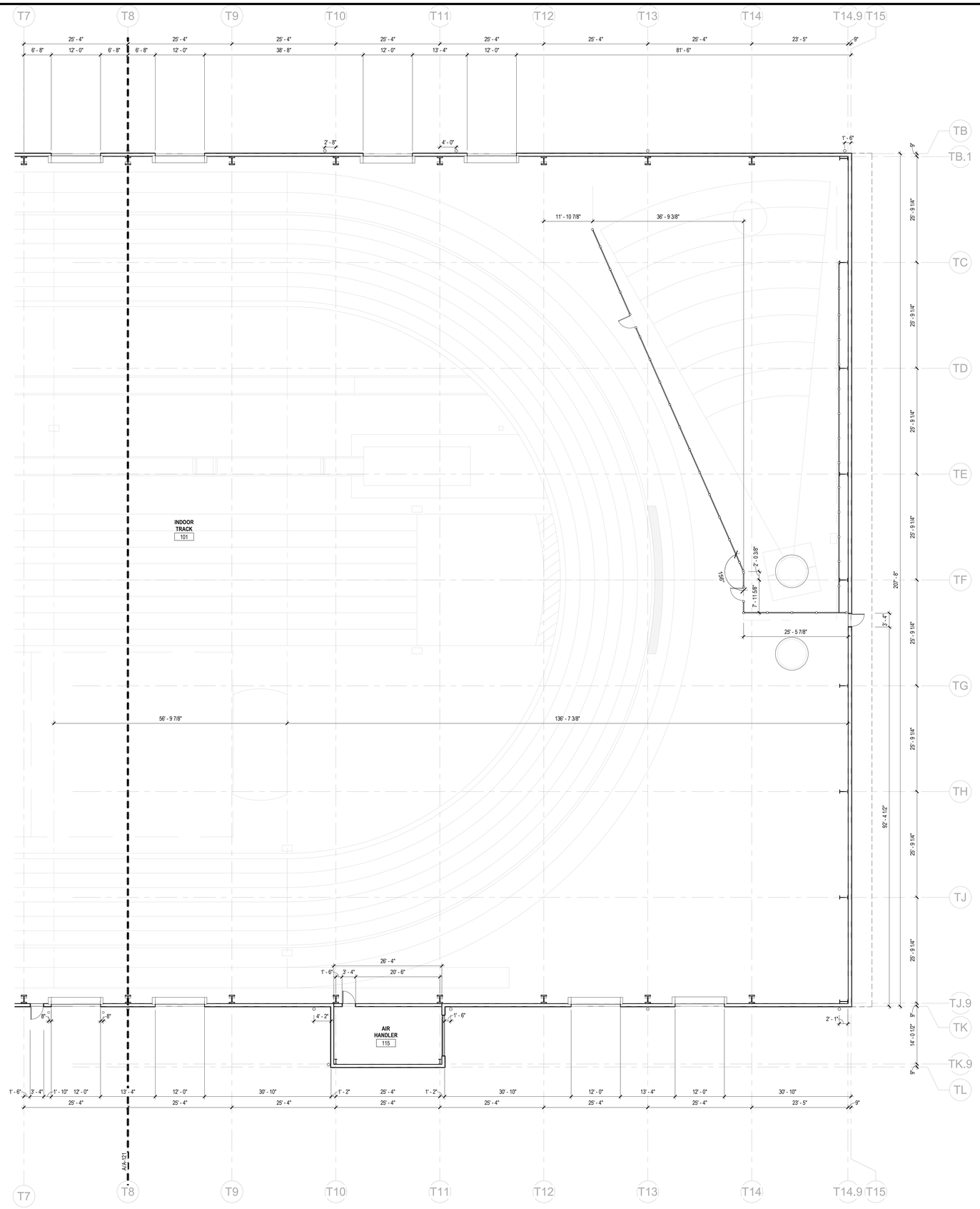

A DIMENSION FIRST FLOOR AREA B
3/32" = 1'-0"

9/2/2022 3:22:49 PM

JRA architects
3225 Summit Square Place, Suite 200
Lexington, Kentucky 40509
859.252.6781

NOT FOR CONSTRUCTION

RESERVED FOR AHJ STAMP

RFP 2 DRAWINGS

UK INDOOR TRACK FACILITY
UNIVERSITY OF KENTUCKY
700 SPORTS CENTER DRIVE LEXINGTON, KENTUCKY 40506

ARCHITECTURAL

PROJECT	202258
DATE	08/31/2022

REVISIONS

No.	Description	Date

JRA ARCHITECTS HAS RETAINED AN ELECTRONIC VERSION OF THEIR DRAWINGS. THE CLIENT AGREES NOT TO REUSE THESE DRAWINGS - IN ELECTRONIC OR ANY OTHER FORMAT - IN WHOLE, OR IN PART, FOR ANY PURPOSE OTHER THAN FOR THE PROJECT. THE CLIENT AGREES NOT TO TRANSFER THESE ELECTRONIC FILES TO OTHERS WITHOUT THE PRIOR WRITTEN CONSENT OF THE ARCHITECT. THE CLIENT FURTHER AGREES TO WAIVE ALL CLAIMS AGAINST THE ARCHITECT RESULTING IN ANY WAY FROM ANY CHANGES OR REUSES TO OR REUSE OF THE ELECTRONIC FILES FOR ANY OTHER PROJECT BY ANYONE OTHER THAN THE ARCHITECT.

FIRST FLOOR DIMENSION PLAN - AREA B

A-122

COPYRIGHT 2022 - JRA, INC.

C:\Users\lburnett\OneDrive - JRA Architects\Documents\202258 - UK Indoor Track_lburnettNAL5.rvt

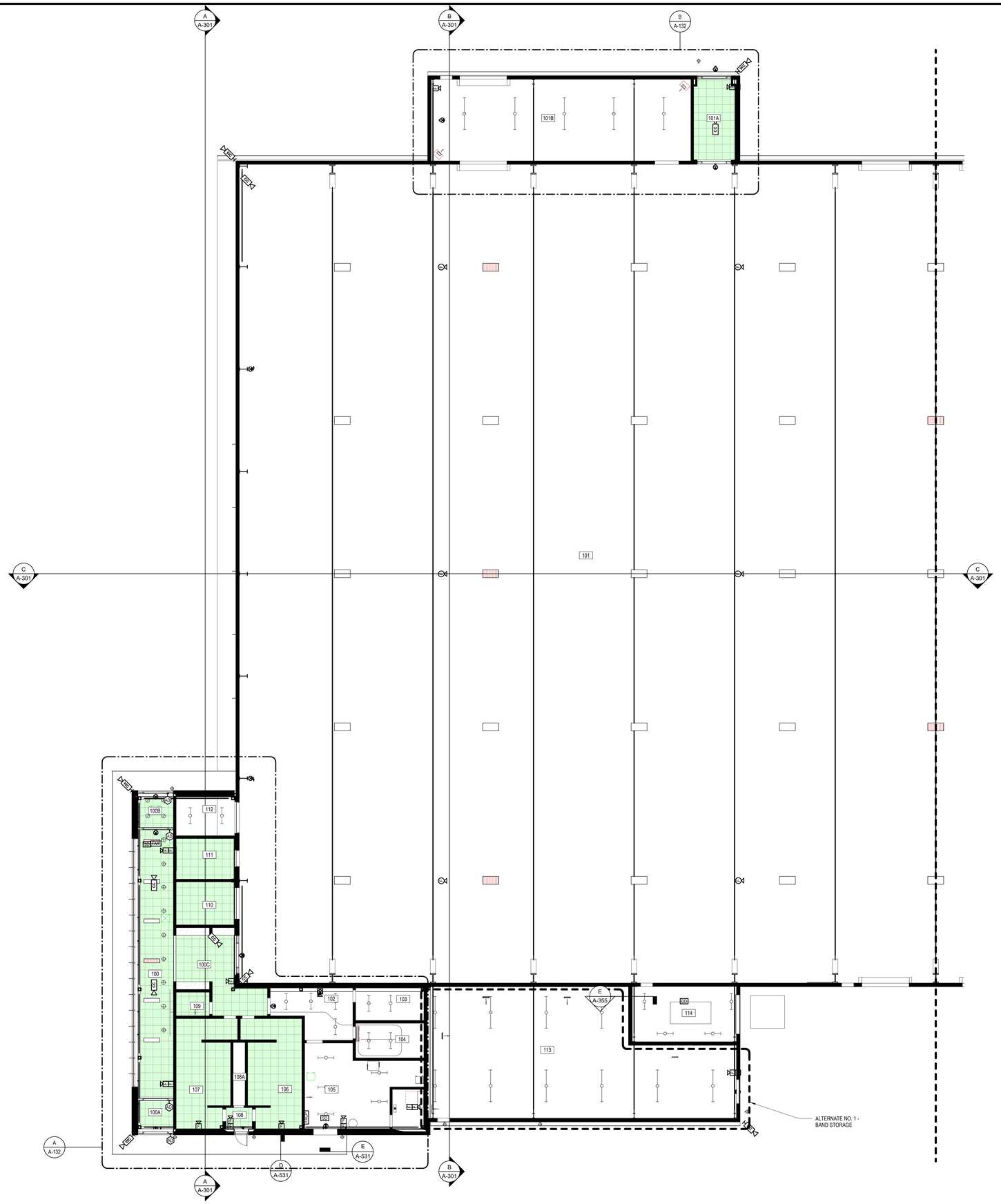

A FIRST FLOOR REFLECTED CEILING PLAN - AREA A
3/32" = 1'-0"

SPECIALTIES & EQUIPMENT SCHEDULE			
MARK	DESCRIPTION	PROVIDED BY	COMMENTS
10 1100 - VISUAL DISPLAY SURFACES			
MB1	MARKER BOARD	C.F.C.I.	
10 2600 - WALL & DOOR PROTECTION			
W1	CORNER GUARD	C.F.C.I.	
10 2800 - TOILET ACCESSORY			
T01	GRAB BAR SET: 36" BACK, 42" SIDE, 18" VERTICAL	C.F.C.I.	
T02	TOILET PAPER DISPENSER - DOUBLE ROLL	O.F.C.I.	
T03	SANITARY NAPKIN DISPOSAL - PARTITION MOUNTED	C.F.C.I.	
T04	SANITARY NAPKIN DISPOSAL - RECESSED	C.F.C.I.	
T05	FRAMELESS MIRROR	C.F.C.I.	
T06	SOAP DISPENSER - SURFACE MOUNTED, VERTICAL	O.F.C.I.	
T07	PAPER TOWEL DISPENSER	O.F.C.I.	
T08	BABY CHANGING STATION	C.F.C.I.	
T09	UTILITY SHELF WITH MOP AND BROOM HOLDER	C.F.C.I.	
10 4313 - LIFE SAFETY CABINETS			
D1	DEFIBRILLATOR CABINET		
10 4413 - FIRE EQUIPMENT			
F1	SEMI-RECESSED FIRE EXTINGUISHER CABINET	C.F.C.I.	
F5	KNOX BOX	C.F.C.I.	
EQUIPMENT			
O1	ICE MACHINE	O.F.O.I.	

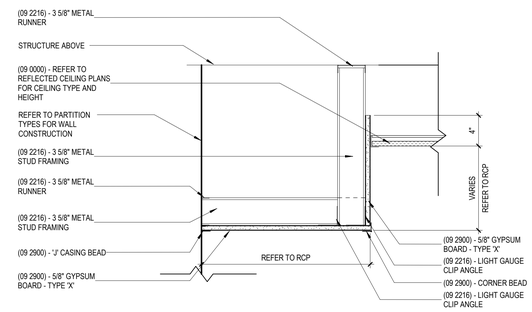

B TYPICAL SOFFIT DETAIL
1 1/2" = 1'-0"

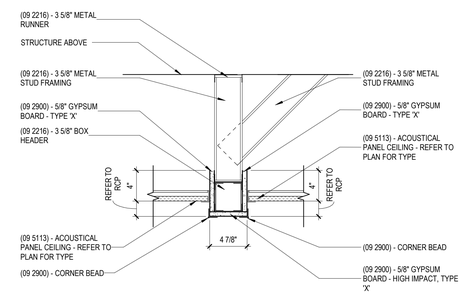

C TYPICAL BULKHEAD DETAIL
1 1/2" = 1'-0"

KEY PLAN

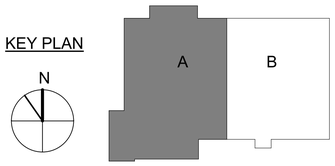

JRA architects
3225 Summit Square Place, Suite 200
Lexington, Kentucky 40509
859.252.6781

NOT FOR CONSTRUCTION

RESERVED FOR AHJ STAMP

RFP 2 DRAWINGS

UK INDOOR TRACK FACILITY
UNIVERSITY OF KENTUCKY
700 SPORTS CENTER DRIVE LEXINGTON, KENTUCKY 40506

ARCHITECTURAL

PROJECT	202258
DATE	08/31/2022

REVISIONS

No.	Description	Date

JRA ARCHITECTS HAS RETAINED AN ELECTRONIC VERSION OF THESE DRAWINGS. THE CLIENT AGREES NOT TO REPRODUCE THESE ELECTRONIC FILES, OR ANY OTHER FORMAT - IN WHOLE, OR IN PART, FOR ANY PURPOSE OTHER THAN FOR THE PROJECT. THE CLIENT AGREES NOT TO TRANSFER THESE ELECTRONIC FILES TO OTHERS WITHOUT THE PRIOR WRITTEN CONSENT OF THE ARCHITECT. THE CLIENT FURTHER AGREES TO WAIVE ALL CLAIMS AGAINST THE ARCHITECT RESULTING IN ANY WAY FROM ANY UNAUTHORIZED CHANGES TO OR REUSE OF THE ELECTRONIC FILES FOR ANY OTHER PROJECT BY ANYONE OTHER THAN THE ARCHITECT.

FIRST FLOOR REFLECTED CEILING PLAN - AREA A

A-131

COPYRIGHT 2022 - JRA, INC.

9/2/2022 3:22:51 PM

C:\Users\lburnett\OneDrive - JRA Architects\Documents\202258 - UK Indoor Track_lburnettNA4L5.rvt

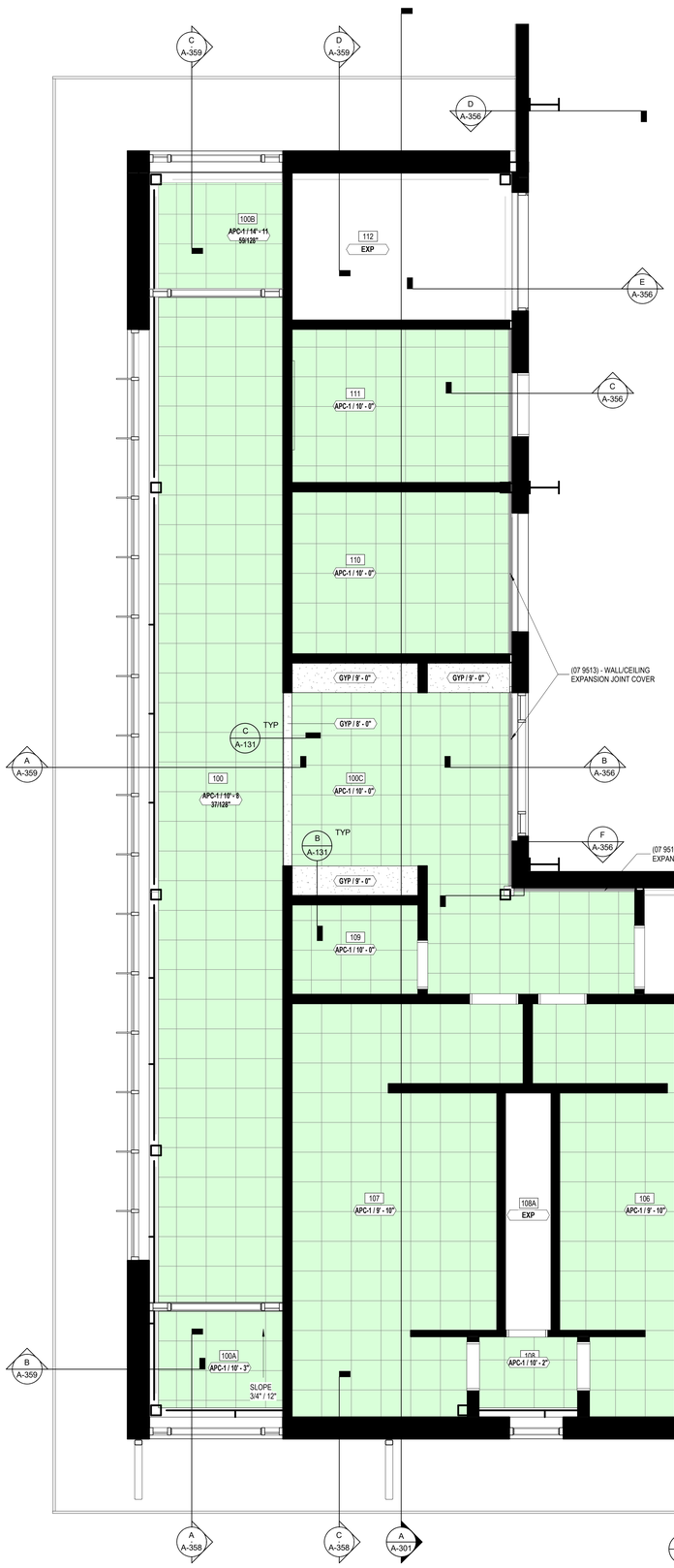

(A) ENLARGED FLOOR PLAN REFLECTED CEILING PLAN
1/4" = 1'-0"

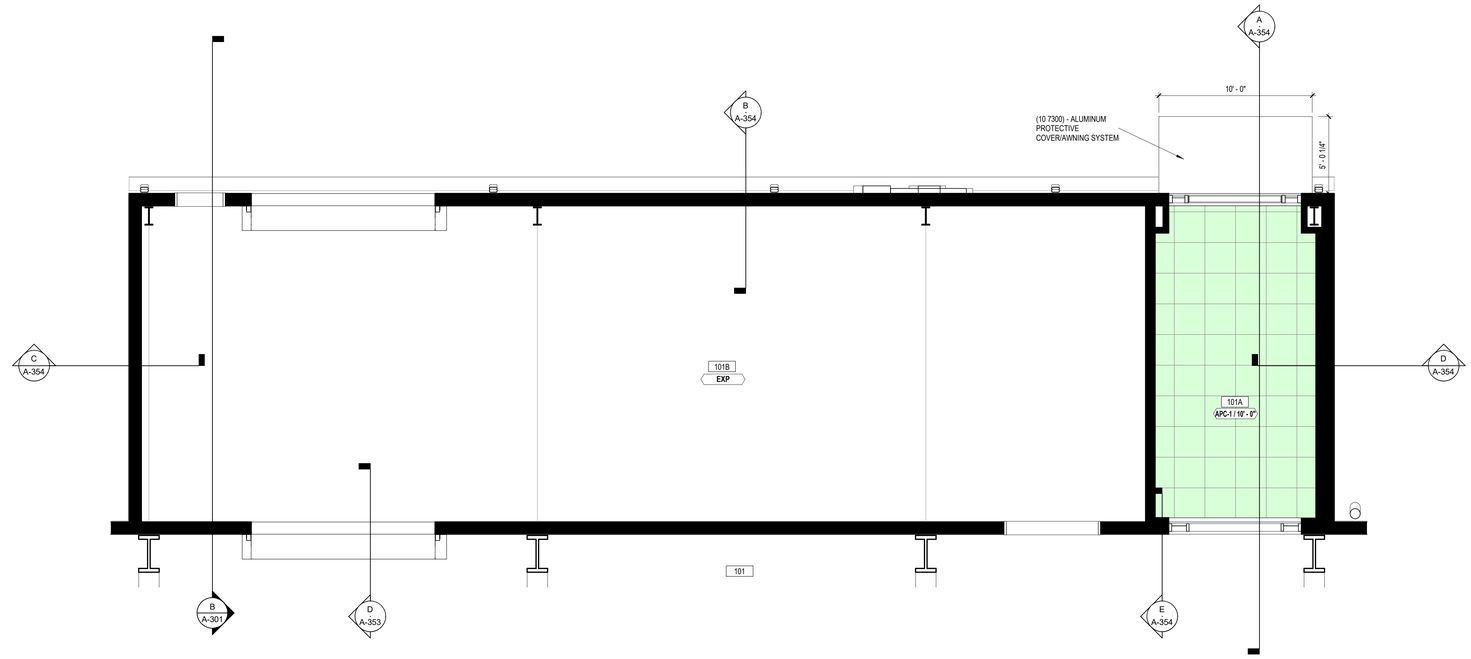

(B) ENLARGED TRACK STORAGE REFLECTED CEILING PLAN
1/4" = 1'-0"

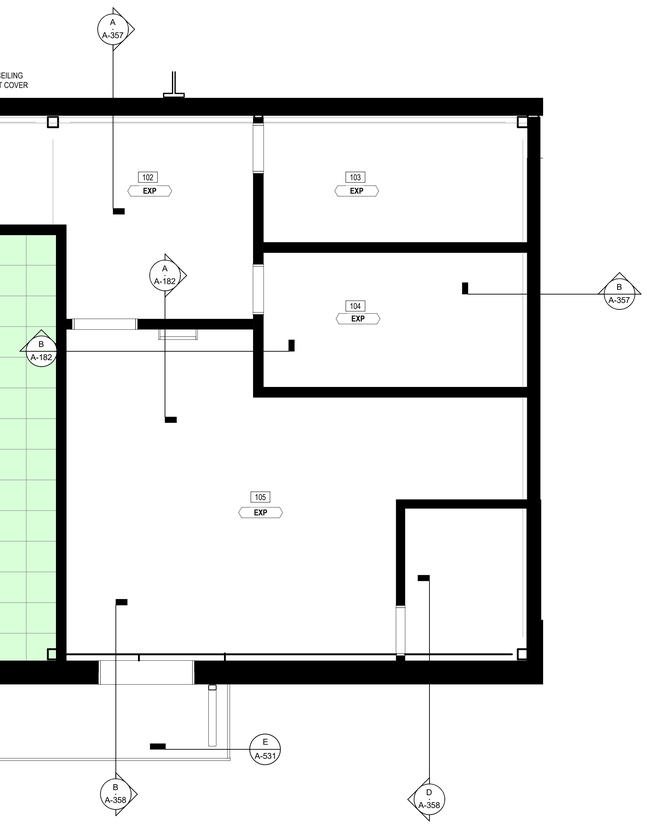

(C) SPECIALTIES & EQUIPMENT SCHEDULE

MARK	DESCRIPTION	PROVIDED BY	COMMENTS
10 1100 - VISUAL DISPLAY SURFACES			
MB1	MARKER BOARD	C.F.C.I.	
10 2600 - WALL & DOOR PROTECTION			
W1	CORNER GUARD	C.F.C.I.	
10 2800 - TOILET ACCESSORY			
T01	GRAB BAR SET. 36" BACK, 42" SIDE, 18" VERTICAL	C.F.C.I.	
T02	TOILET PAPER DISPENSER - DOUBLE ROLL	O.F.C.I.	
T03	SANITARY NAPKIN DISPOSAL - PARTITION MOUNTED	C.F.C.I.	
T04	SANITARY NAPKIN DISPOSAL - RECESSED	C.F.C.I.	
T05	FRAMELESS MIRROR	C.F.C.I.	
T06	SOAP DISPENSER - SURFACE MOUNTED, VERTICAL	O.F.C.I.	
T07	PAPER TOWEL DISPENSER	O.F.C.I.	
T08	BABY CHANGING STATION	C.F.C.I.	
T09	UTILITY SHELF WITH MOP AND BROOM HOLDER	C.F.C.I.	
10 4313 - LIFE SAFETY CABINETS			
D1	DEFIBRILLATOR CABINET		
10 4413 - FIRE EQUIPMENT			
F1	SEMI-RECESSED FIRE EXTINGUISHER CABINET	C.F.C.I.	
F5	KNOX BOX	C.F.C.I.	
EQUIPMENT			
O1	ICE MACHINE	O.F.O.I.	

JRA architects
3225 Summit Square Place, Suite 200
Lexington, Kentucky 40509
859.252.6781

NOT FOR CONSTRUCTION

RESERVED FOR AHJ STAMP

RFP 2 DRAWINGS

UK INDOOR TRACK FACILITY
UNIVERSITY OF KENTUCKY
700 SPORTS CENTER DRIVE LEXINGTON, KENTUCKY 40506

ARCHITECTURAL

PROJECT	202258
DATE	08/31/2022

REVISIONS

No.	Description	Date

JRA ARCHITECTS HAS RETAINED AN ELECTRONIC VERSION OF THESE DRAWINGS. THE CLIENT AGREES NOT TO REUSE THESE DRAWINGS - IN ELECTRONIC OR ANY OTHER FORMAT - IN WHOLE, OR IN PART, FOR ANY PURPOSE OTHER THAN FOR THIS PROJECT. THE CLIENT AGREES NOT TO TRANSFER THESE ELECTRONIC FILES TO OTHERS WITHOUT THE PRIOR WRITTEN CONSENT OF THE ARCHITECT. THE CLIENT FURTHER AGREES TO WAIVE ALL CLAIMS AGAINST THE ARCHITECT RESULTING IN ANY WAY FROM ANY UNAUTHORIZED CHANGES TO OR REUSE OF THE ELECTRONIC FILES FOR ANY OTHER PROJECT BY ANYONE OTHER THAN THE ARCHITECT.

ENLARGED REFLECTED CEILING PLAN

A-132

COPYRIGHT 2022 - JRA, INC.

9/2/2022 3:22:53 PM

C:\Users\lburnett\OneDrive - JRA Architects\Documents\202258 - UK Indoor Track_lburnettNAL5.rvt

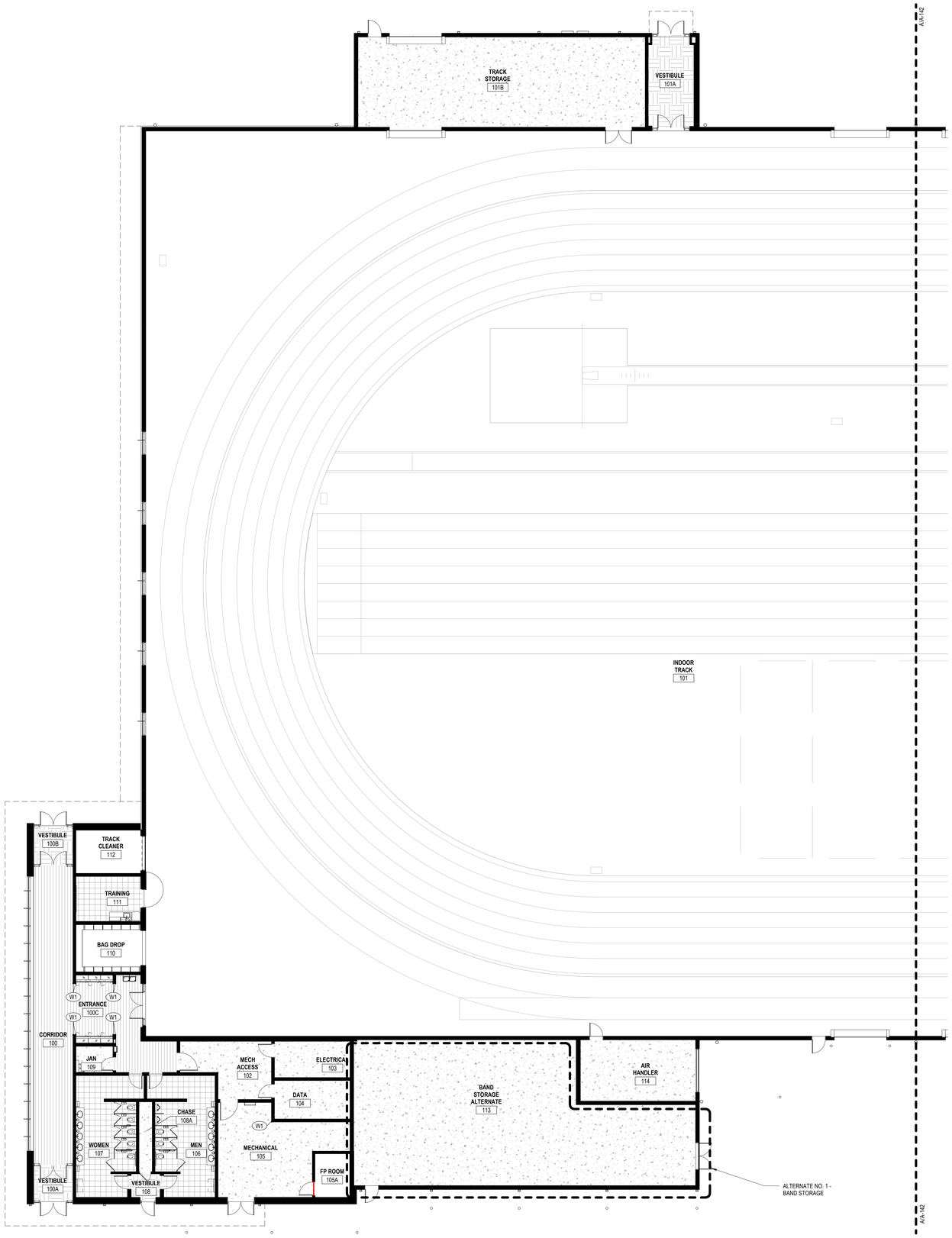

A FIRST FLOOR FINISH PLAN - AREA A
3/32" = 1'-0"

KEY PLAN

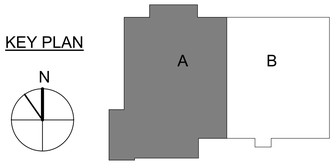

JRA architects
3225 Summit Square Place, Suite 200
Lexington, Kentucky 40509
859.252.6781

NOT FOR CONSTRUCTION

RESERVED FOR AHJ STAMP

RFP 2 DRAWINGS

UK INDOOR TRACK FACILITY
UNIVERSITY OF KENTUCKY
700 SPORTS CENTER DRIVE LEXINGTON, KENTUCKY 40506

ARCHITECTURAL

PROJECT	202258
DATE	08/31/2022

REVISIONS

No.	Description	Date

JRA ARCHITECTS HAS RETAINED AN ELECTRONIC VERSION OF THESE DRAWINGS. THE CLIENT AGREES NOT TO REUSE THESE DRAWINGS - IN ELECTRONIC OR ANY OTHER FORMAT - IN WHOLE, OR IN PART, FOR ANY PURPOSE OTHER THAN FOR THE PROJECT. THE CLIENT AGREES NOT TO TRANSFER THESE ELECTRONIC FILES TO OTHERS WITHOUT THE PRIOR WRITTEN CONSENT OF THE ARCHITECT. THE CLIENT FURTHER AGREES TO WAIVE ALL CLAIMS AGAINST THE ARCHITECT RESULTING IN ANY WAY FROM ANY CHANGES OR ADDITIONS TO OR REUSE OF THE ELECTRONIC FILES FOR ANY OTHER PROJECT BY ANYONE OTHER THAN THE ARCHITECT.

FIRST FLOOR FINISH PLAN - AREA A

A-141

COPYRIGHT 2022 - JRA, INC.

9/2/2022 3:32:55 PM

C:\Users\lburnett\OneDrive - JRA Architects\Documents\202258 - UK Indoor Track_lburnettNAL5.rvt

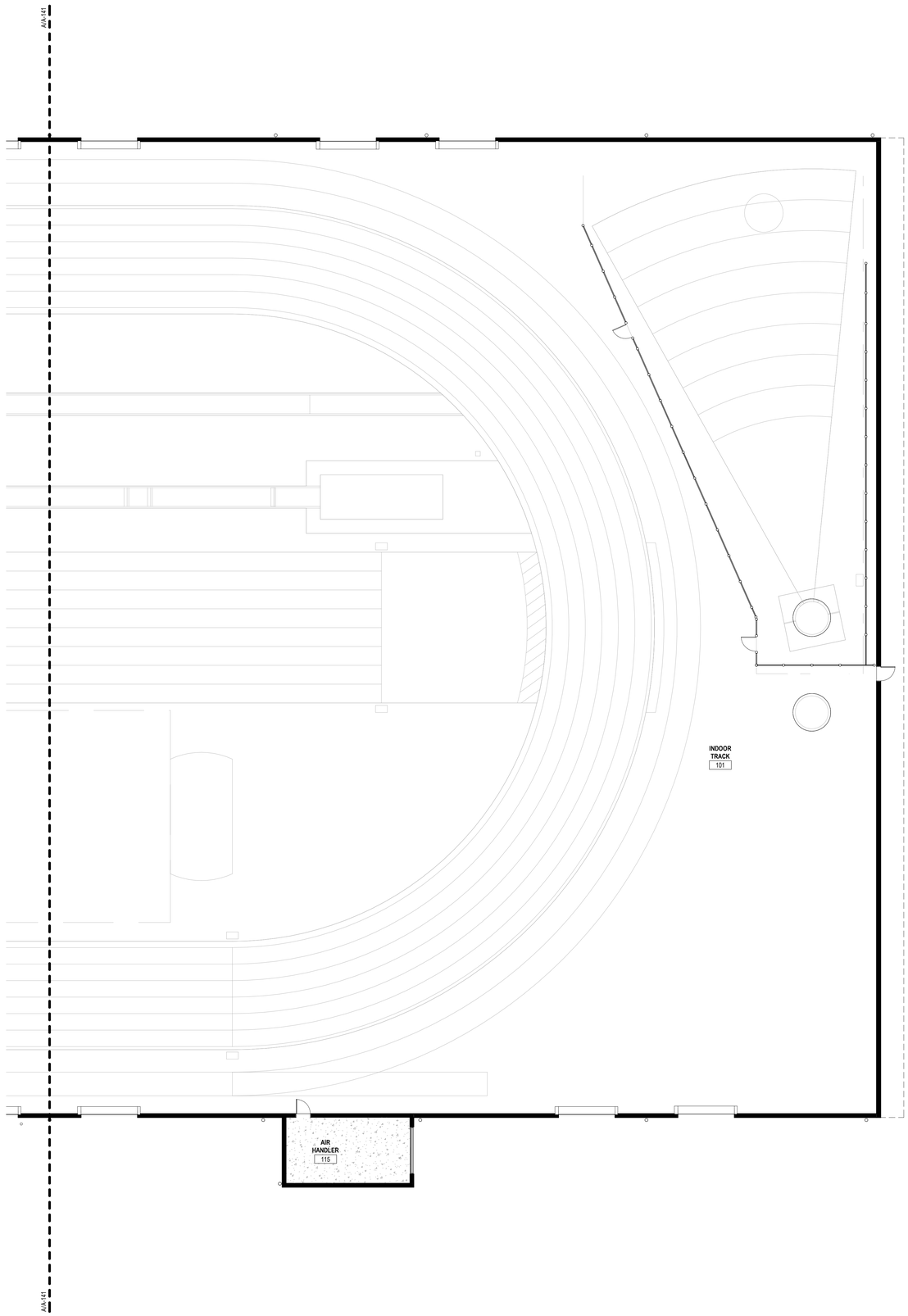

A FIRST FLOOR FINISH PLAN - AREA B
3/32" = 1'-0"

KEY PLAN

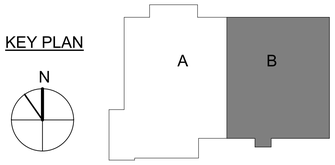

JRA architects
3225 Summit Square Place, Suite 200
Lexington, Kentucky 40509
859.252.6781

NOT FOR CONSTRUCTION

RESERVED FOR AHJ STAMP

RFP 2 DRAWINGS

UK INDOOR TRACK FACILITY
UNIVERSITY OF KENTUCKY
700 SPORTS CENTER DRIVE LEXINGTON, KENTUCKY 40506

ARCHITECTURAL

PROJECT	202258
DATE	08/31/2022

REVISIONS

No.	Description	Date

JRA ARCHITECTS HAS RETAINED AN ELECTRONIC VERSION OF THESE DRAWINGS. THE CLIENT AGREES NOT TO REUSE THESE DRAWINGS - IN ELECTRONIC OR ANY OTHER FORMAT - IN WHOLE, OR IN PART, FOR ANY PURPOSE OTHER THAN FOR THE PROJECT. THE CLIENT AGREES NOT TO TRANSFER THESE ELECTRONIC FILES TO OTHERS WITHOUT THE PRIOR WRITTEN CONSENT OF THE ARCHITECT. THE CLIENT FURTHER AGREES TO WAIVE ALL CLAIMS AGAINST THE ARCHITECT RESULTING IN ANY WAY FROM ANY CHANGES OR ADDITIONS TO OR REUSE OF THE ELECTRONIC FILES FOR ANY OTHER PROJECT BY ANYONE OTHER THAN THE ARCHITECT.

FIRST FLOOR FINISH PLAN - AREA B

A-142

COPYRIGHT 2022 - JRA, INC.

9/2/2022 3:22:56 PM

C:\Users\lburnett\OneDrive - JRA Architects\Documents\202258 - UK Indoor Track_lburnettNAL5.rvt

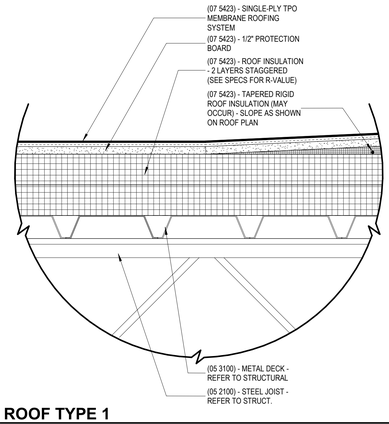

ROOF TYPE 1
3" = 1'-0"

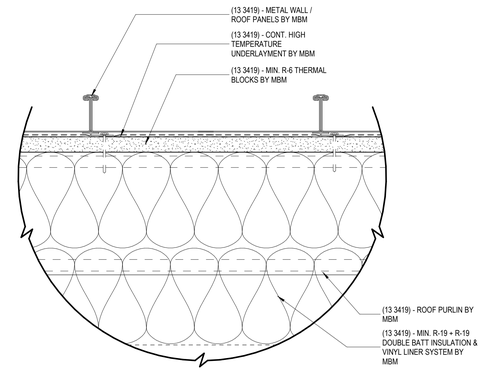

ROOF TYPE 2
3" = 1'-0"

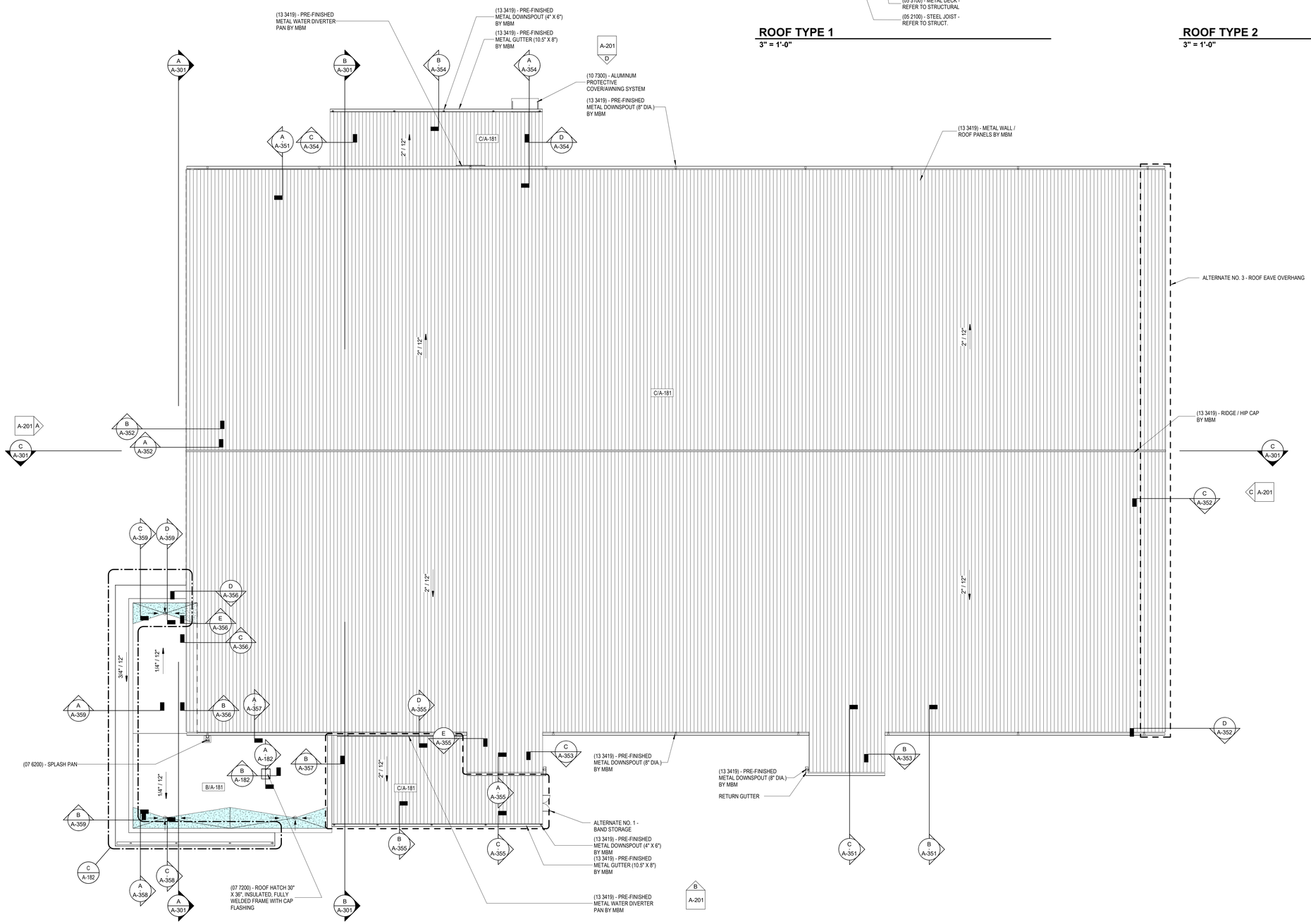

A ROOF PLAN
1/16" = 1'-0"

TAPERED INSULATION LEGEND	
	1/4" / 12"

KEY PLAN

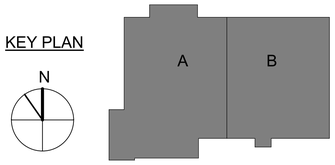

JRA architects
3225 Summit Square Place, Suite 200
Lexington, Kentucky 40509
859.252.6781

NOT FOR CONSTRUCTION

RESERVED FOR AHJ STAMP

RFP 2 DRAWINGS

UK INDOOR TRACK FACILITY
UNIVERSITY OF KENTUCKY
700 SPORTS CENTER DRIVE LEXINGTON, KENTUCKY 40506

ARCHITECTURAL

PROJECT	202258
DATE	08/31/2022

REVISIONS

No.	Description	Date

JRA ARCHITECTS HAS RETAINED AN ELECTRONIC VERSION OF THESE DRAWINGS. THE CLIENT AGREES NOT TO REUSE THESE DRAWINGS - IN ELECTRONIC OR PAPER FORMAT - IN WHOLE OR IN PART, FOR ANY PURPOSE OTHER THAN FOR THE PROJECT. THE CLIENT AGREES NOT TO TRANSFER THESE ELECTRONIC FILES TO OTHERS WITHOUT THE PRIOR WRITTEN CONSENT OF THE ARCHITECT. THE CLIENT FURTHER AGREES TO WAIVE ALL CLAIMS AGAINST THE ARCHITECT RESULTING IN ANY WAY FROM ANY UNAUTHORIZED CHANGES TO OR REUSE OF THE ELECTRONIC FILES FOR ANY OTHER PROJECT BY ANYONE OTHER THAN THE ARCHITECT.

ROOF PLAN

A-181

COPYRIGHT 2022 - JRA, INC.

9/2/2022 3:22:58 PM

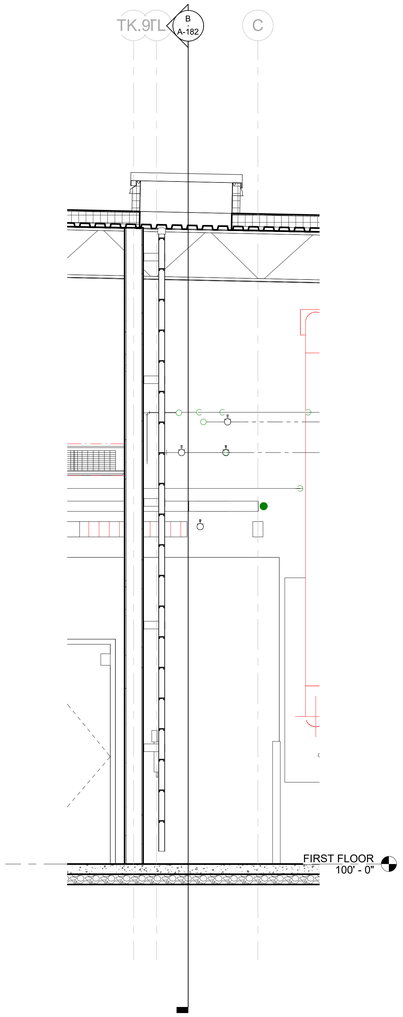

A ROOF HATCH SECTION 1
1/2" = 1'-0"

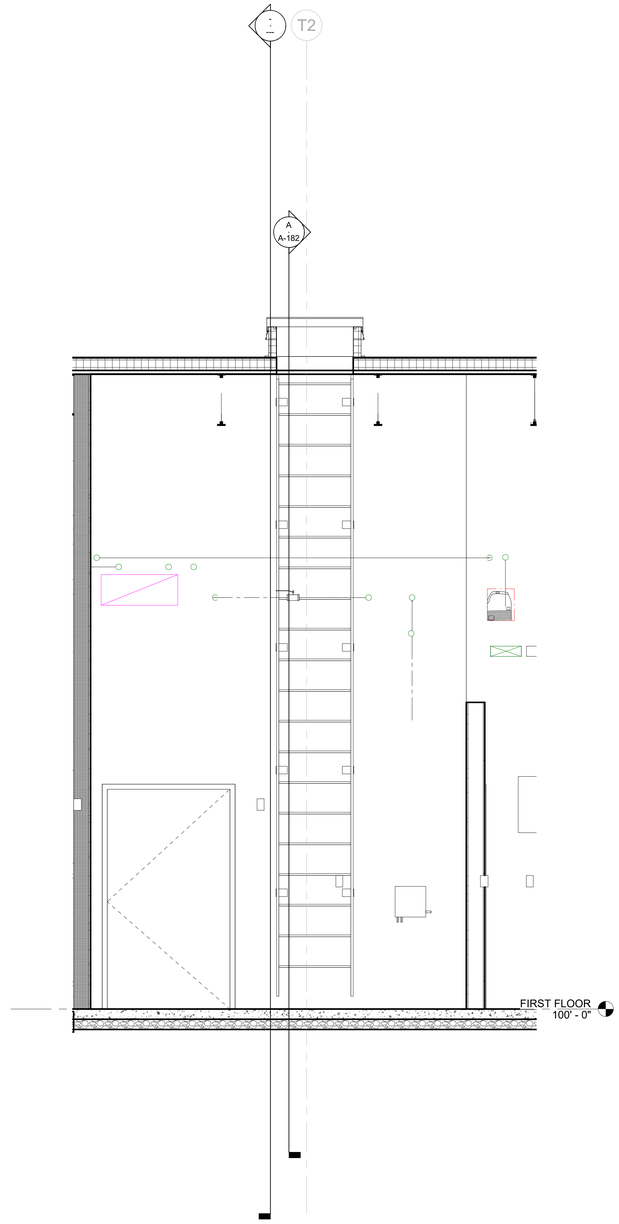

B ROOF HATCH SECTION 2
1/2" = 1'-0"

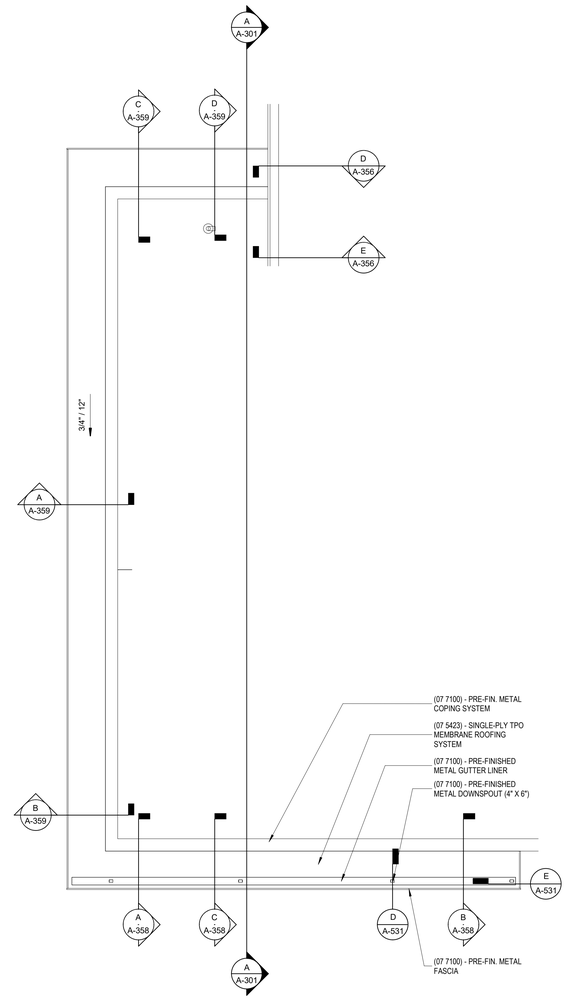

C ENLARGED CANOPY PLAN
1/8" = 1'-0"

JRA architects
3225 Summit Square Place, Suite 200
Lexington, Kentucky 40509
859.252.6781

NOT FOR CONSTRUCTION

RESERVED FOR AHJ STAMP

RFP 2 DRAWINGS

UK INDOOR TRACK FACILITY
UNIVERSITY OF KENTUCKY
700 SPORTS CENTER DRIVE LEXINGTON, KENTUCKY 40506

ARCHITECTURAL

PROJECT	202258
DATE	08/31/2022

REVISIONS

No.	Description	Date

JRA ARCHITECTS HAS RETAINED AN ELECTRONIC VERSION OF THESE DRAWINGS. THE CLIENT AGREES NOT TO REUSE THESE DRAWINGS - IN ELECTRONIC OR ANY OTHER FORMAT - IN WHOLE, OR IN PART, FOR ANY PURPOSE OTHER THAN FOR THE PROJECT. THE CLIENT AGREES NOT TO TRANSFER THESE ELECTRONIC FILES TO OTHERS WITHOUT THE PRIOR WRITTEN CONSENT OF THE ARCHITECT. THE CLIENT AGREES TO HOLD HARMLESS THE ARCHITECT AGAINST THE ARCHITECT RESULTING IN ANY WAY FROM ANY UNAUTHORIZED CHANGES TO OR REUSE OF THE ELECTRONIC FILES FOR ANY OTHER PROJECT BY ANYONE OTHER THAN THE ARCHITECT.

ROOF MISC PLANS & DETAILS

A-182

COPYRIGHT 2022 - JRA, INC.

C:\Users\lburnett\OneDrive - JRA Architects\Documents\202258 - UK Indoor Track_lburnettNAL5.rvt
9/2/2022 3:22:59 PM

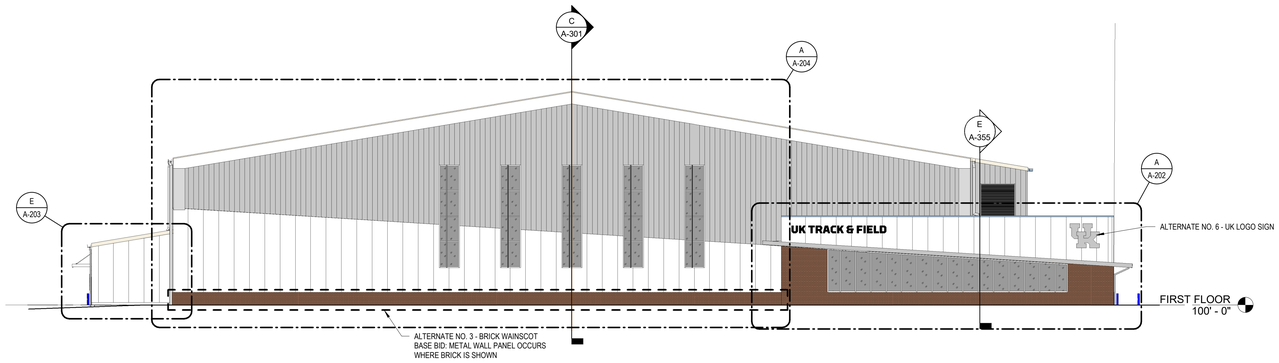

A BUILDING ELEVATION
1/16" = 1'-0"

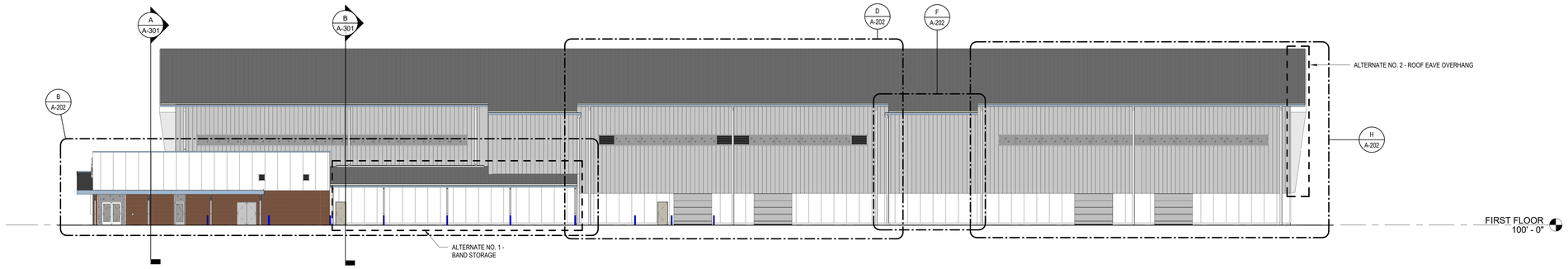

B BUILDING ELEVATION
1/16" = 1'-0"

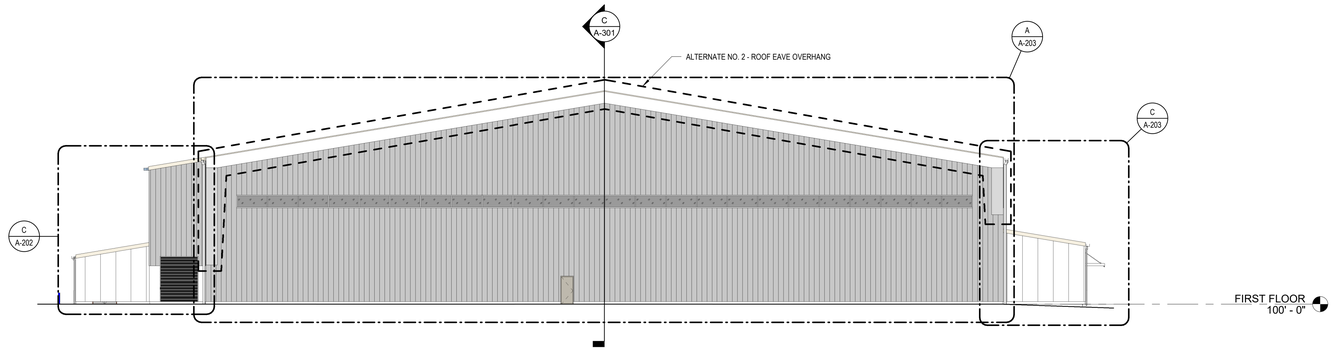

C BUILDING ELEVATION
1/16" = 1'-0"

D BUILDING ELEVATION
1/16" = 1'-0"

KEY PLAN

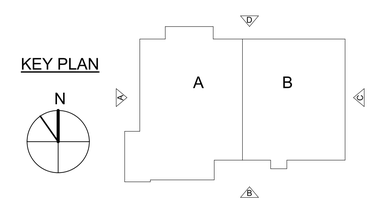

JRA architects
3225 Summit Square Place, Suite 200
Lexington, Kentucky 40509
859.252.6781

NOT FOR CONSTRUCTION

RESERVED FOR AHJ STAMP

RFP 2 DRAWINGS

UK INDOOR TRACK FACILITY
UNIVERSITY OF KENTUCKY
700 SPORTS CENTER DRIVE LEXINGTON, KENTUCKY 40506

ARCHITECTURAL

PROJECT	202258
DATE	8/31/2022

REVISIONS

No.	Description	Date

JRA ARCHITECTS HAS RETAINED AN ELECTRONIC VERSION OF THESE DRAWINGS. THE CLIENT AGREES NOT TO REUSE THESE DRAWINGS - IN ELECTRONIC OR ANY OTHER FORMAT - IN WHOLE, OR IN PART, FOR ANY PURPOSE OTHER THAN FOR THE PROJECT. THE CLIENT AGREES NOT TO TRANSFER THESE ELECTRONIC FILES TO OTHERS WITHOUT THE PRIOR WRITTEN CONSENT OF JRA ARCHITECTS. THE CLIENT FURTHER AGREES TO WAIVE ALL CLAIMS AGAINST THE ARCHITECT RESULTING IN ANY WAY FROM ANY UNAUTHORIZED CHANGES TO OR REUSE OF THE ELECTRONIC FILES FOR ANY OTHER PROJECT BY ANYONE OTHER THAN THE ARCHITECT.

BUILDING ELEVATIONS

A-201

COPYRIGHT 2022 - JRA, INC.

C:\Users\lburnett\OneDrive - JRA Architects\Documents\202258 - UK Indoor Track_lburnettNA4L5.rvt
9/7/2022 3:04:00 PM

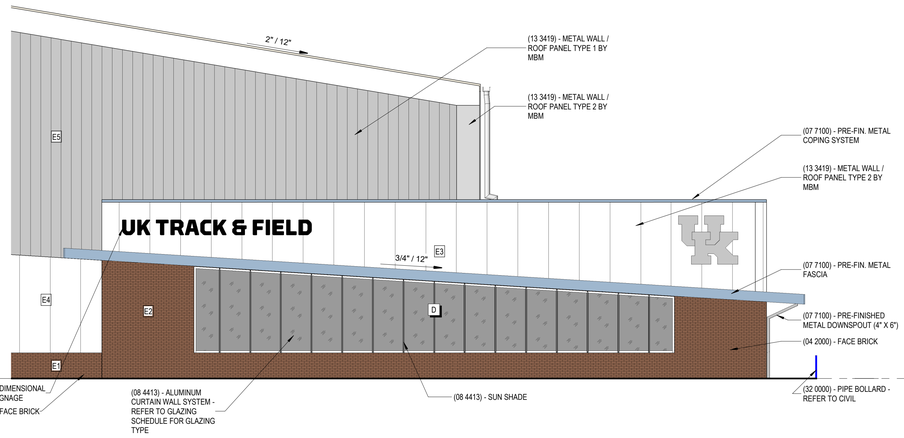

A ENLARGED BUILDING ELEVATION
1/8" = 1'-0"

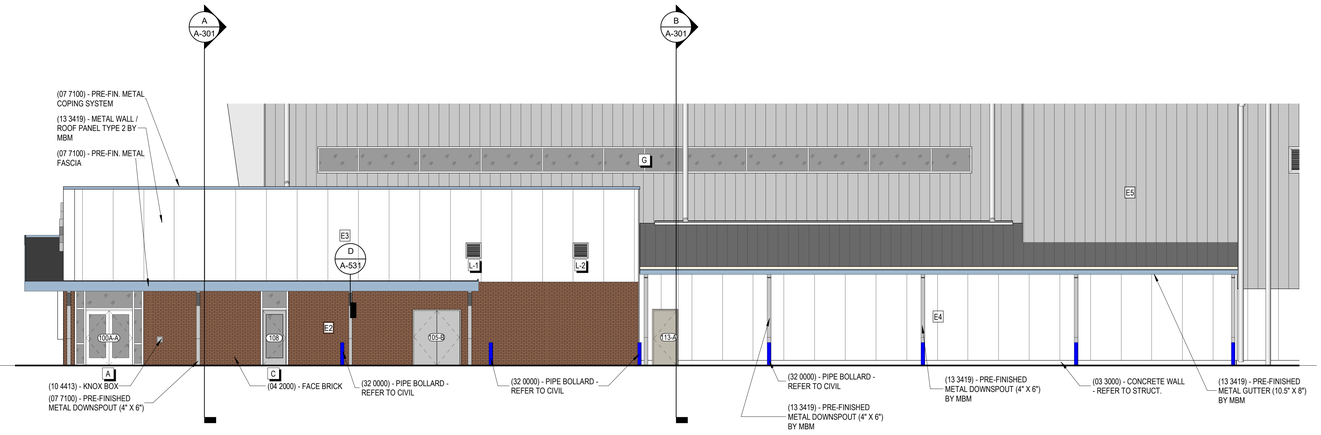

B ENLARGED BUILDING ELEVATION
1/8" = 1'-0"

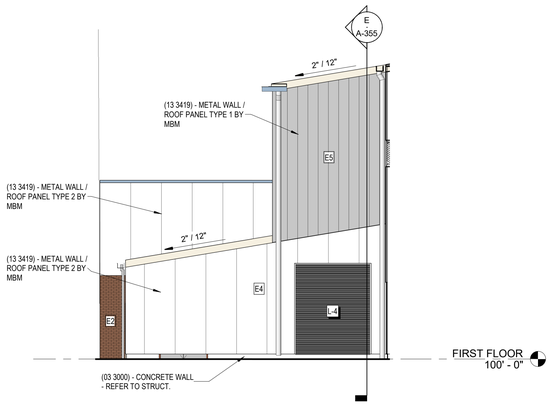

C ENLARGED BUILDING ELEVATION
1/8" = 1'-0"

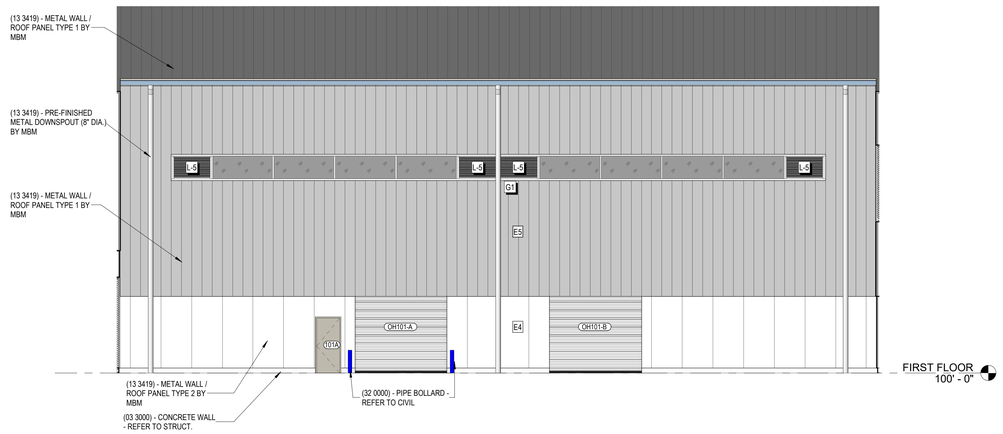

D ENLARGED BUILDING ELEVATION
1/8" = 1'-0"

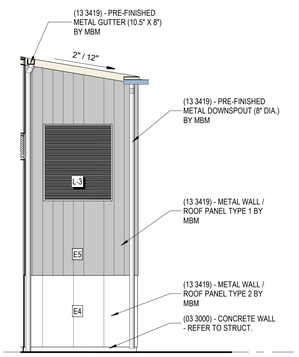

E ENLARGED BUILDING ELEVATION
1/8" = 1'-0"

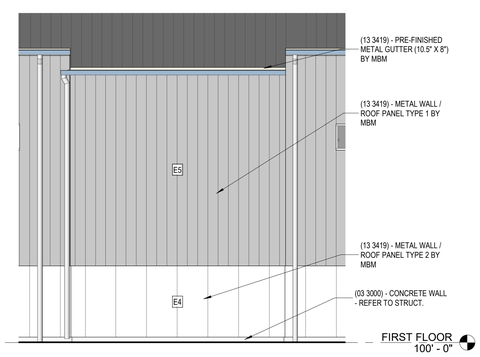

F ENLARGED BUILDING ELEVATION
1/8" = 1'-0"

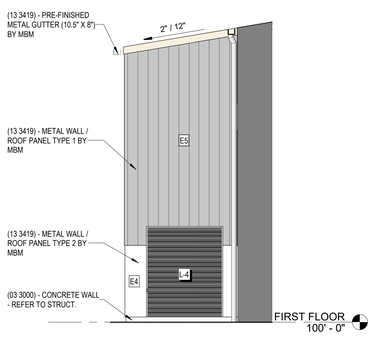

G ENLARGED BUILDING ELEVATION
1/8" = 1'-0"

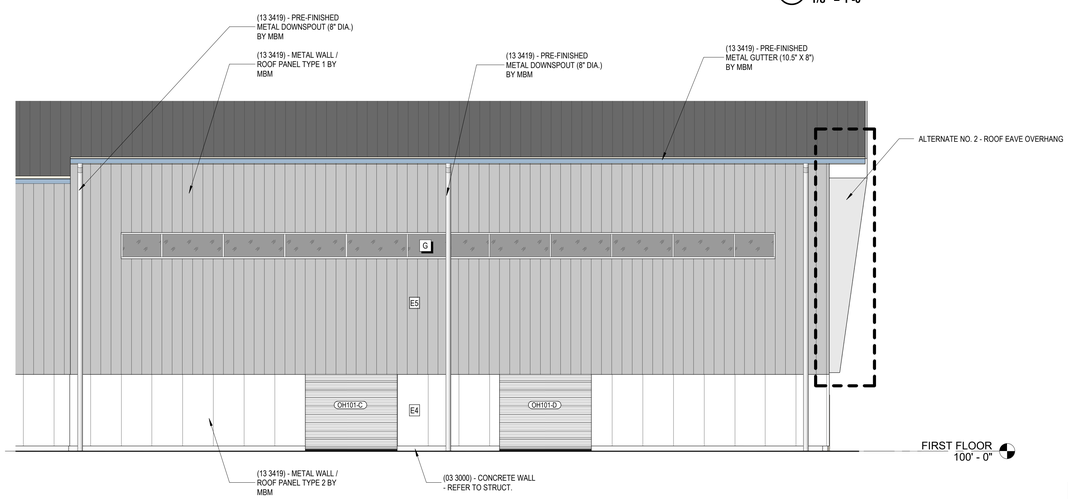

H ENLARGED BUILDING ELEVATION
1/8" = 1'-0"

KEY PLAN

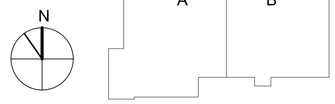

JRA architects
3225 Summit Square Place, Suite 200
Lexington, Kentucky 40509
859.252.6781

NOT FOR CONSTRUCTION

RESERVED FOR AHJ STAMP

RFP 2 DRAWINGS

UK INDOOR TRACK FACILITY
UNIVERSITY OF KENTUCKY
700 SPORTS CENTER DRIVE LEXINGTON, KENTUCKY 40506

ARCHITECTURAL

PROJECT	202258
DATE	8/31/2022

REVISIONS

No.	Description	Date

JRA ARCHITECTS HAS RETAINED AN ELECTRONIC VERSION OF THESE DRAWINGS. THE CLIENT AGREES NOT TO REUSE THESE DRAWINGS - IN ELECTRONIC OR PAPER FORMAT - IN WHOLE OR IN PART, FOR ANY PURPOSE OTHER THAN FOR THE PROJECT. THE CLIENT AGREES NOT TO TRANSFER THESE ELECTRONIC FILES TO OTHERS WITHOUT THE PRIOR WRITTEN CONSENT OF THE ARCHITECT. THE CLIENT FURTHER AGREES TO WAIVE ALL CLAIMS AGAINST THE ARCHITECT RESULTING IN ANY WAY FROM ANY UNAUTHORIZED CHANGES TO OR REUSE OF THE ELECTRONIC FILES FOR ANY OTHER PROJECT BY ANYONE OTHER THAN THE ARCHITECT.

ENLARGED BUILDING ELEVATIONS

A-202

COPYRIGHT 2022 - JRA, INC.

C:\Users\lburnett\OneDrive - JRA Architects\Documents\202258 - UK Indoor Track_lburnettNAL5.rvt

9/7/2022 3:04:42 PM

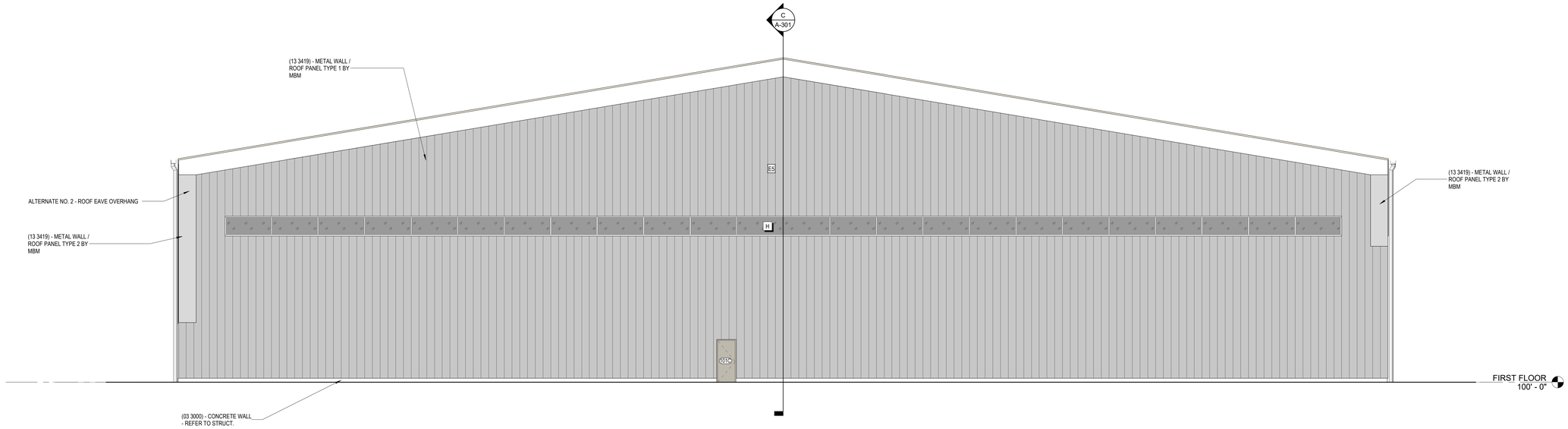

A ENLARGED BUILDING ELEVATION
1/8" = 1'-0"

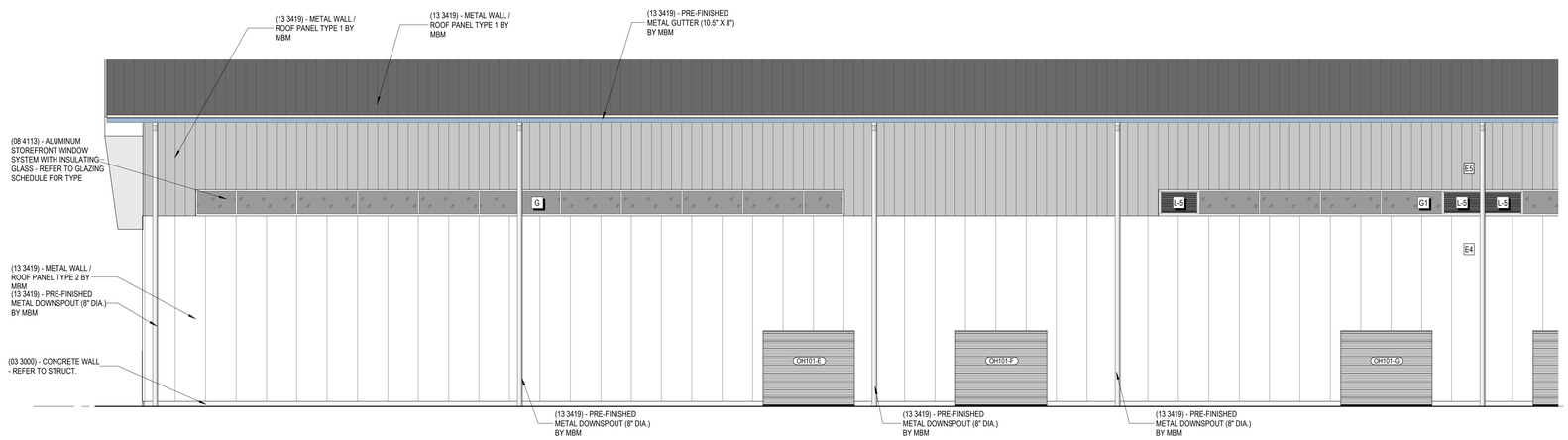

B ENLARGED BUILDING ELEVATION
1/8" = 1'-0"

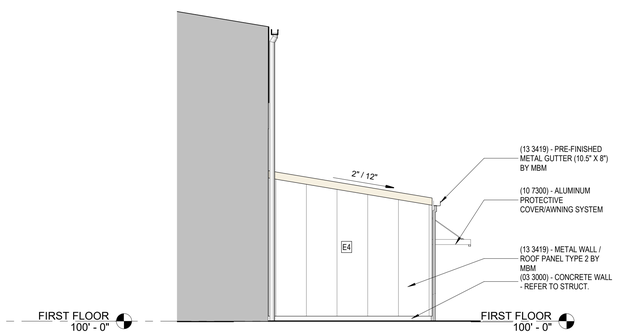

C ENLARGED BUILDING ELEVATION
1/8" = 1'-0"

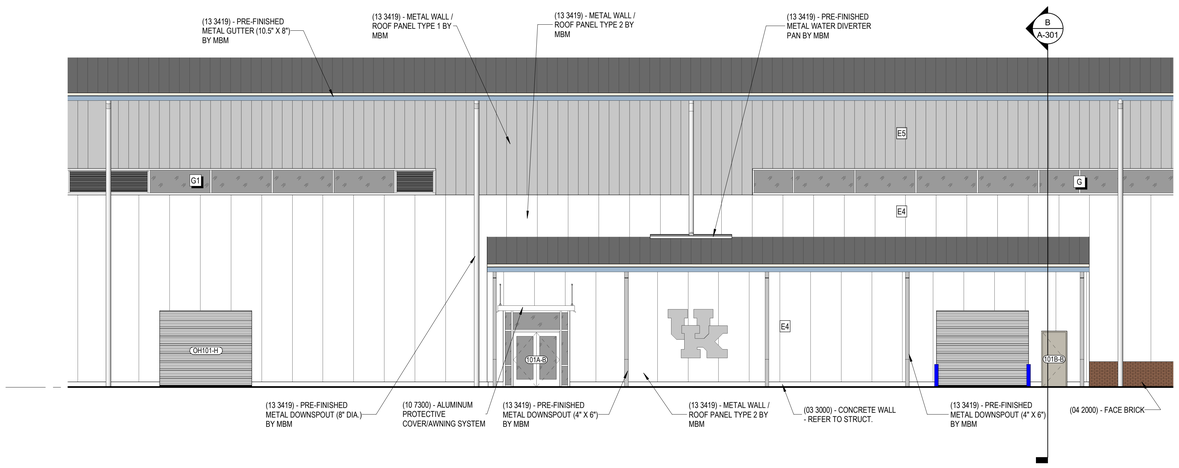

D ENLARGED BUILDING ELEVATION
1/8" = 1'-0"

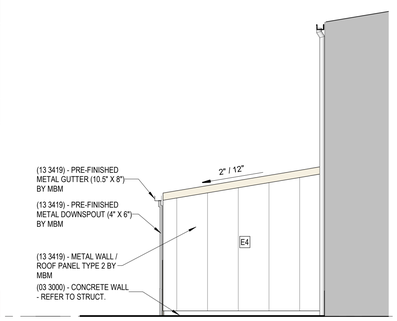

E ENLARGED BUILDING ELEVATION
1/8" = 1'-0"

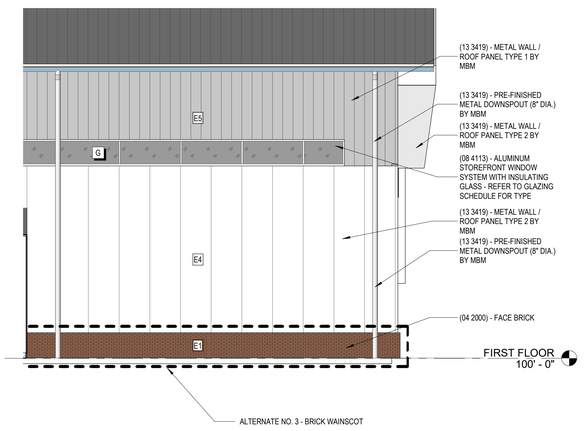

F ENLARGED BUILDING ELEVATION
1/8" = 1'-0"

JRA architects
3225 Summit Square Place, Suite 200
Lexington, Kentucky 40509
859.252.6781

NOT FOR CONSTRUCTION

RESERVED FOR AHJ STAMP

RFP 2 DRAWINGS

UK INDOOR TRACK FACILITY
UNIVERSITY OF KENTUCKY
700 SPORTS CENTER DRIVE LEXINGTON, KENTUCKY 40506

ARCHITECTURAL

PROJECT	202258
DATE	8/31/2022

REVISIONS

No.	Description	Date

JRA ARCHITECTS HAS RETAINED AN ELECTRONIC VERSION OF THESE DRAWINGS. THE CLIENT AGREES NOT TO REUSE THESE DRAWINGS - IN ELECTRONIC OR ANY OTHER FORMAT - IN WHOLE, OR IN PART, FOR ANY PURPOSE OTHER THAN FOR THE PROJECT. THE CLIENT AGREES NOT TO TRANSFER THESE ELECTRONIC FILES TO OTHERS WITHOUT THE PRIOR WRITTEN CONSENT OF THE ARCHITECT. THE CLIENT FURTHER AGREES TO WAIVE ALL CLAIMS AGAINST THE ARCHITECT RESULTING IN ANY WAY FROM ANY UNAUTHORIZED CHANGES TO OR REUSE OF THE ELECTRONIC FILES FOR ANY OTHER PROJECT BY ANYONE OTHER THAN THE ARCHITECT.

ENLARGED BUILDING ELEVATIONS

A-203

COPYRIGHT 2022 - JRA, INC.

C:\Users\lburnett\OneDrive - JRA Architects\Documents\202258 - UK Indoor Track_lburnettNAL5.rvt

9/7/2022 3:04:56 PM

C:\Users\Burnett\OneDrive - JRA Architects\Documents\202258 - UK Indoor Track_Burnett\NAL5.rvt

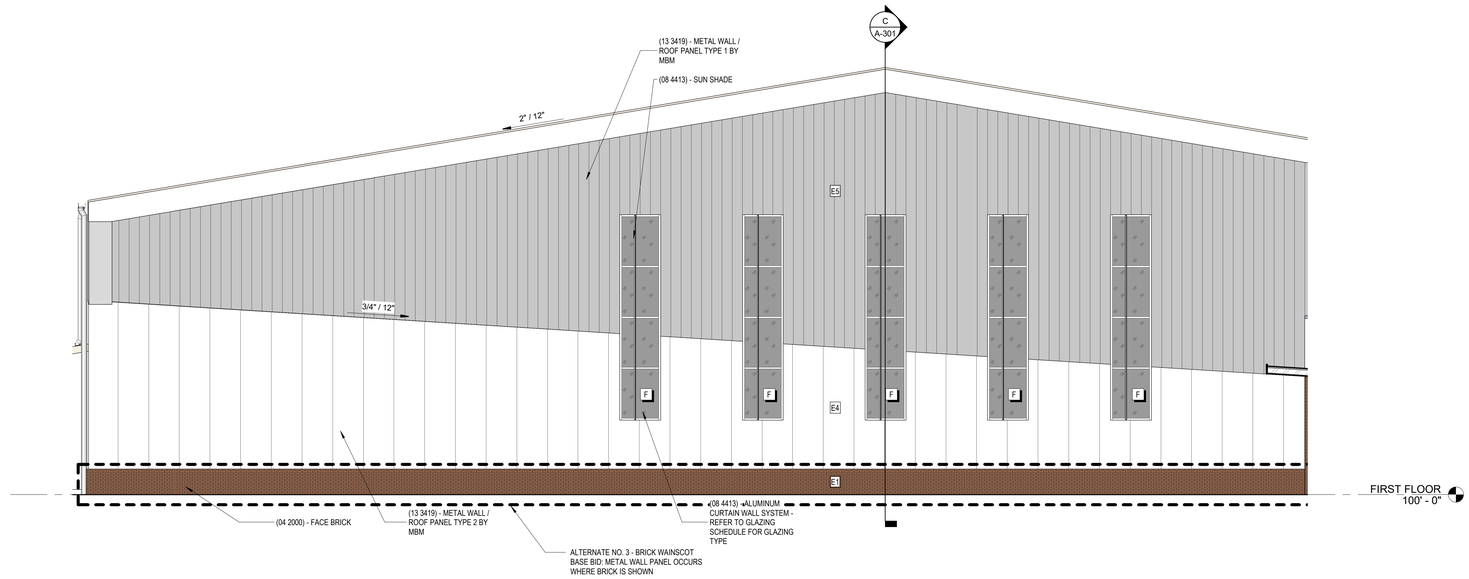

(A) ENLARGED BUILDING ELEVATION
1/8" = 1'-0"

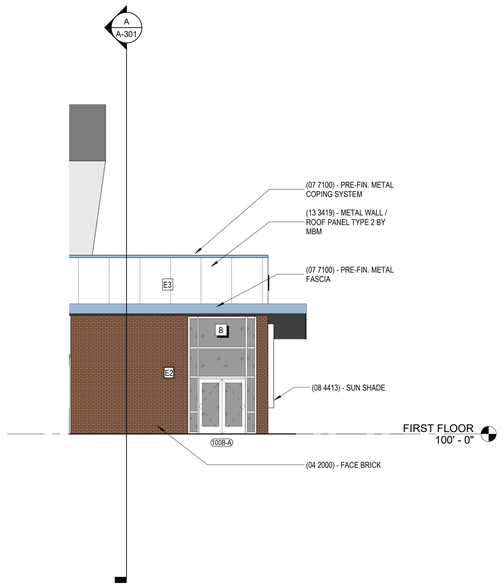

(B) ENLARGED BUILDING ELEVATION
1/8" = 1'-0"

KEY PLAN

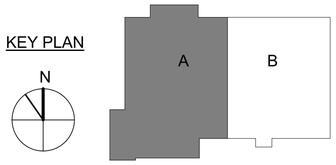

JRA architects
3225 Summit Square Place, Suite 200
Lexington, Kentucky 40509
859.252.6781

NOT FOR CONSTRUCTION

RESERVED FOR AHJ STAMP

RFP 2 DRAWINGS

UK INDOOR TRACK FACILITY
UNIVERSITY OF KENTUCKY
700 SPORTS CENTER DRIVE LEXINGTON, KENTUCKY 40506

ARCHITECTURAL

PROJECT	202258
DATE	8/31/2022

REVISIONS

No.	Description	Date

JRA ARCHITECTS HAS RETAINED AN ELECTRONIC VERSION OF THESE DRAWINGS. THE CLIENT AGREES NOT TO REUSE THESE DRAWINGS - IN ELECTRONIC OR ANY OTHER FORMAT - IN WHOLE, OR IN PART, FOR ANY PURPOSE OTHER THAN FOR THE PROJECT. THE CLIENT AGREES NOT TO TRANSFER THESE ELECTRONIC FILES TO OTHERS WITHOUT THE PRIOR WRITTEN CONSENT OF THE ARCHITECT. THE CLIENT FURTHER AGREES TO WAIVE ALL CLAIMS AGAINST THE ARCHITECT RESULTING IN ANY WAY FROM CHANGES AND/OR REUSES TO OR REUSE OF THE ELECTRONIC FILES FOR ANY OTHER PROJECT BY ANYONE OTHER THAN THE ARCHITECT.

ENLARGED BUILDING ELEVATIONS

A-204

COPYRIGHT 2022 - JRA, INC.

9/7/2022 3:06:13 PM

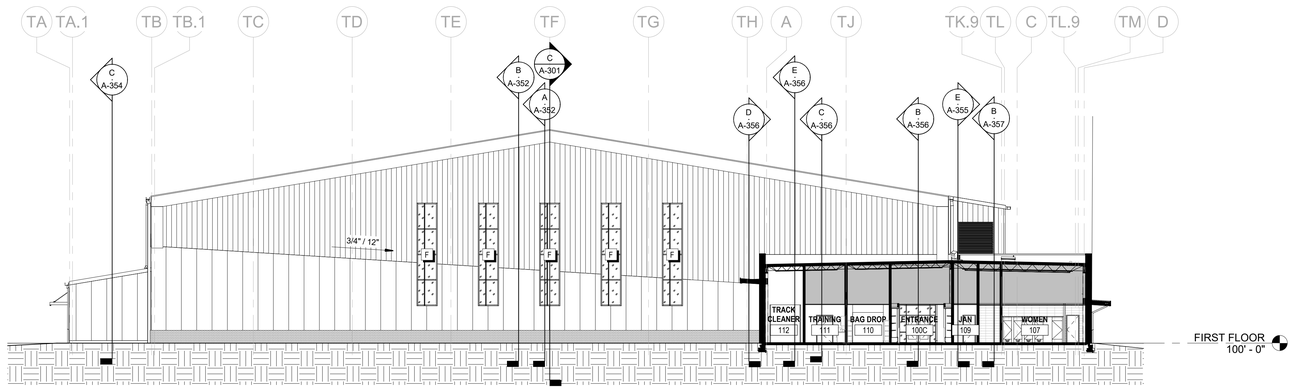

A BUILDING SECTION - ENTRANCE
1/16" = 1'-0"

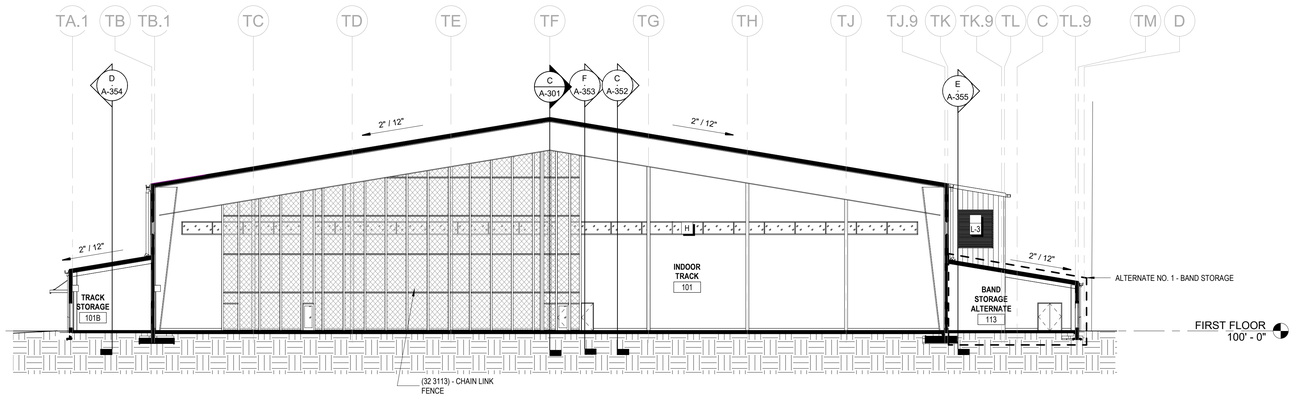

B BUILDING SECTION - INDOOR TRACK
1/16" = 1'-0"

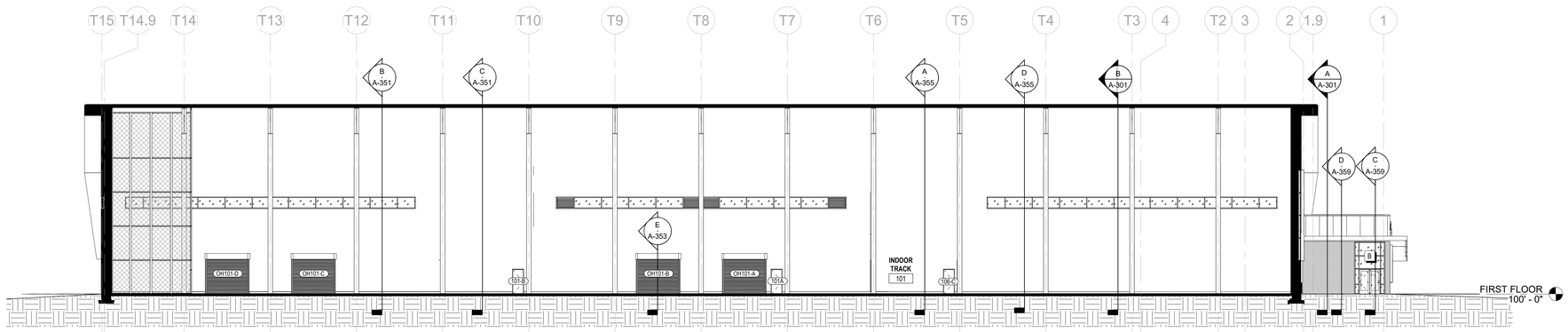

C BUILDING SECTION - INDOOR TRACK
1/16" = 1'-0"

JRA architects
3225 Summit Square Place, Suite 200
Lexington, Kentucky 40509
859.252.6781

NOT FOR CONSTRUCTION

RESERVED FOR AHJ STAMP

RFP 2 DRAWINGS

UK INDOOR TRACK FACILITY
UNIVERSITY OF KENTUCKY
700 SPORTS CENTER DRIVE LEXINGTON, KENTUCKY 40506

ARCHITECTURAL

PROJECT	202258
DATE	08/31/2022

REVISIONS

No.	Description	Date

JRA ARCHITECTS HAS RETAINED AN ELECTRONIC VERSION OF THESE DRAWINGS. THE CLIENT AGREES NOT TO REUSE THESE DRAWINGS - IN ELECTRONIC OR ANY OTHER FORMAT - IN WHOLE, OR IN PART, FOR ANY PURPOSE OTHER THAN FOR THE PROJECT. THE CLIENT AGREES NOT TO TRANSFER THESE ELECTRONIC FILES TO OTHERS WITHOUT THE PRIOR WRITTEN CONSENT OF THE ARCHITECT. THE CLIENT FURTHER AGREES TO WAIVE ALL CLAIMS AGAINST THE ARCHITECT RESULTING IN ANY WAY FROM ANY UNAUTHORIZED CHANGES TO OR REUSE OF THE ELECTRONIC FILES FOR ANY OTHER PROJECT BY ANYONE OTHER THAN THE ARCHITECT.

BUILDING SECTIONS

A-301

COPYRIGHT 2022 - JRA, INC.

C:\Users\lburnett\OneDrive - JRA Architects\Documents\202258 - UK Indoor Track_lburnettNAL5.rvt
9/2/2022 3:23:38 PM

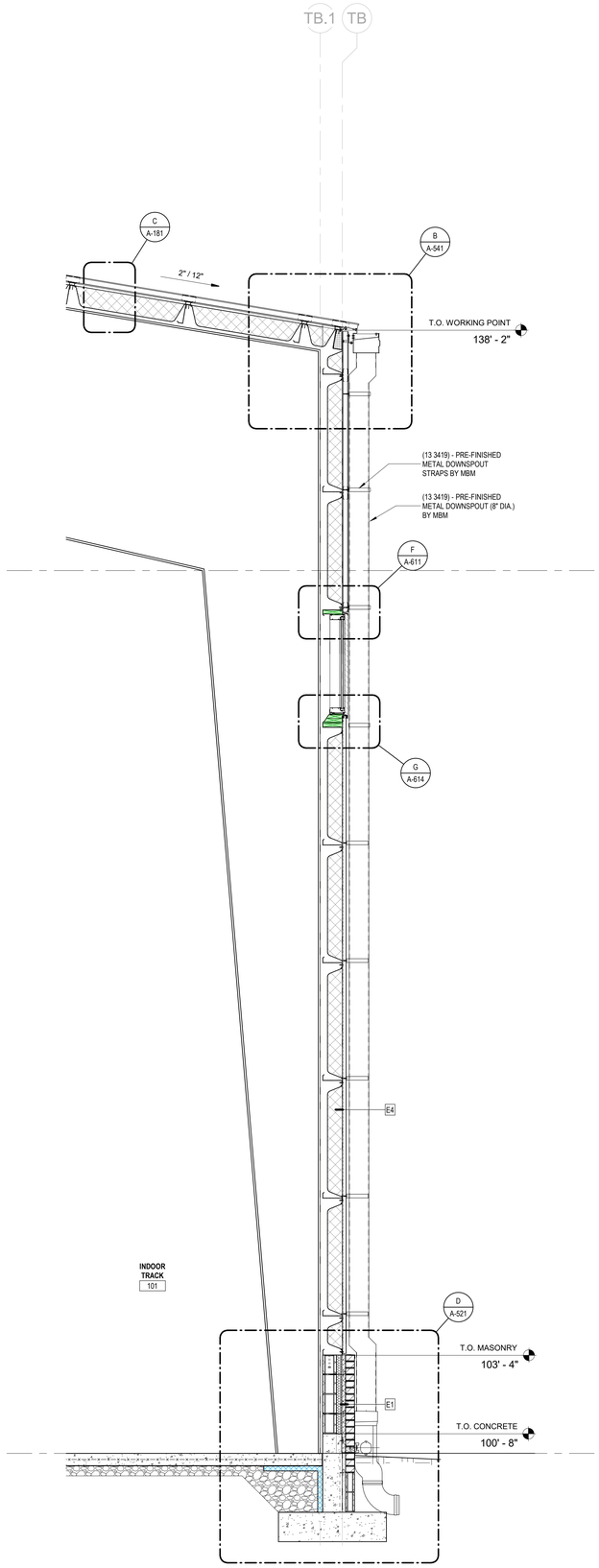

A WALL SECTION - PEMB WALL BRICK
1/2" = 1'-0"

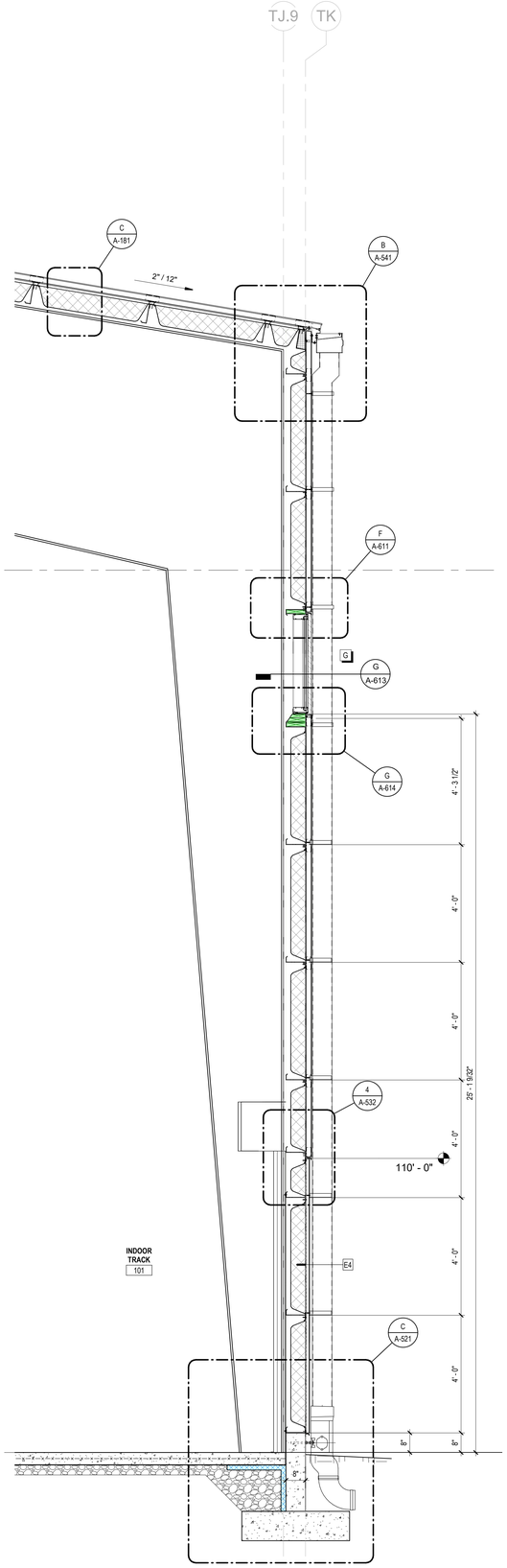

B WALL SECTION - PEMB WALL
1/2" = 1'-0"

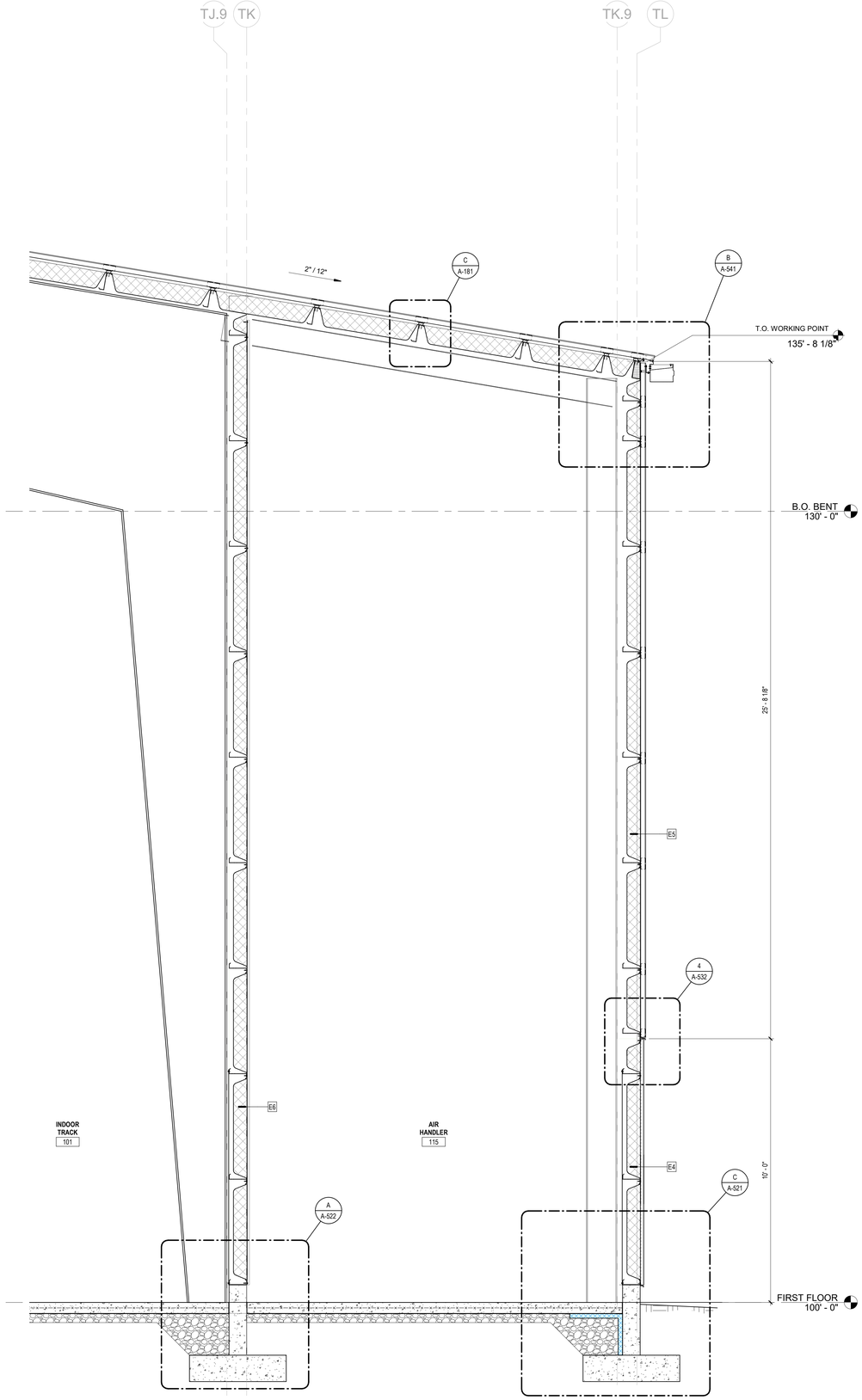

C WALL SECTION - PEMB AIR HANDLER
1/2" = 1'-0"

JRA architects
3225 Summit Square Place, Suite 200
Lexington, Kentucky 40509
859.252.6781

NOT FOR CONSTRUCTION

RESERVED FOR AHJ STAMP

RFP 2 DRAWINGS

UK INDOOR TRACK FACILITY
UNIVERSITY OF KENTUCKY
700 SPORTS CENTER DRIVE LEXINGTON, KENTUCKY 40506

ARCHITECTURAL

PROJECT	202258
DATE	08/31/2022

REVISIONS

No.	Description	Date

JRA ARCHITECTS HAS RETAINED AN ELECTRONIC VERSION OF THESE DRAWINGS. THE CLIENT AGREES NOT TO REUSE THESE DRAWINGS - IN ELECTRONIC OR ANY OTHER FORMAT - IN WHOLE, OR IN PART, FOR ANY PURPOSE OTHER THAN FOR THE PROJECT. THE CLIENT AGREES NOT TO TRANSFER THESE ELECTRONIC FILES TO OTHERS WITHOUT THE PRIOR WRITTEN CONSENT OF THE ARCHITECT. THE CLIENT FURTHER AGREES TO WAIVE ALL CLAIMS AGAINST THE ARCHITECT RESULTING IN ANY WAY FROM ANY CHANGES OR ALTERATIONS TO OR REUSE OF THE ELECTRONIC FILES FOR ANY OTHER PROJECT BY ANYONE OTHER THAN THE ARCHITECT.

WALL SECTIONS (PEMB)

A-351

COPYRIGHT 2022 - JRA, INC.

C:\Users\lburnett\OneDrive - JRA Architects\Documents\202258 - UK Indoor Track_lburnettNA4L5.rvt
9/2/2022 3:23:40 PM

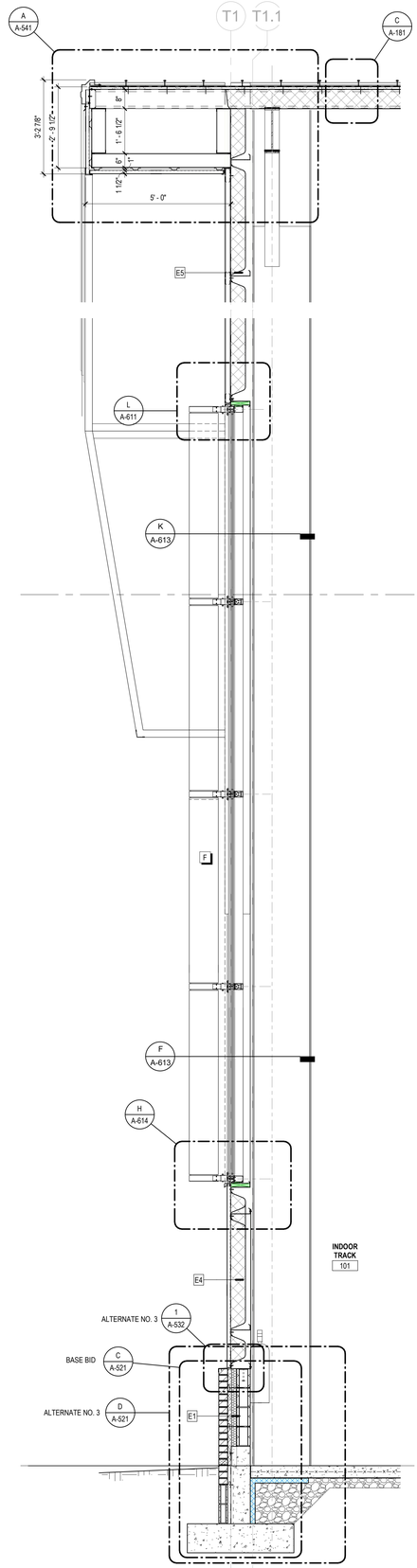

A WALL SECTION - PEMB CW WINDOW
1/2" = 1'-0"

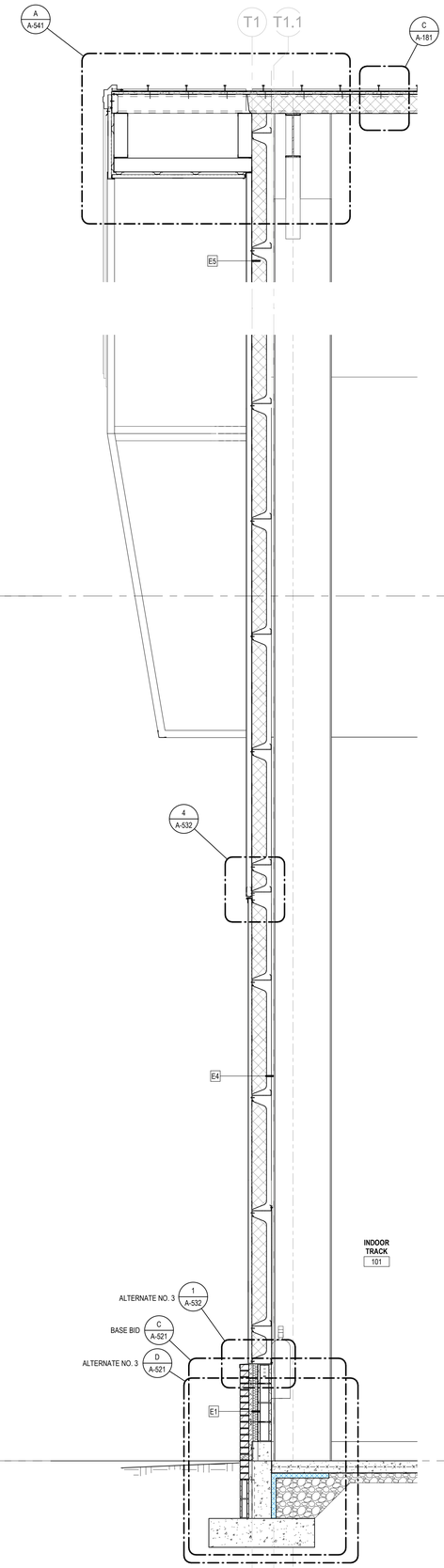

B WALL SECTION - PEMB / BRICK
1/2" = 1'-0"

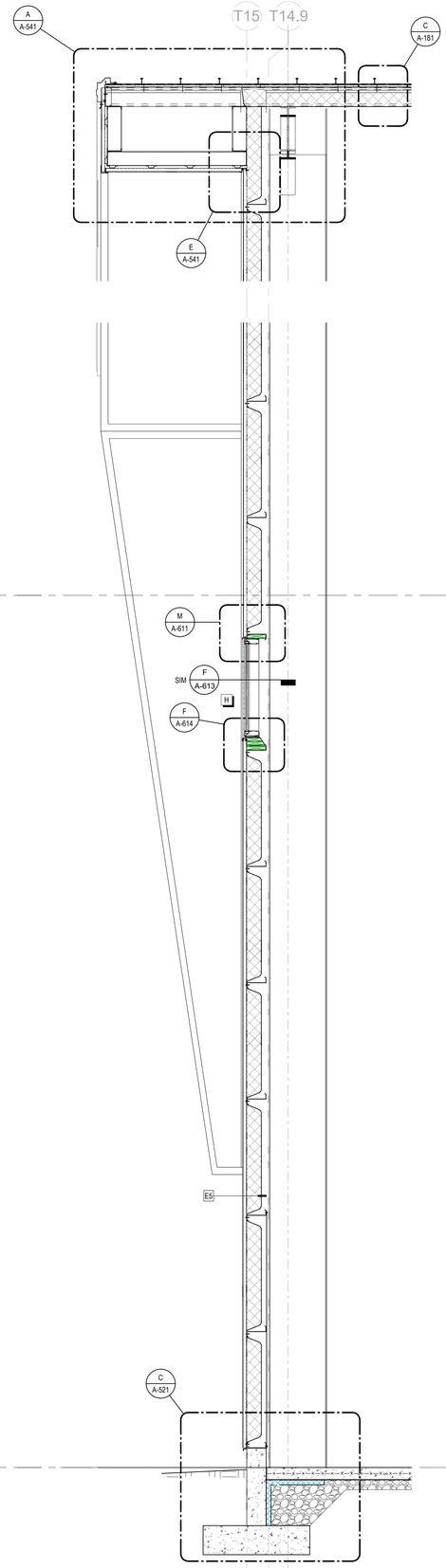

C WALL SECTION - PEMB / METAL
1/2" = 1'-0"

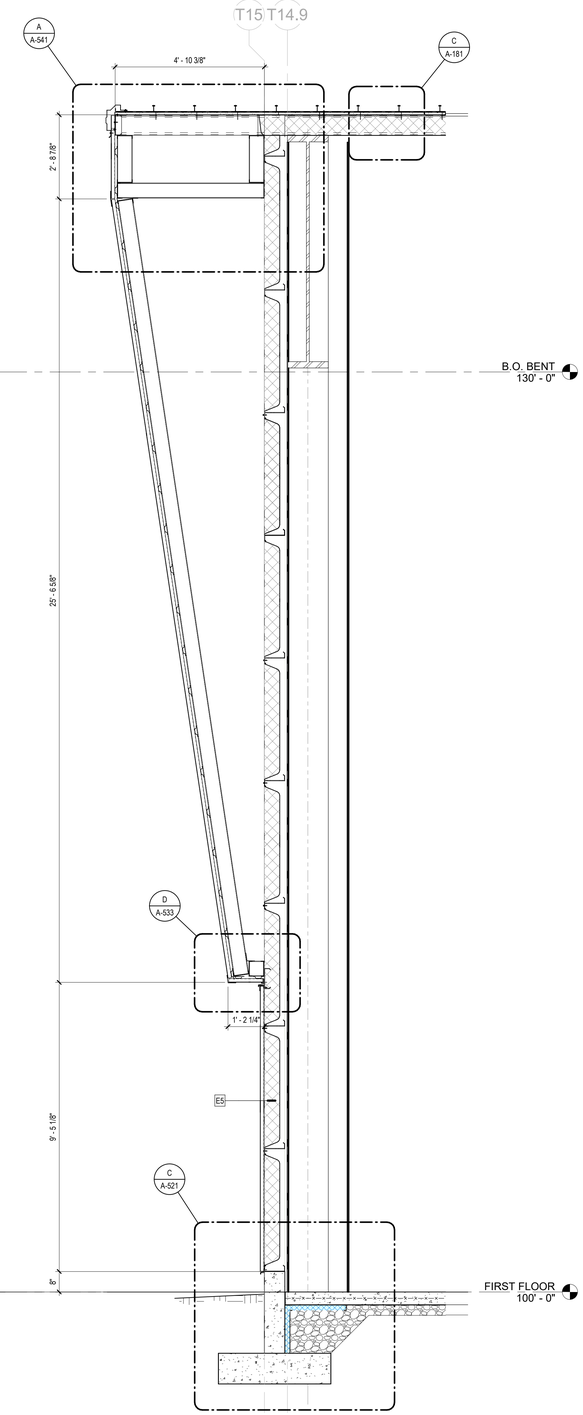

D WALL SECTION - PEMB RAKE WING
1/2" = 1'-0"

JRA architects
3225 Summit Square Place, Suite 200
Lexington, Kentucky 40509
859.252.6781

NOT FOR CONSTRUCTION

RESERVED FOR AHJ STAMP

RFP 2 DRAWINGS

UK INDOOR TRACK FACILITY
UNIVERSITY OF KENTUCKY
700 SPORTS CENTER DRIVE LEXINGTON, KENTUCKY 40506

ARCHITECTURAL

PROJECT	202258
DATE	8/31/2022

REVISIONS

No.	Description	Date

JRA ARCHITECTS HAS RETAINED AN ELECTRONIC VERSION OF THESE DRAWINGS. THE CLIENT AGREES NOT TO REUSE THESE DRAWINGS - IN ELECTRONIC OR PAPER FORM - IN WHOLE OR IN PART, FOR ANY PURPOSE OTHER THAN FOR THE PROJECT. THE CLIENT AGREES NOT TO TRANSFER THESE ELECTRONIC FILES TO OTHERS WITHOUT THE PRIOR WRITTEN CONSENT OF THE ARCHITECT. THE CLIENT FURTHER AGREES TO WAIVE ALL CLAIMS AGAINST THE ARCHITECT RESULTING IN ANY WAY FROM ANY UNAUTHORIZED CHANGES TO OR REUSE OF THE ELECTRONIC FILES FOR ANY OTHER PROJECT BY ANYONE OTHER THAN THE ARCHITECT.

WALL SECTIONS (PEMB)

A-352

COPYRIGHT 2022 - JRA, INC.

C:\Users\lburnett\OneDrive - JRA Architects\Documents\202258 - UK Indoor Track_lburnettNAL5.rvt
9/7/2022 3:06:14 PM

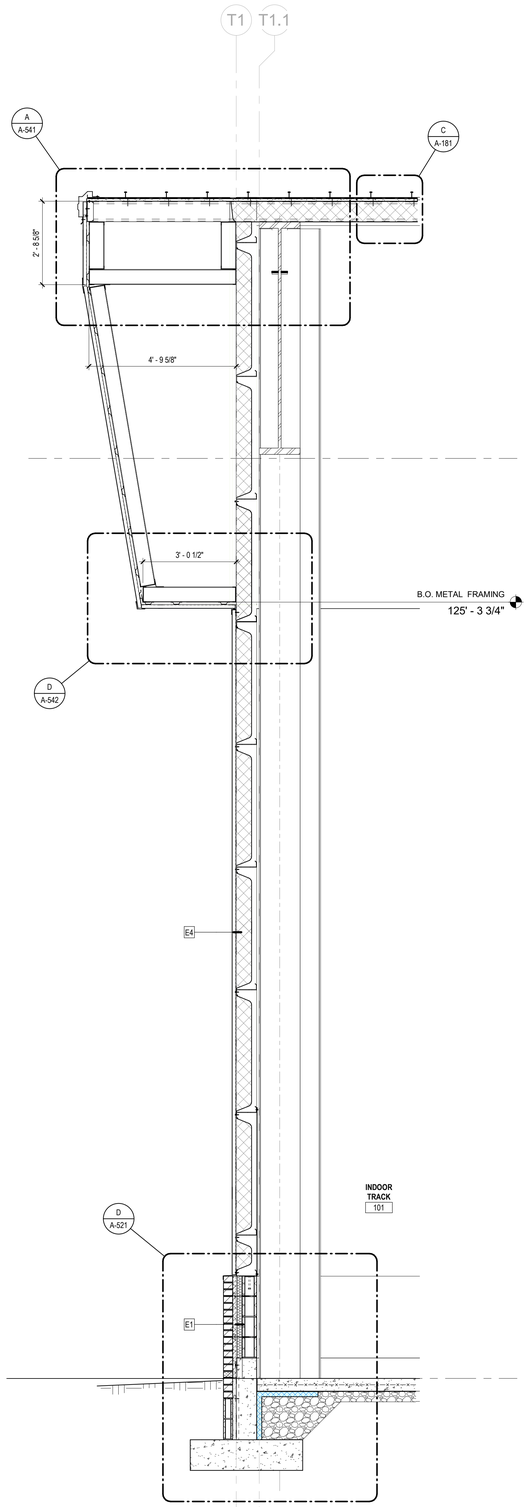

A WALL SECTION - PEMB THRU WING
1/2" = 1'-0"

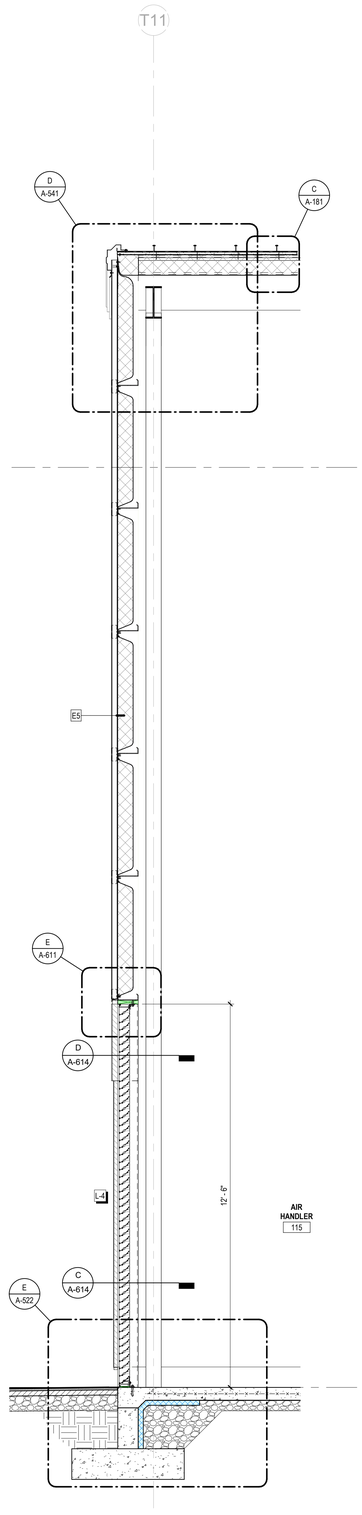

B WALL SECTION - AIR HANDLER SIDE
1/2" = 1'-0"

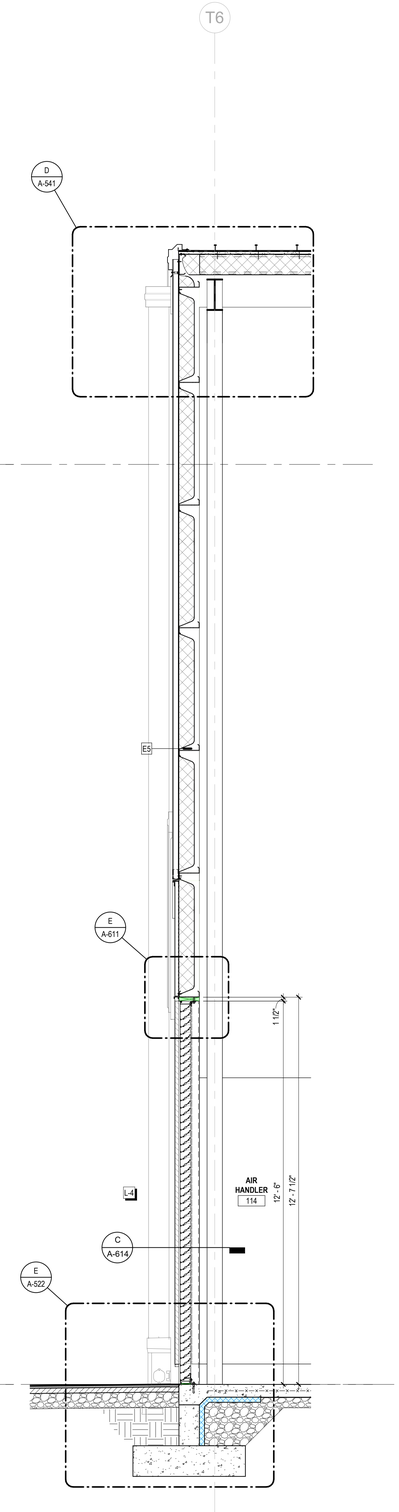

C WALL SECTION - AIR HANDLER (SIDE)
1/2" = 1'-0"

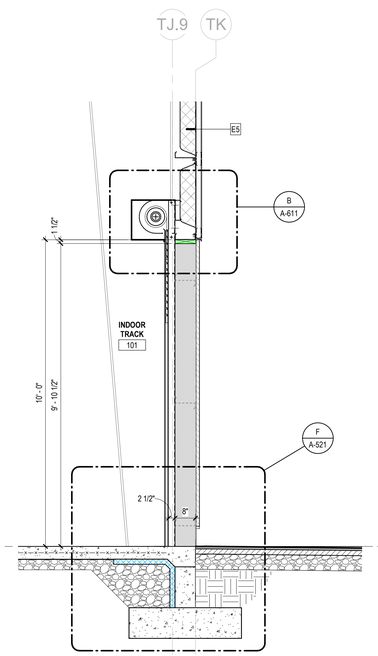

E WALL SECTION - PEMB OH DOOR
1/2" = 1'-0"

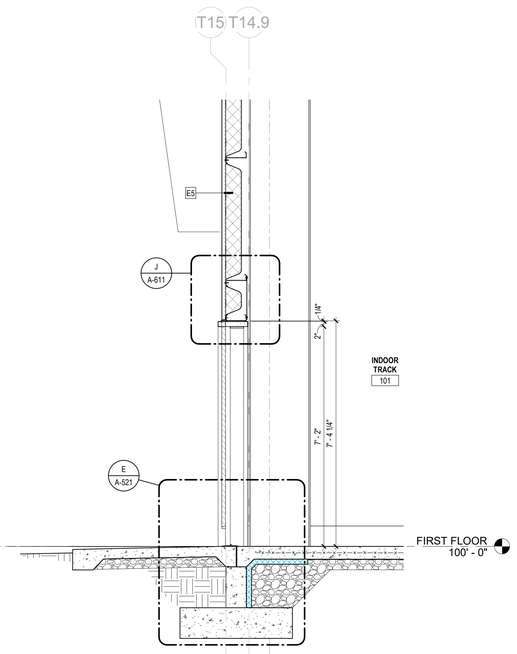

F WALL SECTION - PEMB RAKE THRU DOOR
1/2" = 1'-0"

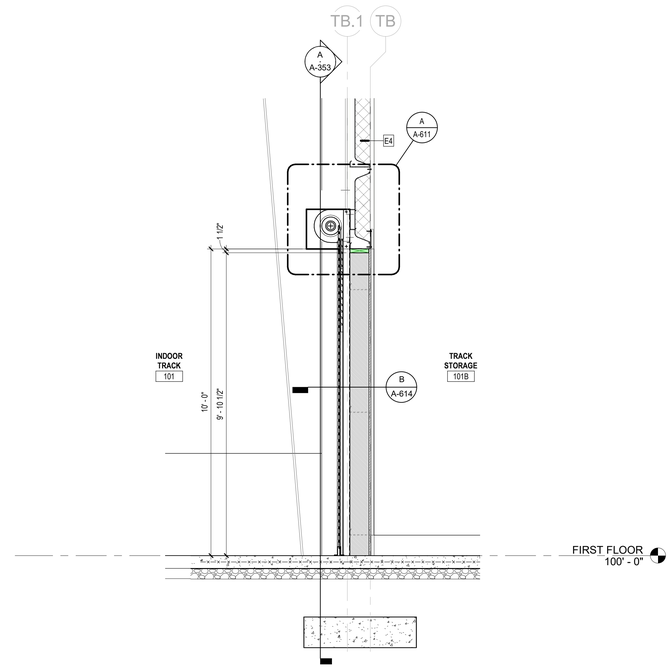

D WALL SECTION - PEMB OH DOOR (INDOOR)
1/2" = 1'-0"

C:\Users\lburnett\OneDrive - JRA Architects\Documents\202258 - UK Indoor Track_lburnettAN4L5.rvt

9/2/2022 3:23:45 PM

JRA architects
3225 Summit Square Place, Suite 200
Lexington, Kentucky 40509
859.252.6781

NOT FOR CONSTRUCTION

RESERVED FOR AHJ STAMP

RFP 2 DRAWINGS

UK INDOOR TRACK FACILITY

UNIVERSITY OF KENTUCKY
700 SPORTS CENTER DRIVE LEXINGTON, KENTUCKY 40506

ARCHITECTURAL

PROJECT	202258
DATE	08/31/2022

REVISIONS

No.	Description	Date

JRA ARCHITECTS HAS RETAINED AN ELECTRONIC VERSION OF THESE DRAWINGS. THE CLIENT AGREES NOT TO REUSE THESE DRAWINGS - IN ELECTRONIC OR ANY OTHER FORMAT - IN WHOLE, OR IN PART, FOR ANY PURPOSE OTHER THAN FOR THE PROJECT. THE CLIENT AGREES NOT TO TRANSFER THESE ELECTRONIC FILES TO OTHERS WITHOUT THE PRIOR WRITTEN CONSENT OF THE ARCHITECT. THE CLIENT FURTHER AGREES TO WAIVE ALL CLAIMS AGAINST THE ARCHITECT RESULTING IN ANY WAY FROM ANY UNAUTHORIZED CHANGES TO OR REUSE OF THE ELECTRONIC FILES FOR ANY OTHER PROJECT BY ANYONE OTHER THAN THE ARCHITECT.

WALL SECTIONS (PEMB)

A-353

COPYRIGHT 2022 - JRA, INC.

C:\Users\lburnett\OneDrive - JRA Architects\Documents\202258 - UK Indoor Track_lburnettNA4L5.rvt

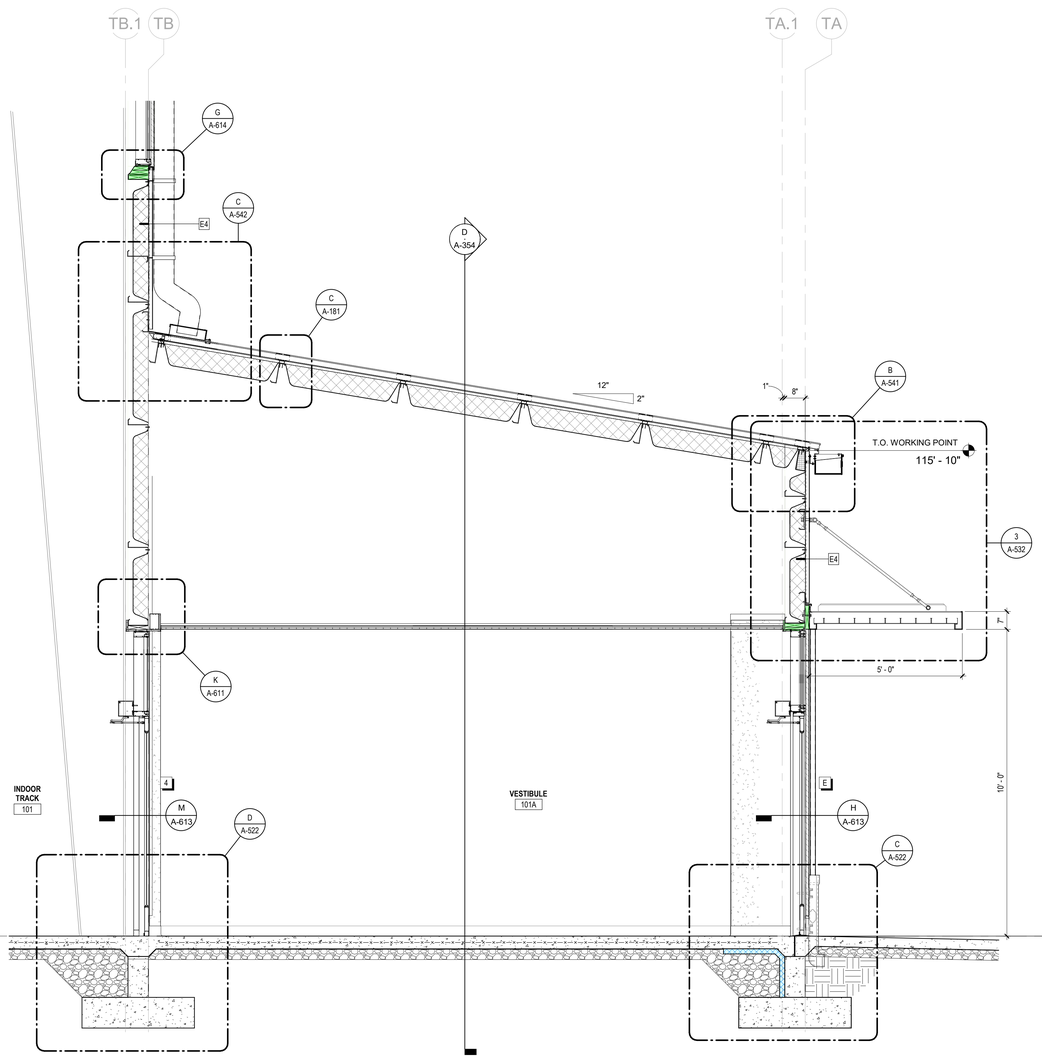

A WALL SECTION - TRACK STORAGE
1/2" = 1'-0"

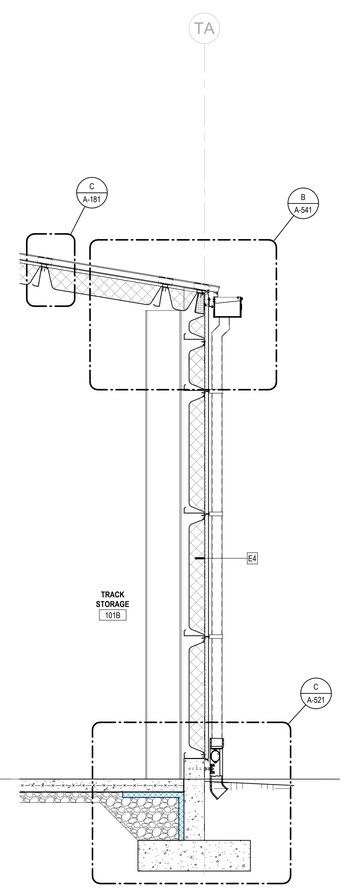

B WALL SECTION - TRACK STORAGE (WALL)
1/2" = 1'-0"

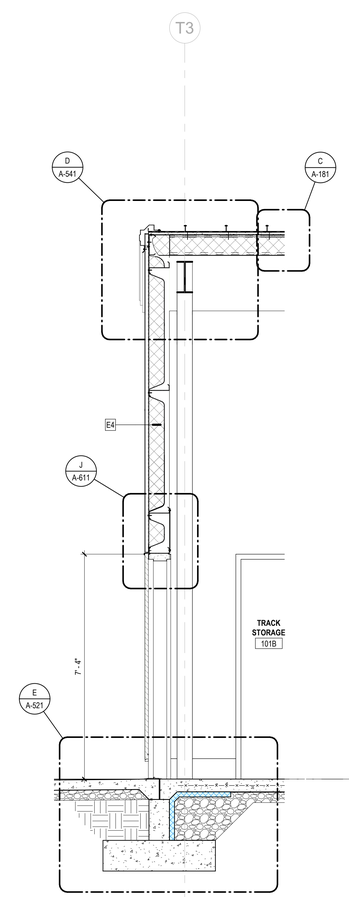

C WALL SECTION - TRACK STORAGE (SIDE)
1/2" = 1'-0"

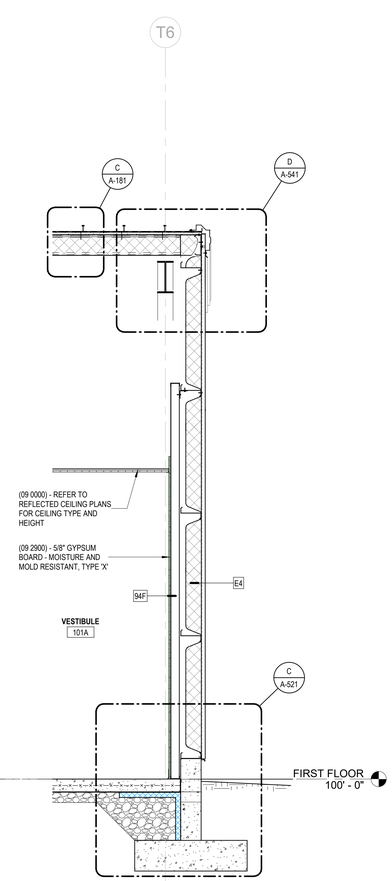

D WALL SECTION - VESTIBULE (SIDE)
1/2" = 1'-0"

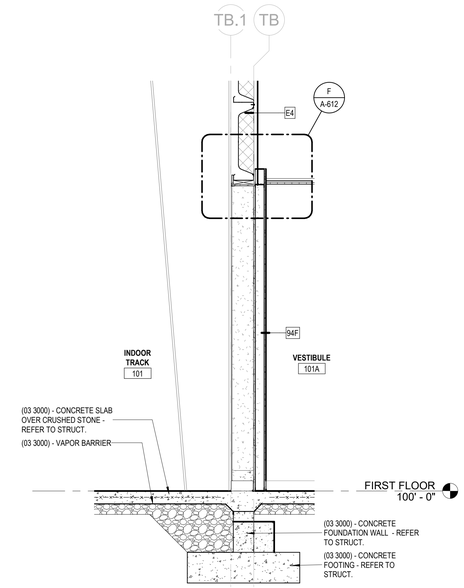

E WALL SECTION - VESTIBULE
1/2" = 1'-0"

JRA architects
3225 Summit Square Place, Suite 200
Lexington, Kentucky 40509
859.252.6781

NOT FOR CONSTRUCTION

RESERVED FOR AHJ STAMP

RFP 2 DRAWINGS

UK INDOOR TRACK FACILITY
UNIVERSITY OF KENTUCKY
700 SPORTS CENTER DRIVE LEXINGTON, KENTUCKY 40506

ARCHITECTURAL

PROJECT	202258
DATE	08/31/2022

REVISIONS

No.	Description	Date

JRA ARCHITECTS HAS RETAINED AN ELECTRONIC VERSION OF THESE DRAWINGS. THE CLIENT AGREES NOT TO REUSE THESE DRAWINGS - IN ELECTRONIC OR ANY OTHER FORMAT - IN WHOLE, OR IN PART, FOR ANY PURPOSE OTHER THAN FOR THIS PROJECT. THE CLIENT AGREES NOT TO TRANSFER THESE ELECTRONIC FILES TO OTHERS WITHOUT THE PRIOR WRITTEN CONSENT OF THE ARCHITECT. THE CLIENT FURTHER AGREES TO WAIVE ALL CLAIMS AGAINST THE ARCHITECT RESULTING IN ANY WAY FROM ANY UNAUTHORIZED CHANGES TO OR REUSE OF THE ELECTRONIC FILES FOR ANY OTHER PROJECT BY ANYONE OTHER THAN THE ARCHITECT

WALL SECTIONS (PEMB)

A-354

COPYRIGHT 2022 - JRA, INC.

9/2/2022 3:23:47 PM

C:\Users\lburnett\OneDrive - JRA Architects\Documents\202258 - UK Indoor Track_lburnettNAL5.rvt

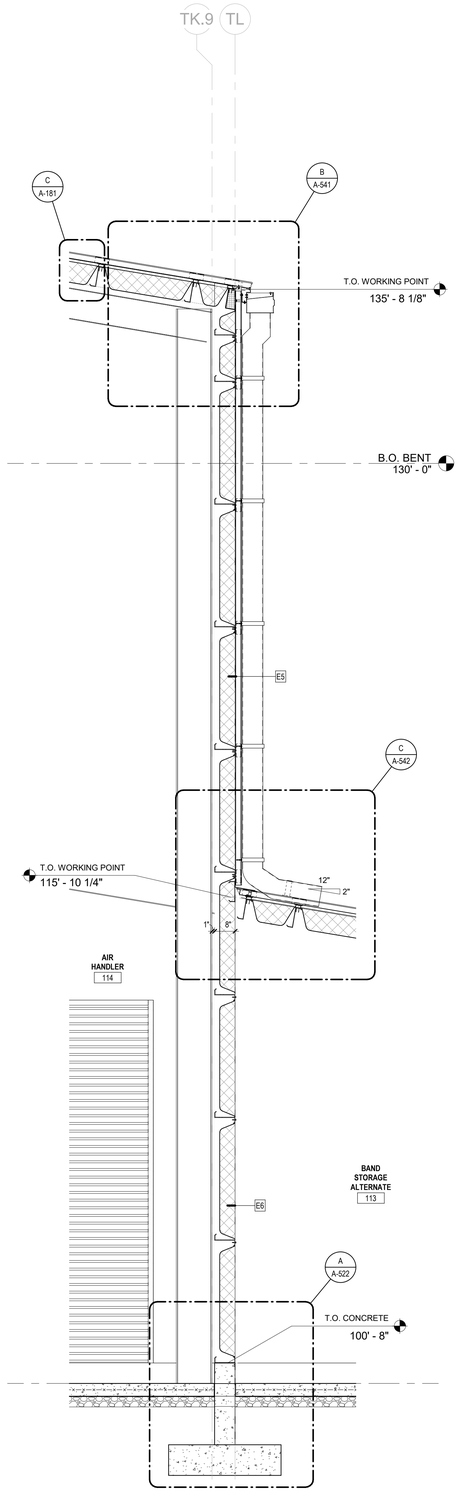

A WALL SECTION - BAND STORAGE/AIR HANDLER
1/2" = 1'-0"

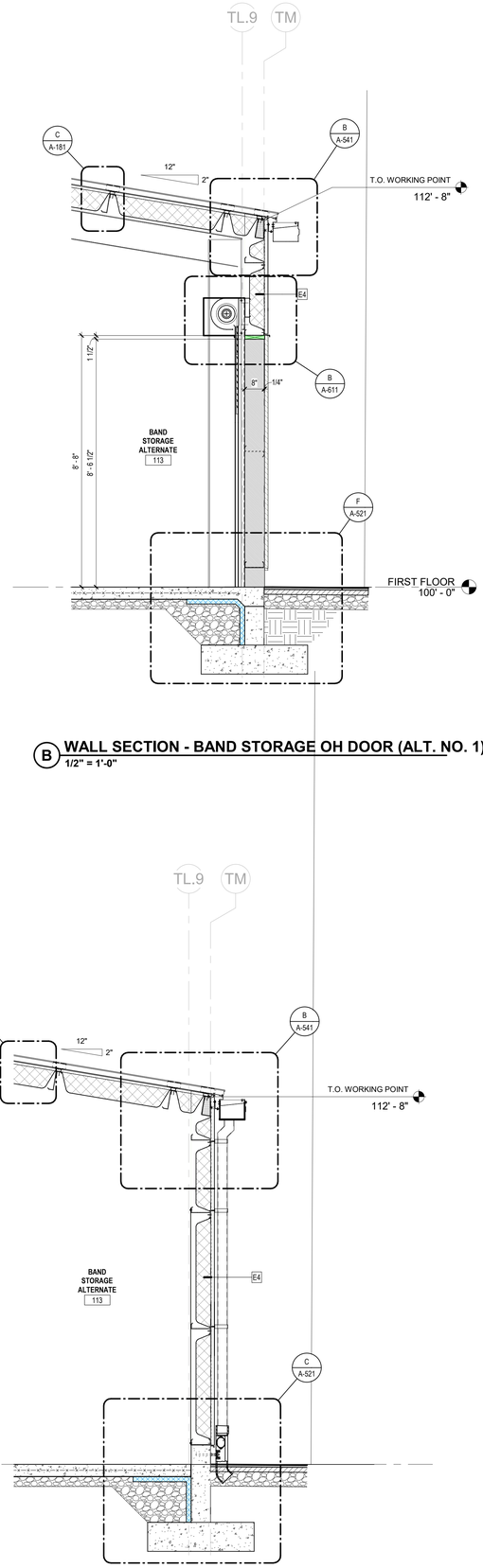

B WALL SECTION - BAND STORAGE OH DOOR (ALT. NO. 1)
1/2" = 1'-0"

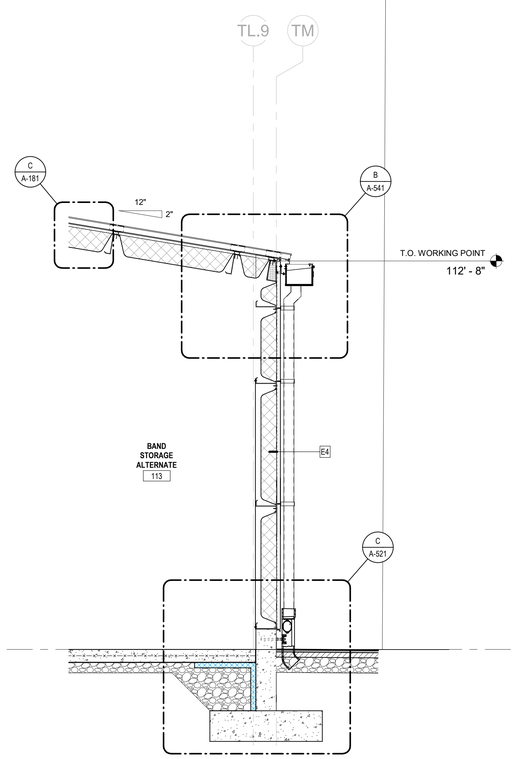

C WALL SECTION - BAND STORAGE (ALT. NO. 1)
1/2" = 1'-0"

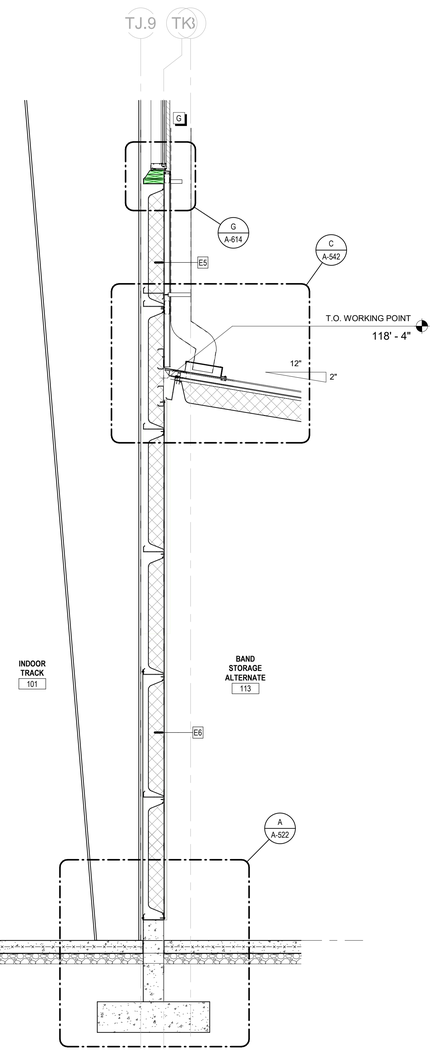

D WALL SECTION - BAND STORAGE (INTERIOR)
1/2" = 1'-0"

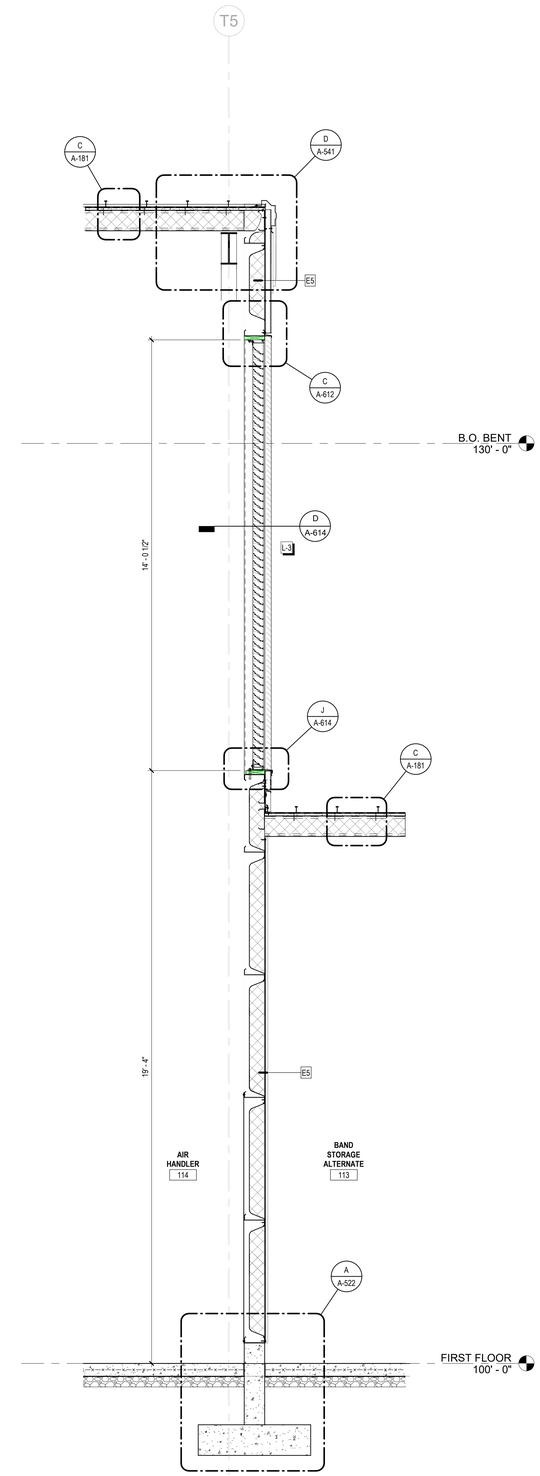

E WALL SECTION - HIGH LOUVER
1/2" = 1'-0"

JRA architects
3225 Summit Square Place, Suite 200
Lexington, Kentucky 40509
859.252.6781

NOT FOR CONSTRUCTION

RESERVED FOR AHJ STAMP

RFP 2 DRAWINGS

UK INDOOR TRACK FACILITY
UNIVERSITY OF KENTUCKY
700 SPORTS CENTER DRIVE LEXINGTON, KENTUCKY 40506

ARCHITECTURAL

PROJECT	202258
DATE	08/31/2022

REVISIONS

No.	Description	Date

JRA ARCHITECTS HAS RETAINED AN ELECTRONIC VERSION OF THESE DRAWINGS. THE CLIENT AGREES NOT TO REUSE THESE DRAWINGS - IN ELECTRONIC OR ANY OTHER FORMAT - ON WHOLE, OR IN PART, FOR ANY PURPOSE OTHER THAN THE PROJECT. THE CLIENT AGREES NOT TO TRANSFER THESE ELECTRONIC FILES TO OTHERS WITHOUT THE PRIOR WRITTEN CONSENT OF THE ARCHITECT. THE CLIENT FURTHER AGREES TO WAIVE ALL CLAIMS AGAINST THE ARCHITECT RESULTING IN ANY WAY FROM ANY UNAUTHORIZED CHANGES TO OR REUSE OF THE ELECTRONIC FILES FOR ANY OTHER PROJECT BY ANYONE OTHER THAN THE ARCHITECT.

WALL SECTIONS (PEMB ALT)

A-355

COPYRIGHT 2022 - JRA, INC.

9/2/2022 3:23:50 PM

C:\Users\lburnett\OneDrive - JRA Architects\Documents\202258 - UK Indoor Track_lburnettNAL5.rvt

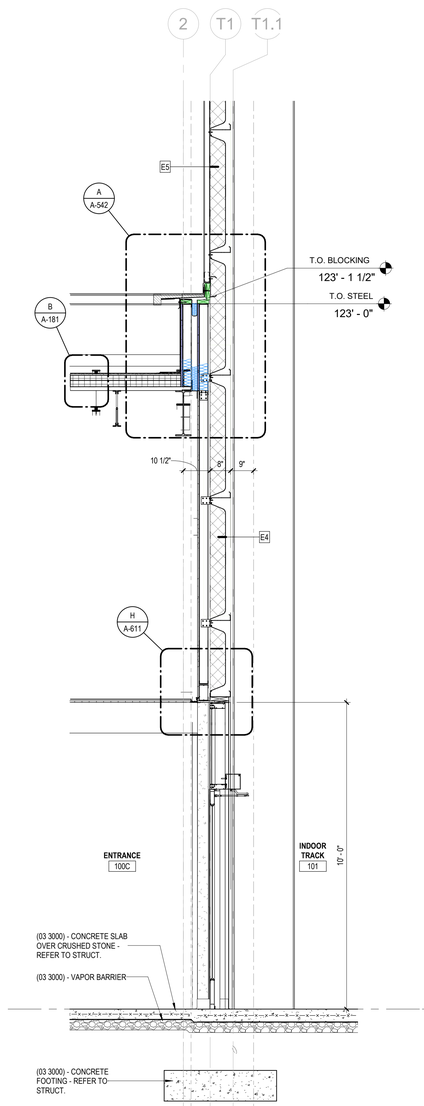

B WALL SECTION - INDOOR TRACK/ENTRANCE (EXP. JT.)
1/2" = 1'-0"

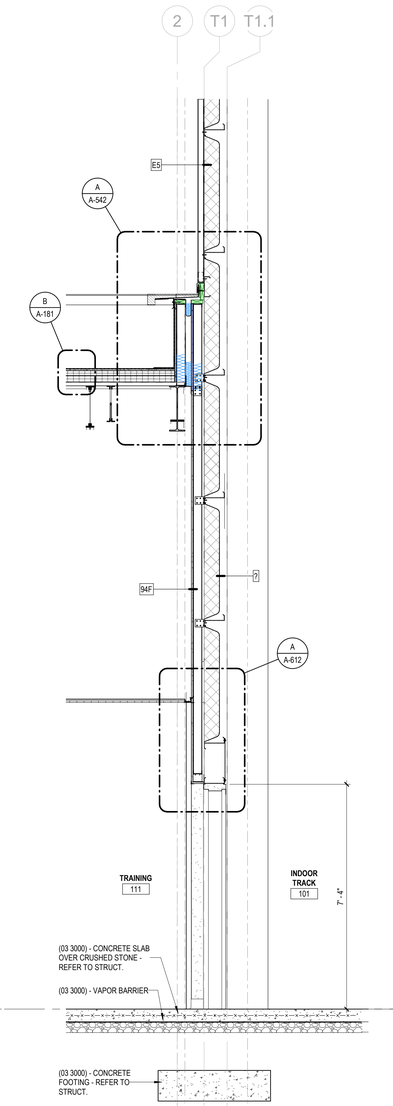

C WALL SECTION - HM DOOR (EXP. JT.)
1/2" = 1'-0"

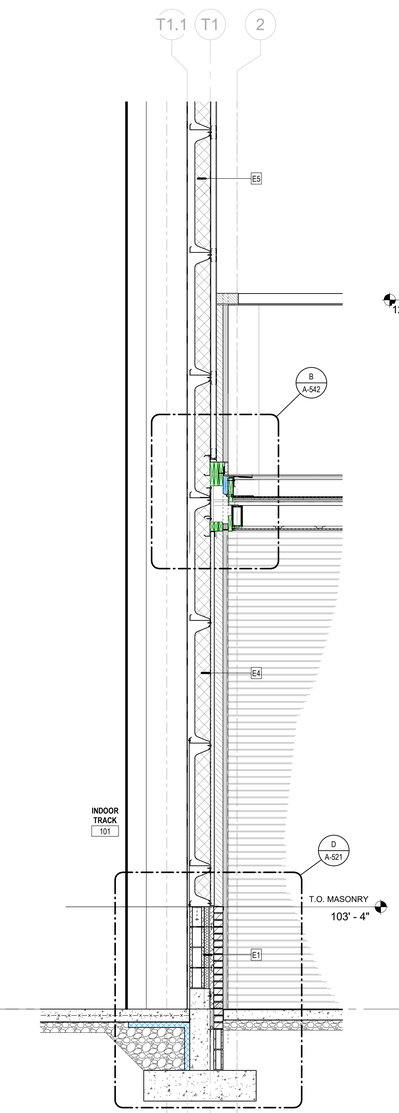

D WALL SECTION - CANOPY (EXP. JT.)
1/2" = 1'-0"

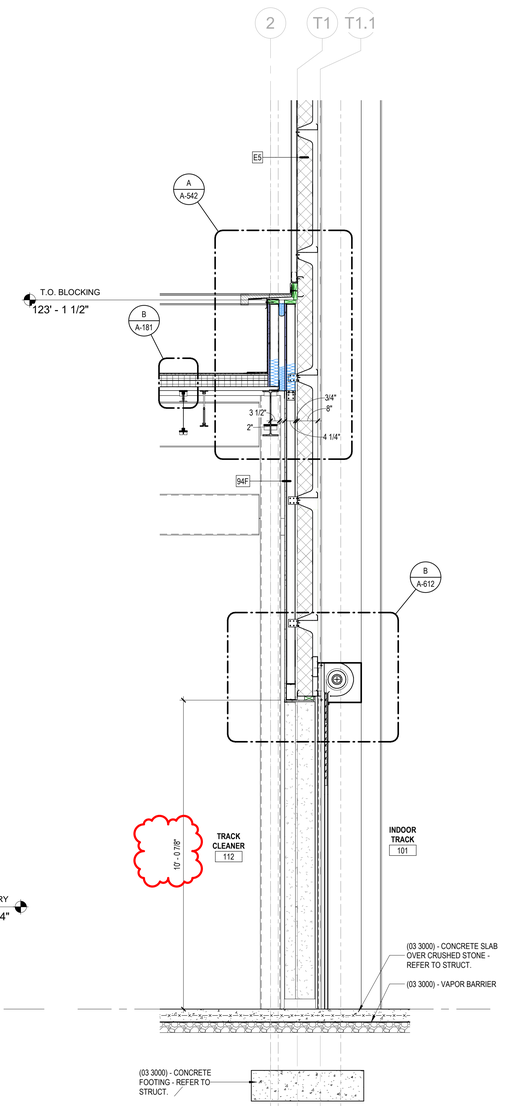

E WALL SECTION - OH DOOR (EXP. JT.)
1/2" = 1'-0"

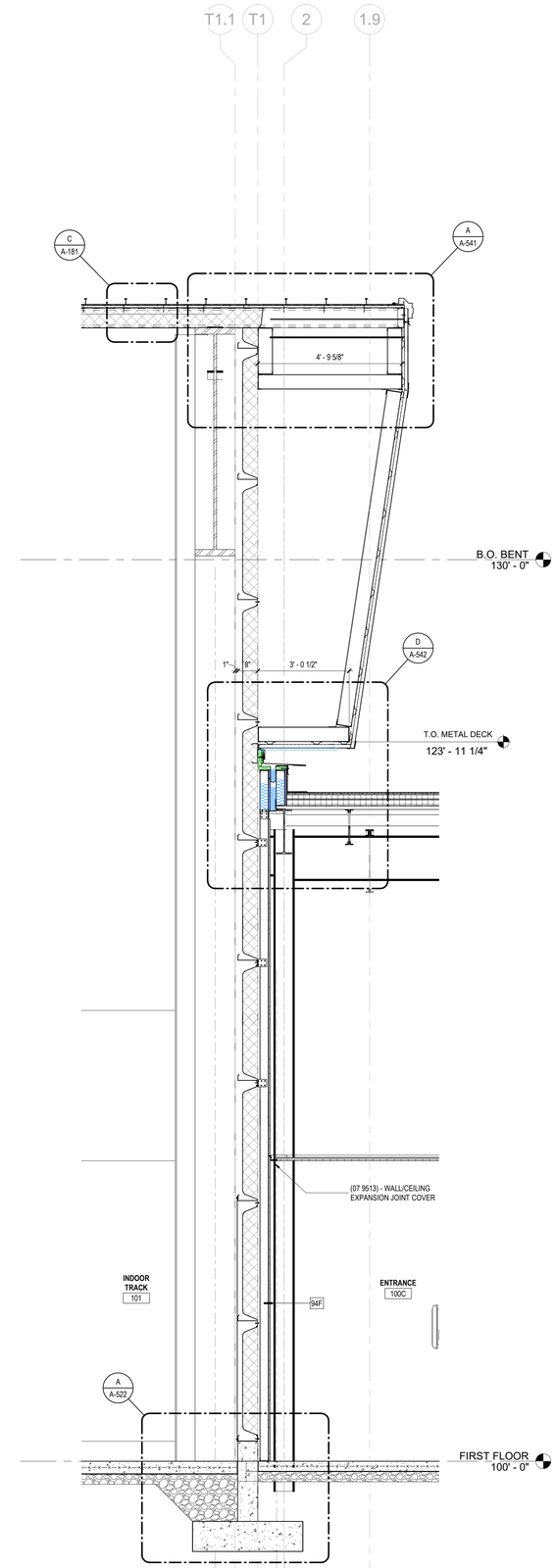

F WALL SECTION - PEMB WING EXPANSION JOINT
1/2" = 1'-0"

JRA architects
3225 Summit Square Place, Suite 200
Lexington, Kentucky 40509
859.252.6781

NOT FOR CONSTRUCTION

RESERVED FOR AHJ STAMP

RFP 2 DRAWINGS

UK INDOOR TRACK FACILITY
UNIVERSITY OF KENTUCKY
700 SPORTS CENTER DRIVE LEXINGTON, KENTUCKY 40506

ARCHITECTURAL

PROJECT	202258
DATE	08/31/2022

REVISIONS

No.	Description	Date
1	Revision 1	Date 1

JRA ARCHITECTS HAS RETAINED AN ELECTRONIC VERSION OF THESE DRAWINGS. THE CLIENT AGREES NOT TO REPRODUCE THESE FILES IN ELECTRONIC OR ANY OTHER FORMAT - IN WHOLE, OR IN PART, FOR ANY PURPOSE OTHER THAN FOR THE PROJECT. THE CLIENT AGREES NOT TO TRANSFER THESE ELECTRONIC FILES TO OTHERS WITHOUT THE PRIOR WRITTEN CONSENT OF THE ARCHITECT. THE CLIENT FURTHER AGREES TO WAIVE ALL CLAIMS AGAINST THE ARCHITECT RESULTING IN ANY WAY FROM ANY UNAUTHORIZED CHANGES TO OR REUSE OF THE ELECTRONIC FILES FOR ANY OTHER PROJECT BY ANYONE OTHER THAN THE ARCHITECT.

WALL SECTIONS (PEMB EJ)

A-356

COPYRIGHT 2022 - JRA, INC.

9/2/2022 3:23:52 PM

C:\Users\lburnett\OneDrive - JRA Architects\Documents\202258 - UK Indoor Track_lburnettNAL5.rvt

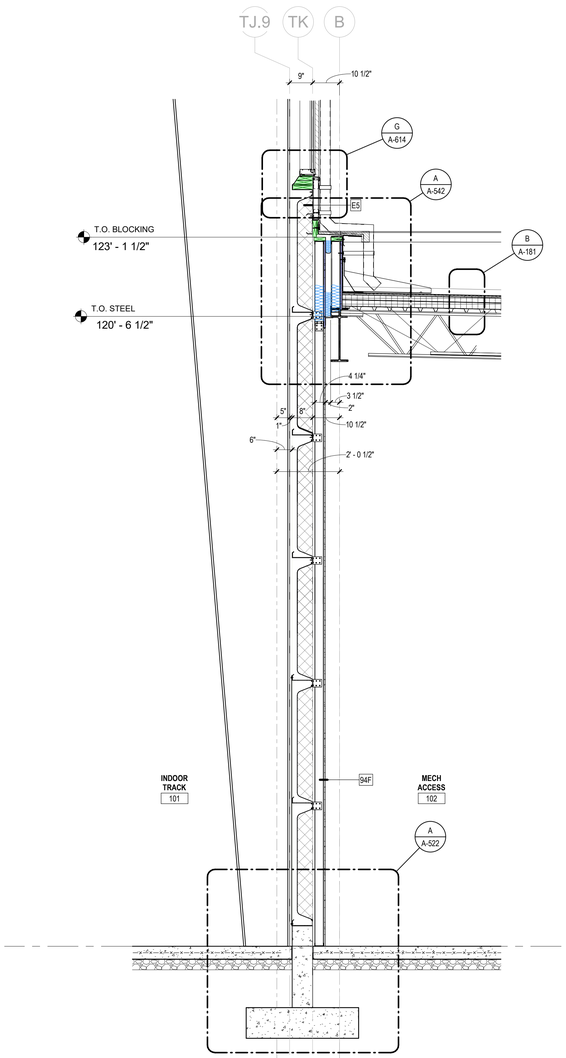

A WALL SECTION - MECH ACCESS (EXP. JT.)
1/2" = 1'-0"

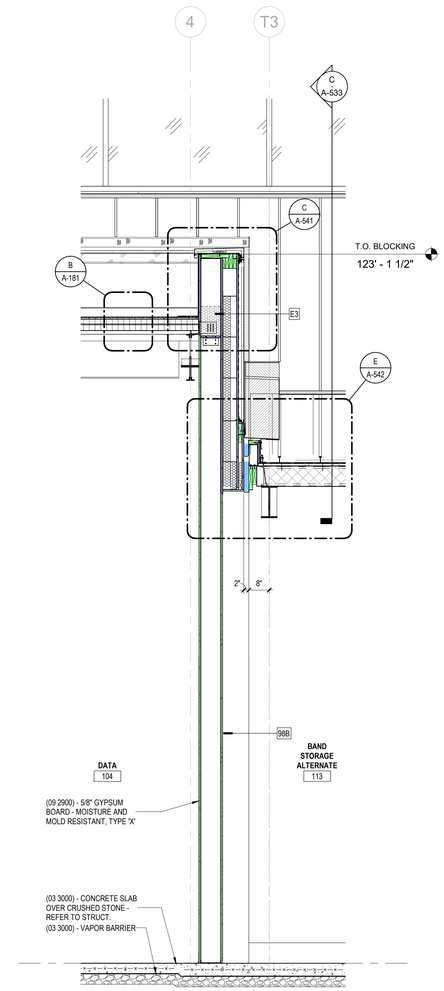

B WALL SECTION - BAND STORAGE / MECHANICAL
1/2" = 1'-0"

JRA architects
3225 Summit Square Place, Suite 200
Lexington, Kentucky 40509
859.252.6781

NOT FOR CONSTRUCTION

RESERVED FOR AHJ STAMP

RFP 2 DRAWINGS

UK INDOOR TRACK FACILITY
UNIVERSITY OF KENTUCKY
700 SPORTS CENTER DRIVE LEXINGTON, KENTUCKY 40506

ARCHITECTURAL

PROJECT	202258
DATE	08/31/2022

REVISIONS

No.	Description	Date

JRA ARCHITECTS HAS RETAINED AN ELECTRONIC VERSION OF THESE DRAWINGS. THE CLIENT AGREES NOT TO REUSE THESE DRAWINGS - IN ELECTRONIC OR ANY OTHER FORMAT - IN WHOLE, OR IN PART, FOR ANY PURPOSE OTHER THAN FOR THE PROJECT. THE CLIENT AGREES NOT TO TRANSFER THESE ELECTRONIC FILES TO ANYONE OTHER THAN THE CLIENT WITHOUT CONSENT OF THE ARCHITECT. THE CLIENT FURTHER AGREES TO WAIVE ALL CLAIMS AGAINST THE ARCHITECT RESULTING IN ANY WAY FROM ANY UNAUTHORIZED CHANGES TO OR REUSE OF THE ELECTRONIC FILES FOR ANY OTHER PROJECT BY ANYONE OTHER THAN THE ARCHITECT.

WALL SECTIONS (PEMB EJ)

A-357

COPYRIGHT 2022 - JRA, INC.

9/2/2022 3:23:53 PM

C:\Users\lburnett\OneDrive - JRA Architects\Documents\202258 - UK Indoor Track_lburnettNAL5.rvt

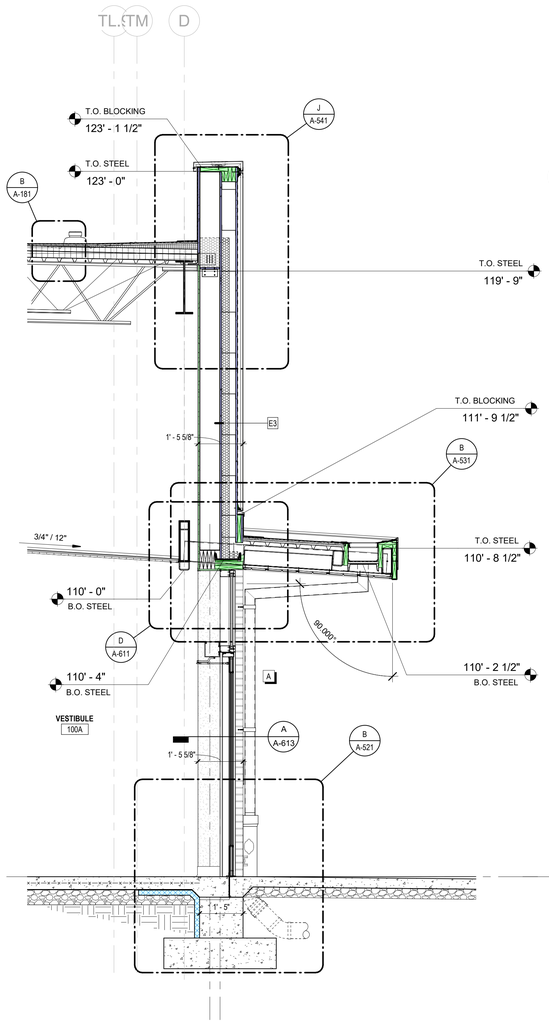

A WALL SECTION - LOW CANOPY AT DOOR
1/2" = 1'-0"

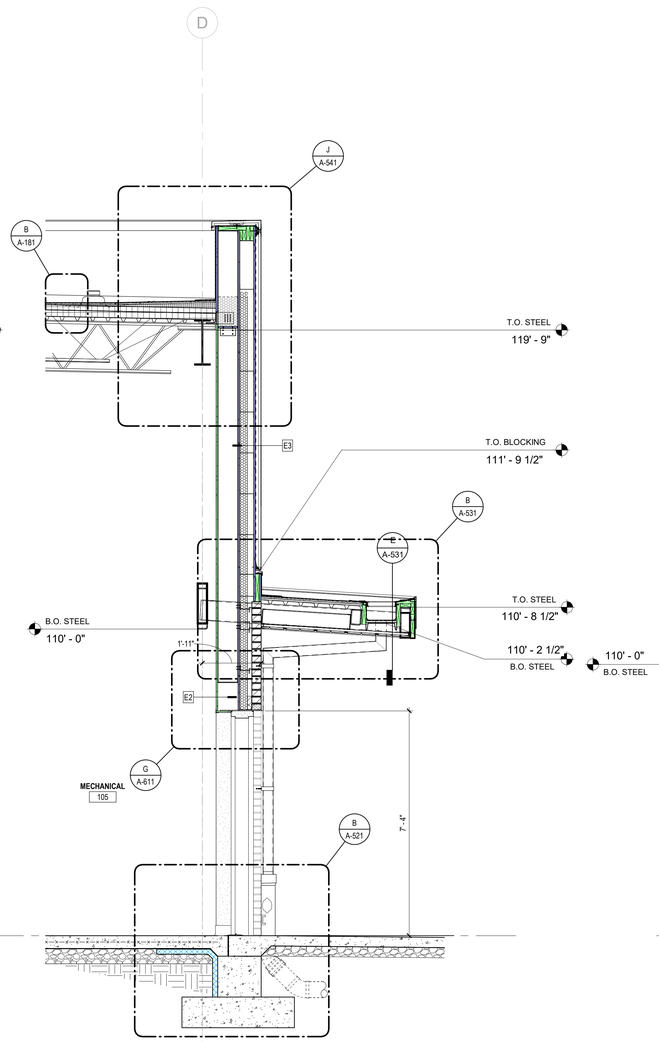

B WALL SECTION - MECH ROOM ENTRANCE DOOR
1/2" = 1'-0"

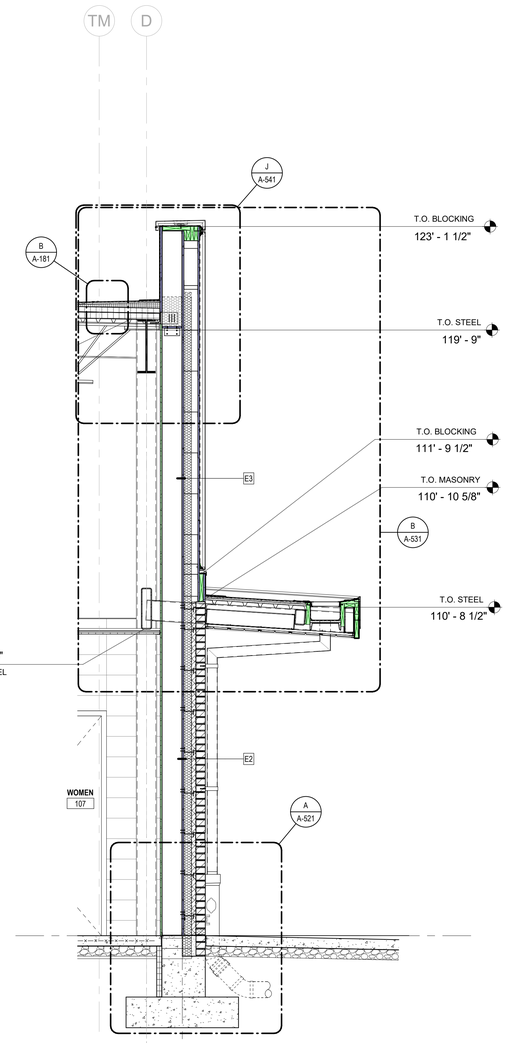

C WALL SECTION - LOW CANOPY
1/2" = 1'-0"

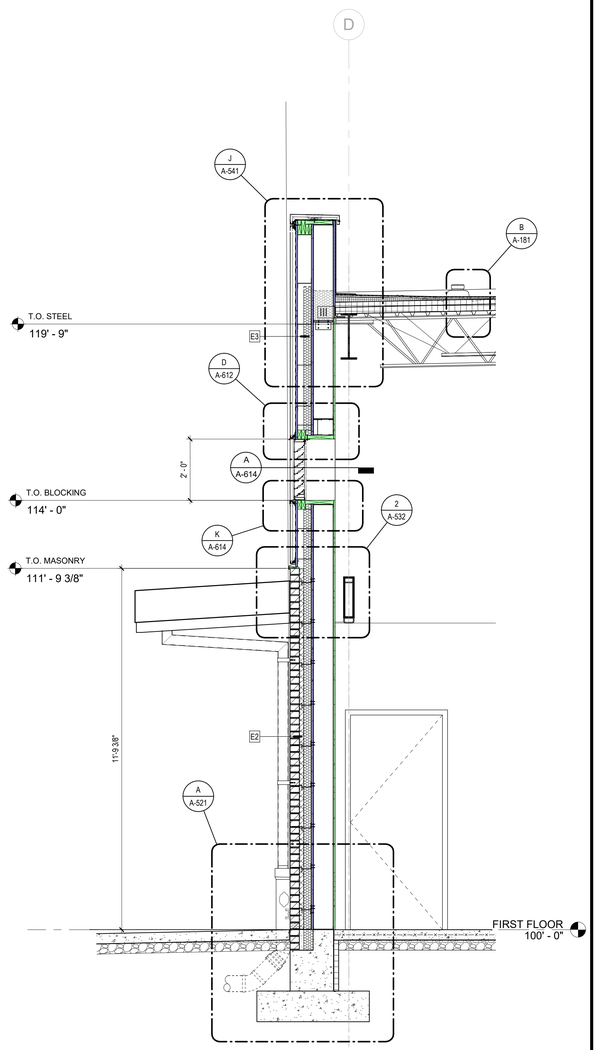

D WALL SECTION - MECHANICAL
1/2" = 1'-0"

9/2/2022 3:23:55 PM

JRA architects
3225 Summit Square Place, Suite 200
Lexington, Kentucky 40509
859.252.6781

NOT FOR CONSTRUCTION

RESERVED FOR AHJ STAMP

RFP 2 DRAWINGS

UK INDOOR TRACK FACILITY
UNIVERSITY OF KENTUCKY
700 SPORTS CENTER DRIVE LEXINGTON, KENTUCKY 40506

ARCHITECTURAL

PROJECT	202258
DATE	08/31/2022

REVISIONS

No.	Description	Date

JRA ARCHITECTS HAS RETAINED AN ELECTRONIC VERSION OF THESE DRAWINGS. THE CLIENT AGREES NOT TO REUSE THESE DRAWINGS - IN ELECTRONIC OR ANY OTHER FORMAT - IN WHOLE, OR IN PART, FOR ANY PURPOSE OTHER THAN FOR THIS PROJECT. THE CLIENT AGREES NOT TO TRANSFER THESE ELECTRONIC FILES TO OTHERS WITHOUT THE PRIOR WRITTEN CONSENT OF THE ARCHITECT. THE CLIENT FURTHER AGREES TO WAIVE ALL CLAIMS AGAINST THE ARCHITECT RESULTING IN ANY WAY FROM ANY UNAUTHORIZED CHANGES TO OR REUSE OF THE ELECTRONIC FILES FOR ANY OTHER PROJECT BY ANYONE OTHER THAN THE ARCHITECT

WALL SECTIONS

A-358

COPYRIGHT 2022 - JRA, INC.

C:\Users\Burnett\OneDrive - JRA Architects\Documents\202258 - UK Indoor Track_Burnett\NAL5.rvt

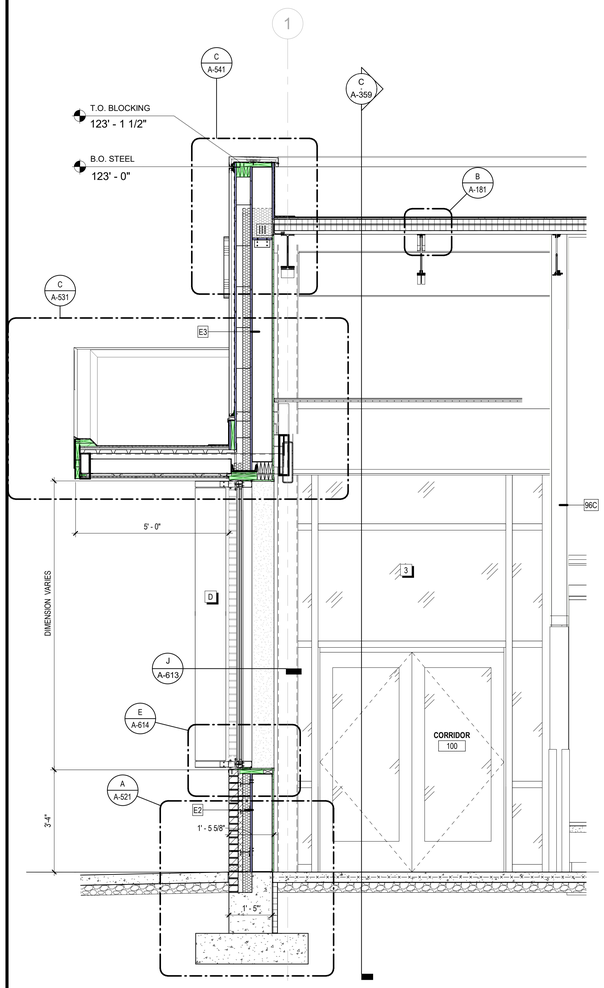

A WALL SECTION - THRU SLOPED WINDOW
1/2" = 1'-0"

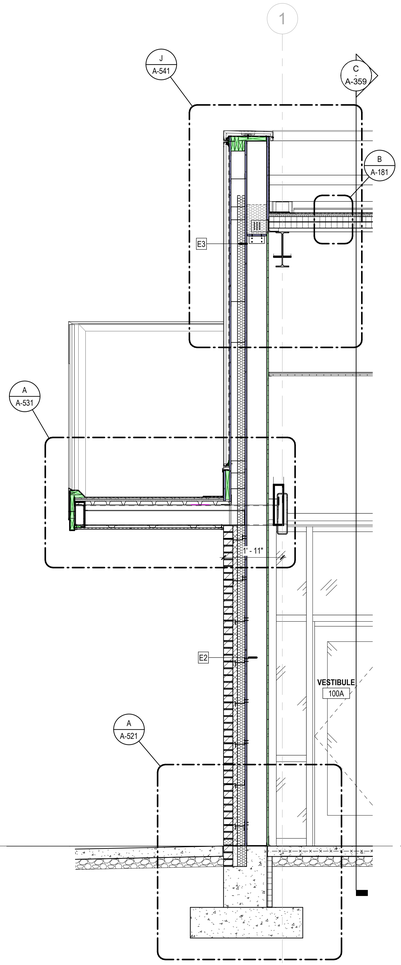

B WALL SECTION - ENTRANCE WALL
1/2" = 1'-0"

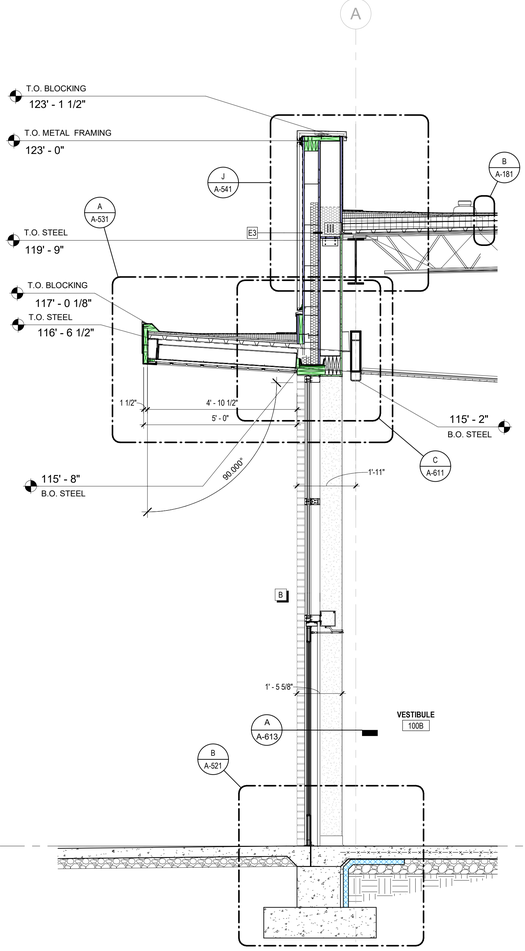

C WALL SECTION - HIGH CANOPY AT DOOR
1/2" = 1'-0"

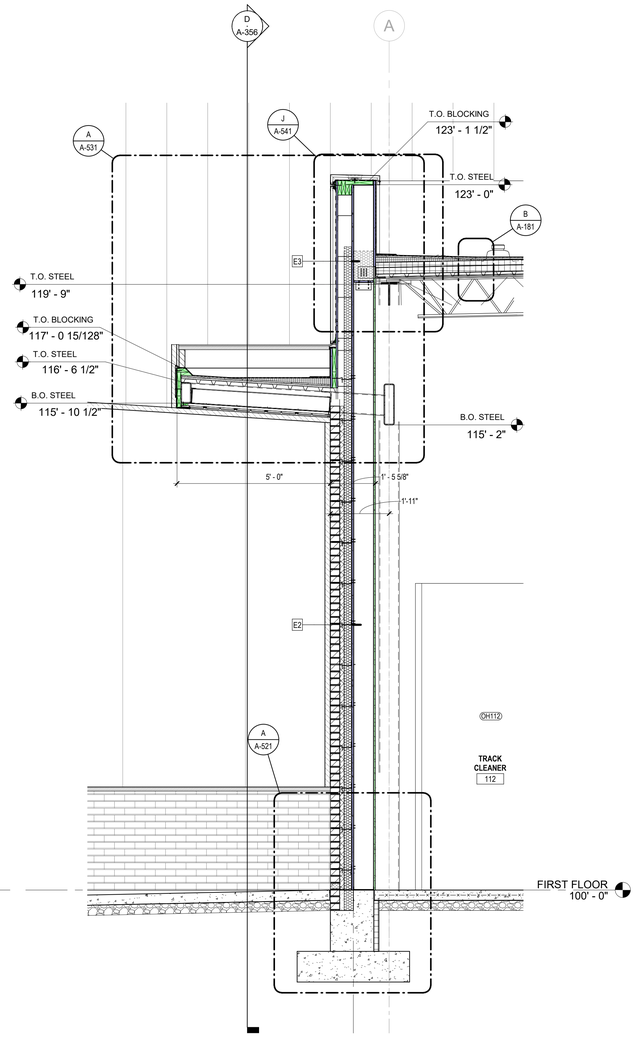

D WALL SECTION - HIGH CANOPY
1/2" = 1'-0"

JRA architects
3225 Summit Square Place, Suite 200
Lexington, Kentucky 40509
859.252.6781

NOT FOR CONSTRUCTION

RESERVED FOR AHJ STAMP

RFP 2 DRAWINGS

UK INDOOR TRACK FACILITY
UNIVERSITY OF KENTUCKY
700 SPORTS CENTER DRIVE LEXINGTON, KENTUCKY 40506

ARCHITECTURAL

PROJECT	202258
DATE	08/31/2022

REVISIONS

No.	Description	Date

JRA ARCHITECTS HAS RETAINED AN ELECTRONIC VERSION OF THESE DRAWINGS. THE CLIENT AGREES NOT TO REUSE THESE DRAWINGS - IN ELECTRONIC OR ANY OTHER FORMAT - IN WHOLE, OR IN PART, FOR ANY PURPOSE OTHER THAN FOR THE PROJECT. THE CLIENT AGREES NOT TO TRANSFER THESE ELECTRONIC FILES TO OTHERS WITHOUT THE PRIOR WRITTEN CONSENT OF THE ARCHITECT. THE CLIENT FURTHER AGREES TO WAIVE ALL CLAIMS ARISING IN ANY WAY FROM ANY UNAUTHORIZED CHANGES TO OR REUSE OF THE ELECTRONIC FILES FOR ANY OTHER PROJECT BY ANYONE OTHER THAN THE ARCHITECT.

WALL SECTIONS

A-359

COPYRIGHT 2022 - JRA, INC.

9/2/2022 3:23:58 PM

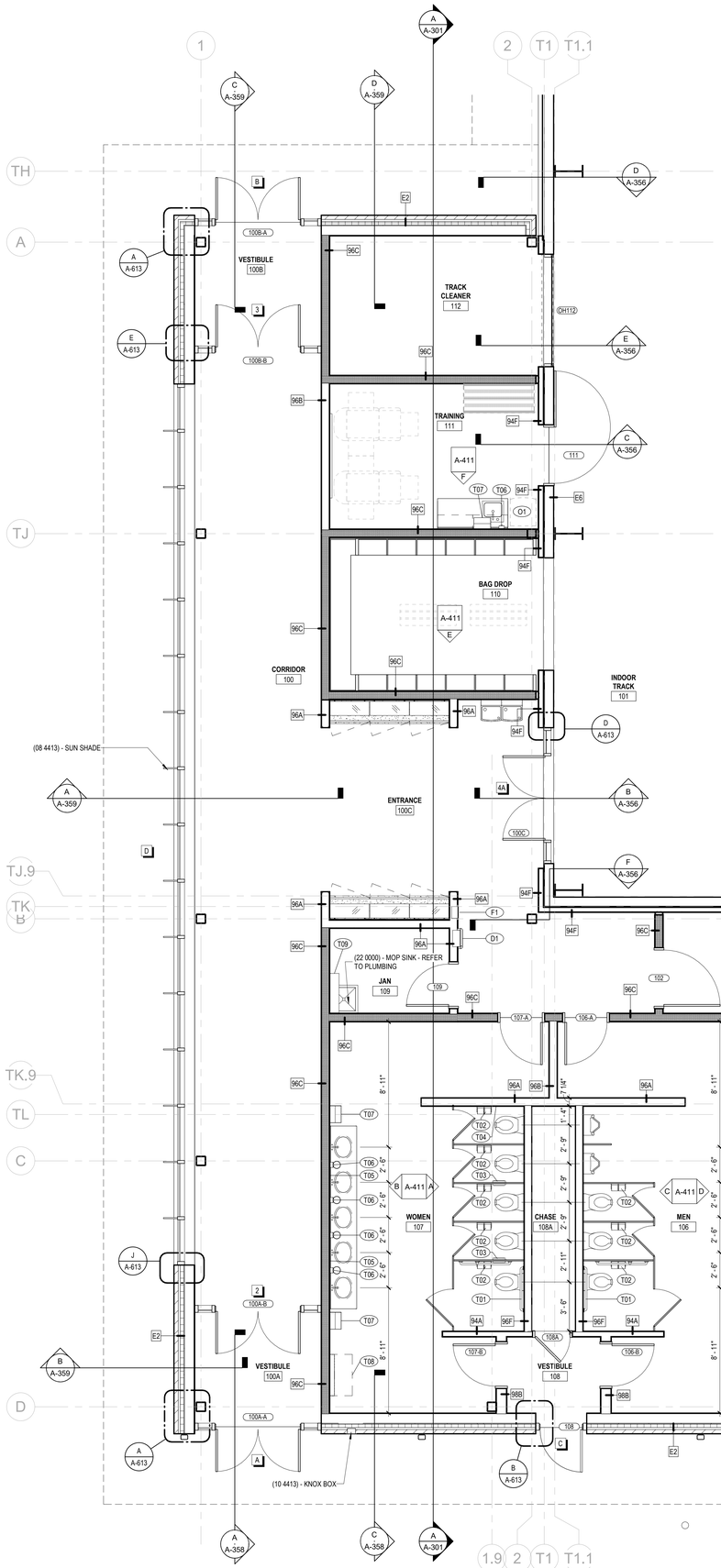

A ENLARGED FLOOR PLAN
1/4" = 1'-0"

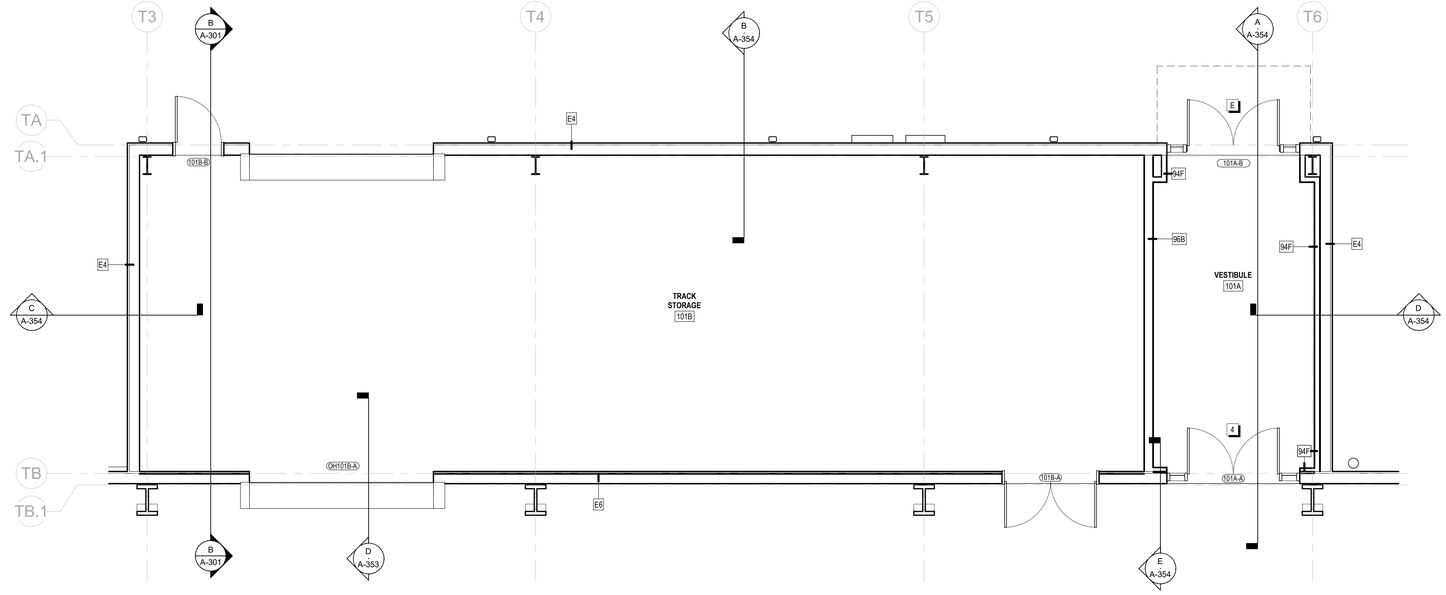

B ENLARGED TRACK STORAGE
1/4" = 1'-0"

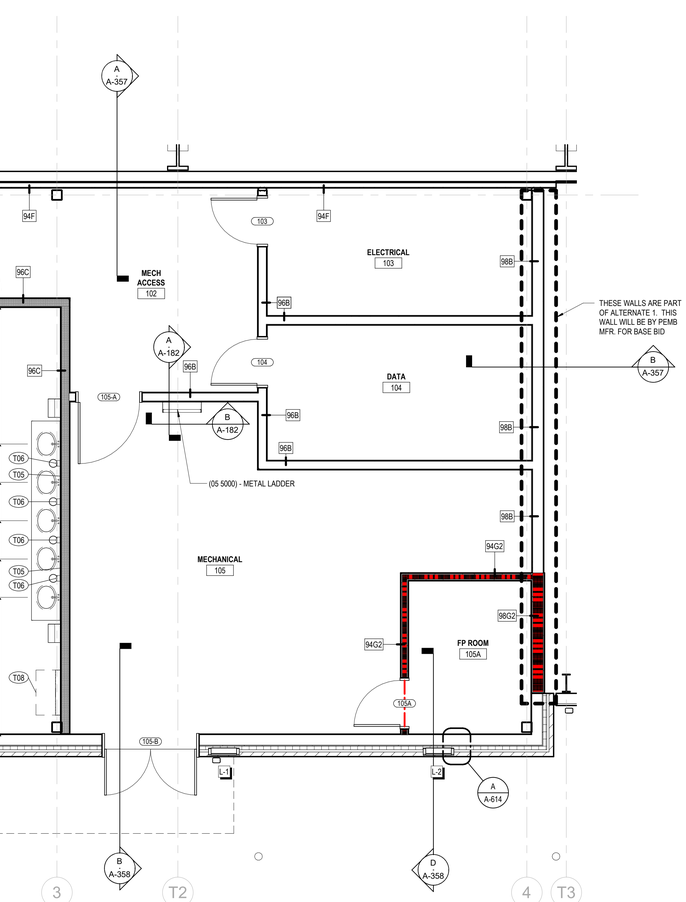

	SPECIALTIES & EQUIPMENT SCHEDULE		
MARK	DESCRIPTION	PROVIDED BY	COMMENTS
10 1100 - VISUAL DISPLAY SURFACES			
MB1	MARKER BOARD	C.F.C.I.	
10 2600 - WALL & DOOR PROTECTION			
W1	CORNER GUARD	C.F.C.I.	
10 2800 - TOILET ACCESSORY			
T01	GRAB BAR SET. 36" BACK, 42" SIDE, 18" VERTICAL	C.F.C.I.	
T02	TOILET PAPER DISPENSER - DOUBLE ROLL	O.F.C.I.	
T03	SANITARY NAPKIN DISPOSAL - PARTITION MOUNTED	C.F.C.I.	
T04	SANITARY NAPKIN DISPOSAL - RECESSED	C.F.C.I.	
T05	FRAMELESS MIRROR	C.F.C.I.	
T06	SOAP DISPENSER - SURFACE MOUNTED, VERTICAL	O.F.C.I.	
T07	PAPER TOWEL DISPENSER	O.F.C.I.	
T08	BABY CHANGING STATION	C.F.C.I.	
T09	UTILITY SHELF WITH MOP AND BROOM HOLDER	C.F.C.I.	
10 4313 - LIFE SAFETY CABINETS			
D1	DEFIBRILLATOR CABINET		
10 4413 - FIRE EQUIPMENT			
F1	SEMI-RECESSED FIRE EXTINGUISHER CABINET	C.F.C.I.	
F5	KNOX BOX	C.F.C.I.	
EQUIPMENT			
O1	ICE MACHINE	O.F.O.I.	

JRA architects
3225 Summit Square Place, Suite 200
Lexington, Kentucky 40509
859.252.6781

NOT FOR CONSTRUCTION

RESERVED FOR AHJ STAMP

RFP 2 DRAWINGS

UK INDOOR TRACK FACILITY
UNIVERSITY OF KENTUCKY
700 SPORTS CENTER DRIVE LEXINGTON, KENTUCKY 40506

ARCHITECTURAL

PROJECT	202258
DATE	08/31/2022

REVISIONS

No.	Description	Date

JRA ARCHITECTS HAS RETAINED AN ELECTRONIC VERSION OF THESE DRAWINGS. THE CLIENT AGREES NOT TO REUSE THESE DRAWINGS - IN ELECTRONIC OR ANY OTHER FORMAT - IN WHOLE, OR IN PART, FOR ANY PURPOSE OTHER THAN FOR THE PROJECT. THE CLIENT AGREES NOT TO TRANSFER THESE ELECTRONIC FILES TO OTHERS WITHOUT THE PRIOR WRITTEN CONSENT OF THE ARCHITECT. THE CLIENT FURTHER AGREES TO WAIVE ALL CLAIMS AGAINST THE ARCHITECT RESULTING IN ANY WAY FROM ANY UNAUTHORIZED CHANGES TO OR REUSE OF THE ELECTRONIC FILES FOR ANY OTHER PROJECT BY ANYONE OTHER THAN THE ARCHITECT.

ENLARGED FLOOR PLANS

A-401

COPYRIGHT 2022 - JRA, INC.

C:\Users\lburnett\OneDrive - JRA Architects\Documents\202258 - UK Indoor Track_lburnettNA4L5.rvt
9/2/2022 3:24:03 PM

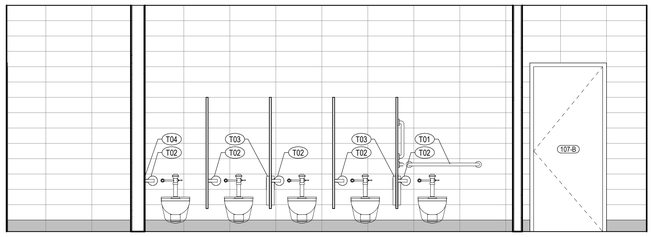

A INTERIOR ELEVATION - WOMENS 107
3/8" = 1'-0"

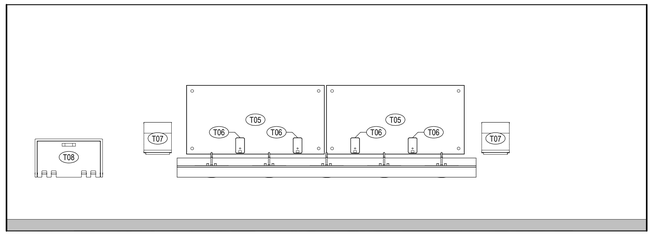

B INTERIOR ELEVATION - WOMENS 107
3/8" = 1'-0"

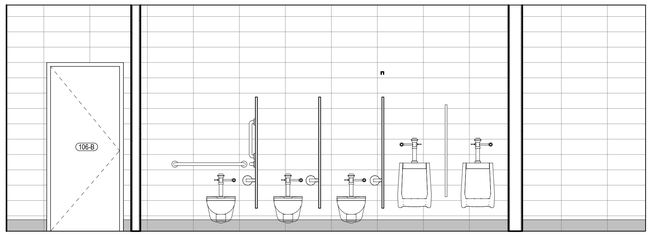

C INTERIOR ELEVATION - MENS 106
3/8" = 1'-0"

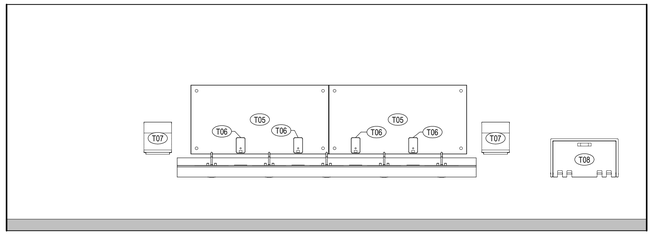

D INTERIOR ELEVATION - MENS 106
3/8" = 1'-0"

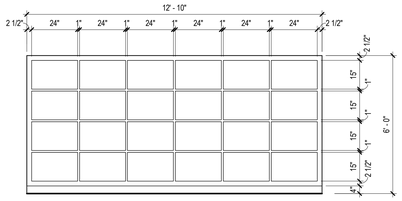

E INTERIOR ELEVATION - BAG DROP
3/8" = 1'-0"

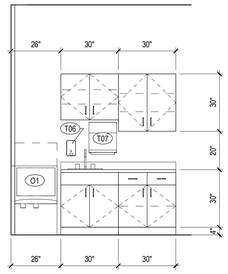

F INTERIOR ELEVATION - TRAINING
3/8" = 1'-0"

SPECIALTIES & EQUIPMENT SCHEDULE

MARK	DESCRIPTION	PROVIDED BY	COMMENTS
10 1100 - VISUAL DISPLAY SURFACES			
MB1	MARKER BOARD	C.F.C.I.	
10 2600 - WALL & DOOR PROTECTION			
W1	CORNER GUARD	C.F.C.I.	
10 2800 - TOILET ACCESSORY			
T01	GRAB BAR SET: 36" BACK, 42" SIDE, 18" VERTICAL	C.F.C.I.	
T02	TOILET PAPER DISPENSER - DOUBLE ROLL	O.F.C.I.	
T03	SANITARY NAPKIN DISPOSAL - PARTITION MOUNTED	C.F.C.I.	
T04	SANITARY NAPKIN DISPOSAL - RECESSED	C.F.C.I.	
T05	FRAMELESS MIRROR	C.F.C.I.	
T06	SOAP DISPENSER - SURFACE MOUNTED, VERTICAL	O.F.C.I.	
T07	PAPER TOWEL DISPENSER	O.F.C.I.	
T08	BABY CHANGING STATION	C.F.C.I.	
T09	UTILITY SHELF WITH MOP AND BROOM HOLDER	C.F.C.I.	
10 4313 - LIFE SAFETY CABINETS			
D1	DEFIBRILLATOR CABINET		
10 4413 - FIRE EQUIPMENT			
F1	SEMI-RECESSED FIRE EXTINGUISHER CABINET	C.F.C.I.	
F5	KNOX BOX	C.F.C.I.	
EQUIPMENT			
O1	ICE MACHINE	O.F.O.I.	

JRA architects
3225 Summit Square Place, Suite 200
Lexington, Kentucky 40509
859.252.6781

NOT FOR CONSTRUCTION

RESERVED FOR AHJ STAMP

RFP 2 DRAWINGS

UK INDOOR TRACK FACILITY
UNIVERSITY OF KENTUCKY
700 SPORTS CENTER DRIVE LEXINGTON, KENTUCKY 40506

ARCHITECTURAL

PROJECT	202258
DATE	08/31/2022

REVISIONS

No.	Description	Date

JRA ARCHITECTS HAS RETAINED AN ELECTRONIC VERSION OF THESE DRAWINGS. THE CLIENT AGREES NOT TO REUSE THESE DRAWINGS - IN ELECTRONIC OR ANY OTHER FORMAT - IN WHOLE, OR IN PART, FOR ANY PURPOSE OTHER THAN FOR THE PROJECT. THE CLIENT AGREES NOT TO TRANSFER THESE ELECTRONIC FILES TO OTHERS WITHOUT THE PRIOR WRITTEN CONSENT OF THE ARCHITECT. THE CLIENT FURTHER AGREES TO WAIVE ALL CLAIMS AGAINST THE ARCHITECT RESULTING IN ANY WAY FROM ANY UNAUTHORIZED CHANGES TO OR REUSE OF THE ELECTRONIC FILES FOR ANY OTHER PROJECT BY ANYONE OTHER THAN THE ARCHITECT.

INTERIOR ELEVATIONS

A-411

COPYRIGHT 2022 - JRA, INC.

C:\Users\lburnett\OneDrive - JRA Architects\Documents\202258 - UK Indoor Track_lburnettNA4L5.rvt
9/2/2022 3:24:07 PM

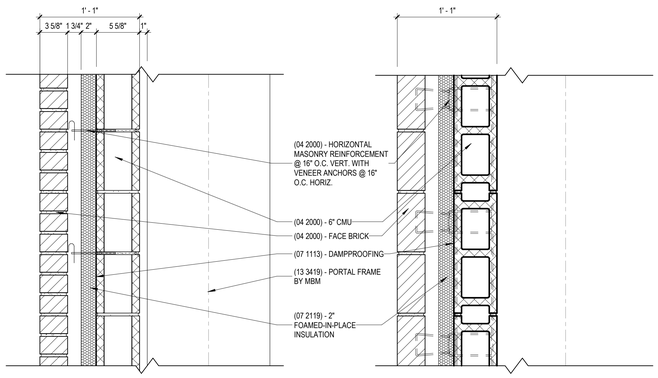

BID ALTERNATE #4 - BRICK WATER TABLE AND CMU WILL NOT OCCUR IF ALTERNATE IS NOT TAKEN

SECTION PLAN

E1 - EXTERIOR WALL TYPE
1 1/2" = 1'-0"

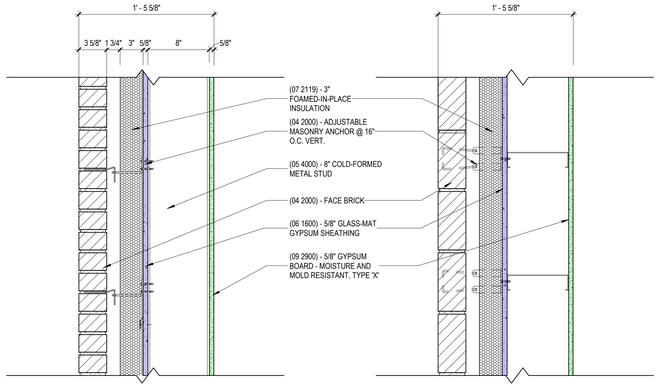

SECTION PLAN

E2 - EXTERIOR WALL TYPE
1 1/2" = 1'-0"

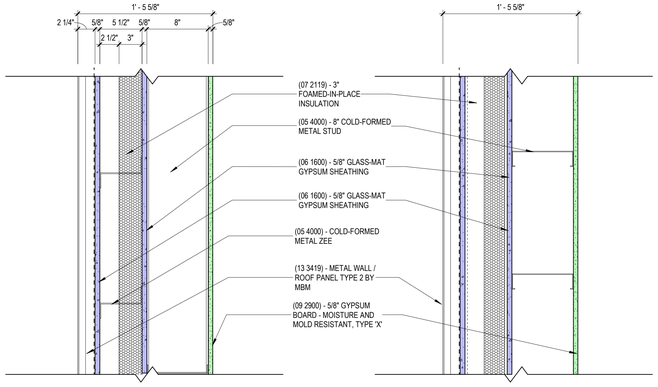

SECTION PLAN

E3 - EXTERIOR WALL TYPE
1 1/2" = 1'-0"

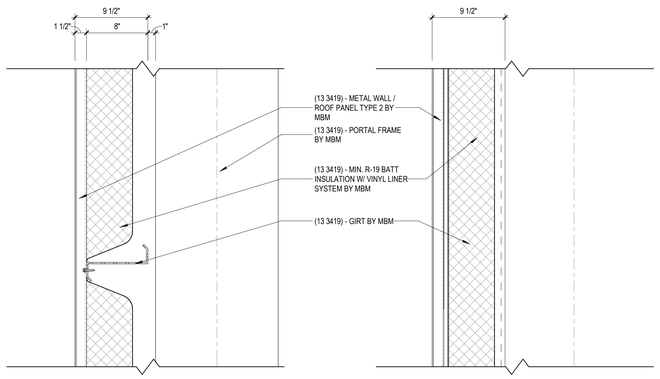

SECTION PLAN

E4 - EXTERIOR WALL TYPE (METAL BUILDING)
1 1/2" = 1'-0" NOTE: GIRT SPACING AND LOCATIONS BY MBM. COORDINATE OPENING LOCATIONS AS REQUIRED.

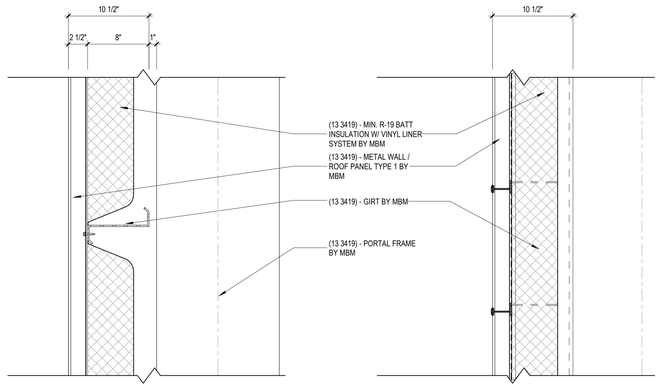

SECTION PLAN

E5 - EXTERIOR WALL TYPE (METAL BUILDING)
1 1/2" = 1'-0" NOTE: GIRT SPACING AND LOCATIONS BY MBM. COORDINATE OPENING LOCATIONS AS REQUIRED.

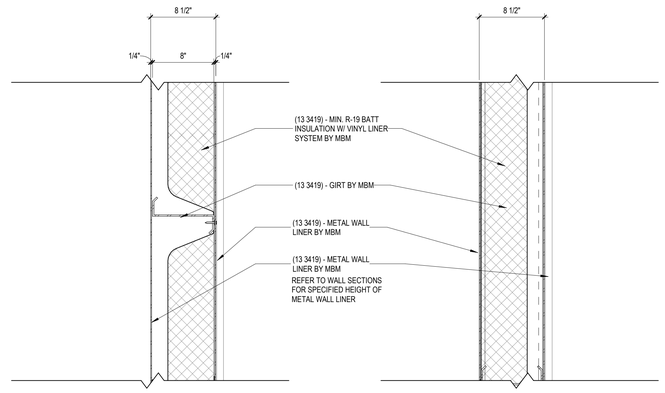

SECTION PLAN

E6 -EXTERIOR WALL TYPE (METAL BUILDING TRANSITION)
1 1/2" = 1'-0" NOTE: GIRT SPACING AND LOCATIONS BY MBM. COORDINATE OPENING LOCATIONS AS REQUIRED.

JRA architects
3225 Summit Square Place, Suite 200
Lexington, Kentucky 40509
859.252.6781

NOT FOR CONSTRUCTION

RESERVED FOR AHJ STAMP

RFP 2 DRAWINGS

UK INDOOR TRACK FACILITY
UNIVERSITY OF KENTUCKY
700 SPORTS CENTER DRIVE LEXINGTON, KENTUCKY 40506

ARCHITECTURAL

PROJECT	202258
DATE	08/31/2022

REVISIONS

No.	Description	Date

JRA ARCHITECTS HAS RETAINED AN ELECTRONIC VERSION OF THESE DRAWINGS. THE CLIENT AGREES NOT TO REUSE THESE DRAWINGS - IN ELECTRONIC OR ANY OTHER FORMAT - IN WHOLE, OR IN PART, FOR ANY PURPOSE OTHER THAN FOR THE PROJECT. THE CLIENT AGREES NOT TO TRANSFER THESE ELECTRONIC FILES TO OTHERS WITHOUT THE PRIOR WRITTEN CONSENT OF THE ARCHITECT. THE CLIENT FURTHER AGREES TO WAIVE ALL CLAIMS AGAINST THE ARCHITECT RESULTING IN ANY WAY FROM ANY UNAUTHORIZED CHANGES TO OR REUSE OF THE ELECTRONIC FILES FOR ANY OTHER PROJECT BY ANYONE OTHER THAN THE ARCHITECT.

EXTERIOR ASSEMBLIES

A-501

COPYRIGHT 2022 - JRA, INC.

C:\Users\lburnett\OneDrive - JRA Architects\Documents\202258 - UK Indoor Track_lburnettNA4L5.rvt
9/2/2022 3:24:08 PM

C:\Users\lburnett\OneDrive - JRA Architects\Documents\202258 - UK Indoor Track_lburnettNAL5.rvt

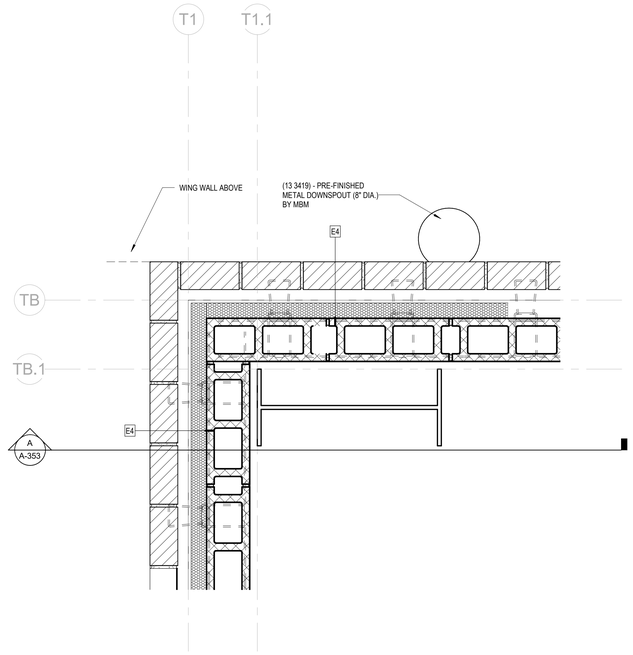

A PLAN DETAIL LOW - BRICK WAINSCOT
1 1/2" = 1'-0"

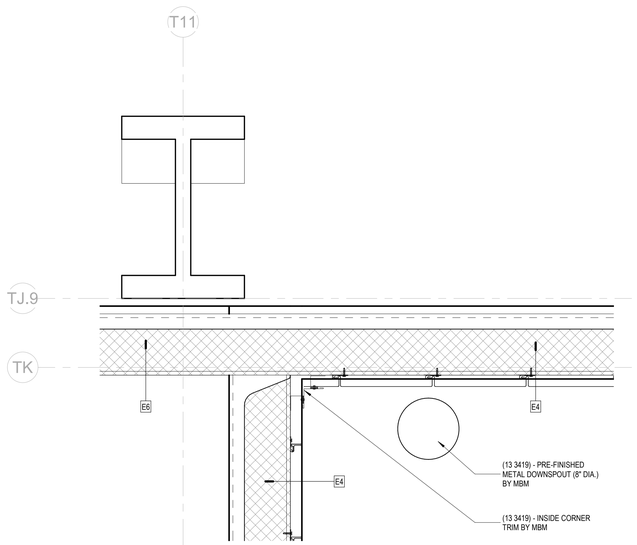

B PLAN DETAIL LOW - AIR HANDLER
1 1/2" = 1'-0"

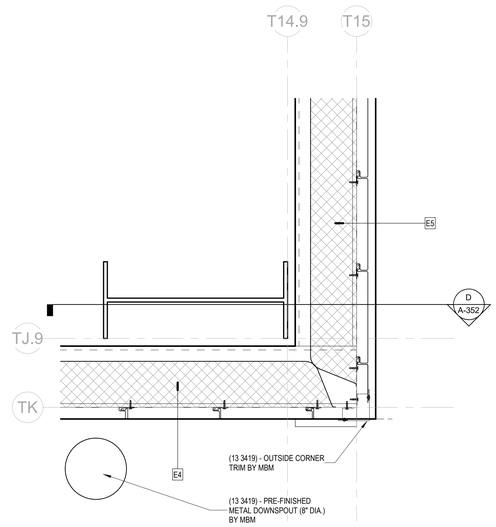

C PLAN DETAIL LOW - PEMB CORNER
1 1/2" = 1'-0"

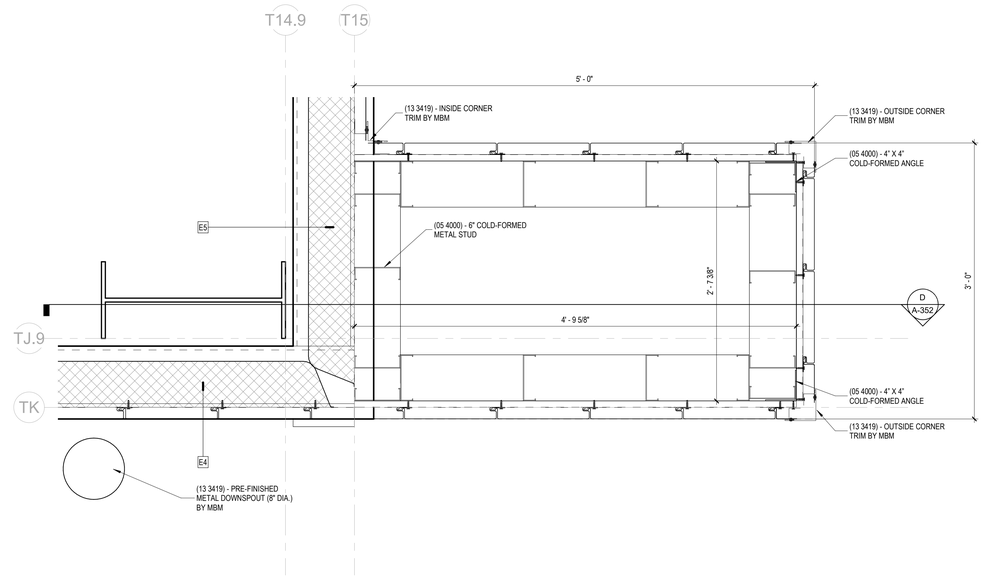

D PLAN DETAIL HIGH - PEMB RAKE WING
1 1/2" = 1'-0"

JRA architects
3225 Summit Square Place, Suite 200
Lexington, Kentucky 40509
859.252.6781

NOT FOR CONSTRUCTION

RESERVED FOR AHJ STAMP

RFP 2 DRAWINGS

UK INDOOR TRACK FACILITY
UNIVERSITY OF KENTUCKY
700 SPORTS CENTER DRIVE LEXINGTON, KENTUCKY 40506

ARCHITECTURAL

PROJECT	202258
DATE	08/31/2022

REVISIONS

No.	Description	Date

JRA ARCHITECTS HAS RETAINED AN ELECTRONIC VERSION OF THESE DRAWINGS. THE CLIENT AGREES NOT TO REUSE THESE DRAWINGS - IN ELECTRONIC OR ANY OTHER FORMAT - IN WHOLE, OR IN PART, FOR ANY PURPOSE OTHER THAN FOR THE PROJECT. THE CLIENT AGREES NOT TO TRANSFER THESE ELECTRONIC FILES TO OTHERS WITHOUT THE PRIOR WRITTEN CONSENT OF THE ARCHITECT. THE CLIENT FURTHER AGREES TO WAIVE ALL CLAIMS AGAINST THE ARCHITECT RESULTING IN ANY WAY FROM ANY CHANGES OR ADDITIONS TO OR REUSE OF THE ELECTRONIC FILES FOR ANY OTHER PROJECT BY ANYONE OTHER THAN THE ARCHITECT.

PLAN DETAILS

A-511

COPYRIGHT 2022 - JRA, INC.

9/2/2022 3:24:09 PM

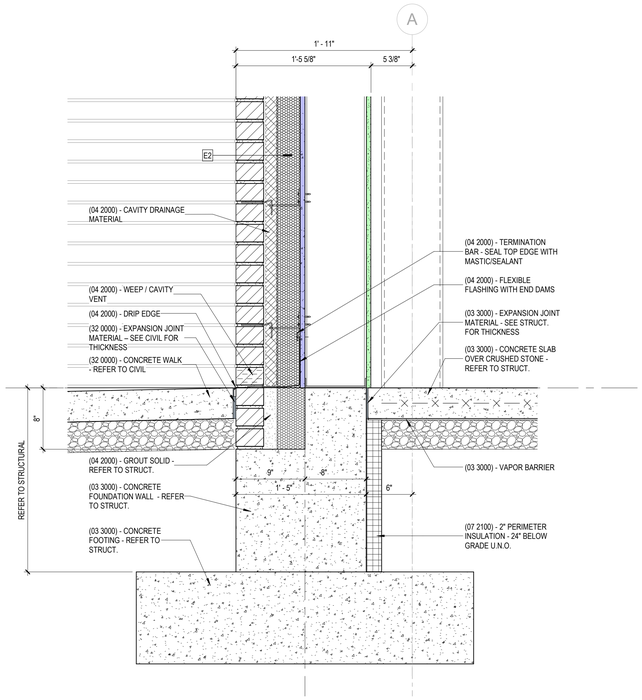

A FOUNDATION DETAIL - BRICK
1 1/2" = 1'-0"

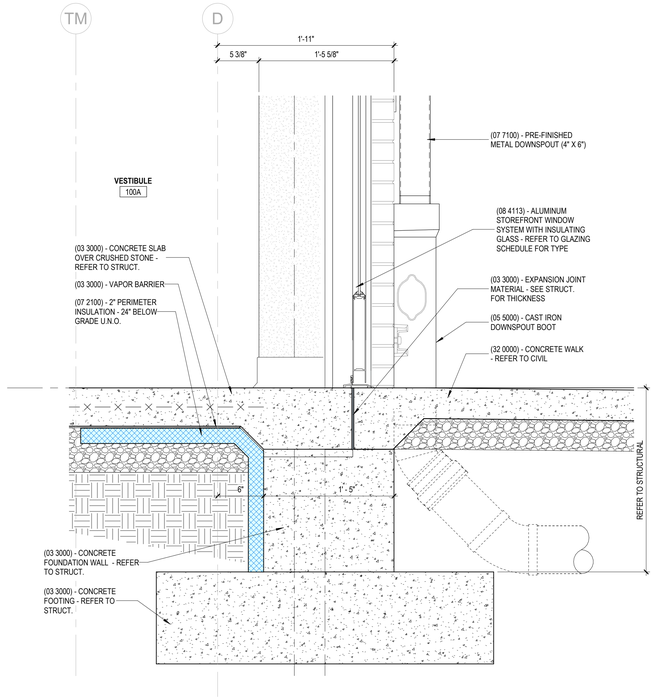

B FOUNDATION DETAIL - DOOR
1 1/2" = 1'-0"

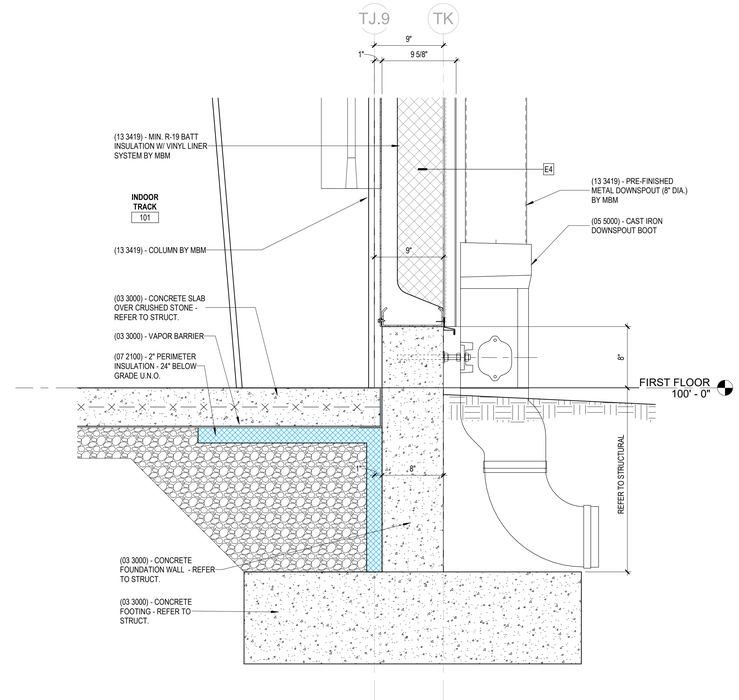

C FOUNDATION DETAIL - PEMB
1 1/2" = 1'-0"

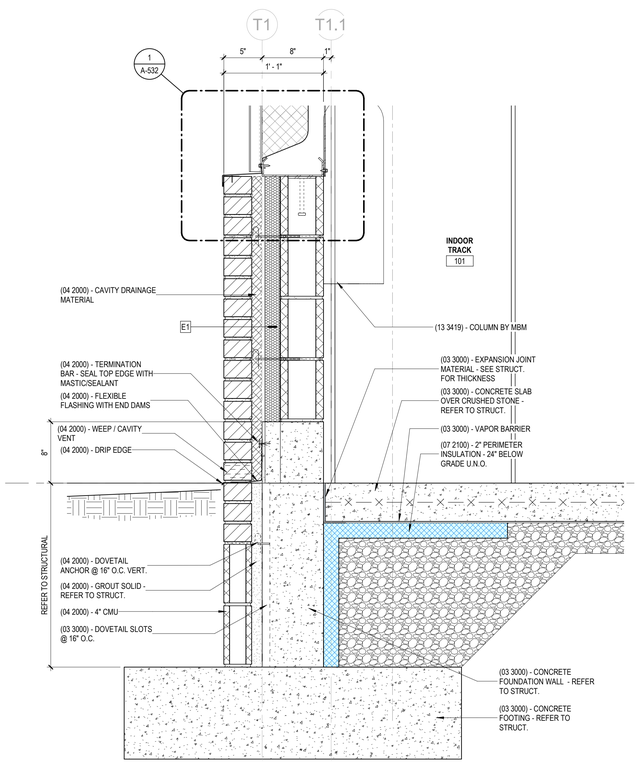

D FOUNDATION DETAIL - ALTERNATE NO. 3
1 1/2" = 1'-0"

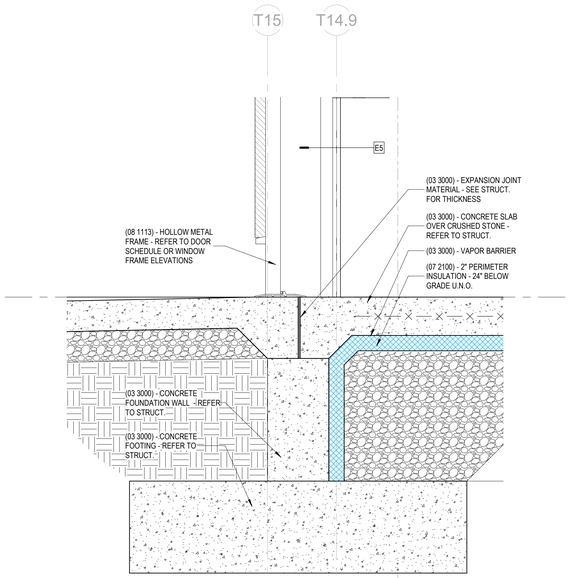

E FOUNDATION DETAIL - PEMB DOOR
1 1/2" = 1'-0"

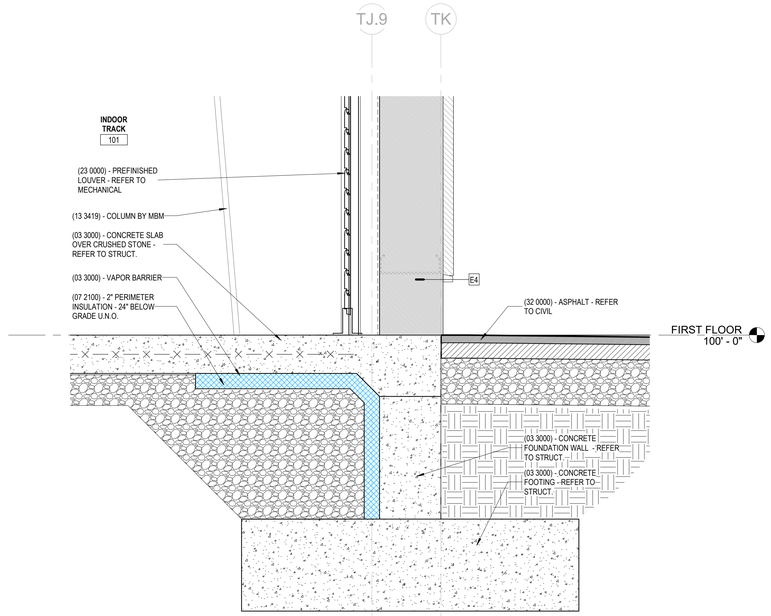

F FOUNDATION DETAIL - OH DOOR
1 1/2" = 1'-0"

JRA architects
3225 Summit Square Place, Suite 200
Lexington, Kentucky 40509
859.252.6781

NOT FOR CONSTRUCTION

RESERVED FOR AHJ STAMP

RFP 2 DRAWINGS

UK INDOOR TRACK FACILITY
UNIVERSITY OF KENTUCKY
700 SPORTS CENTER DRIVE LEXINGTON, KENTUCKY 40506

ARCHITECTURAL

PROJECT	202258
DATE	8/31/2022

REVISIONS

No.	Description	Date

JRA ARCHITECTS HAS RETAINED AN ELECTRONIC VERSION OF THESE DRAWINGS. THE CLIENT AGREES NOT TO REUSE THESE DRAWINGS - IN ELECTRONIC OR ANY OTHER FORMAT - IN WHOLE, OR IN PART, FOR ANY PURPOSE OTHER THAN FOR THIS PROJECT. THE CLIENT AGREES NOT TO TRANSFER THESE ELECTRONIC FILES TO OTHERS WITHOUT THE PRIOR WRITTEN CONSENT OF THE ARCHITECT. THE CLIENT FURTHER AGREES TO WAIVE ALL CLAIMS AGAINST THE ARCHITECT RESULTING IN ANY WAY FROM ANY UNAUTHORIZED CHANGES TO OR REUSE OF THE ELECTRONIC FILES FOR ANY OTHER PROJECT BY ANYONE OTHER THAN THE ARCHITECT.

FOUNDATION DETAILS

A-521

COPYRIGHT 2022 - JRA, INC.

C:\Users\jburnett\OneDrive - JRA Architects\Documents\202258 - UK Indoor Track_jburnettNA\L5.rvt
9/7/2022 3:06:15 PM

C:\Users\lburnett\OneDrive - JRA Architects\Documents\202258 - UK Indoor Track_lburnettNAL5.rvt

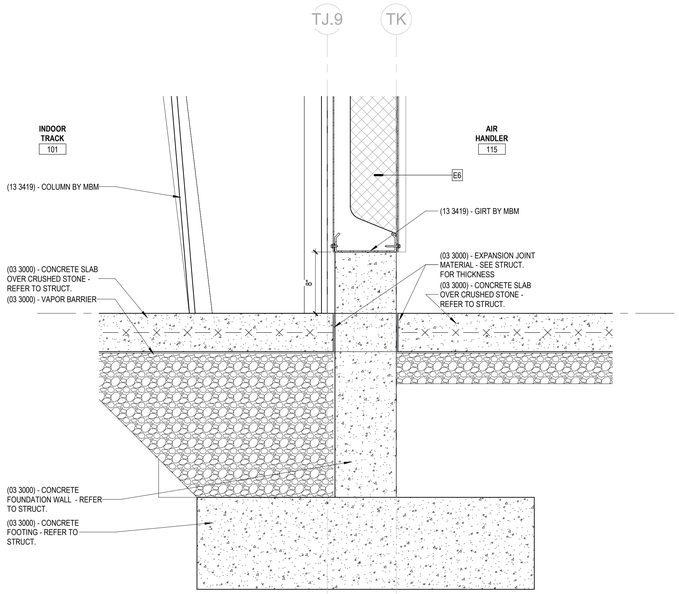

A FOUNDATION DETAIL - PEMB INTERIOR
1 1/2" = 1'-0"

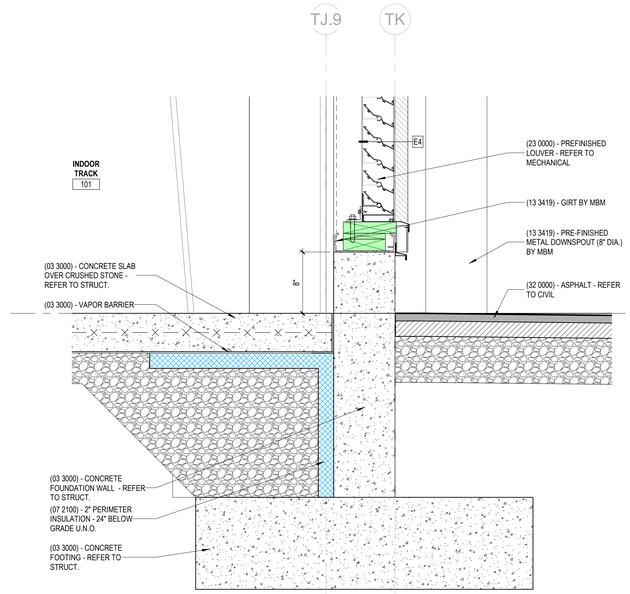

B FOUNDATION DETAIL - LOUVER (LOW)
1 1/2" = 1'-0"

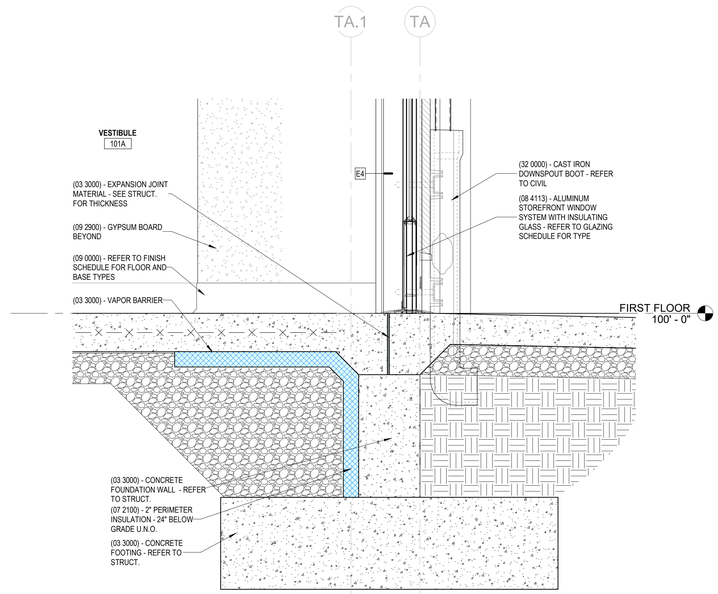

C FOUNDATION DETAIL - STOREFRONT DOOR
1 1/2" = 1'-0"

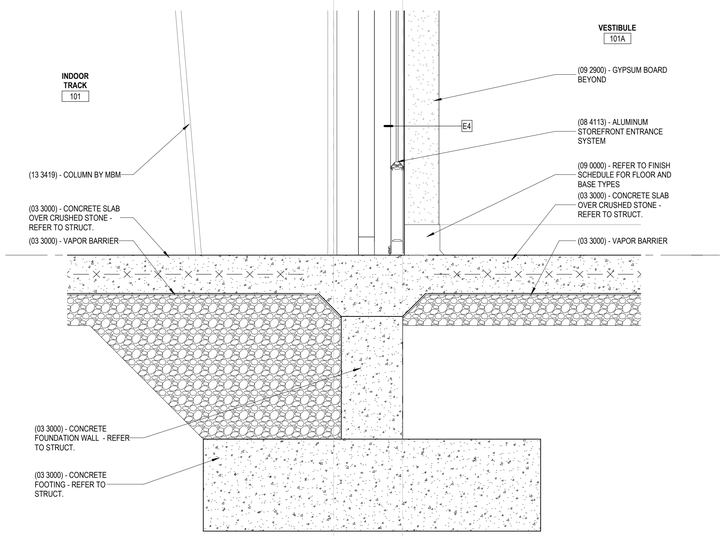

D FOUNDATION DETAIL - STOREFRONT DOOR (INTERIOR)
1 1/2" = 1'-0"

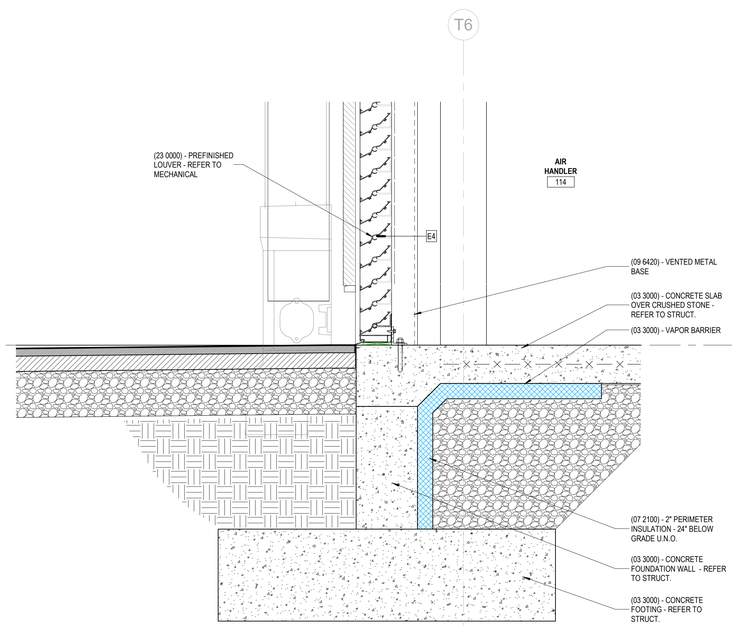

E FOUNDATION DETAIL - REMOVEABLE LOUVER
1 1/2" = 1'-0"

JRA architects
3225 Summit Square Place, Suite 200
Lexington, Kentucky 40509
859.252.6781

NOT FOR CONSTRUCTION

RESERVED FOR AHJ STAMP

RFP 2 DRAWINGS

UK INDOOR TRACK FACILITY
UNIVERSITY OF KENTUCKY
700 SPORTS CENTER DRIVE LEXINGTON, KENTUCKY 40506

ARCHITECTURAL

PROJECT	202258
DATE	08/31/2022

REVISIONS

No.	Description	Date

JRA ARCHITECTS HAS RETAINED AN ELECTRONIC VERSION OF THESE DRAWINGS. THE CLIENT AGREES NOT TO REUSE THESE DRAWINGS - IN ELECTRONIC OR ANY OTHER FORMAT - IN WHOLE, OR IN PART, FOR ANY PURPOSE OTHER THAN FOR THE PROJECT. THE CLIENT AGREES NOT TO TRANSFER THESE ELECTRONIC FILES TO OTHERS WITHOUT THE PRIOR WRITTEN CONSENT OF THE ARCHITECT. THE CLIENT FURTHER AGREES TO WAIVE ALL CLAIMS AGAINST THE ARCHITECT RESULTING IN ANY WAY FROM ANY CHANGES OR ALTERATIONS TO OR REUSE OF THE ELECTRONIC FILES FOR ANY OTHER PROJECT BY ANYONE OTHER THAN THE ARCHITECT.

FOUNDATION DETAILS

A-522

COPYRIGHT 2022 - JRA, INC.

9/2/2022 3:24:14 PM

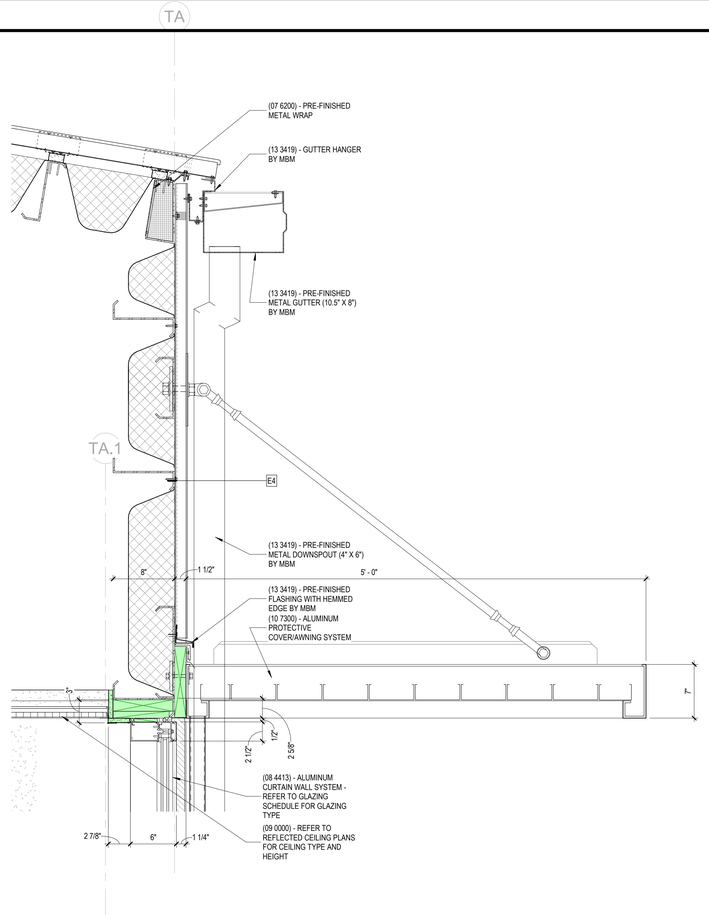

3 **ENLARGED SECTION - CANOPY AT PEMB**
1 1/2" = 1'-0"

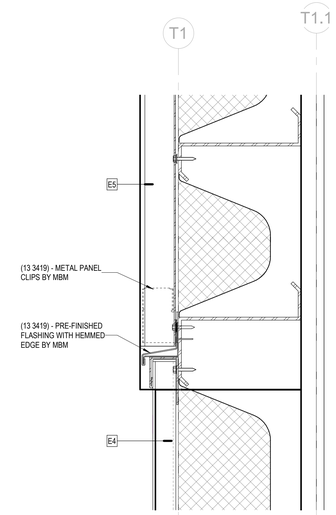

4 **ENLARGED SECTION - PEMB METAL TRANSITION**
3" = 1'-0"

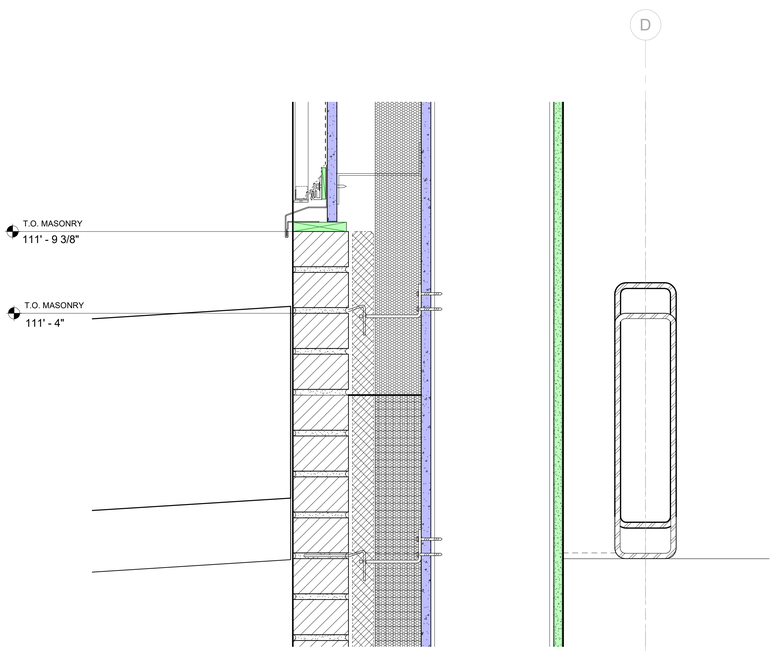

2 **ENLARGED SECTION - BRICK TO METAL PANEL TRANSITION**
3" = 1'-0"

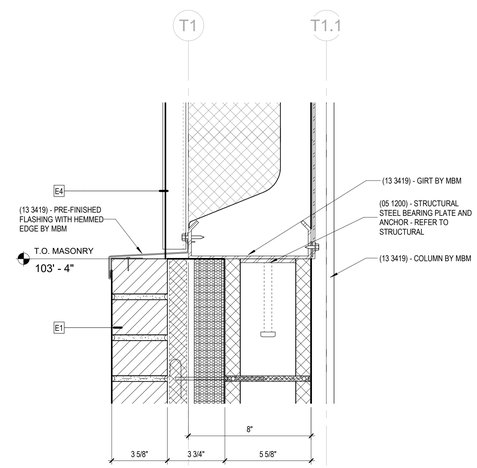

1 **ENLARGED SECTION - BRICK SILL TO METAL**
3" = 1'-0"

JRA architects
3225 Summit Square Place, Suite 200
Lexington, Kentucky 40509
859.252.6781

NOT FOR CONSTRUCTION

RESERVED FOR AHJ STAMP

RFP 2 DRAWINGS

UK INDOOR TRACK FACILITY
UNIVERSITY OF KENTUCKY
700 SPORTS CENTER DRIVE LEXINGTON, KENTUCKY 40506

ARCHITECTURAL

PROJECT	202258
DATE	08/31/2022

REVISIONS

No.	Description	Date

JRA ARCHITECTS HAS RETAINED AN ELECTRONIC VERSION OF THESE DRAWINGS. THE CLIENT AGREES NOT TO REUSE THESE DRAWINGS - IN ELECTRONIC OR ANY OTHER FORMAT - IN WHOLE, OR IN PART, FOR ANY PURPOSE OTHER THAN FOR THE PROJECT. THE CLIENT AGREES NOT TO TRANSFER THESE ELECTRONIC FILES TO OTHERS WITHOUT THE PRIOR WRITTEN CONSENT OF THE ARCHITECT. THE CLIENT AGREES TO HOLD HARMLESS AND INDEMNIFY AGAINST THE ARCHITECT RESULTING IN ANY WAY FROM ANY UNAUTHORIZED CHANGES TO OR REUSE OF THE ELECTRONIC FILES FOR ANY OTHER PROJECT BY ANYONE OTHER THAN THE ARCHITECT.

ENLARGED SECTION DETAILS

A-532

COPYRIGHT 2022 - JRA, INC.

C:\Users\lburnett\OneDrive - JRA Architects\Documents\202258 - UK Indoor Track_lburnettNAL5.rvt

9/2/2022 3:24:16 PM

C:\Users\lburnett\OneDrive - JRA Architects\Documents\202258 - UK Indoor Track_lburnettNAL5.rvt

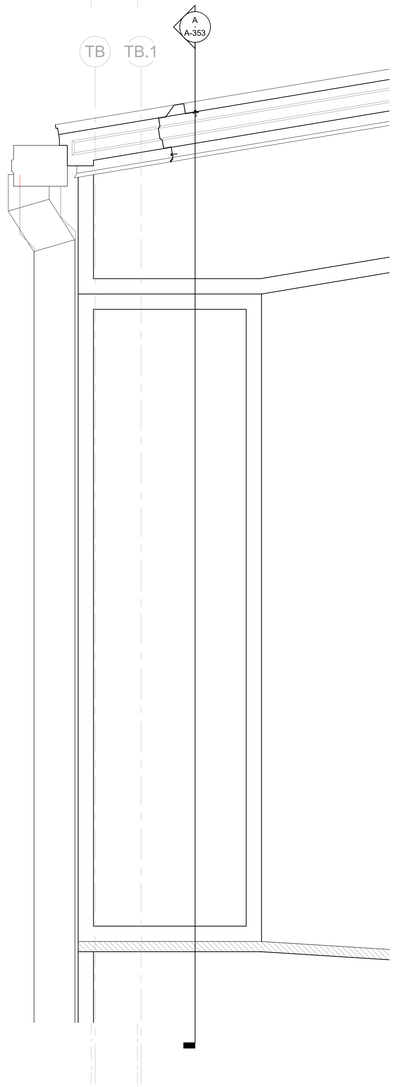

A ENLARGED ELEVATION - WING
1" = 1'-0"

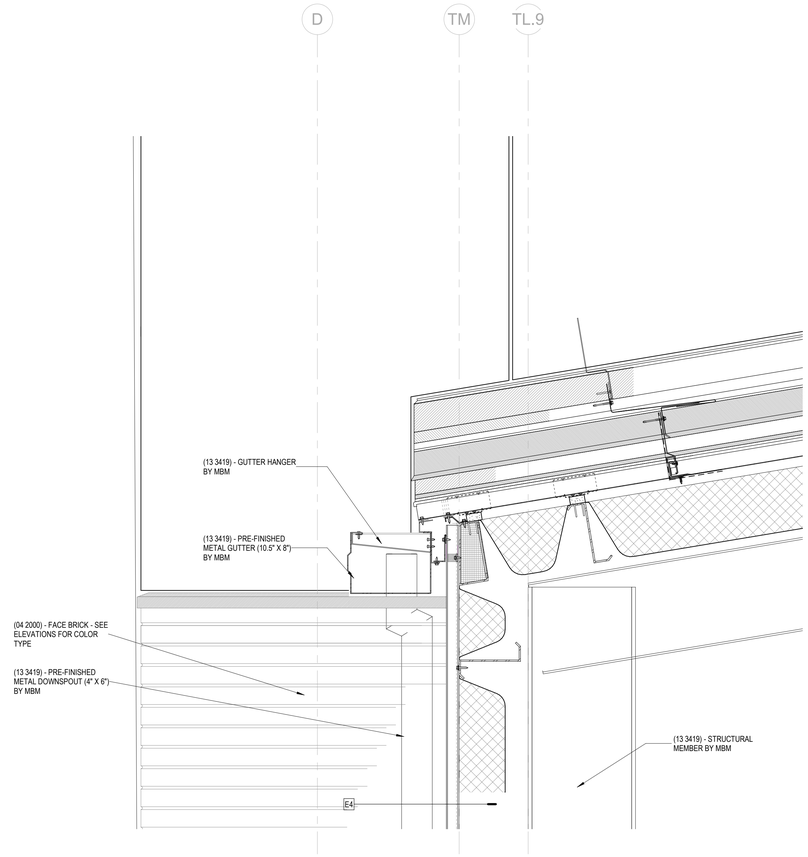

B ENLARGED SECTION - BAND STORAGE GUTTER
1 1/2" = 1'-0"

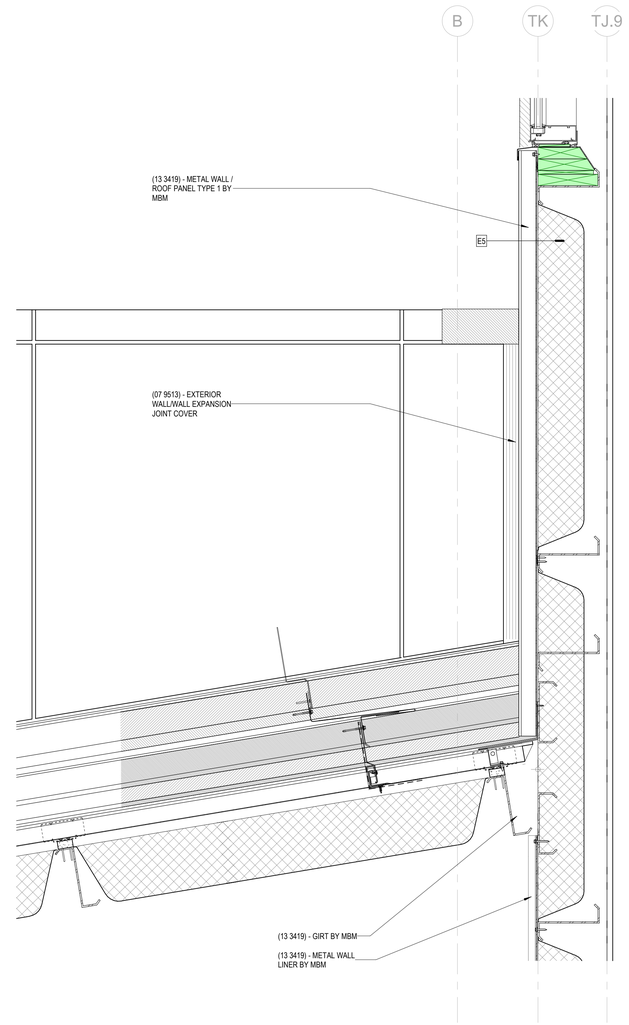

C ENLARGED SECTION - BAND STORAGE ROOF TRANSITION
1 1/2" = 1'-0"

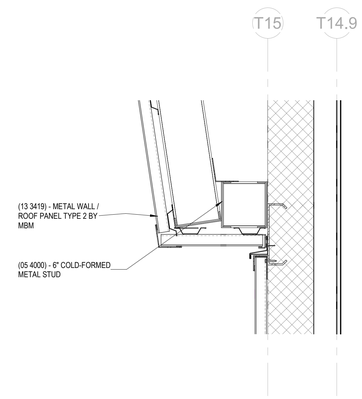

D ENLARGED SECTION - PEMB EAVE ACCENT
1 1/2" = 1'-0"

JRA architects
3225 Summit Square Place, Suite 200
Lexington, Kentucky 40509
859.252.6781

NOT FOR CONSTRUCTION

RESERVED FOR AHJ STAMP

RFP 2 DRAWINGS

UK INDOOR TRACK FACILITY
UNIVERSITY OF KENTUCKY
700 SPORTS CENTER DRIVE LEXINGTON, KENTUCKY 40506

ARCHITECTURAL

PROJECT	202258
DATE	08/31/2022

REVISIONS

No.	Description	Date

JRA ARCHITECTS HAS RETAINED AN ELECTRONIC VERSION OF THESE DRAWINGS. THE CLIENT AGREES NOT TO REUSE THESE DRAWINGS - IN ELECTRONIC OR ANY OTHER FORMAT - IN WHOLE, OR IN PART, FOR ANY PURPOSE OTHER THAN FOR THE PROJECT. THE CLIENT AGREES NOT TO TRANSFER THESE ELECTRONIC FILES TO OTHERS WITHOUT THE PRIOR WRITTEN CONSENT OF THE ARCHITECT. THE CLIENT FURTHER AGREES TO WAIVE ALL CLAIMS AGAINST THE ARCHITECT RESULTING IN ANY WAY FROM ANY CHANGES OR ADDITIONS TO OR REUSE OF THE ELECTRONIC FILES FOR ANY OTHER PROJECT BY ANYONE OTHER THAN THE ARCHITECT.

ENLARGED SECTION DETAILS

A-533

COPYRIGHT 2022 - JRA, INC.

9/2/2022 3:24:17 PM

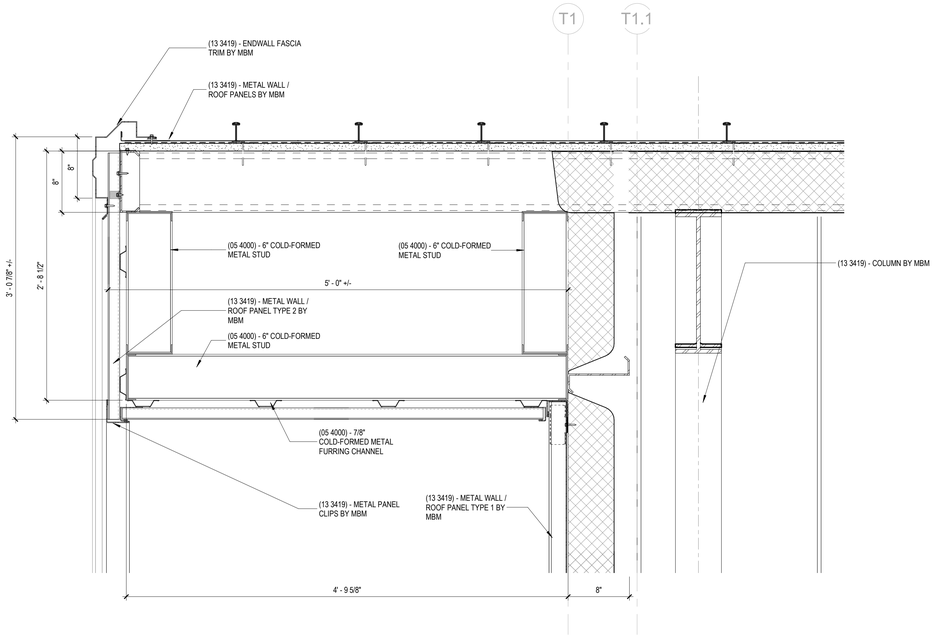

A ROOF DETAIL - PEMB RAKE DETAIL
1 1/2" = 1'-0"

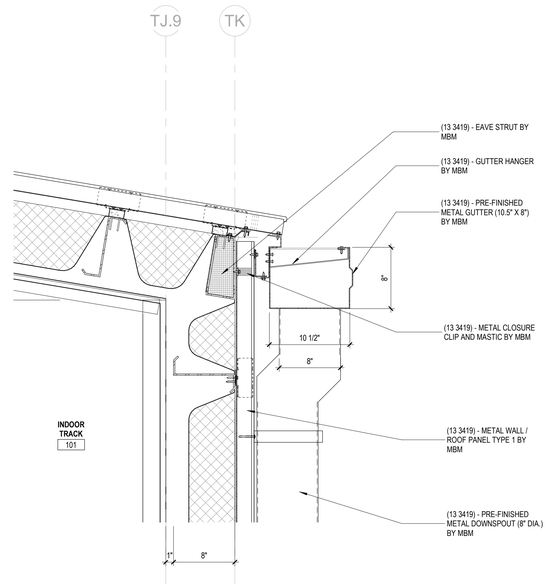

B ROOF DETAIL - PEMB GUTTER DETAIL
1 1/2" = 1'-0"

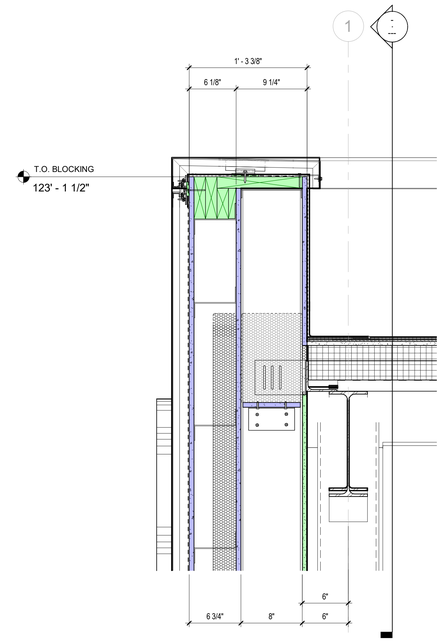

C ROOF DETAIL - ENTRANCE PARAPET (SIDE)
1 1/2" = 1'-0"

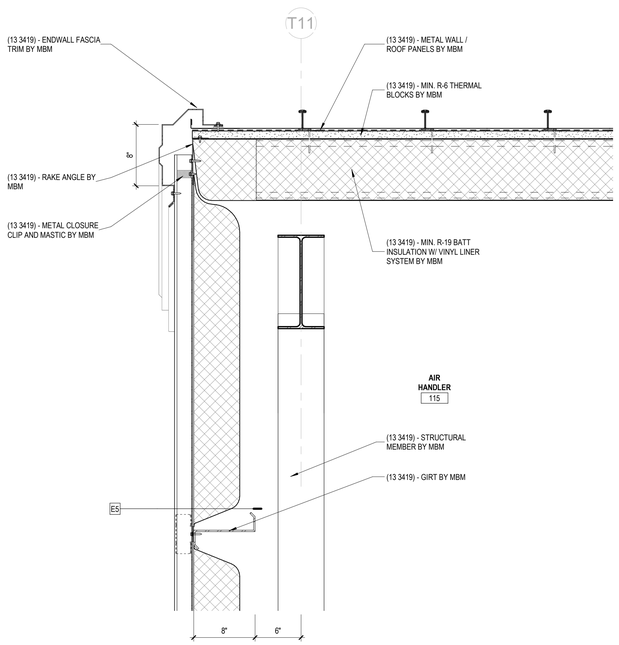

D ROOF DETAIL PEMB RAKE DETAIL (LOW WALL)
1 1/2" = 1'-0"

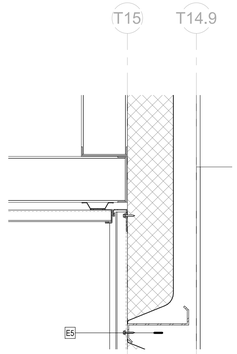

E ROOF DETAIL - PEMB RAKE (METAL)
1 1/2" = 1'-0"

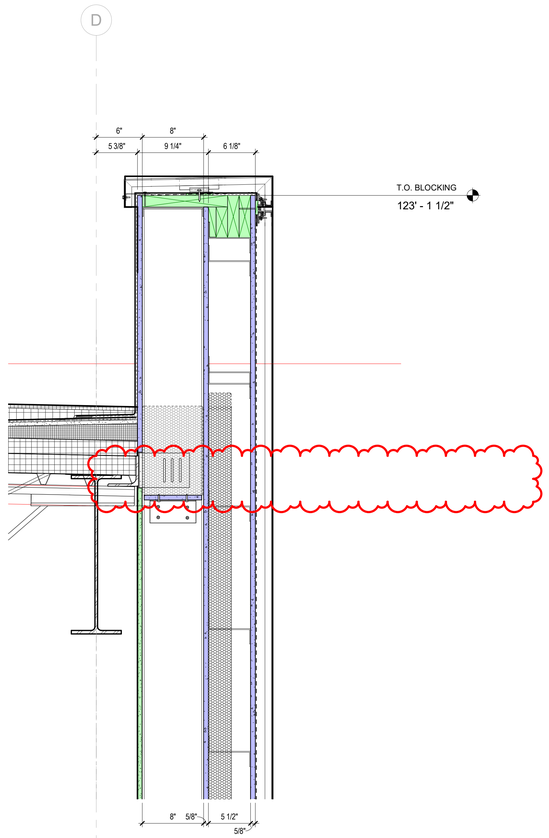

J ROOF DETAIL - ENTRANCE PARAPET
1 1/2" = 1'-0"

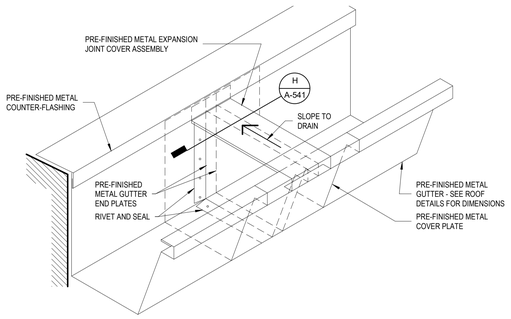

G AXONOMETRIC
3" = 1'-0"

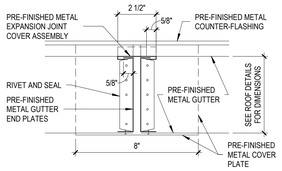

H TYPICAL GUTTER EXPANSION JOINT DETAIL
3" = 1'-0"

JRA architects
3225 Summit Square Place, Suite 200
Lexington, Kentucky 40509
859.252.6781

NOT FOR CONSTRUCTION

RESERVED FOR AHJ STAMP

RFP 2 DRAWINGS

UK INDOOR TRACK FACILITY
UNIVERSITY OF KENTUCKY
700 SPORTS CENTER DRIVE LEXINGTON, KENTUCKY 40506

ARCHITECTURAL

PROJECT	202258
DATE	08/31/2022

REVISIONS

No.	Description	Date
1	Revision 1	Date 1

JRA ARCHITECTS HAS RETAINED AN ELECTRONIC VERSION OF THESE DRAWINGS. THE CLIENT AGREES NOT TO REUSE THESE DRAWINGS - IN ELECTRONIC OR ANY OTHER FORMAT - IN WHOLE, OR IN PART, FOR ANY PURPOSE OTHER THAN FOR THE PROJECT. THE CLIENT AGREES NOT TO TRANSFER THESE ELECTRONIC FILES TO OTHERS WITHOUT THE PRIOR WRITTEN CONSENT OF THE ARCHITECT. THE CLIENT FURTHER AGREES TO WAIVE ALL CLAIMS AGAINST THE ARCHITECT RESULTING IN ANY WAY FROM ANY UNAUTHORIZED CHANGES TO OR REUSE OF THE ELECTRONIC FILES FOR ANY OTHER PROJECT BY ANYONE OTHER THAN THE ARCHITECT.

ENLARGED PARAPET / ROOF DETAILS

A-541

COPYRIGHT 2022 - JRA, INC.

C:\Users\lburnett\OneDrive - JRA Architects\Documents\202258 - UK Indoor Track_lburnettNAL5.rvt

9/2/2022 3:24:20 PM

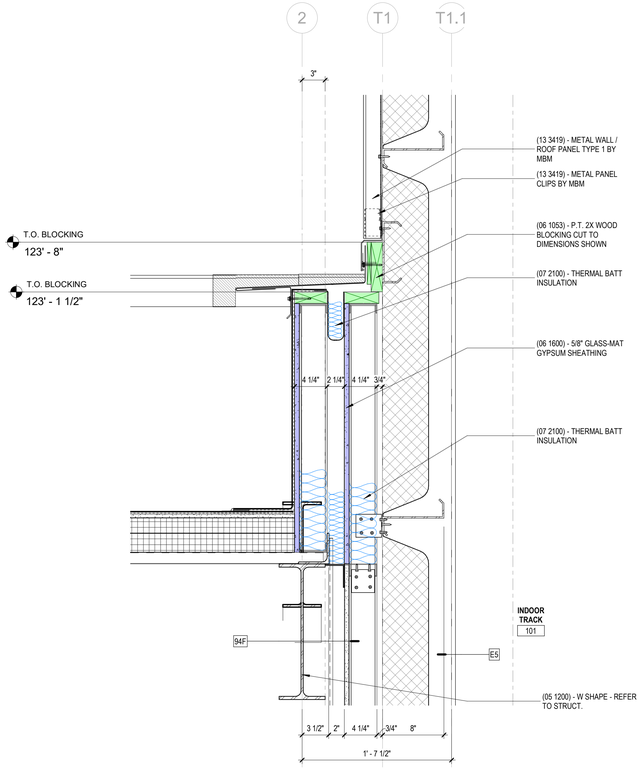

A ROOF DETAIL - EXPANSION JOINT
1 1/2" = 1'-0"

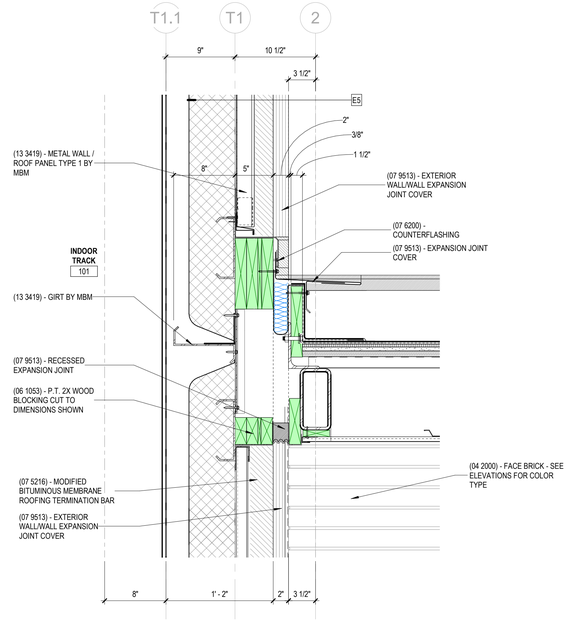

B ROOF DETAIL - CANOPY AT EXPANSION JOINT
1 1/2" = 1'-0"

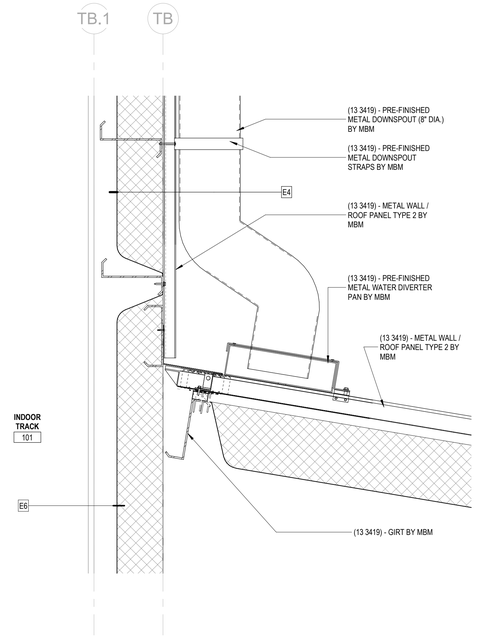

C ROOF DETAIL - PEMB ROOF TRANSITION
1 1/2" = 1'-0"

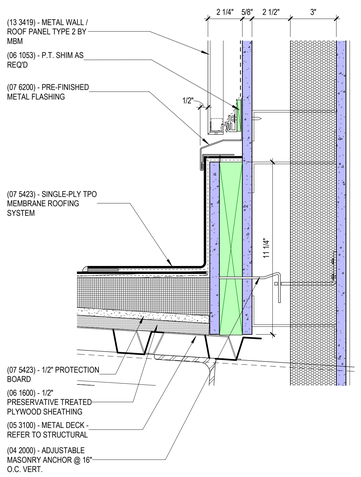

1 Detail 26
3" = 1'-0"

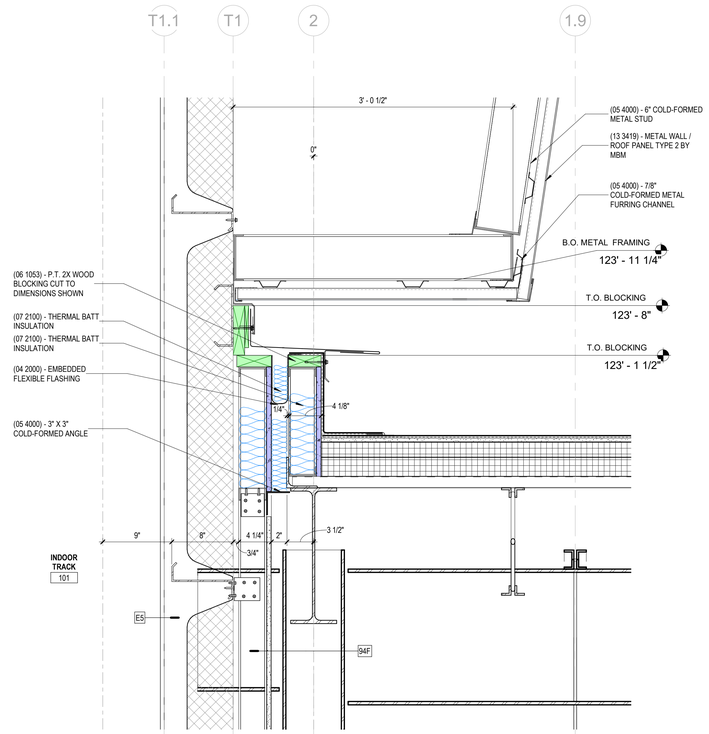

D ROOF DETAIL - EXPANSION JOINT / WING
1 1/2" = 1'-0"

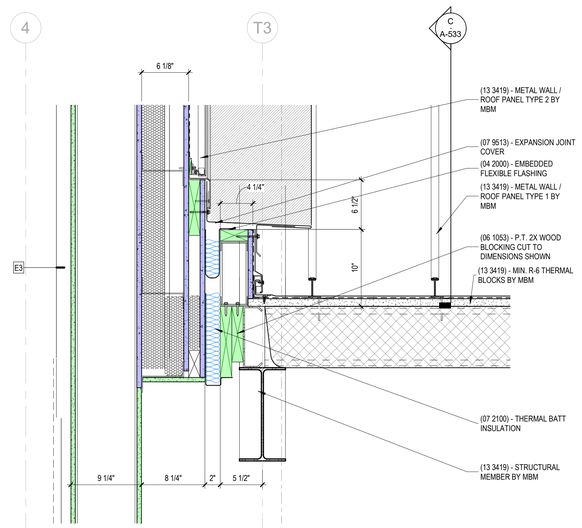

E ROOF DETAIL BAND STORAGE EXPANSION JOINT
1 1/2" = 1'-0"

JRA architects
3225 Summit Square Place, Suite 200
Lexington, Kentucky 40509
859.252.6781

NOT FOR CONSTRUCTION

RESERVED FOR AHJ STAMP

RFP 2 DRAWINGS

UK INDOOR TRACK FACILITY
UNIVERSITY OF KENTUCKY
700 SPORTS CENTER DRIVE LEXINGTON, KENTUCKY 40506

ARCHITECTURAL

PROJECT	202258
DATE	08/31/2022

REVISIONS

No.	Description	Date

JRA ARCHITECTS HAS RETAINED AN ELECTRONIC VERSION OF THESE DRAWINGS. THE CLIENT AGREES NOT TO REUSE THESE DRAWINGS - IN ELECTRONIC OR ANY OTHER FORMAT - IN WHOLE, OR IN PART, FOR ANY PURPOSE OTHER THAN FOR THE PROJECT. THE CLIENT AGREES NOT TO TRANSFER THESE ELECTRONIC FILES TO OTHERS WITHOUT THE PRIOR WRITTEN CONSENT OF THE ARCHITECT. THE CLIENT FURTHER AGREES TO WAIVE ALL CLAIMS AGAINST THE ARCHITECT RESULTING IN ANY WAY FROM CHANGES OR ADDITIONS MADE TO OR REUSE OF THE ELECTRONIC FILES FOR ANY OTHER PROJECT BY ANYONE OTHER THAN THE ARCHITECT.

ENLARGED PARAPET / ROOF DETAILS

A-542

COPYRIGHT 2022 - JRA, INC.

C:\Users\lburnett\OneDrive - JRA Architects\Documents\202258 - UK Indoor Track_lburnettNA4L5.rvt
9/2/2022 3:24:22 PM

C:\Users\lburnett\OneDrive - JRA Architects\Documents\202258 - UK Indoor Track_lburnettNAL5.rvt

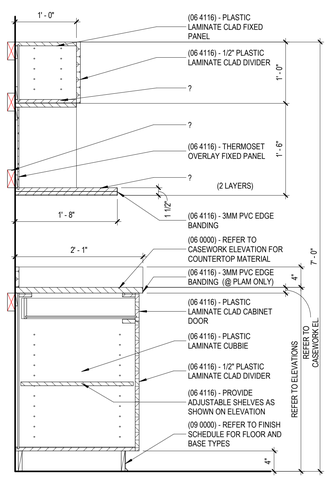

A NON-ADA MICROWAVE CASEWORK SECTION
1" = 1'-0"

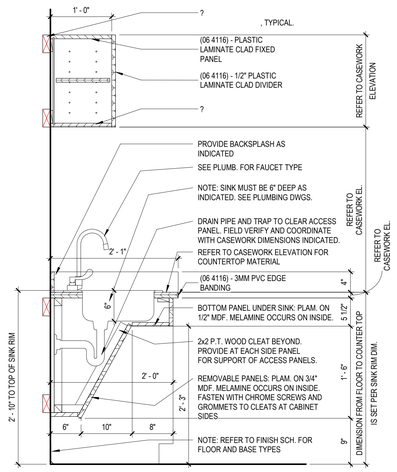

B TYPICAL CASEWORK ACCESSIBLE SINK SECTION
1" = 1'-0"

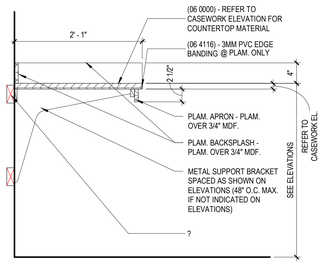

C TYPICAL COUNTERTOP SECTION
1" = 1'-0"

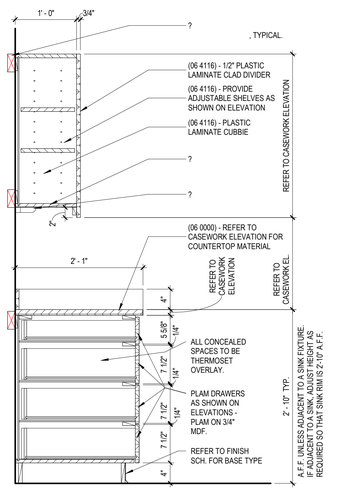

D TYPICAL CASEWORK DRAWER SECTION
1" = 1'-0"

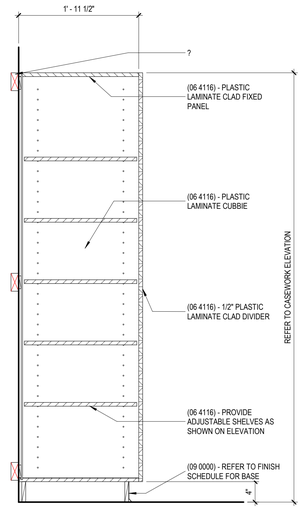

E TYPICAL WARDROBE SECTION
1" = 1'-0"

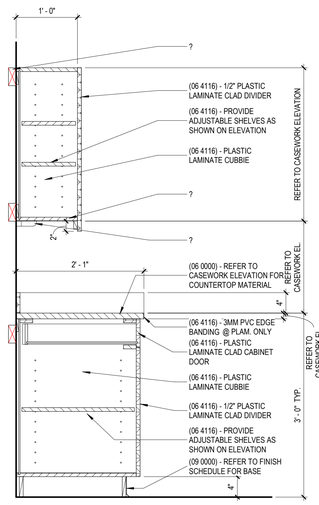

F TYPICAL CASEWORK SECTION
1" = 1'-0"

JRA architects
3225 Summit Square Place, Suite 200
Lexington, Kentucky 40509
859.252.6781

NOT FOR CONSTRUCTION

RESERVED FOR AHJ STAMP

RFP 2 DRAWINGS

UK INDOOR TRACK FACILITY
UNIVERSITY OF KENTUCKY
700 SPORTS CENTER DRIVE LEXINGTON, KENTUCKY 40506

ARCHITECTURAL

PROJECT	202258
DATE	08/31/2022

REVISIONS

No.	Description	Date

JRA ARCHITECTS HAS RETAINED AN ELECTRONIC VERSION OF THESE DRAWINGS. THE CLIENT AGREES NOT TO REUSE THESE DRAWINGS - IN ELECTRONIC OR ANY OTHER FORMAT - IN WHOLE, OR IN PART, FOR ANY PURPOSE OTHER THAN FOR THE PROJECT. THE CLIENT AGREES NOT TO TRANSFER THESE ELECTRONIC FILES TO OTHERS WITHOUT THE PRIOR WRITTEN CONSENT OF THE ARCHITECT. THE CLIENT FURTHER AGREES TO WAIVE ALL CLAIMS AGAINST THE ARCHITECT RESULTING IN ANY WAY FROM ANY CHANGES OR REUSES TO OR RELISE OF THE ELECTRONIC FILES FOR ANY OTHER PROJECT BY ANYONE OTHER THAN THE ARCHITECT.

CASEWORK DETAILS

A-561

COPYRIGHT 2022 - JRA, INC.

9/2/2022 3:24:23 PM

C:\Users\lburnett\OneDrive - JRA Architects\Documents\202258 - UK Indoor Track_lburnettNA4L5.rvt

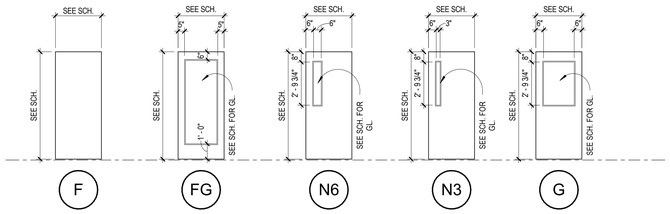

B DOOR TYPES
1/4" = 1'-0"

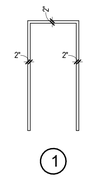

C DOOR FRAME TYPES
1/4" = 1'-0"

DOOR AND FRAME SCHEDULE

NO.	DOORS SIZE PAIR	LEAF 1 WIDTH	LEAF 2 WIDTH	HEIGHT	THICK.	MAT'L.	TYPE	GLAZ.	FRAMES MAT'L.	TYPE	DETAILS JAMB	HEAD	THRESH.	HARDWARE CLOSER	SET NO.	RATING (MIN.)	REMARKS
	--	3' - 0"		7' - 0"	1 3/4"		FG				102	202	--			0	
	--	3' - 0"		7' - 0"	1 3/4"		FG				102	202	--			0	
100A-A	PR.	3' - 0"	3' - 0"	7' - 2"	1 3/4"	ALUM.	FG	GL-2	ALUM.	A	NOTE 1	NOTE 1	--	YES	--	0	NOTE 2
100A-B	PR.	3' - 0"	3' - 0"	7' - 2"	1 3/4"	ALUM.	FG	GL-4	ALUM.	2	NOTE 1	NOTE 1	--	--	--	0	NOTE 2
100B-A	PR.	3' - 0"	3' - 0"	7' - 2"	1 3/4"	ALUM.	FG	GL-2	ALUM.	B	NOTE 1	NOTE 1	--	YES	--	0	NOTE 2
100B-B	PR.	3' - 0"	3' - 0"	7' - 2"	1 3/4"	ALUM.	FG	GL-4	ALUM.	3	NOTE 1	NOTE 1	--	--	--	0	NOTE 2
100C	PR.	3' - 0"	3' - 0"	7' - 2"	1 3/4"	ALUM.	FG	GL-4	ALUM.	4A	NOTE 1	NOTE 1	--	YES	--	0	NOTE 2
101-B	--	3' - 0"		7' - 2"	1 3/4"	HM.	F	--	HM		102	202	--	--	--	0	
101A	--	3' - 0"		7' - 2"	1 3/4"	HM.	F	--	HM		102	202	--	--	--	0	
101A-A	PR.	3' - 0"	3' - 0"	7' - 2"	1 3/4"	ALUM.	FG	GL-4	ALUM.	4	NOTE 1	NOTE 1	--	YES	--	0	NOTE 2
101A-B	PR.	3' - 0"	3' - 0"	7' - 2"	1 3/4"	ALUM.	FG	GL-2	ALUM.	E	NOTE 1	NOTE 1	--	YES	--	0	NOTE 2
101B-A	PR.	3' - 0"	3' - 0"	7' - 2"	1 3/4"	HM.	F	--	HM		102	202	--	--	--	0	
101B-B	--	3' - 0"		7' - 2"	1 3/4"	HM.	F	--	HM		102	202	--	--	--	0	
101C	--	3' - 0"		7' - 2"	1 3/4"	HM.	F	--	HM		102	202	--	YES	--	0	
102	--	4' - 0"		7' - 2"	1 3/4"	HM.	F	--	HM	1	101	201	--	YES	--	0	
103	--	3' - 0"		7' - 2"	1 3/4"	HM.	F	--	HM	1	101	201	--	--	--	0	
104	--	3' - 0"		7' - 2"	1 3/4"	HM.	F	--	HM	1	101	201	--	--	--	0	
105-A	--	4' - 0"		7' - 2"	1 3/4"	HM.	F	--	HM	1	101	201	--	--	--	0	
105-B	PR.	3' - 0"	3' - 0"	7' - 2"	1 3/4"	HM.	F	--	HM		102	202	--	--	--	0	
105A	--	3' - 0"		7' - 0"	1 3/4"	WD.	F	--	HM		101	201	--	YES	--	90	
106-A	--	3' - 0"		7' - 2"	1 3/4"	HM.	F	--	HM	1	101	201	--	YES	--	0	
106-B	--	3' - 0"		7' - 2"	1 3/4"	HM.	F	--	HM	1	101	201	--	YES	--	0	
106-C	--	3' - 0"		7' - 2"	1 3/4"	HM.	F	--	HM		102	202	--	--	--	0	
107-A	--	3' - 0"		7' - 2"	1 3/4"	HM.	F	--	HM	1	101	201	--	YES	--	0	
107-B	--	3' - 0"		7' - 2"	1 3/4"	HM.	F	--	HM	1	101	201	--	YES	--	0	
108	--	3' - 0"		7' - 2"	1 3/4"	ALUM.	FG	GL-2	ALUM.	C	NOTE 1	NOTE 1	--			0	
108A	--	2' - 6"		7' - 2"	1 3/4"	HM.	F	--	HM	1	101	201	--	--	--	0	
109	--	3' - 0"		7' - 2"	1 3/4"	HM.	F	--	HM	1	101	201	--	--	--	0	
111	--	4' - 0"		7' - 0"	1 3/4"	HM.	F	--	HM		102	202	--	--	--	0	
113-A	--	3' - 0"		7' - 2"	1 3/4"	HM.	F	--	HM		102	202	--	--	--	0	ALTERNATE NO. 1
619				12' - 0"													
620	PR.	3' - 0"	3' - 0"	7' - 2"	1 3/4"	HM.	F		HM		102	202	--	--	--	0	ALTERNATE NO. 1
OH101-A				12' - 0"													
OH101-B				12' - 0"													
OH101-C				12' - 0"													
OH101-D				12' - 0"													
OH101-E				12' - 0"													
OH101-F				12' - 0"													
OH101-G				12' - 0"													
OH101-H				12' - 0"													
OH101B-A				12' - 0"													
OH112	--	8' - 0"		10' - 0"	1 3/4"		RC									0	

DOOR SCHEDULE REMARKS

1 REFER TO PLANS, FRAME ELEVATIONS, SECTIONS, DETAILS AND PLAN DETAILS FOR ADDITIONAL NOTES AND DETAILS FOR DOOR FRAME ASSEMBLIES

2 PROVIDE AUTO-OPERATOR - SEE ELECTRICAL

GLAZING SCHEDULE

MARK	TYPE
GL-1	1" LOW-E INSULATING GLASS - GRAY TINTED
GL-2	1" LOW-E FULLY TEMPERED INSULATING GLASS - GRAY TINTED
GL-3	1/4" UNCOATED ANNEALED GLASS - CLEAR
GL-4	1/4" UNCOATED FULLY TEMPERED GLASS - CLEAR

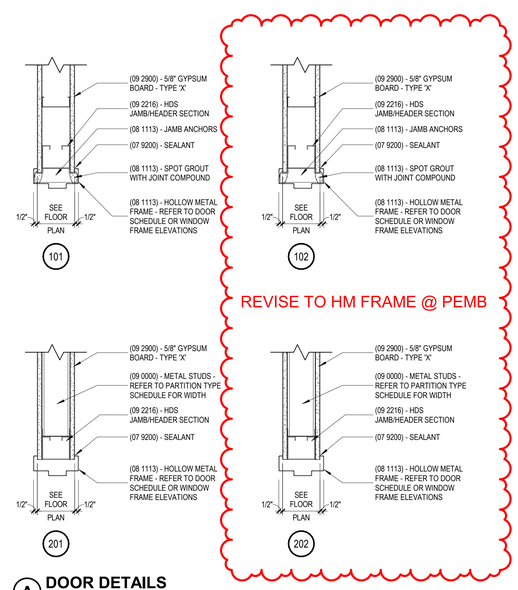

A DOOR DETAILS
1 1/2" = 1'-0"

ANSI DOOR HARDWARE LOCATIONS

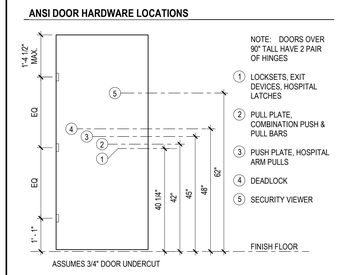

DOOR CLOSER LOCATIONS - UNLESS OTHERWISE NOTED

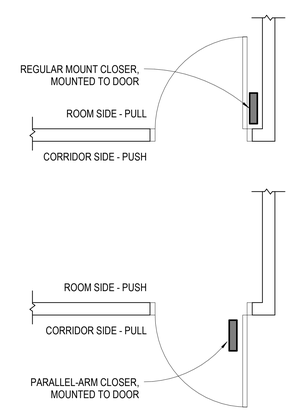

JRA architects
3225 Summit Square Place, Suite 200
Lexington, Kentucky 40509
859.252.6781

NOT FOR CONSTRUCTION

RESERVED FOR AHJ STAMP

RFP 2 DRAWINGS

UK INDOOR TRACK FACILITY
UNIVERSITY OF KENTUCKY
700 SPORTS CENTER DRIVE LEXINGTON, KENTUCKY 40506

ARCHITECTURAL

PROJECT	202258
DATE	08/31/2022

REVISIONS

No.	Description	Date
1	Revision 1	Date 1

JRA ARCHITECTS HAS RETAINED AN ELECTRONIC VERSION OF THESE DRAWINGS. THE CLIENT AGREES NOT TO REUSE THESE DRAWINGS - IN ELECTRONIC OR ANY OTHER FORMAT - IN WHOLE, OR IN PART, FOR ANY PURPOSE OTHER THAN FOR THE PROJECT. THE CLIENT AGREES NOT TO TRANSFER THESE ELECTRONIC FILES TO OTHERS WITHOUT THE PRIOR WRITTEN CONSENT OF THE ARCHITECT. THE CLIENT FURTHER AGREES TO WAIVE ALL CLAIMS AGAINST THE ARCHITECT RESULTING IN ANY WAY FROM OR ARISING OUT OF CHANGES TO OR REUSE OF THE ELECTRONIC FILES FOR ANY OTHER PROJECT BY ANYONE OTHER THAN THE ARCHITECT.

DOOR SCHEDULE AND DETAILS

A-601

COPYRIGHT 2022 - JRA, INC.

9/2/2022 3:24:25 PM

C:\Users\lburnett\OneDrive - JRA Architects\Documents\202258 - UK Indoor Track_lburnettNAL5.rvt

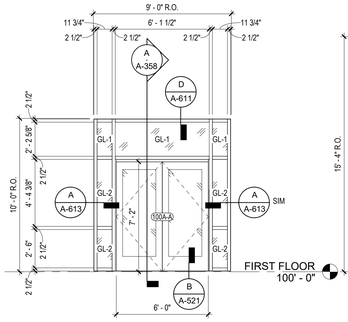

FRAME TYPE A (6" CW)

1/4" = 1'-0"

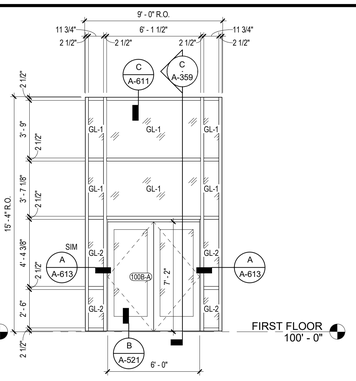

FRAME TYPE B (6" CW)

1/4" = 1'-0"

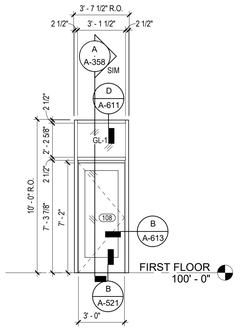

FRAME TYPE C (6" CW)

1/4" = 1'-0"

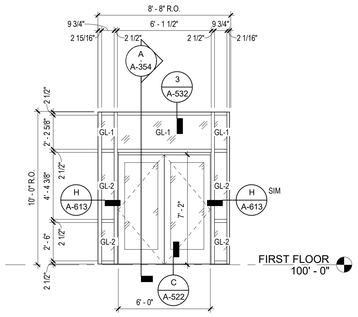

FRAME TYPE E (6" CW)

1/4" = 1'-0"

GLAZING SCHEDULE

MARK	TYPE
GL-1	1" LOW-E INSULATING GLASS - GRAY TINTED
GL-2	1" LOW-E FULLY TEMPERED INSULATING GLASS - GRAY TINTED
GL-3	1/4" UNCOATED ANNEALED GLASS - CLEAR
GL-4	1/4" UNCOATED FULLY TEMPERED GLASS - CLEAR

WINDOW ELEVATIONS LEGEND

CW - CURTAIN WALL DOOR/WINDOW FRAME SYSTEM
SF - STOREFRONT DOOR/WINDOW FRAME SYSTEM
HM - HOLLOW METAL
GW - GLAZED INTERIOR WALL

SHIM AROUND ALL FRAMES AS REQUIRED

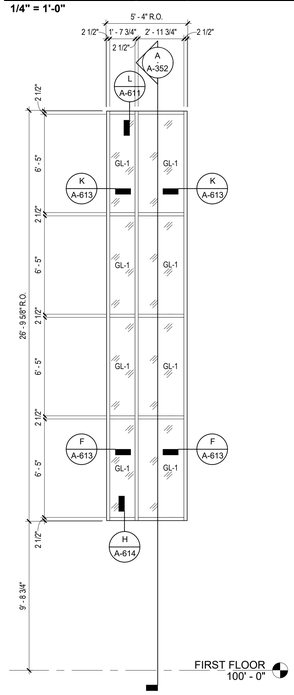

FRAME TYPE F (6" CW)

1/4" = 1'-0"

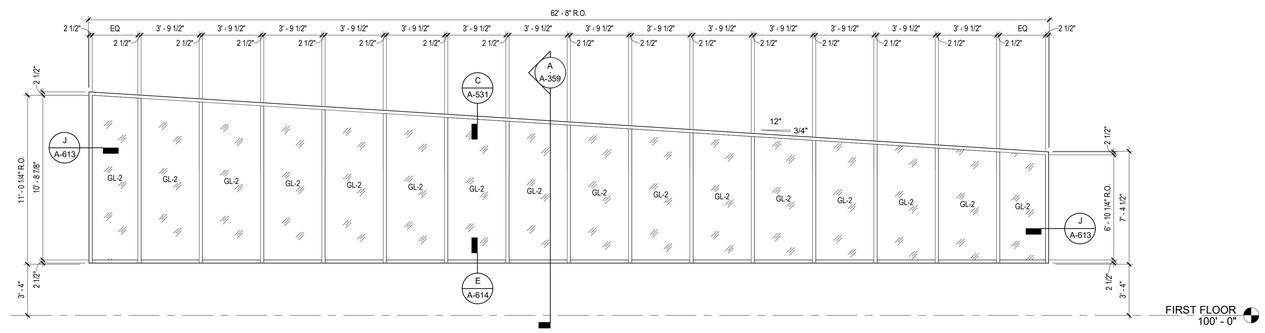

FRAME TYPE D (6" CW)

1/4" = 1'-0"

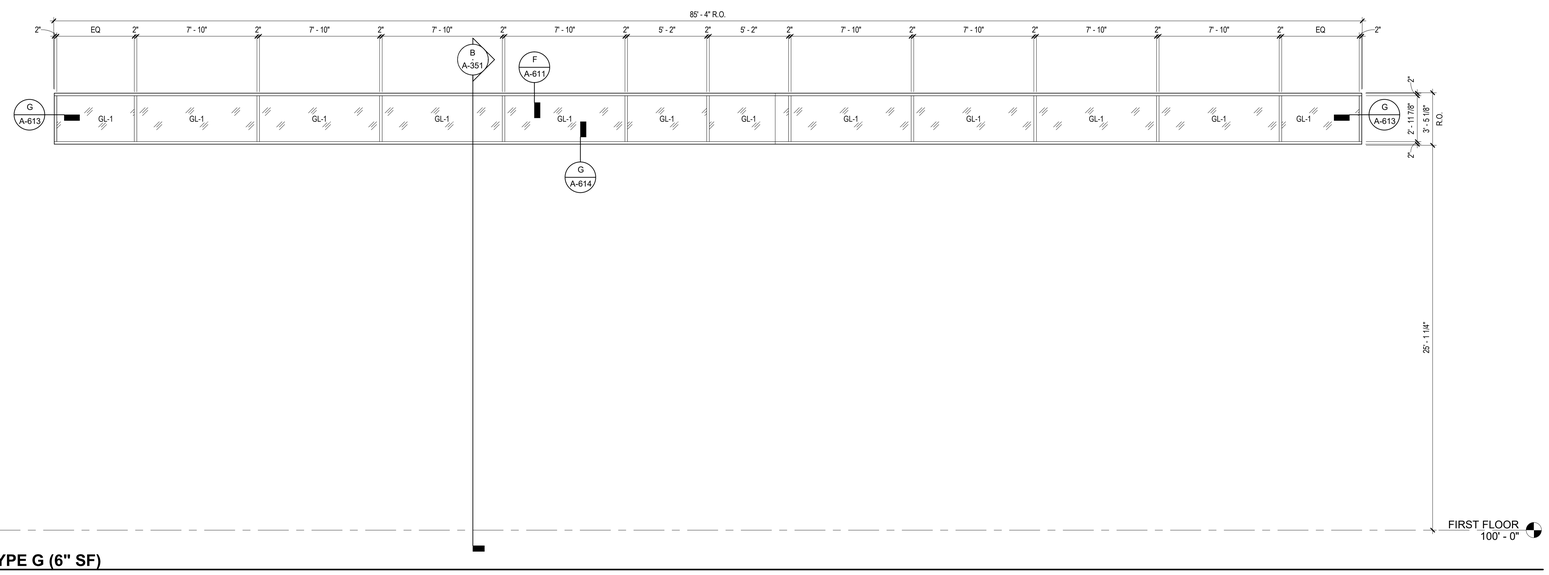

FRAME TYPE G (6" SF)

1/4" = 1'-0"

JRA architects
3225 Summit Square Place, Suite 200
Lexington, Kentucky 40509
859.252.6781

NOT FOR CONSTRUCTION

RESERVED FOR AHJ STAMP

RFP 2 DRAWINGS

UK INDOOR TRACK FACILITY
UNIVERSITY OF KENTUCKY
700 SPORTS CENTER DRIVE LEXINGTON, KENTUCKY 40506

ARCHITECTURAL

PROJECT	202258
DATE	08/31/2022

REVISIONS

No.	Description	Date

JRA ARCHITECTS HAS RETAINED AN ELECTRONIC VERSION OF THESE DRAWINGS. THE CLIENT AGREES NOT TO REUSE THESE DRAWINGS - IN ELECTRONIC OR ANY OTHER FORMAT - IN WHOLE, OR IN PART, FOR ANY PURPOSE OTHER THAN FOR THIS PROJECT. THE CLIENT AGREES NOT TO TRANSFER THESE ELECTRONIC FILES TO OTHERS WITHOUT THE PRIOR WRITTEN CONSENT OF THE ARCHITECT. THE CLIENT FURTHER AGREES TO WAIVE ALL CLAIMS AGAINST THE ARCHITECT RESULTING IN ANY WAY FROM ANY UNAUTHORIZED CHANGES TO OR REUSE OF THE ELECTRONIC FILES FOR ANY OTHER PROJECT BY ANYONE OTHER THAN THE ARCHITECT.

EXTERIOR FRAME TYPE ELEVATIONS

A-602

COPYRIGHT 2022 - JRA, INC.

9/2/2022 3:24:28 PM

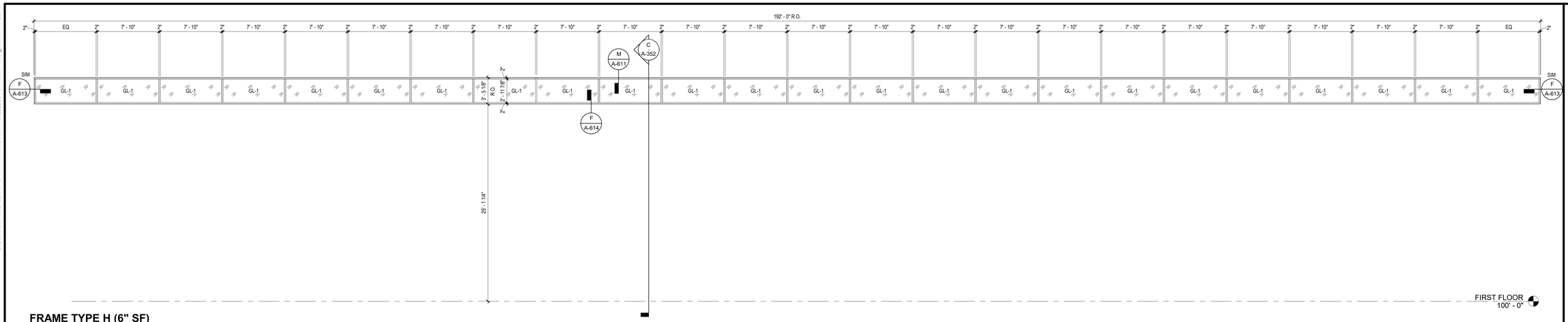

FRAME TYPE H (6" SF)

3/16" = 1'-0"

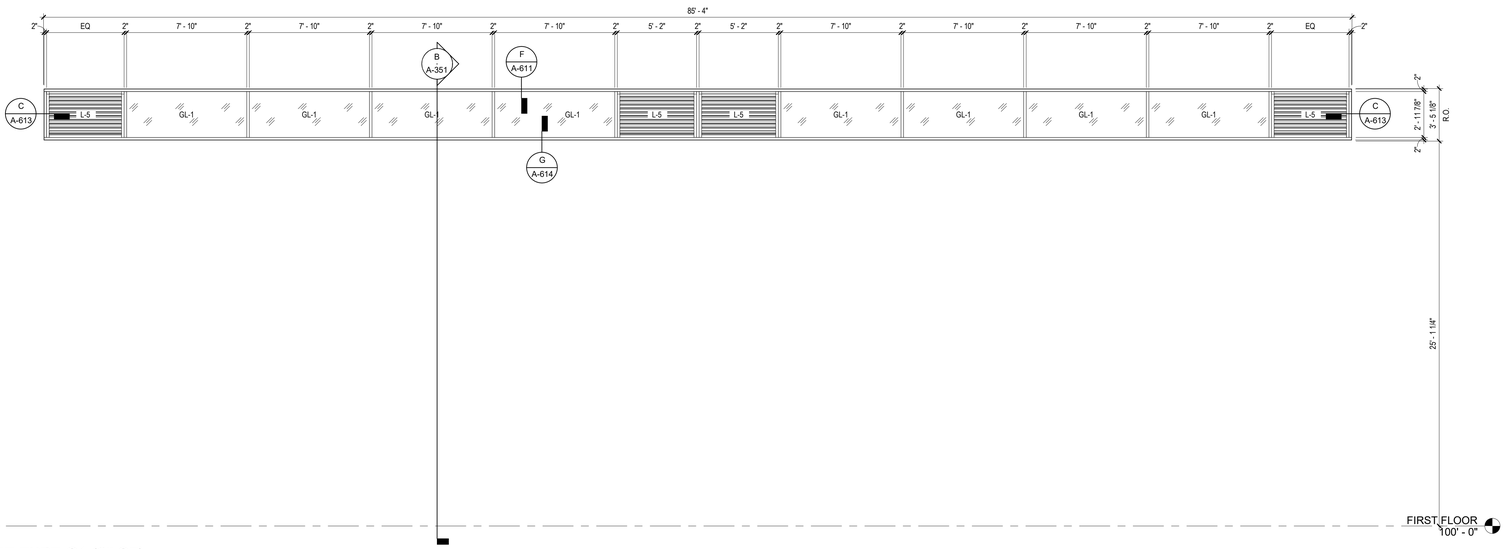

FRAME TYPE G1 (6" SF)

1/4" = 1'-0"

GLAZING SCHEDULE

MARK	TYPE
GL-1	1" LOW-E INSULATING GLASS - GRAY TINTED
GL-2	1" LOW-E FULLY TEMPERED INSULATING GLASS - GRAY TINTED
GL-3	1/4" UNCOATED ANNEALED GLASS - CLEAR
GL-4	1/4" UNCOATED FULLY TEMPERED GLASS - CLEAR

WINDOW ELEVATIONS LEGEND

CW - CURTAIN WALL DOOR/WINDOW FRAME SYSTEM
SF - STOREFRONT DOOR/WINDOW FRAME SYSTEM
HM - HOLLOW METAL
GIW - GLAZED INTERIOR WALL

SHIM AROUND ALL FRAMES AS REQUIRED

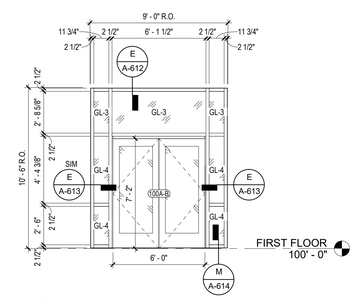

FRAME TYPE 2 (6" CW)

1/4" = 1'-0"

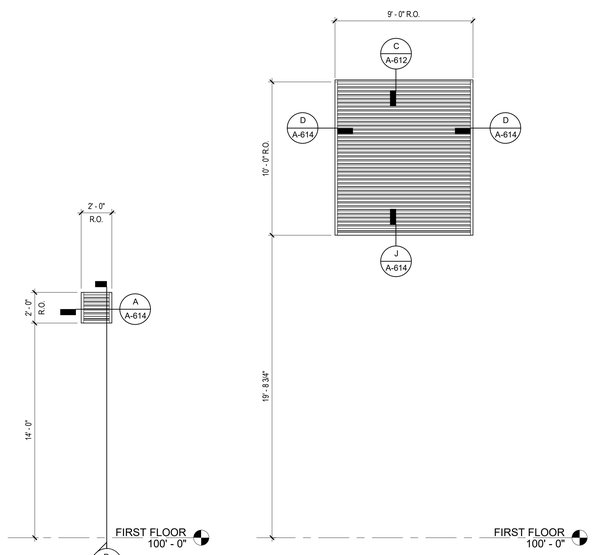

LOUVER L-1 & L-2

1/4" = 1'-0"

LOUVER L-3

1/4" = 1'-0"

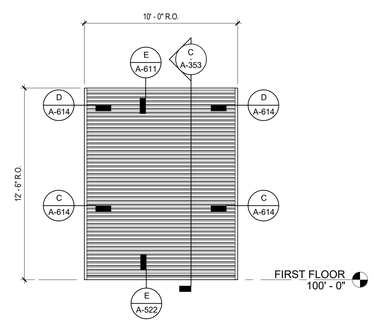

LOUVER L-4

1/4" = 1'-0"

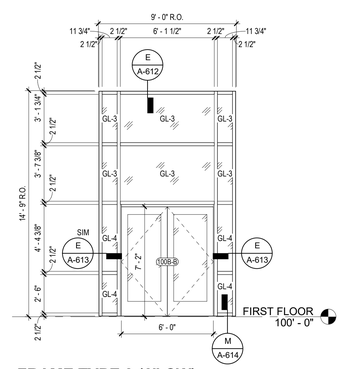

FRAME TYPE 3 (6" CW)

1/4" = 1'-0"

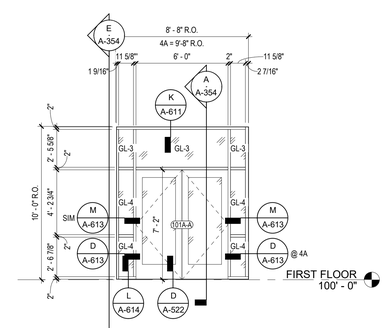

FRAME TYPE 4 (6" SF)

1/4" = 1'-0"

JRA architects
3225 Summit Square Place, Suite 200
Lexington, Kentucky 40509
859.252.6781

NOT FOR CONSTRUCTION

RESERVED FOR AHJ STAMP

RFP 2 DRAWINGS

UK INDOOR TRACK FACILITY

UNIVERSITY OF KENTUCKY
700 SPORTS CENTER DRIVE LEXINGTON, KENTUCKY 40506

ARCHITECTURAL

PROJECT	202258
DATE	08/31/2022

REVISIONS

No.	Description	Date

JRA ARCHITECTS HAS RETAINED AN ELECTRONIC VERSION OF THESE DRAWINGS. THE CLIENT AGREES NOT TO REUSE THESE DRAWINGS - IN ELECTRONIC OR ANY OTHER FORMAT - IN WHOLE, OR IN PART, FOR ANY PURPOSE OTHER THAN FOR THE PROJECT. THE CLIENT AGREES NOT TO TRANSFER THESE ELECTRONIC FILES TO OTHERS WITHOUT THE PRIOR WRITTEN CONSENT OF THE ARCHITECT. THE CLIENT FURTHER AGREES TO WAIVE ALL CLAIMS AGAINST THE ARCHITECT RESULTING IN ANY WAY FROM ANY CHANGES OR ADDITIONS TO OR REUSE OF THE ELECTRONIC FILES FOR ANY OTHER PROJECT BY ANYONE OTHER THAN THE ARCHITECT.

EXTERIOR & INTERIOR FRAME TYPE ELEVATIONS

A-603

COPYRIGHT 2022 - JRA, INC.

C:\Users\lburnett\OneDrive - JRA Architects\Documents\202258 - UK Indoor Track_lburnettNA4L5.rvt
9/2/2022 3:24:31 PM

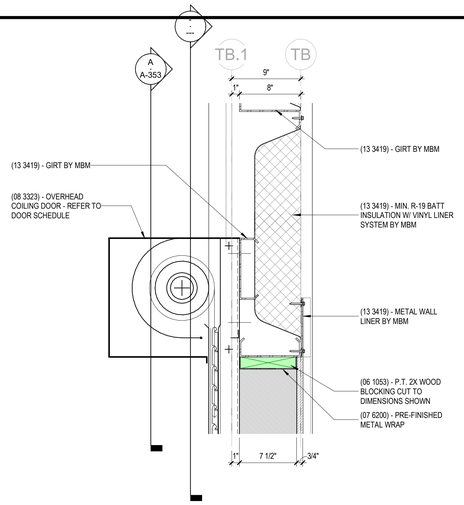

A HEAD DETAIL @ OVERHEAD DOOR - INTERIOR
1 1/2" = 1'-0"

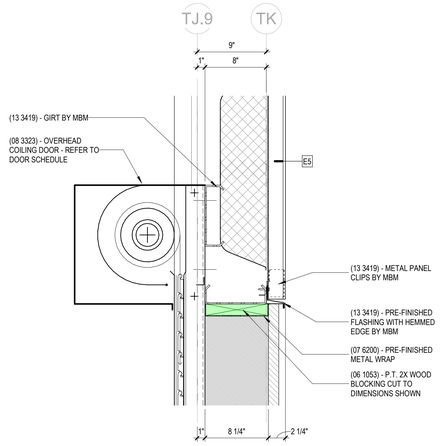

B HEAD DETAIL @ OVERHAD DOOR - EXTERIOR
1 1/2" = 1'-0"

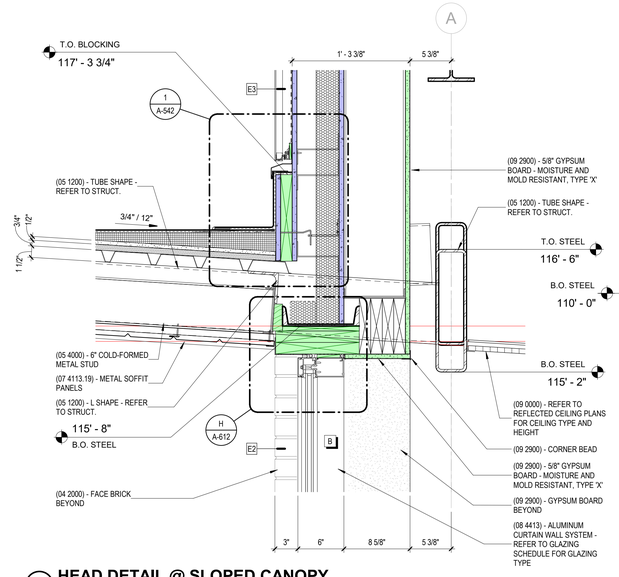

C HEAD DETAIL @ SLOPED CANOPY
1 1/2" = 1'-0"

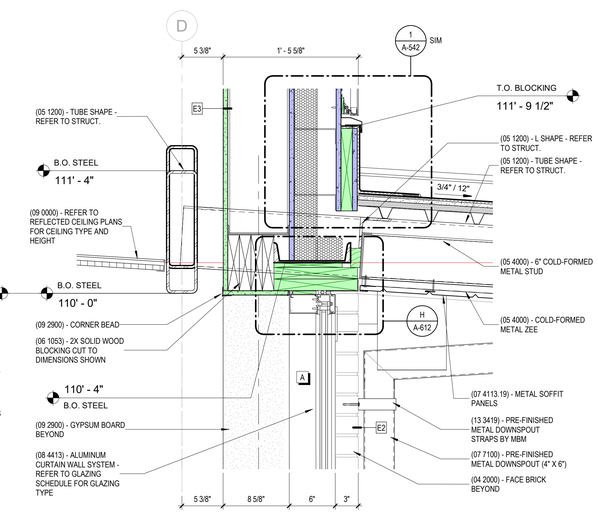

D HEAD DETAIL @ SLOPED CANOPY
1 1/2" = 1'-0"

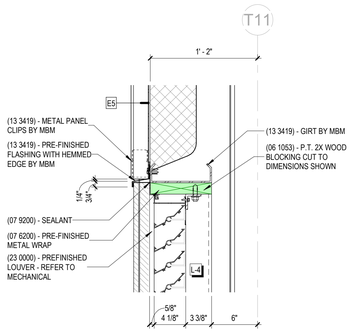

E HEAD DETAIL @ LOUVER
1 1/2" = 1'-0"

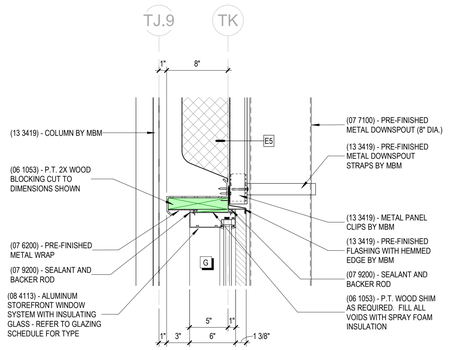

F HEAD DETAIL @ STOREFRONT - EXTERIOR
1 1/2" = 1'-0"

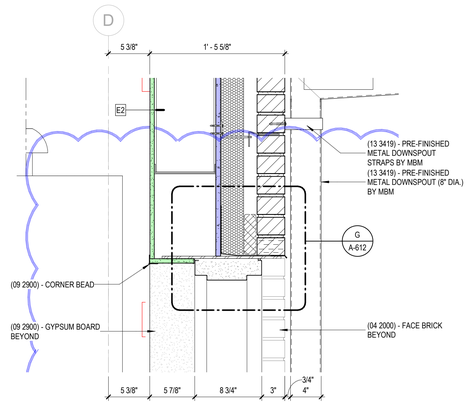

G HEAD DETAIL @ HM DOOR
1 1/2" = 1'-0"

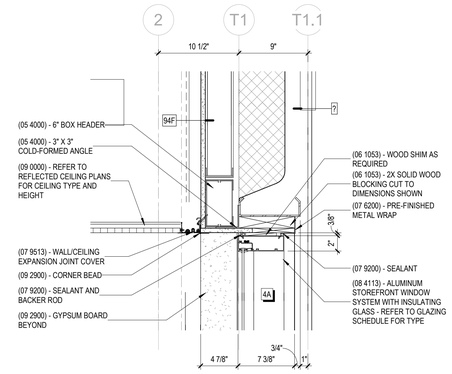

H HEAD DETAIL @ STOREFRONT - INTERIOR
1 1/2" = 1'-0"

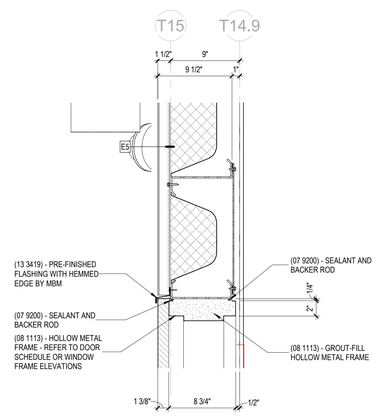

J HEAD DETAIL @ HM DOOR
1 1/2" = 1'-0"

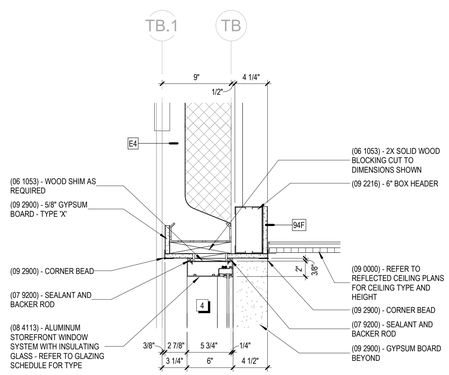

K HEAD DETAIL @ STOREFRONT - INTERIOR
1 1/2" = 1'-0"

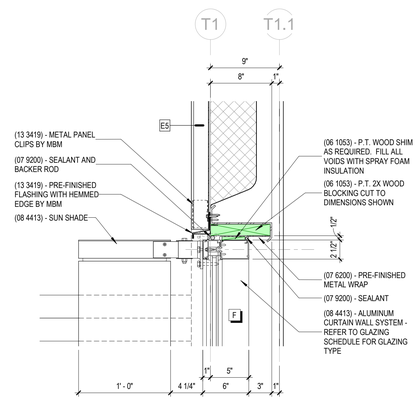

L HEAD DETAIL @ VERTICAL SUN SHADE
1 1/2" = 1'-0"

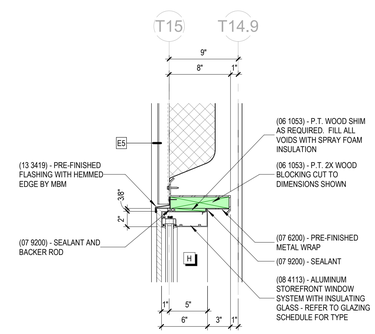

M HEAD DETAIL @ STOREFRONT - EXTERIOR
1 1/2" = 1'-0"

JRA architects
3225 Summit Square Place, Suite 200
Lexington, Kentucky 40509
859.252.6781

NOT FOR CONSTRUCTION

RESERVED FOR AHJ STAMP

RFP 2 DRAWINGS

UK INDOOR TRACK FACILITY
UNIVERSITY OF KENTUCKY
700 SPORTS CENTER DRIVE LEXINGTON, KENTUCKY 40506

ARCHITECTURAL

PROJECT	202258
DATE	08/31/2022

REVISIONS

No.	Description	Date

JRA ARCHITECTS HAS RETAINED AN ELECTRONIC VERSION OF THESE DRAWINGS. THE CLIENT AGREES NOT TO REUSE THESE DRAWINGS - IN ELECTRONIC OR ANY OTHER FORMAT - IN WHOLE, OR IN PART, FOR ANY PURPOSE OTHER THAN FOR THE PROJECT DESCRIBED. THE CLIENT AGREES NOT TO TRANSFER THESE ELECTRONIC FILES TO OTHERS WITHOUT THE PRIOR WRITTEN CONSENT OF THE ARCHITECT. THE CLIENT FURTHER AGREES TO WAIVE ALL CLAIMS AGAINST THE ARCHITECT RESULTING IN ANY WAY FROM ANY UNAUTHORIZED CHANGES TO OR REUSE OF THE ELECTRONIC FILES FOR ANY OTHER PROJECT BY ANYONE OTHER THAN THE ARCHITECT.

HEAD DETAILS

A-611

COPYRIGHT 2022 - JRA, INC.

C:\Users\lburnett\OneDrive - JRA Architects\Documents\202258 - UK Indoor Track_lburnettNAL5.rvt

9/2/2022 3:24:35 PM

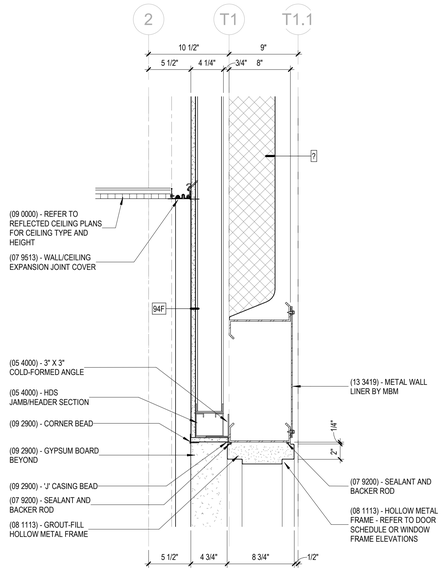

A HEAD DETAIL @ HM DOOR - INTERIOR
1 1/2" = 1'-0"

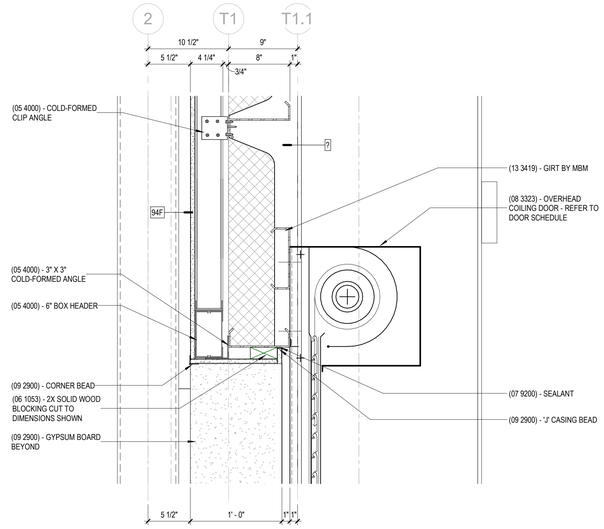

B HEAD DETAIL @ OVERHEAD DOOR - INTERIOR
1 1/2" = 1'-0"

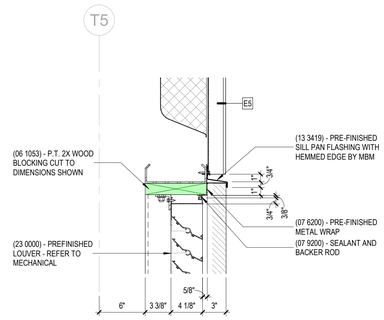

C HEAD DETAIL @ LOUVER
1 1/2" = 1'-0"

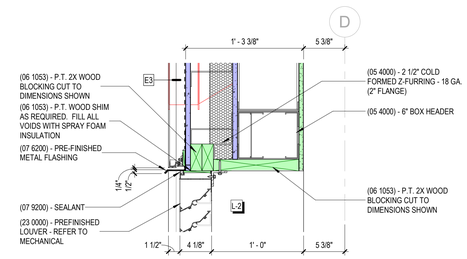

D HEAD DETAIL @ LOUVER
1 1/2" = 1'-0"

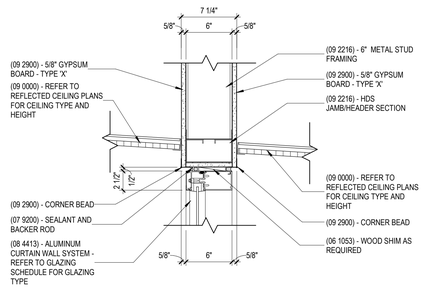

E CW HEAD @ INTERIOR
1 1/2" = 1'-0"

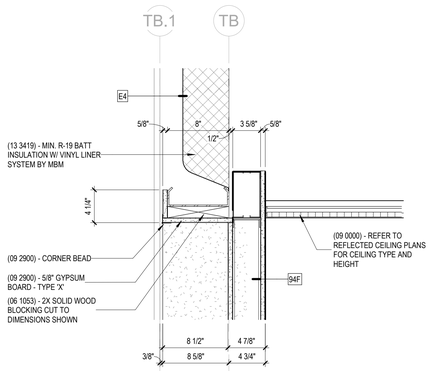

F HEAD DETAIL @ TRACK VESTIBULE
1 1/2" = 1'-0"

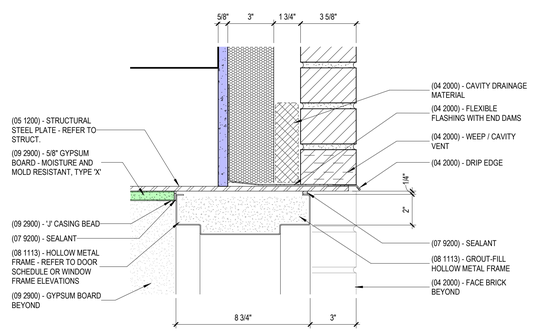

G ENLARGED HEAD DETAIL (HM)
3" = 1'-0"

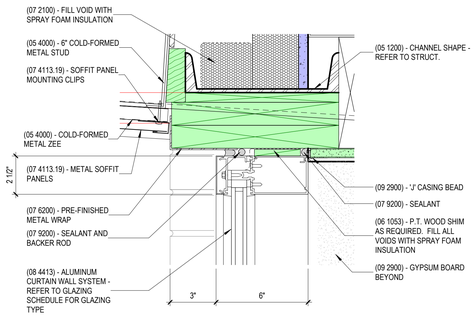

H ENLARGED HEAD DETAIL (CW)
3" = 1'-0"

JRA architects
3225 Summit Square Place, Suite 200
Lexington, Kentucky 40509
859.252.6781

NOT FOR CONSTRUCTION

RESERVED FOR AHJ STAMP

RFP 2 DRAWINGS

UK INDOOR TRACK FACILITY
UNIVERSITY OF KENTUCKY
700 SPORTS CENTER DRIVE LEXINGTON, KENTUCKY 40506

ARCHITECTURAL

PROJECT	202258
DATE	08/31/2022

REVISIONS

No.	Description	Date

JRA ARCHITECTS HAS RETAINED AN ELECTRONIC VERSION OF THESE DRAWINGS. THE CLIENT AGREES NOT TO REUSE THESE DRAWINGS - IN ELECTRONIC OR ANY OTHER FORMAT - IN WHOLE, OR IN PART, FOR ANY PURPOSE OTHER THAN FOR THE PROJECT. THE CLIENT AGREES NOT TO TRANSFER THESE ELECTRONIC FILES TO OTHERS WITHOUT THE PRIOR WRITTEN CONSENT OF THE ARCHITECT. THE CLIENT FURTHER AGREES TO WAIVE ALL CLAIMS AGAINST THE ARCHITECT ARISING OUT OF ANY WAY FROM ANY UNAUTHORIZED CHANGES TO OR REUSE OF THE ELECTRONIC FILES FOR ANY OTHER PROJECT BY ANYONE OTHER THAN THE ARCHITECT.

HEAD DETAILS

A-612

COPYRIGHT 2022 - JRA, INC.

C:\Users\lburnett\OneDrive - JRA Architects\Documents\202258 - UK Indoor Track_lburnettNAL5.rvt

9/2/2022 3:24:38 PM

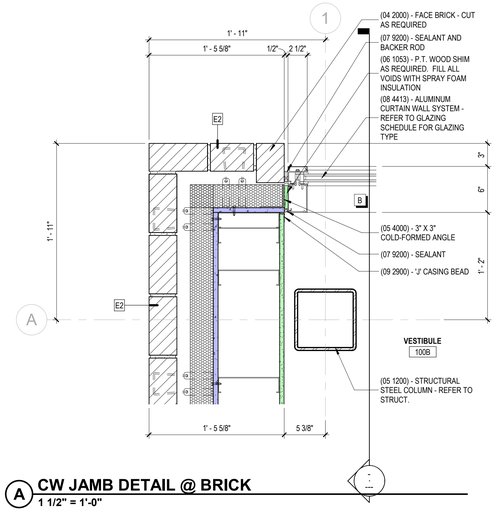

A CW JAMB DETAIL @ BRICK
1 1/2" = 1'-0"

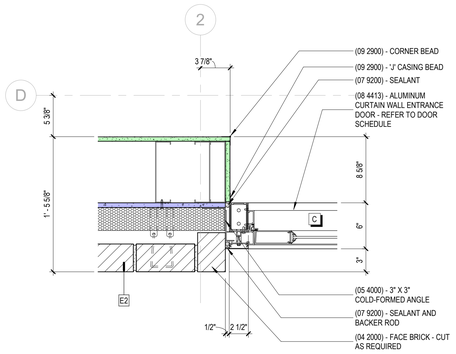

B CW DOOR JAMB @ BRICK
1 1/2" = 1'-0"

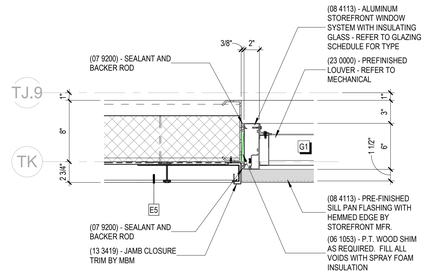

C SF JAMB DETAIL @ LOUVER (L-5)
1 1/2" = 1'-0"

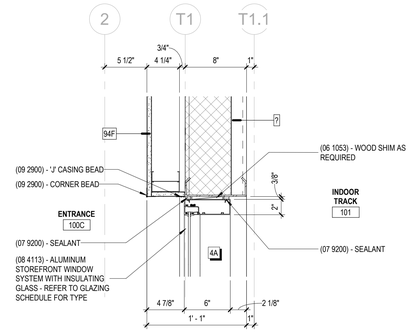

D SF JAMB DETAIL - INTERIOR
1 1/2" = 1'-0"

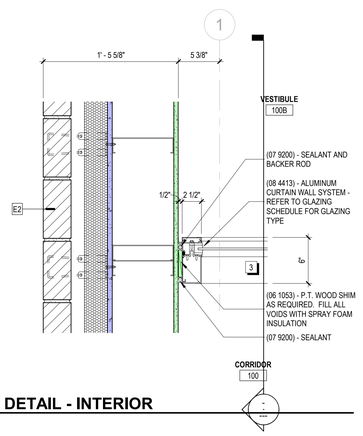

E CW JAMB DETAIL - INTERIOR
1 1/2" = 1'-0"

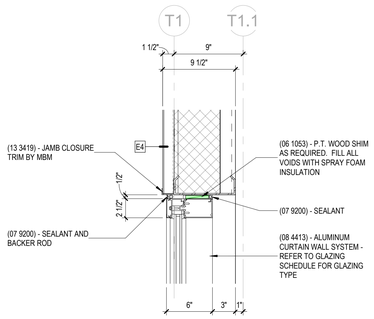

F CW JAMB DETAIL - LOW
1 1/2" = 1'-0"

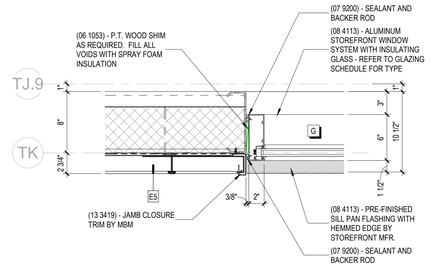

G SF JAMB DETAIL
1 1/2" = 1'-0"

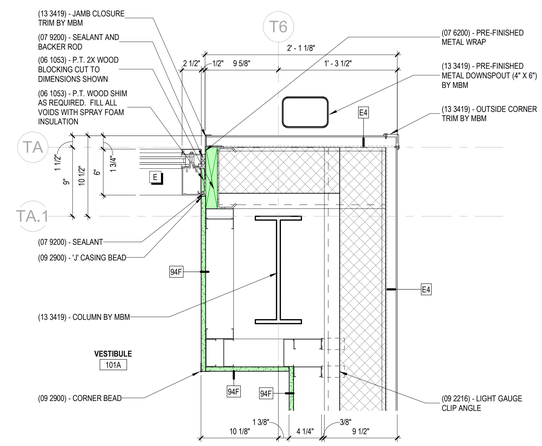

H CW JAMB DETAIL @ TRACK STORAGE
1 1/2" = 1'-0"

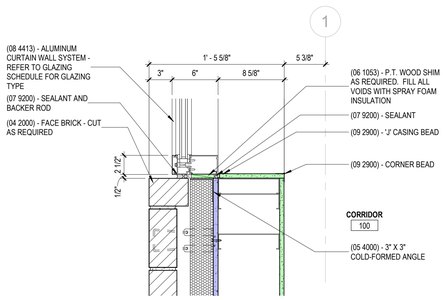

J TYPICAL CW JAMB DETAIL @ BRICK
1 1/2" = 1'-0"

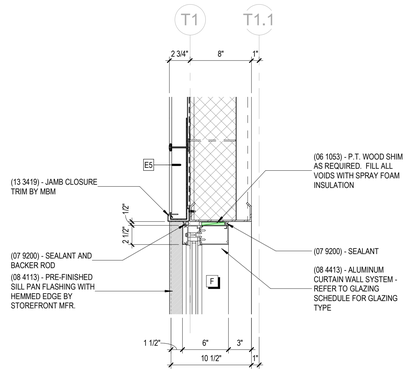

K CW JAMB DETAIL - HIGH
1 1/2" = 1'-0"

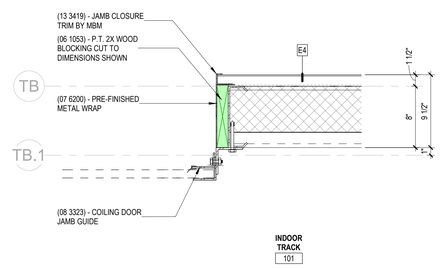

L OVERHEAD DOOR JAMB @ PEMB
1 1/2" = 1'-0"

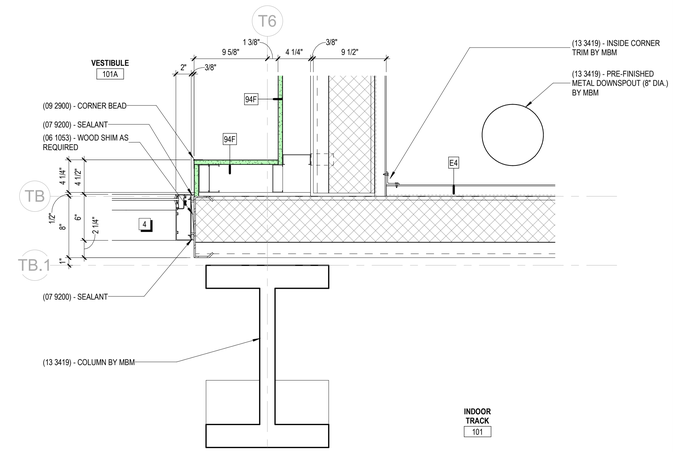

M SF JAMB DETAIL @ TRACK STORAGE
1 1/2" = 1'-0"

JRA architects
3225 Summit Square Place, Suite 200
Lexington, Kentucky 40509
859.252.6781

NOT FOR CONSTRUCTION

RESERVED FOR AHJ STAMP

RFP 2 DRAWINGS

UK INDOOR TRACK FACILITY
UNIVERSITY OF KENTUCKY
700 SPORTS CENTER DRIVE LEXINGTON, KENTUCKY 40506

ARCHITECTURAL

PROJECT	202258
DATE	08/31/2022

REVISIONS

No.	Description	Date

JRA ARCHITECTS HAS RETAINED AN ELECTRONIC VERSION OF THESE DRAWINGS. THE CLIENT AGREES NOT TO REUSE THESE DRAWINGS - IN ELECTRONIC OR ANY OTHER FORMAT - IN WHOLE, OR IN PART, FOR ANY PURPOSE OTHER THAN FOR THE PROJECT. THE CLIENT AGREES NOT TO TRANSFER THESE ELECTRONIC FILES TO OTHERS WITHOUT THE PRIOR WRITTEN CONSENT OF THE ARCHITECT. THE CLIENT FURTHER AGREES TO WAIVE ALL CLAIMS AGAINST THE ARCHITECT RESULTING IN ANY WAY FROM ANY UNAUTHORIZED CHANGES TO OR REUSE OF THESE ELECTRONIC FILES FOR ANY OTHER PROJECT BY ANYONE OTHER THAN THE ARCHITECT.

JAMB DETAILS

A-613

COPYRIGHT 2022 - JRA, INC.

C:\Users\Burnett\OneDrive - JRA Architects\Documents\202258 - UK Indoor Track_Burnett\NAL5.rvt
9/2/2022 3:24:42 PM

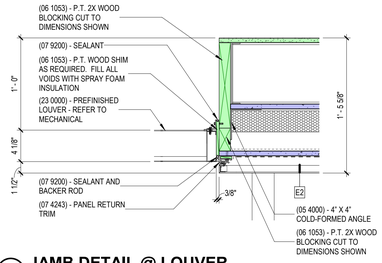

A JAMB DETAIL @ LOUVER
1 1/2" = 1'-0"

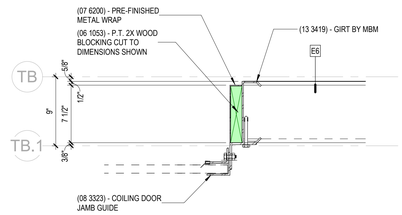

B JAMB DETAIL @ OH DOOR (INTERIOR)
1 1/2" = 1'-0"

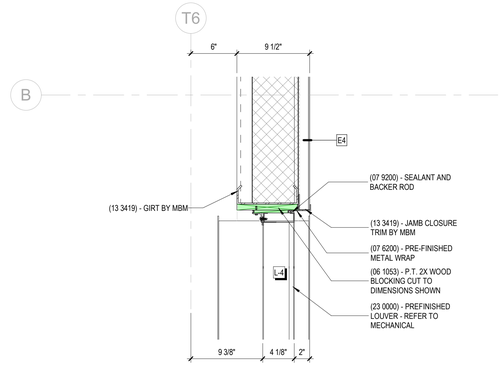

C JAMB DETAIL @ LOUVER (FLUSH PANEL)
1 1/2" = 1'-0"

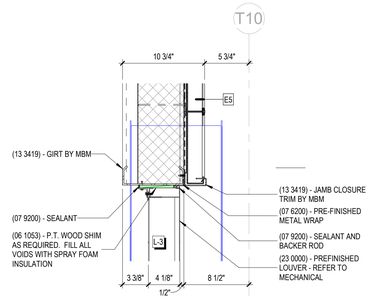

D JAMB DETAIL @ LOUVER (STANDING SEAM)
1 1/2" = 1'-0"

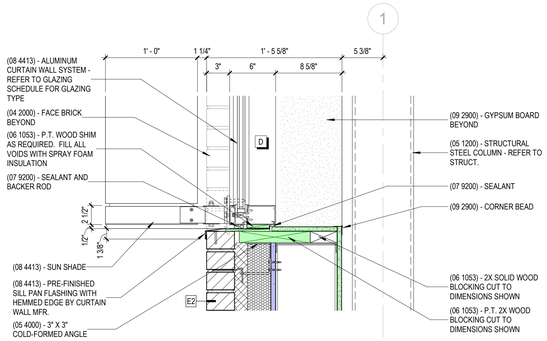

E SILL DETAIL @ SUNSHADE / BRICK
1 1/2" = 1'-0"

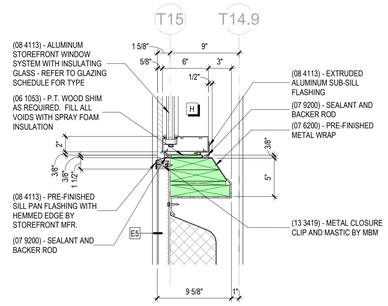

F SILL DETAIL @ SF
1 1/2" = 1'-0"

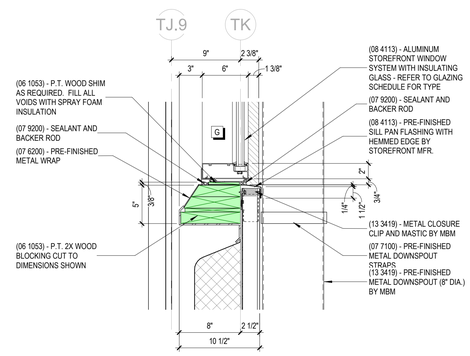

G SILL DETAIL @ SF
1 1/2" = 1'-0"

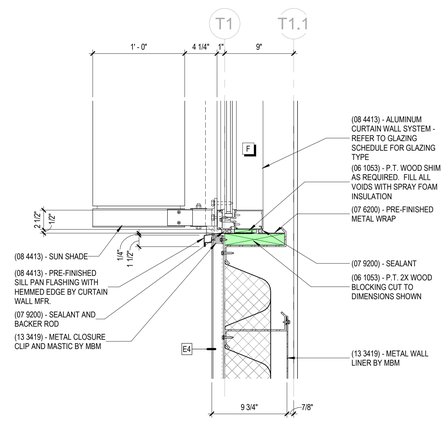

H SILL DETAIL @ SUNSHADE / METAL PANEL
1 1/2" = 1'-0"

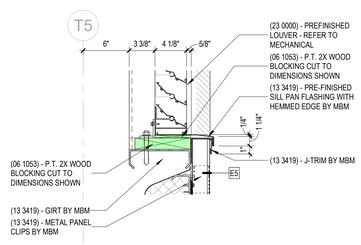

J SILL DETAIL @ LOUVER
1 1/2" = 1'-0"

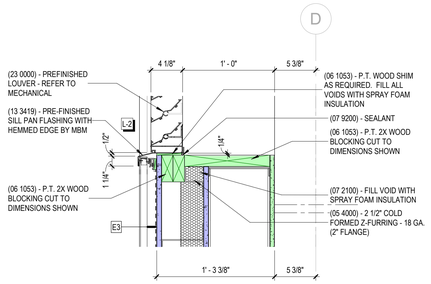

K SILL DETAIL @ LOUVER
1 1/2" = 1'-0"

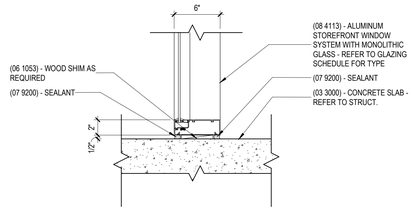

L INTERIOR STOREFRNT SILL DETAIL
1 1/2" = 1'-0"

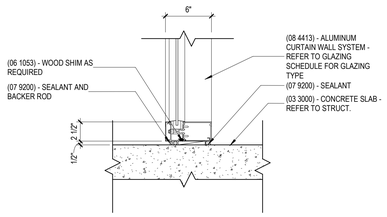

M INTERIOR CURTAINWALL SILL DETAIL
1 1/2" = 1'-0"

JRA architects
3225 Summit Square Place, Suite 200
Lexington, Kentucky 40509
859.252.6781

NOT FOR CONSTRUCTION

RESERVED FOR AHJ STAMP

RFP 2 DRAWINGS

UK INDOOR TRACK FACILITY
UNIVERSITY OF KENTUCKY
700 SPORTS CENTER DRIVE LEXINGTON, KENTUCKY 40506

ARCHITECTURAL

PROJECT	202258
DATE	08/31/2022

REVISIONS

No.	Description	Date

JRA ARCHITECTS HAS RETAINED AN ELECTRONIC VERSION OF THESE DRAWINGS. THE CLIENT AGREES NOT TO REUSE THESE DRAWINGS - IN ELECTRONIC OR ANY OTHER FORMAT - IN WHOLE, OR IN PART, FOR ANY PURPOSE OTHER THAN FOR THIS PROJECT. THE CLIENT AGREES NOT TO TRANSFER THESE ELECTRONIC FILES TO OTHERS WITHOUT THE PRIOR WRITTEN CONSENT OF THE ARCHITECT. THE CLIENT FURTHER AGREES TO WAIVE ALL CLAIMS AGAINST THE ARCHITECT RESULTING IN ANY WAY FROM ANY UNAUTHORIZED CHANGES TO OR REUSE OF THE ELECTRONIC FILES FOR ANY OTHER PROJECT BY ANYONE OTHER THAN THE ARCHITECT

JAMB & SILL DETAILS

A-614

COPYRIGHT 2022 - JRA, INC.

C:\Users\lburnett\OneDrive - JRA Architects\Documents\202258 - UK Indoor Track_lburnettNAL5.rvt
9/2/2022 3:24:46 PM

C:\Users\lburnett\OneDrive - JRA Architects\Documents\202258 - UK Indoor Track_lburnettNAL5.rvt

ROOM FINISH SCHEDULE

NUMBER	NAME	FLOOR FINISH	BASE FINISH	WALL FINISH	CEILING FINISH	NOTES
100	CORRIDOR	C-2				
100A	VESTIBULE	C-1				
100B	VESTIBULE	C-1				
100C	ENTRANCE	C-2				
101	INDOOR TRACK	--				
101A	VESTIBULE	C-1				
101B	TRACK STORAGE	SC-1				
102	MECH ACCESS	SC-1				
103	ELECTRICAL	SC-1				
104	DATA	SC-1				
105	MECHANICAL	SC-1				
105A	FP ROOM					
106	MEN	PT-1				
107	WOMEN	PT-1				
108	VESTIBULE	C-1				
108A	CHASE	SC-1				
109	JAN	SC-1				
110	BAG DROP	--				
111	TRAINING	PT-1				
112	TRACK CLEANER	--				
113	BAND STORAGE ALTERNATE	SC-1				
114	AIR HANDLER	SC-1				
115	AIR HANDLER	SC-1				

FINISH MATERIAL SCHEDULE - BASIS-OF-DESIGN MATERIALS

Finish Type	KEY NAME	SPEC	MATERIAL TYPE	MANUFACTURER	SIZE	PRODUCT NAME	MODEL / NUMBER	FINISH	REMARKS
1 - FLOORING									
1 - FLOORING	SC-1	03 3000	SEALED CONCRETE	--	--	--	--	--	
1 - FLOORING	G-2	09 3013	GROUT	TEC	--	EPOXY GROUT	COLOR TBD	--	GROUT FOR FLOOR TILE PT-1
1 - FLOORING	PT-1	09 3013	PORCELAIN TILE		12" X 24"			--	FLOOR TILE, INSTALL TBD
1 - FLOORING	TF-1	09 6566	TRACK FLOORING					--	
1 - FLOORING	CPT-1	09 6813	CARPET TILE	J+J FLOORING	24" X 24"	KINETEX	URBAN AVENUE ZONE 1560	--	INSTALL:
1 - FLOORING	CPT-2	09 6813	WALK-OFF CARPET TILE	SHAW CONTRACT	24" X 24"	WELCOME II	STERLING 31557	--	
2 -FLOOR BASE									
2 -FLOOR BASE	TB-1	09 3013	BASE - PORCELAIN TILE		6" X 24"			--	CUT TILE BASE - CAP W/ SCHLUTER TRIM - SEE DETAIL
2 -FLOOR BASE	RB-1	09 6513	BASE - RESILIENT		4"	RUBBER		--	
3 - WALLS									
3 - WALLS	G-1	09 3013	GROUT	TEC	--	EPOXY GROUT	COLOR TBD	--	GROUT FOR WALL TILE WT-1
3 - WALLS	WT-1	09 3013	WALL TILE	ANATOLIA TILE	8" X 24"	SOHO	CANVAS WHITE	GLOSSY	INSTALL TBD - TRIM W/ SCHLUTER TRIM WHERE EDGE IS EXPOSED, CORNERS, ETC.
3 - WALLS	WT-2	09 3013	WALL TILE						
4 - PAINT									
4 - PAINT	P-1	09 9123	PAINT	SHERWIN WILLIAMS	--	SNOWBOUND	SW 7004	SATIN	FIELD
4 - PAINT	P-2	09 9123	PAINT	SHERWIN WILLIAMS	--	TRICORN BLACK	SW 6258	SEMI GLOSS	TRIM
4 - PAINT	P-3	09 9123	PAINT	SHERWIN WILLIAMS	--		COLOR TBD	SATIN	ACCENT
4 - PAINT	P-6	09 9123	PAINT	SHERWIN WILLIAMS	--	HIGH REFLECTIVE WHITE	SW 7757	FLAT	CEILINGS AND BOTTOM OF SOFFITS UNO
4 - PAINT	P-7	09 9123	PAINT	SHERWIN WILLIAMS	--	WHITE	DRY FALL	FLAT	GYM EXPOSED CEILING
5 - CEILINGS									
5 - CEILINGS	APC-1	09 5113	ACOUSTICAL PANEL CEILING	ARMSTRONG	24" X 24"	LAY IN 15/16" GRID		WHITE	
6 - CASEWORK & TRIM									
6 - CASEWORK & TRIM	WD-4	06 2023	WOOD CASEWORK, DOORS, AND CARPENTRY	CUSTOM	--	--			
6 - CASEWORK & TRIM	L-1	06 4116	PLASTIC LAMINATE	WILSONART	--	PLASTIC LAMINATE	COLOR TBD	FINE VELVET FINISH	CABINET FRONTS/CASEWORK BODY/MEDIA CENTER TREE BODY
6 - CASEWORK & TRIM	L-2	06 4116	PLASTIC LAMINATE		--	PLASTIC LAMINATE		FINE VELVET FINISH	COUNTERTOPS?, EASED EDGE
6 - CASEWORK & TRIM	SS-1	12 3661.16	SOLID SURFACE	WILSONART	1/2"	SOLID SURFACE		--	COUNTERTOPS, EASED EDGE
6 - CASEWORK & TRIM	SS-2	12 3661.16	SOLID SURFACE	WILSONART	1/2"	SOLID SURFACE		--	
7 - MISCELLANEOUS FINISHES									
7 - MISCELLANEOUS FINISHES	--	08 1216, 08 4113, 08 4413	ALUMINUM WINDOW AND DOOR FRAMING	--	--	CLEAR	ANODIZED ALUMINUM	CLASS I	
7 - MISCELLANEOUS FINISHES	--	10 1100	TACK BOARD	CLARIDGE PRODUCTS	--	CONCEPT - TACK BOARD	COLOR TBD	--	
7 - MISCELLANEOUS FINISHES	MB1	10 1100	MARKER BOARDS	CLARIDGE PRODUCTS	--	PROFILE – FRAMELESS MAGNETIC WHITEBOARD	WRITING SURFACE: WHITEBOARD PORCELAIN	WHITE	MOUNTING: INVISIMOUNT
7 - MISCELLANEOUS FINISHES	--	10 2113.19	TOILET PARTITIONS	SCRANTON	--	TRADITIONAL		ORANGE PEEL	
7 - MISCELLANEOUS FINISHES	W-1	10 2600	CORNER GUARDS	CONSTRUCTION SPECIALTIES	--	--		--	SEE PLANS FOR LOCATIONS
7 - MISCELLANEOUS FINISHES	RS1/RS2	12 2413	ROLLER SHADES	MECHO OR EQUAL	--	--		TBD	

ROOM FINISH SCHEDULE KEYED REMARKS

1. REFER TO FLOOR PLANS, REFLECTED CEILING PLANS, AND INTERIOR ELEVATIONS. FOR FINISH MATERIAL LOCATIONS AND MORE DETAILS.
2. ONLY VERTICAL SURFACE OF CEILING SOFFITS TO BE PAINTED WITH ACCENT COLOR. ALL HORIZONTAL GYP. BD. CEILING SURFACES TO BE PORTER PAINT CEILING WHITE, FLAT. REFER TO REFLECTED CEILING PLANS FOR LOCATIONS.
3. INSTALL CARPET TILES IN MONOLITHIC PATTERN.
4. ACCENT TILE (T-2) TO BE RANDOM SINGLE TILE DROP PATTERN. REFER TO FINISH FLOOR PLAN.
5. CARPET BORDER TO ALIGN WITH TILE BORDER. REFER TO FINISH FLOOR PLAN.
6. MILLWORK BASE TO BE MITERED AT INSIDE AND OUTSIDE CORNERS.
7. EXPOSED STRUCTURE TO BE PAINTED.

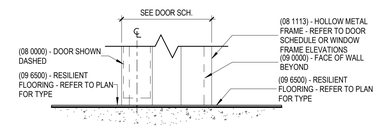

5 **TRANSITION DETAIL**
3" = 1'-0"

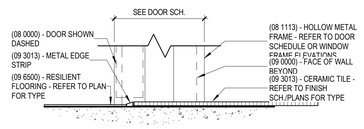

4 **TRANSITION DETAIL**
3" = 1'-0"

3 **TRANSITION DETAIL**
3" = 1'-0"

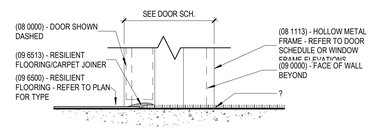

2 **TRANSITION DETAIL**
3" = 1'-0"

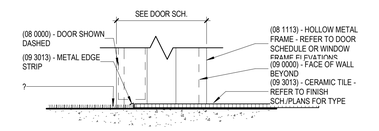

1 **TRANSITION DETAIL**
3" = 1'-0"

JRA architects
3225 Summit Square Place, Suite 200
Lexington, Kentucky 40509
859.252.6781

NOT FOR CONSTRUCTION

RESERVED FOR AHJ STAMP

RFP 2 DRAWINGS

UK INDOOR TRACK FACILITY
UNIVERSITY OF KENTUCKY
700 SPORTS CENTER DRIVE LEXINGTON, KENTUCKY 40506

ARCHITECTURAL

PROJECT	202258
DATE	08/31/2022

REVISIONS

No.	Description	Date

JRA ARCHITECTS HAS RETAINED AN ELECTRONIC VERSION OF THESE DRAWINGS. THE CLIENT AGREES NOT TO REPRODUCE THE ELECTRONIC FILES, ELECTRONIC OR ANY OTHER FORMAT - IN WHOLE, OR IN PART, FOR ANY PURPOSE OTHER THAN FOR THE PROJECT. THE CLIENT AGREES NOT TO TRANSFER THESE ELECTRONIC FILES TO OTHERS WITHOUT THE PRIOR WRITTEN CONSENT OF THE ARCHITECT. THE CLIENT FURTHER AGREES TO WAIVE ALL CLAIMS AGAINST THE ARCHITECT RESULTING IN ANY WAY FROM ANY UNAUTHORIZED CHANGES TO OR REUSE OF THE ELECTRONIC FILES FOR ANY OTHER PROJECT BY ANYONE OTHER THAN THE ARCHITECT.

ROOM FINISH SCHEDULE

A-621

COPYRIGHT 2022 - JRA, INC.

9/2/2022 3:24:48 PM

C:\Users\lburnett\OneDrive - JRA Architects\Documents\202258 - UK Indoor Track_lburnettNAL5.rvt

BUILDING SIGNAGE SCHEDULE

DOOR MARK	ROOM NUMBER	ROOM NAME	SIGN NAME	SIGN TYPE	REMARKS
618					
FIRST FLOOR					
	101	INDOOR TRACK			
	101	INDOOR TRACK			
100A-A					
100A-B	100A	VESTIBULE			
100B-A	100B	VESTIBULE			
100B-B	100	CORRIDOR			
100C	100C	ENTRANCE			
101-B	115	AIR HANDLER			
101A	101	INDOOR TRACK			
101A-A	101	INDOOR TRACK			
101A-B	101A	VESTIBULE			
101B-A	101B	TRACK STORAGE			
101B-B	101B	TRACK STORAGE			
101C	101	INDOOR TRACK			
102	100C	ENTRANCE			
103	102	MECH ACCESS			
104	102	MECH ACCESS			
105-A	102	MECH ACCESS			
105-B	105	MECHANICAL			
105A	105	MECHANICAL			
106-A	100C	ENTRANCE			
106-B	108	VESTIBULE			
106-C	114	AIR HANDLER			
107-A	100C	ENTRANCE			
107-B	107	WOMEN			
108					
108A	108A	CHASE			
109	100C	ENTRANCE			
111	111	TRAINING			
113-A	113	BAND STORAGE ALTERNATE			
619	101B	TRACK STORAGE			
620	113	BAND STORAGE ALTERNATE			
OH101-A	101	INDOOR TRACK			
OH101-B	101	INDOOR TRACK			
OH101-C	101	INDOOR TRACK			
OH101-D	101	INDOOR TRACK			
OH101-E					
OH101-F					
OH101-G					
OH101-H					
OH101B-A	101	INDOOR TRACK			
OH112	112	TRACK CLEANER			

DIMENSIONAL LETTER SIGNAGE SCHEDULE - 10 1419

CHARACTER TYPE	SIZE: CHARACTER WIDTH	SIZE: CHARACTER DEPTH	TEXT	FONT	LOCATION	COUNT

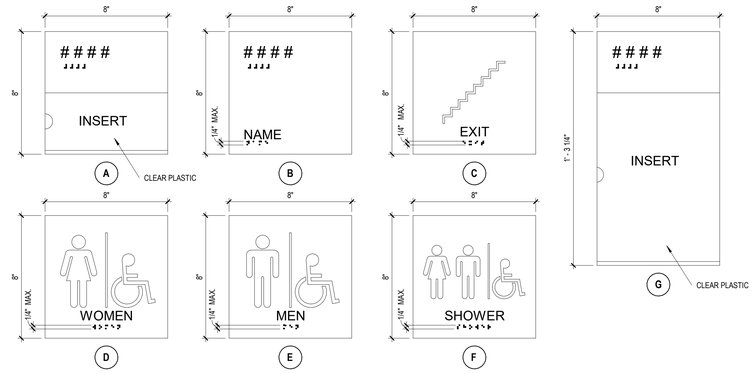

SIGNAGE TYPES

3" = 1'-0"

JRA architects
3225 Summit Square Place, Suite 200
Lexington, Kentucky 40509
859.252.6781

NOT FOR CONSTRUCTION

RESERVED FOR AHJ STAMP

RFP 2 DRAWINGS

UK INDOOR TRACK FACILITY

UNIVERSITY OF KENTUCKY
700 SPORTS CENTER DRIVE LEXINGTON, KENTUCKY 40506

ARCHITECTURAL

PROJECT	202258
DATE	08/31/2022

REVISIONS

No.	Description	Date

JRA ARCHITECTS HAS RETAINED AN ELECTRONIC VERSION OF THEIR DRAWINGS. THE CLIENT AGREES NOT TO REUSE THESE DRAWINGS - IN ELECTRONIC OR ANY OTHER FORMAT - IN WHOLE, OR IN PART, FOR ANY PURPOSE OTHER THAN FOR THE PROJECT. THE CLIENT AGREES NOT TO TRANSFER THESE ELECTRONIC FILES TO OTHERS WITHOUT THE PRIOR WRITTEN CONSENT OF THE ARCHITECT. THE CLIENT FURTHER AGREES TO WAIVE ALL CLAIMS AGAINST THE ARCHITECT RESULTING IN ANY WAY FROM ANY CHANGES OR ADDITIONS TO OR REUSE OF THE ELECTRONIC FILES FOR ANY OTHER PROJECT BY ANYONE OTHER THAN THE ARCHITECT.

SIGNAGE SCHEDULE

A-631

COPYRIGHT 2022 - JRA, INC.

9/2/2022 3:24:50 PM

C:\Users\lburnett\OneDrive - JRA Architects\Documents\202258 - UK Indoor Track_lburnettNA4L5.rvt

PARTITION TYPE SCHEDULE

MARK	TYPE DRAWING	STRUCT. SIZE	TOTAL WIDTH	GYP. BD. TERMINATION	INSULATION	STC RATING	FIRE RATING (HOUR)	UL DESIGN
94A	1	3 5/8"	4 7/8"	4" ABOVE CLG.	--	--	--	--
94F	2	3 5/8"	4 1/4"	4" ABOVE CLG.	--	--	--	--
94G2	3	3 5/8"	6 1/8"	TO DECK ABOVE	--	--	2	U419
96A	1	6"	7 1/4"	4" ABOVE CLG.	--	--	--	--
96B	1	6"	7 1/4"	TO DECK ABOVE	--	--	--	--
96C	1	6"	7 1/4"	TO DECK ABOVE	5" SAB	55	--	--
96F	2	6"	6 5/8"	4" ABOVE CLG.	--	--	--	--
98B	1	6"	9 1/4"	TO DECK ABOVE	--	--	--	--
98G2	3	8"	10 1/2"	TO DECK ABOVE	--	--	2	U419

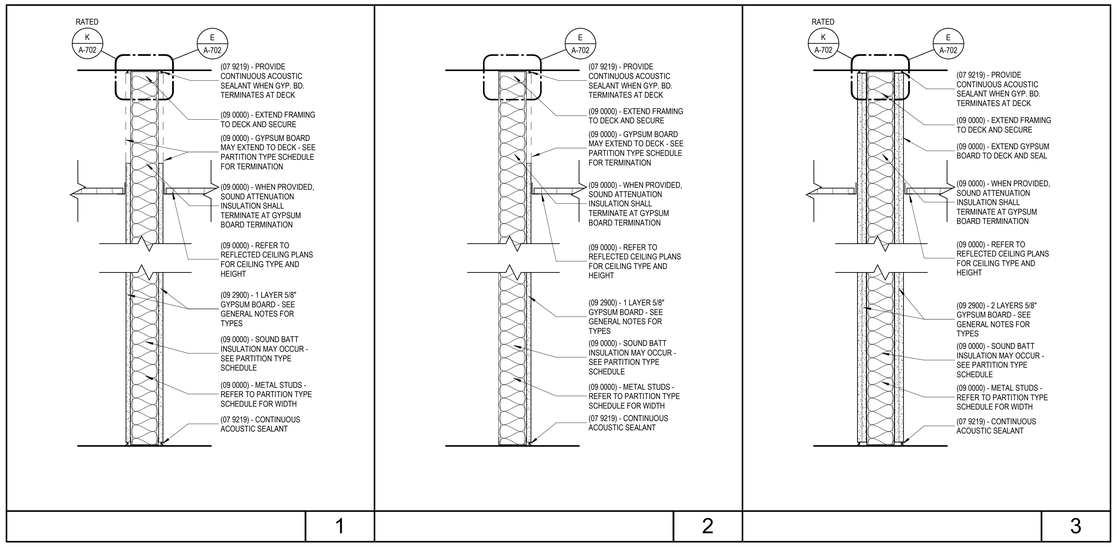

PARTITION TYPE DRAWINGS

1 1/2" = 1'-0"

JRA architects
3225 Summit Square Place, Suite 200
Lexington, Kentucky 40509
859.252.6781

NOT FOR CONSTRUCTION

RESERVED FOR AHJ STAMP

RFP 2 DRAWINGS

UK INDOOR TRACK FACILITY

UNIVERSITY OF KENTUCKY
700 SPORTS CENTER DRIVE LEXINGTON, KENTUCKY 40506

ARCHITECTURAL

PROJECT	202258
DATE	08/31/2022

REVISIONS

No.	Description	Date

JRA ARCHITECTS HAS RETAINED AN ELECTRONIC VERSION OF THESE DRAWINGS. THE CLIENT AGREES NOT TO REUSE THESE DRAWINGS - IN ELECTRONIC OR ANY OTHER FORMAT - IN WHOLE, OR IN PART, FOR ANY PURPOSE OTHER THAN FOR THE PROJECT. THE CLIENT AGREES NOT TO TRANSFER THESE ELECTRONIC FILES TO OTHERS WITHOUT THE PRIOR WRITTEN CONSENT OF THE ARCHITECT. THE CLIENT FURTHER AGREES TO WAIVE ALL CLAIMS AGAINST THE ARCHITECT RESULTING IN ANY WAY FROM ANY CHANGES OR ADDITIONS TO OR REUSE OF THE ELECTRONIC FILES FOR ANY OTHER PROJECT BY ANYONE OTHER THAN THE ARCHITECT.

PARTITION TYPE SCHEDULE AND DETAILS

A-701

COPYRIGHT 2022 - JRA, INC.

9/2/2022 3:24:51 PM

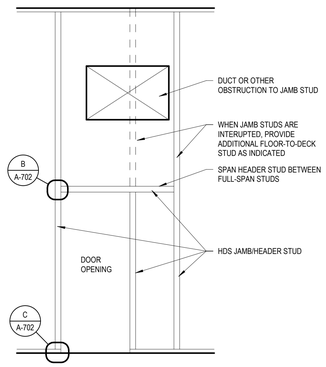

A FRAMING AT JAMB STUD INTERRUPTION
3/8" = 1'-0"

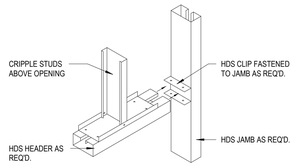

B HDS HEADER FRAMING
1/2" = 1'-0"

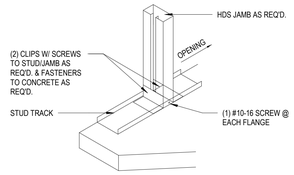

C HDS JAMB FRAMING
1/2" = 1'-0"

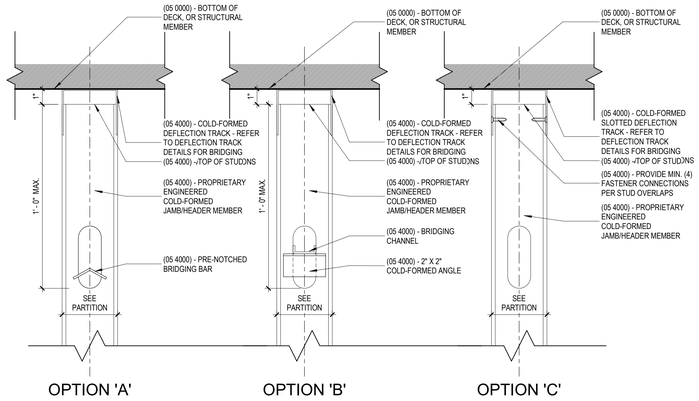

D NON-RATED DEFLECTION TRACK DETAILS - EXTERIOR
3" = 1'-0"

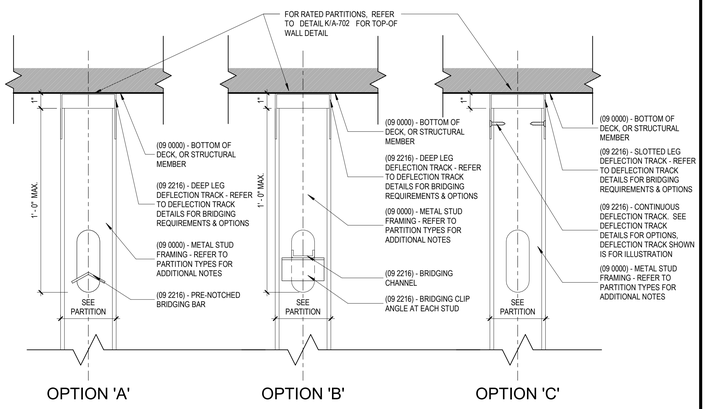

E NON-RATED DEFLECTION TRACK DETAILS - INTERIOR
3" = 1'-0"

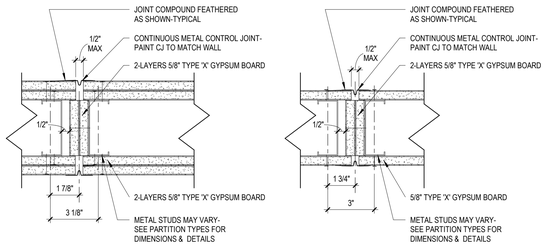

2-HOUR RATED JOINT (WHI-651-0318.1, 3-20-90)

1-HOUR RATED JOINT (WHI-647-3024, 9-20-90)

G RATED CONTROL JOINT DETAILS
3" = 1'-0"

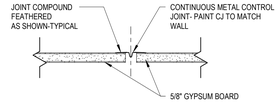

J NON-RATED GYPSUM CONTROL JOINT DETAIL
3" = 1'-0"

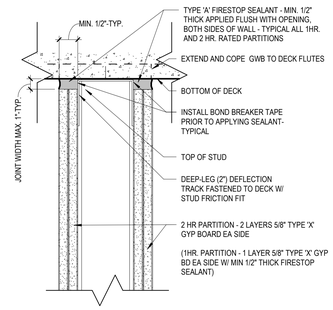

UL DESIGN-HW-D-0158

K PARTITION DTL-HEAD OF WALL @ RATED PART.
3" = 1'-0"

PRIORITY OF PARTITIONS:

THE PRIORITY OF PARTITIONS OF DIFFERENT TYPES IS DETERMINED AS FOLLOWS:

1. RATED PARTITIONS HAVE PRIORITY OVER NON-RATED PARTITIONS.

2. PARTITIONS WITH GREATER RATINGS HAVE PRIORITY OVER PARTITIONS WITH LESSER RATINGS. (EX: 2-HOUR RATED PARTITIONS HAVE PRIORITY OVER 1-HOUR RATED PARTITIONS)

3. SMOKE RATED PARTITIONS HAVE PRIORITY OVER NON-SMOKE SEALED PARTITIONS.

4. FIRE-RATED PARTITIONS (1-HOUR, 2-HOUR, ETC.) HAVE PRIORITY OVER SMOKE RATED PARTITIONS.

5. RATED PARTITIONS HAVE PRIORITY OVER FRAMED EXTERIOR WALLS (WOOD & METAL STUDS) AND MUST EXTEND TO THE EXTERIOR SHEATHING TO PREVENT PASSAGE OF FIRE THROUGH THE CAVITY. THIS ALSO APPLIED TO HORIZONTAL SHAFT TOPS AND BOTTOMS AT FRAMED EXTERIOR WALLS.

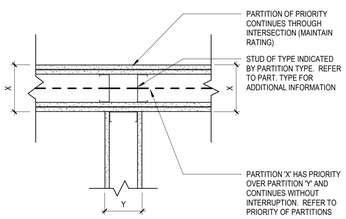

THREE-WAY INTERSECTION (T-SHAPE)

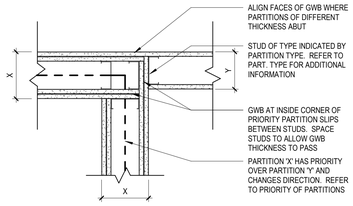

THREE-WAY INTERSECTION (L-SHAPE)

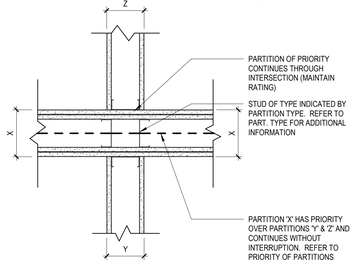

FOUR-WAY INTERSECTION (T-SHAPE)

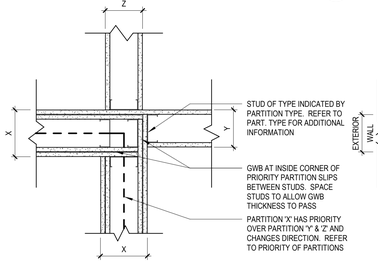

FOUR-WAY INTERSECTION (L-SHAPE)

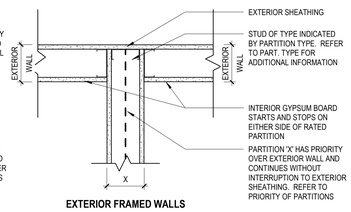

EXTERIOR FRAMED WALLS

L PRIORITY OF PARTITIONS
1 1/2" = 1'-0"

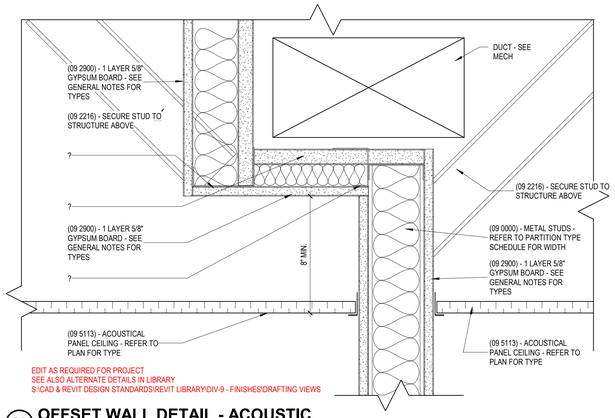

NOTE: REFER TO MEP DRAWINGS. PROVIDE OFFSETS IN PARTITIONS WHERE DUCTS, PIPES, CONDUITS, ETC. RUN PARALLEL DIRECTLY ABOVE WALLS TO PROVIDE CONTINUITY OF FRAMING, ACOUSTIC RATING, OR FIRE RATING. ACTUAL CONDITIONS MAY VARY - CONSULT ARCHITECT FOR DETAIL SPECIFIC TO FIELD CONDITIONS.

M OFFSET WALL DETAIL - ACOUSTIC
3" = 1'-0"

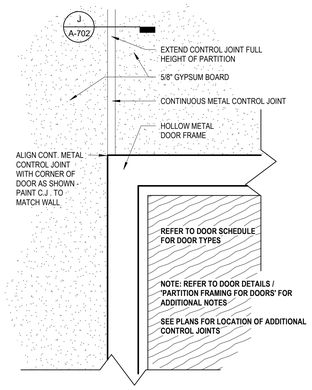

N PARTITION DETAIL-CONTROL JT @ DOOR FR.
3" = 1'-0"

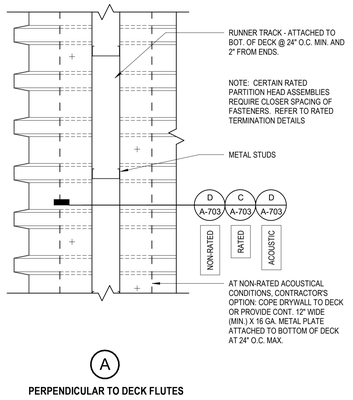

A

PERPENDICULAR TO DECK FLUTES

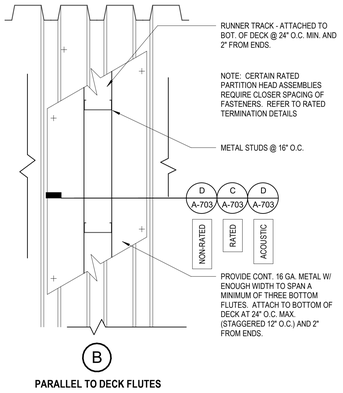

B

PARALLEL TO DECK FLUTES

P METAL STUD FRAMING R.C.P.
1 1/2" = 1'-0"

JRA architects
3225 Summit Square Place, Suite 200
Lexington, Kentucky 40509
859.252.6781

NOT FOR CONSTRUCTION

RESERVED FOR AHJ STAMP

RFP 2 DRAWINGS

UK INDOOR TRACK FACILITY

UNIVERSITY OF KENTUCKY
700 SPORTS CENTER DRIVE LEXINGTON, KENTUCKY 40506

ARCHITECTURAL

PROJECT	202258
DATE	08/31/2022

REVISIONS

No.	Description	Date

JRA ARCHITECTS HAS RETAINED AN ELECTRONIC VERSION OF THESE DRAWINGS. THE CLIENT AGREES NOT TO REUSE THESE DRAWINGS - IN ELECTRONIC OR ANY OTHER FORMAT - IN WHOLE, OR IN PART, FOR ANY PURPOSE OTHER THAN FOR THE PROJECT. THE CLIENT AGREES NOT TO TRANSFER THESE ELECTRONIC FILES TO OTHERS WITHOUT THE PRIOR WRITTEN CONSENT OF THE ARCHITECT. THE CLIENT FURTHER AGREES TO WAIVE ALL CLAIMS AGAINST THE ARCHITECT RESULTING IN ANY WAY FROM ANY CHANGES OR ADDITIONS TO OR REUSE OF THE ELECTRONIC FILES FOR ANY OTHER PROJECT BY ANYONE OTHER THAN THE ARCHITECT.

TYPICAL PARTITION DETAILS

A-702

COPYRIGHT 2022 - JRA, INC.

C:\Users\lburnett\OneDrive - JRA Architects\Documents\202258 - UK Indoor Track_lburnettNAL5.rvt
9/2/2022 3:24:53 PM

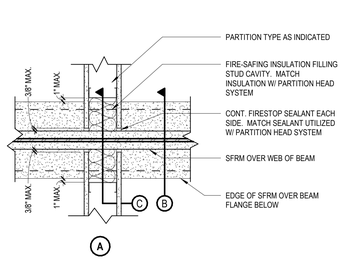

PLAN SECTION THRU BEAM

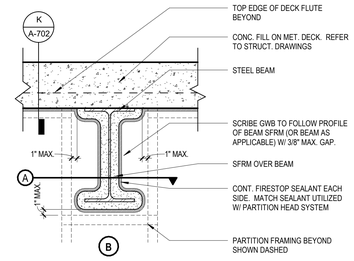

ELEVATION - LOOKING TOWARD PARTITION

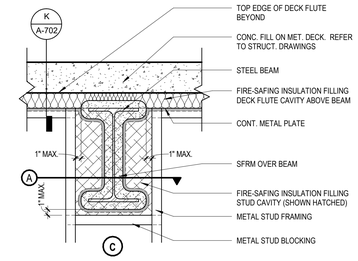

SECTION

A RATED PARTITION PERPENDICULAR TO BEAM
1 1/2" = 1'-0"

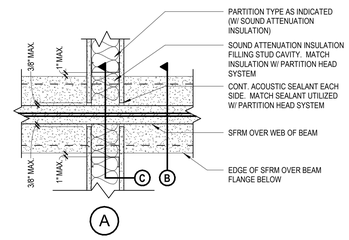

PLAN SECTION THRU BEAM

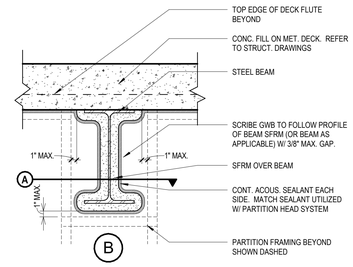

ELEVATION - LOOKING TOWARD PARTITION

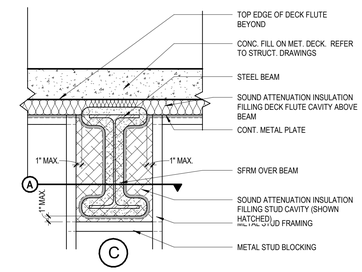

SECTION

B NON-RATED PARTITION ACOUSTIC PARTITION PERPENDICULAR TO BEAM
1 1/2" = 1'-0"

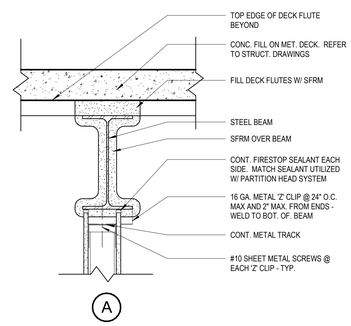

BELOW BEAM W/ EQUAL OR GREATER RATING

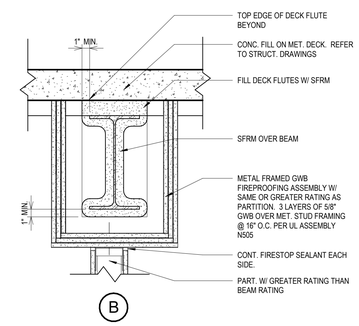

BELOW BEAM W/ LESSER RATING

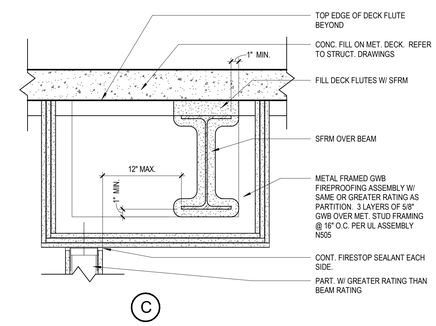

BELOW BEAM & WITHIN 12" OF BEAM W/ LESSER RATING

C TYPICAL RATED PARTITION HEAD DETAILS
1 1/2" = 1'-0"

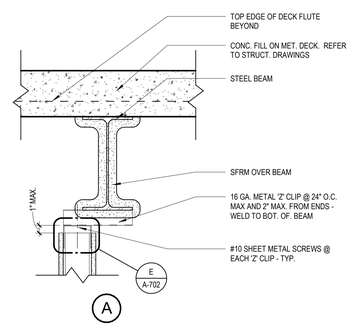

UNDER BEAM

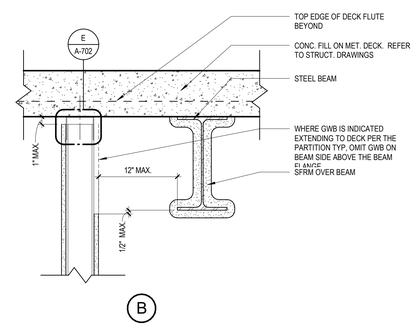

ADJACENT TO BEAM (NON-ACOUSTIC)

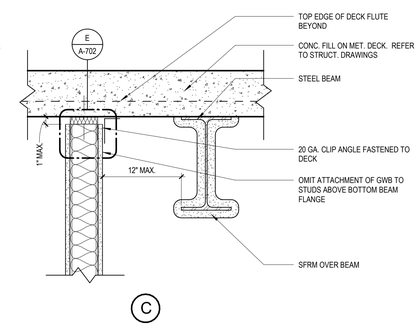

ADJACENT TO BEAM (ACOUSTIC)

D TYPICAL NON-RATED PARTITION HEAD DETAILS
1 1/2" = 1'-0"

JRA architects
3225 Summit Square Place, Suite 200
Lexington, Kentucky 40509
859.252.6781

NOT FOR CONSTRUCTION

RESERVED FOR AHJ STAMP

RFP 2 DRAWINGS

UK INDOOR TRACK FACILITY
UNIVERSITY OF KENTUCKY
700 SPORTS CENTER DRIVE LEXINGTON, KENTUCKY 40506

ARCHITECTURAL

PROJECT	202258
DATE	08/31/2022

REVISIONS

No.	Description	Date

JRA ARCHITECTS HAS RETAINED AN ELECTRONIC VERSION OF THESE DRAWINGS. THE CLIENT AGREES NOT TO REUSE THESE DRAWINGS - IN ELECTRONIC OR ANY OTHER FORMAT - IN WHOLE, OR IN PART, FOR ANY PURPOSE OTHER THAN FOR THE PROJECT. THE CLIENT AGREES NOT TO TRANSFER THESE ELECTRONIC FILES TO OTHERS WITHOUT THE PRIOR WRITTEN CONSENT OF THE ARCHITECT. THE CLIENT FURTHER AGREES TO WAIVE ALL CLAIMS AGAINST THE ARCHITECT RESULTING IN ANY WAY FROM ANY UNAUTHORIZED CHANGES TO OR REUSE OF THE ELECTRONIC FILES FOR ANY OTHER PROJECT BY ANYONE OTHER THAN THE ARCHITECT.

TYPICAL PARTITION DETAILS

A-703

COPYRIGHT 2022 - JRA, INC.

C:\Users\lburnett\OneDrive - JRA Architects\Documents\202258 - UK Indoor Track_lburnettNA4L5.rvt

9/2/2022 3:24:54 PM

C:\Users\jhardmann\Desktop\202258 - UK Indoor Track_detached.rvt

LAYOUT NOTES:

1. Elevated Structure, 200m Oval, Radius to ML = 68'-10 3/4", 6 x 42" Wide Lanes, as per Details ?/TF-? and ?/TF-?
2. Elevated Structure, Long/Triple Jump Runway & Sand Pit, as per Detail ?/TF-? and ?/TF-?
3. Elevated Structure, Pole Vault Runway and Landing Pad, as per Details ?/TF-? and ?/TF-?
4. 60m Sprint Lanes, 8 x 48" Wide Lanes
5. Finish Line
6. High Jump Area, No Painted Lines and Movable Landing Pad
7. Pole Vault Box Firmly Attached to Elevated Runway
8. Long/Triple Jump Take-off Boards, as per Detail ?/TF-?
9. Sprint Lanes Ramp Up To Oval
10. ComBox for Power and Future Track Timing Cables, as per Details ?/TF-? and ?/TF-?
11. Shot Put and Weight Throw Area
12. Shot Put and Weight Recessed Circle and Toe Board, as per Details ?/TF-? and ?/TF-? and ?/TF-?
13. Discus Recessed Circle, as per Details ?/TF-? and ?/TF-?
14. Jogging Lane, 5' Wide, 250m Long
15. Wicket Lane for Training Hurdles, 60m Long
16. Crash Pads, as per Detail ?/TF-?
17. Chain Link Fence
18. Water Supply
19. Removable Track Section, Approx. 10' Wide

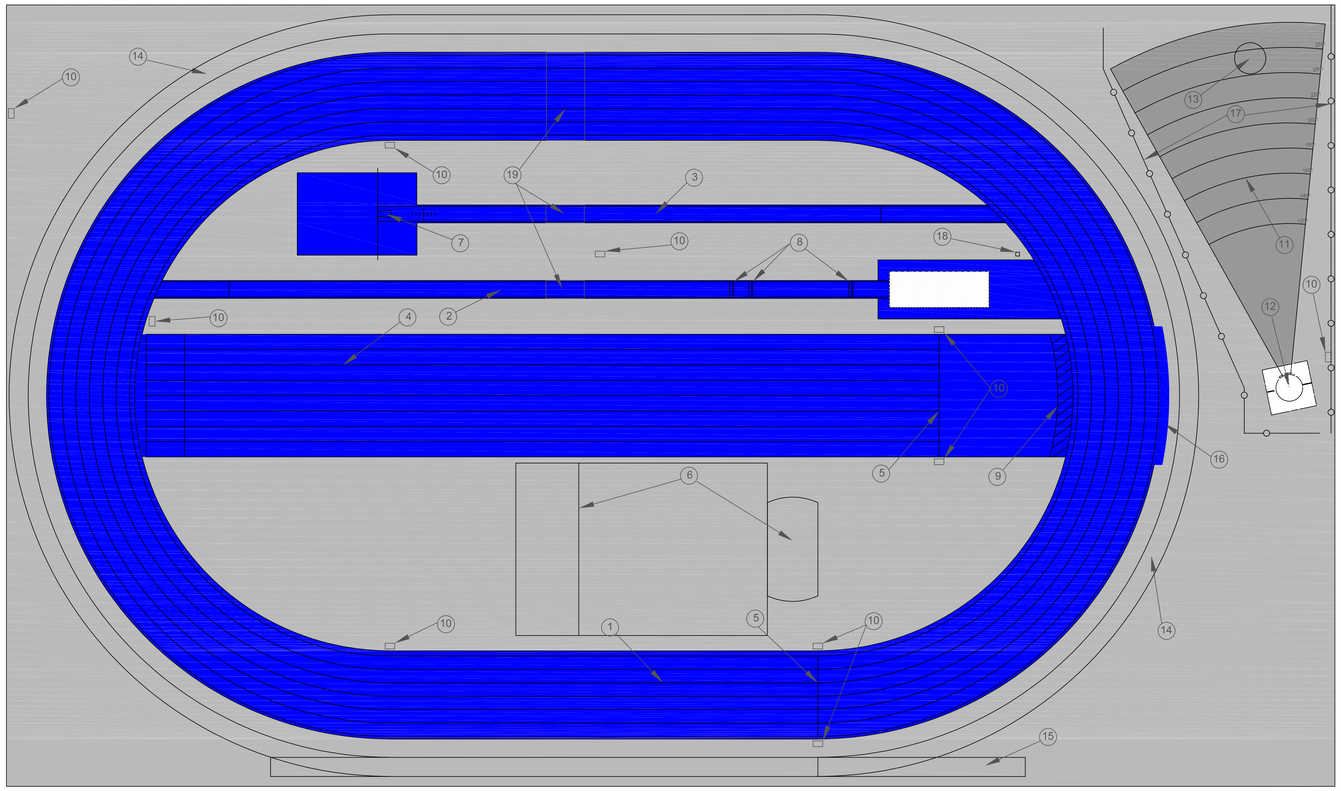

SURFACE LEGEND:

- Royal Blue Synthetic Surface
- Medium Gray Synthetic Surface
- Dark Gray Synthetic Surface
- Chain Link Fence
- Chain Link Fence

T&F LAYOUT PLAN

KEY PLAN

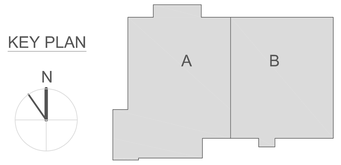

8/29/2022 1:16:25 PM

JRA architects
3225 Summit Square Place, Suite 200
Lexington, Kentucky 40509
859.252.6781

NOT FOR CONSTRUCTION

RESERVED FOR AHJ STAMP

RFP 2 DRAWINGS

UK INDOOR TRACK FACILITY

UNIVERSITY OF KENTUCKY
700 SPORTS CENTER DRIVE LEXINGTON, KENTUCKY 40506

ARCHITECTURAL

PROJECT	202258
DATE	08/31/2022

REVISIONS

No.	Description	Date

JRA ARCHITECTS HAS RETAINED AN ELECTRONIC VERSION OF THESE DRAWINGS. THE CLIENT AGREES NOT TO REUSE THESE DRAWINGS - IN ELECTRONIC OR ANY OTHER FORMAT - IN WHOLE, OR IN PART, FOR ANY PURPOSE OTHER THAN FOR THE PROJECT. THE CLIENT AGREES NOT TO TRANSFER THESE ELECTRONIC FILES TO OTHERS WITHOUT THE PRIOR WRITTEN CONSENT OF THE ARCHITECT. THE CLIENT AGREES TO HOLD HARMLESS THE ARCHITECT AGAINST THE ARCHITECT RESULTING IN ANY WAY FROM ANY UNAUTHORIZED CHANGES TO OR REUSE OF THE ELECTRONIC FILES FOR ANY OTHER PROJECT BY ANYONE OTHER THAN THE ARCHITECT.

LAYOUT PLAN

TF-101

COPYRIGHT 2022 - JRA, INC.

C:\Users\hardman\Desktop\202258 - UK Indoor Track_detached.rvt

DIMENSION NOTES:

1. Long/Triple Jump Sand Pit Dimensions are to Center Leading Edge of Sand Pit
2. Pole Vault Box Dimensions are to Center of the Back Edge of Vault Box
3. Radius Point Dimensions are to Center of the Point
4. Throwing Circle Dimensions are to Center of Circle
5. All Angles are to Radial & Center Lines
6. Refer to TF-1 Layout Plan for Proposed Surfaces and Additional Call Outs

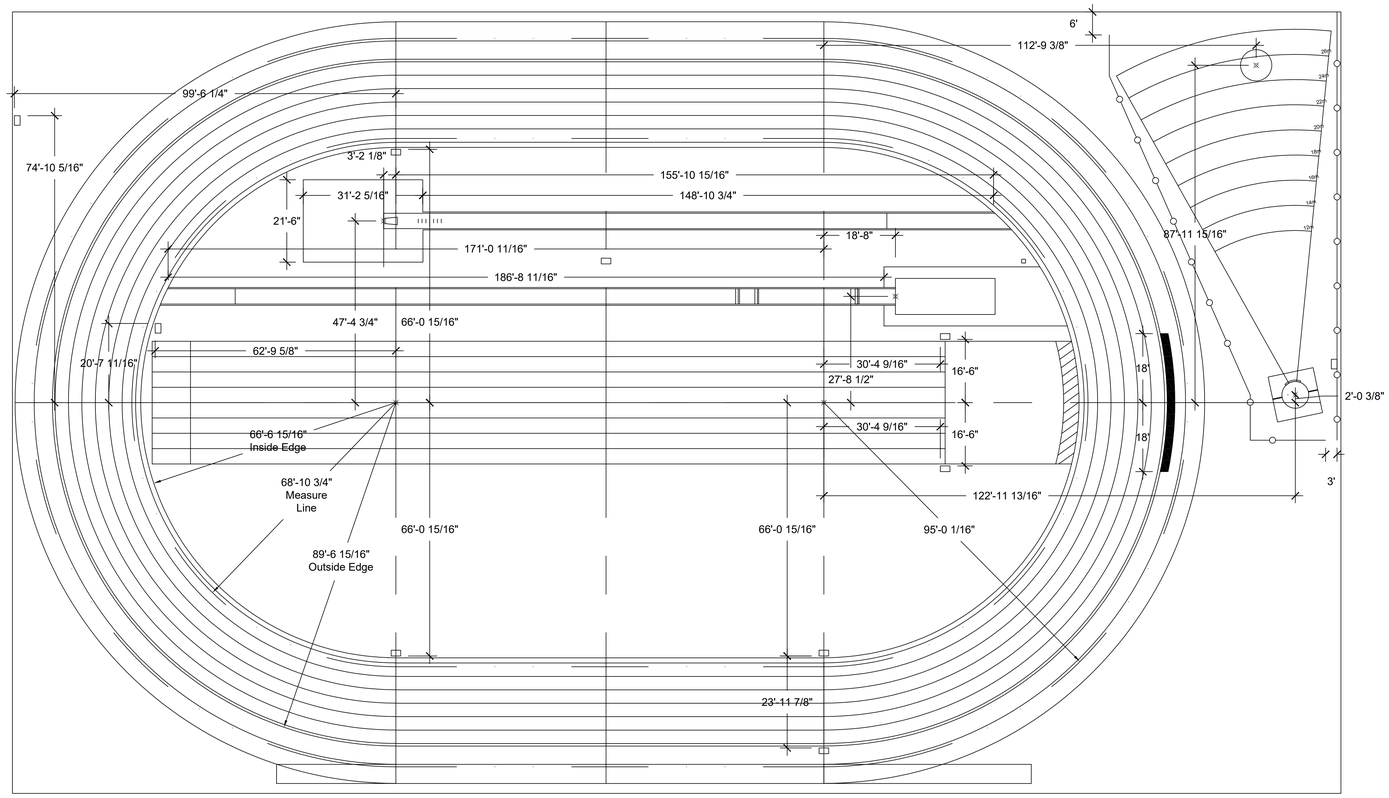

T&F DIMENSION PLAN

KEY PLAN

JRA architects
3225 Summit Square Place, Suite 200
Lexington, Kentucky 40509
859.252.6781

NOT FOR CONSTRUCTION

RESERVED FOR AHJ STAMP

RFP 2 DRAWINGS

UK INDOOR TRACK FACILITY

UNIVERSITY OF KENTUCKY
700 SPORTS CENTER DRIVE LEXINGTON, KENTUCKY 40506

ARCHITECTURAL

PROJECT	202258
DATE	08/31/2022

REVISIONS

No.	Description	Date

JRA ARCHITECTS HAS RETAINED AN ELECTRONIC VERSION OF THESE DRAWINGS. THE CLIENT AGREES NOT TO REUSE THESE DRAWINGS - IN ELECTRONIC FORM OR PLOTTED FORM, IN WHOLE OR IN PART, FOR ANY PURPOSE OTHER THAN FOR THE PROJECT. THE CLIENT AGREES NOT TO TRANSFER THESE ELECTRONIC FILES TO OTHERS WITHOUT THE PRIOR WRITTEN CONSENT OF THE ARCHITECT. THE CLIENT FURTHER AGREES TO WAIVE ALL CLAIMS AGAINST THE ARCHITECT RESULTING IN ANY WAY FROM ANY UNAUTHORIZED CHANGES TO OR REUSE OF THE ELECTRONIC FILES FOR ANY OTHER PROJECT BY ANYONE OTHER THAN THE ARCHITECT.

DIMENSION PLAN

TF-102

COPYRIGHT 2022 - JRA, INC.

8/26/2022 1:18:25 PM

C:\Users\hardman\Desktop\202258 - UK Indoor Track_detached.rvt

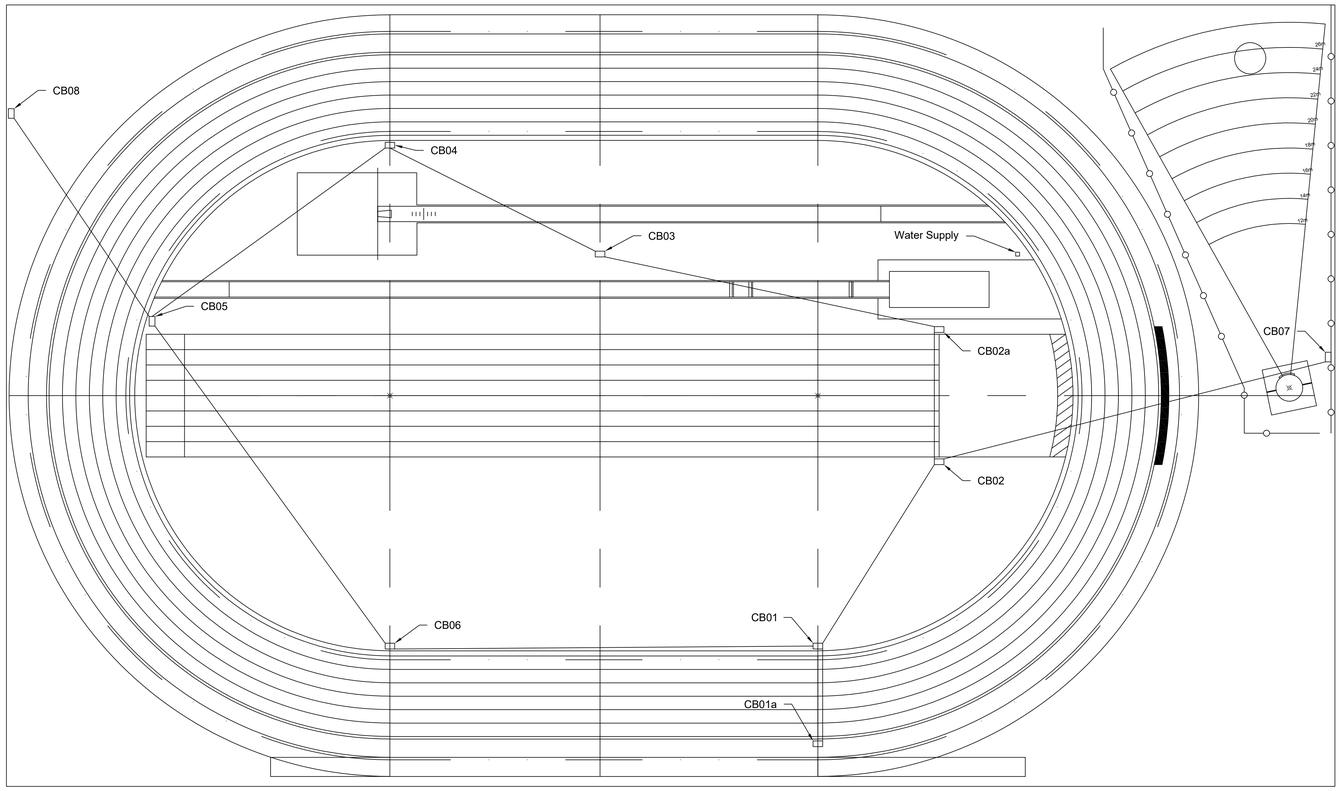

DRAFT UTILITY PLAN

COMMUNICATION BOXES FOR POWER:

CB01:	PC1, PC2, PC3
CB01a:	PC2
CB02:	PC1, PC2, PC3
CB02a:	PC2
CB03:	PC4
CB04:	PC4
CB05:	PC5
CB06:	PC5
CB07:	PC6
CB08:	PC7

NOTES:

CB = Communication Box or ComBox
PC = Power Curcuit

1. Conduit A = Connect All ComBoxes with three 4" Diameter PVC Conduits; One for Power, One for Future Data and One Spare, to be Verified by the Electrical Engineer

2. Each PC Shall have it's Own Duplex Outlet and Must be Labeled, to be Verified by the Electrical Engineer

3. Typical PC is 20 Amps, to be Verified by Electrical Engineer.

4. A Portal should be considered and be Installed into the Outside Wall of the Building for Future Use.

KEY PLAN

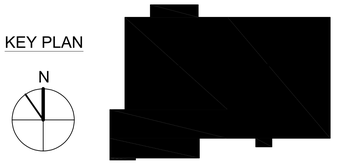

JRA architects
3225 Summit Square Place, Suite 200
Lexington, Kentucky 40509
859.252.6781

NOT FOR CONSTRUCTION

RESERVED FOR AHJ STAMP

RFP 2 DRAWINGS

UK INDOOR TRACK FACILITY
UNIVERSITY OF KENTUCKY
700 SPORTS CENTER DRIVE LEXINGTON, KENTUCKY 40506

ARCHITECTURAL

PROJECT	202258
DATE	08/31/2022

REVISIONS

No.	Description	Date

JRA ARCHITECTS HAS RETAINED AN ELECTRONIC VERSION OF THESE DRAWINGS. THE CLIENT AGREES NOT TO REUSE THESE DRAWINGS - IN ELECTRONIC OR ANY OTHER FORMAT - IN WHOLE, OR IN PART, FOR ANY PURPOSE OTHER THAN FOR THE PROJECT. THE CLIENT AGREES NOT TO TRANSFER THESE ELECTRONIC FILES TO OTHERS WITHOUT THE PRIOR WRITTEN CONSENT OF JRA ARCHITECTS. THE CLIENT FURTHER AGREES TO WAIVE ALL CLAIMS AGAINST THE ARCHITECT RESULTING IN ANY WAY FROM ANY UNAUTHORIZED CHANGES TO OR REUSE OF THE ELECTRONIC FILES FOR ANY OTHER PROJECT BY ANYONE OTHER THAN THE ARCHITECT.

DRAFT UTILITIES

TF-103

COPYRIGHT 2022 - JRA, INC.

8/26/2022 1:16:25 PM

C:\Users\hardman\Desktop\202258 - UK Indoor Track_detached.rvt

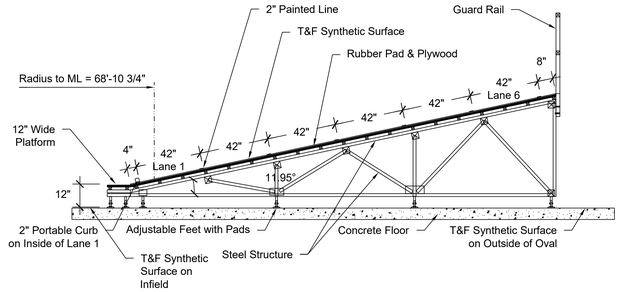

ELEVATED BANKED TURN AT GUARD RAIL

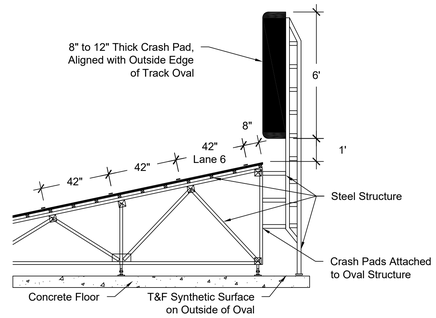

ELEVATED BANKED TURN AT CRASH PADS

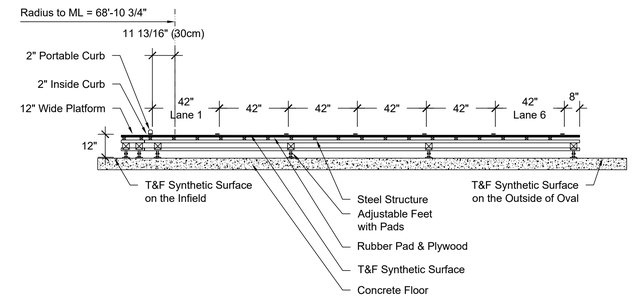

ELEVATED STRAIGHT ON OVAL

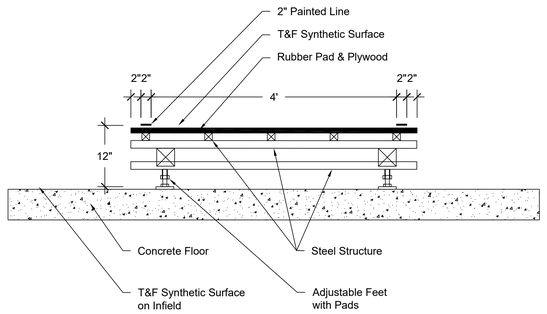

ELEVATED RUNWAY AT POLE VAULT & LONG/TRIPLE JUMP

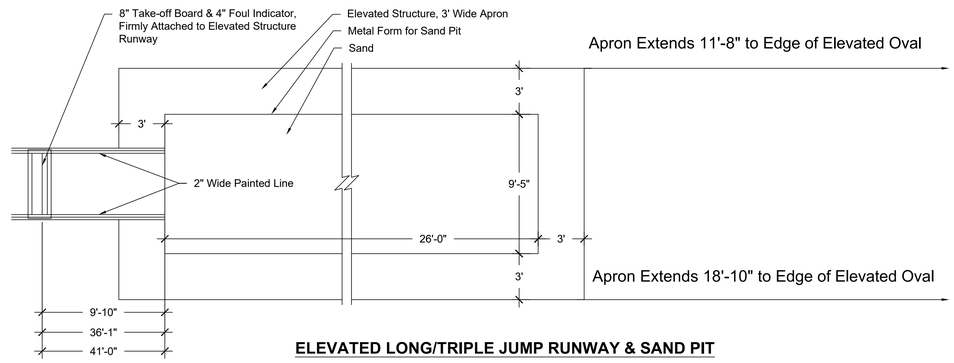

ELEVATED LONG/TRIPLE JUMP RUNWAY & SAND PIT

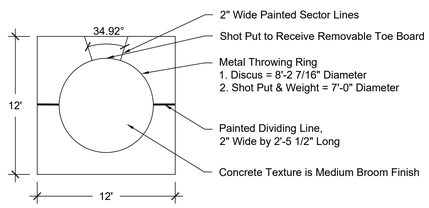

SHOT PUT, WEIGHT & DISCUS CIRCLE

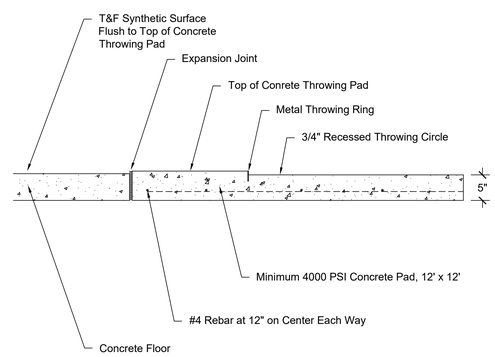

SHOT PUT & WEIGHT CIRCLE RECESSED

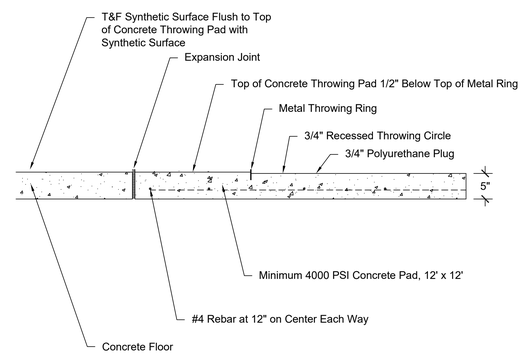

DISCUS CIRCLE RECESSED

KEY PLAN

JRA architects
3225 Summit Square Place, Suite 200
Lexington, Kentucky 40509
859.252.6781

NOT FOR CONSTRUCTION

RESERVED FOR AHJ STAMP

RFP 2 DRAWINGS

UK INDOOR TRACK FACILITY

UNIVERSITY OF KENTUCKY
700 SPORTS CENTER DRIVE LEXINGTON, KENTUCKY 40506

ARCHITECTURAL

PROJECT	202258
DATE	08/31/2022

REVISIONS

No.	Description	Date

JRA ARCHITECTS HAS RETAINED AN ELECTRONIC VERSION OF THESE DRAWINGS. THE CLIENT AGREES NOT TO REUSE THESE DRAWINGS - IN ELECTRONIC OR ANY OTHER FORMAT - IN WHOLE, OR IN PART, FOR ANY PURPOSE OTHER THAN FOR THE PROJECT. THE CLIENT AGREES NOT TO TRANSFER THESE ELECTRONIC FILES TO OTHERS WITHOUT THE PRIOR WRITTEN CONSENT OF THE ARCHITECT. THE CLIENT FURTHER AGREES TO THE FULLEST EXTENT AGAINST THE ARCHITECT WAIVING ANY WAY FROM ANY UNAUTHORIZED CHANGES TO OR REUSE OF THE ELECTRONIC FILES FOR ANY OTHER PROJECT BY ANYONE OTHER THAN THE ARCHITECT.

T&F DETAILS

TF-104

COPYRIGHT 2022 - JRA, INC.

8/26/2022 1:16:25 PM

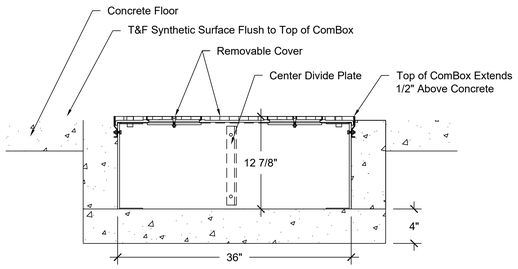

COMMUNICATION BOX (ComBox or CB)

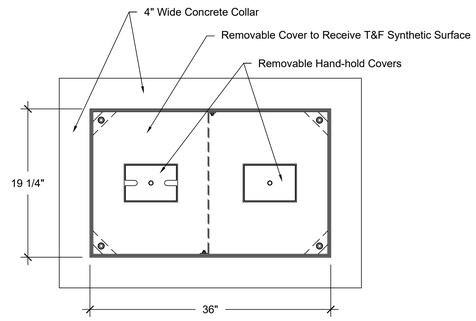

COMMUNICATION BOX (ComBox or CB)

KEY PLAN

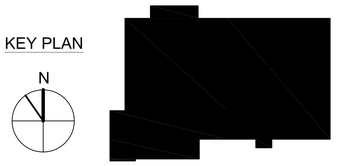

JRA architects
3225 Summit Square Place, Suite 200
Lexington, Kentucky 40509
859.252.6781

NOT FOR CONSTRUCTION

RESERVED FOR AHJ STAMP

RFP 2 DRAWINGS

UK INDOOR TRACK FACILITY
UNIVERSITY OF KENTUCKY
700 SPORTS CENTER DRIVE LEXINGTON, KENTUCKY 40506

ARCHITECTURAL

PROJECT	202258
DATE	08/31/2022

REVISIONS

No.	Description	Date

JRA ARCHITECTS HAS RETAINED AN ELECTRONIC VERSION OF THESE DRAWINGS. THE CLIENT AGREES NOT TO REUSE THESE DRAWINGS - IN ELECTRONIC OR ANY OTHER FORMAT - IN WHOLE, OR IN PART, FOR ANY PURPOSE OTHER THAN FOR THE PROJECT. THE CLIENT AGREES NOT TO TRANSFER THESE ELECTRONIC FILES TO OTHERS WITHOUT THE PRIOR WRITTEN CONSENT OF THE ARCHITECT. THE CLIENT AGREES TO HOLD HARMLESS THE ARCHITECT AGAINST THE ARCHITECT RESULTING IN ANY WAY FROM ANY UNAUTHORIZED CHANGES TO OR REUSE OF THE ELECTRONIC FILES FOR ANY OTHER PROJECT BY ANYONE OTHER THAN THE ARCHITECT.

T&F DETAILS

TF-105

COPYRIGHT 2022 - JRA, INC.

C:\Users\hardman\Desktop\202258 - UK Indoor Track_detached.rvt
8/26/2022 1:16:25 PM

C:\Users\samos\Documents\XXTF22 Central File_nolanjamos.rvt

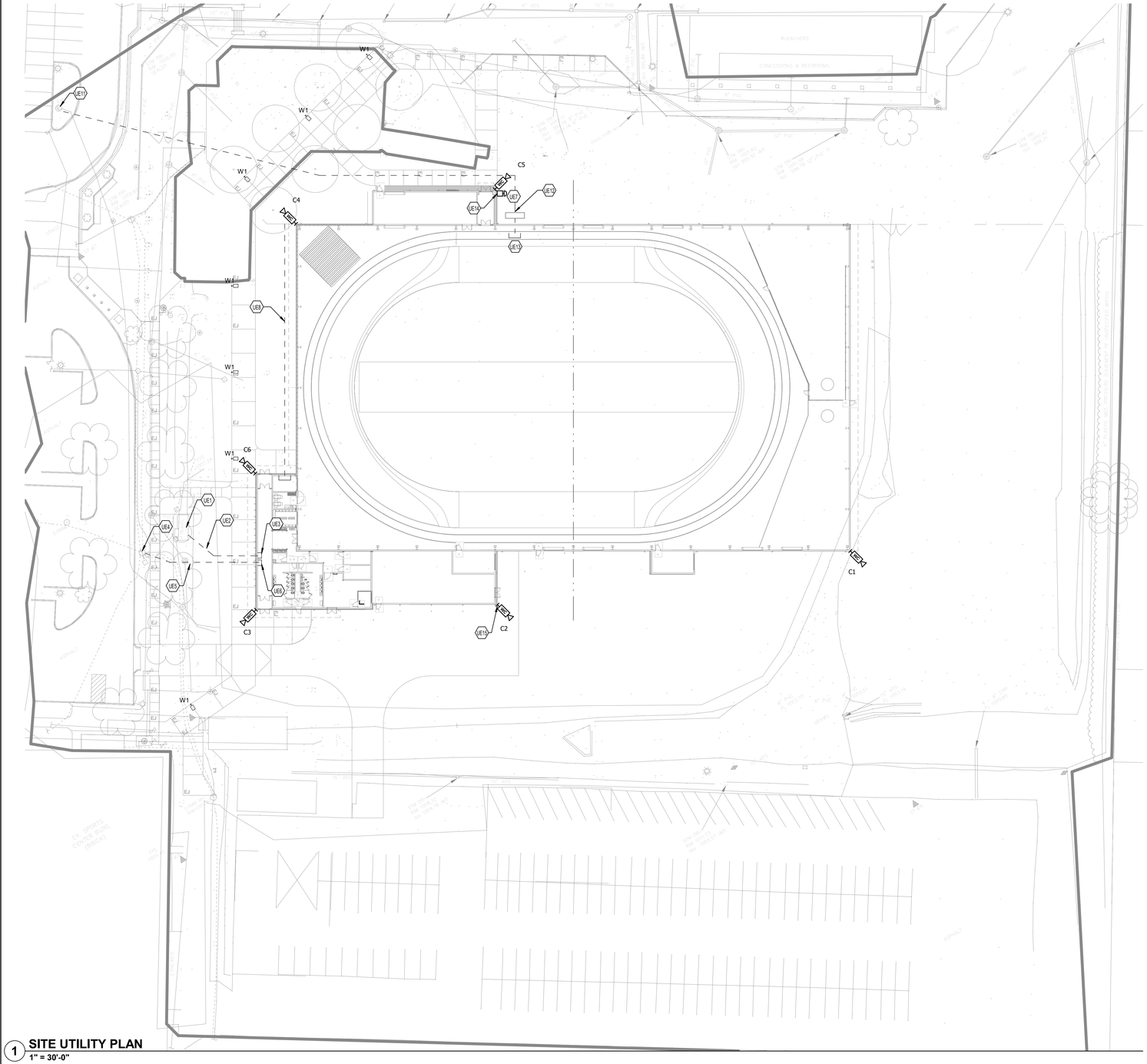

1 **SITE UTILITY PLAN**
1" = 30'-0"

ELECTRICAL SITE NOTES

A DO NOT SCALE FROM MECHANICAL AND ELECTRICAL DRAWINGS. FIELD VERIFY REQUIRED DIMENSIONS AND COORDINATE WITH CIVIL DRAWINGS AND SURVEYS.

B REFER ALSO TO ALL OTHER PLANS AND THE SPECIFICATION, BUT ESPECIALLY TO: THE SITE SURVEY, THE ARCHITECTURAL SITE PLAN, THE SITE GRADING PLAN, THE PLANTING PLAN (WHERE AVAILABLE), FOUNDATION PLAN(S), APPROPRIATE MECHANICAL & ELECTRICAL FLOOR PLANS FOR SERVICE CONTINUATIONS, THE SITE UTILITY PLAN - MECHANICAL & ELECTRICAL. WHERE THERE ARE CONFLICTS AMONG THESE PLANS AND/OR RELATED SPECIFICATIONS, ADVISE THESE ENGINEERS AT LEAST TEN DAYS PRIOR TO SUBMISSION OF BIDS.

C ALL FEES AND ANY OTHER COSTS TO UTILITY COMPANIES, MUNICIPALITIES, INSPECTORS, REVIEWING AGENCIES, ETC. ARE TO BE INCLUDED AS A PART OF THIS CONTRACT.

D FEDERAL, STATE, LOCAL, MUNICIPALITY AND UTILITY COMPANY CODES, RULES, REGULATIONS AND REQUIREMENTS APPLY UNLESS EXCEEDED BY THIS DESIGN.

E WHEN INTERRUPTION OF AN EXISTING UTILITY OR SERVICE IS PLANNED OR OCCURS ACCIDENTALLY, THE CONTRACTOR(S) SHALL WORK CONTINUOUSLY AS NEEDED TO RESTORE SAME PROVIDING PREMIUM TIME AS NEEDED AT NO INCREASE IN THE CONTRACT PRICE.

F LOCATIONS, DEPTHS, MATERIAL TYPES, ELEVATIONS, ETC. OF ALL APPURTENANCES, LINES, BUILDINGS, ETC. INDICATED ON THESE DRAWINGS WERE TAKEN FROM VARIOUS SOURCES, ARE DIAGRAMMATIC ONLY AND ARE SUBJECT TO SUBSTANTIAL VARIATION FROM EXISTING CONDITIONS, EXISTING UTILITIES LOCATIONS MAY VARY. CONSEQUENTLY ALL CONTRACTORS SHALL EXERCISE EXTREME CARE IN THE COURSE OF THEIR WORK SO AS TO ENSURE THAT THEY DO NOT INTERRUPT ANY EXISTING SERVICE. FOR SAFETY PURPOSES, PAY PARTICULAR ATTENTION TO THIS PRECAUTION RELATIVE TO NATURAL GAS AND ELECTRICAL LINES. ALL WORK SHALL BE PERFORMED IN ACCORDANCE WITH ALL FEDERAL, STATE, AND/OR LOCAL RULES, REGULATIONS, STANDARDS AND SAFETY REQUIREMENTS.

G CONTRACTOR SHALL VISIT THE SITE AND FIELD VERIFY THE ROUTING OF ALL UTILITIES NEW AND EXISTING PRIOR TO SUBMISSION OF BIDS. SUBMISSION OF A BID PROPOSAL INDICATES THAT THE CONTRACTOR IS FULLY AWARE OF ALL OBSTRUCTIONS AND WILL INSTALL ALL OF THE NEW UTILITIES WITHOUT REQUESTS FOR ANY ADDITIONAL CHANGES.

H CONTRACTOR SHALL CUT AND PATCH ALL PAVEMENT, CURBING, ETC. AS REQUIRED FOR WORK. ALL PATCH AND REPAIR WORK SHALL BE IN ACCORDANCE WITH BOTH CIVIL AND LANDSCAPE DRAWINGS AND SPECIFICATIONS.

I PLANNED INTERRUPTION OF ANY SERVICE SHALL BE COORDINATED WITH THE APPROPRIATE MUNICIPALITY OR UTILITY COMPANY, THE ARCHITECT, AND THE BUILDING OPERATORS AT LEASTE ONE WEEK IN ADVANCE OF ANTICIPATED INTERRUPTION. A SCHEDULE FOR THESE OUTAGES SHALL BE DEVELOPED AND AGREED UPON BETWEEN THE PARTIES MENTIONED TO AVOID UNNECESSARY INCONVENIENCE TO THE OWNER OR ANY AFFECTED PARTY. NOTIFY THE UTILITY COMPANY OF ANY ANTICIPATED SERVICES REQUIRED FROM THEM AT LEAST TWO WEEKS IN ADVANCE IN WRITING AND INSURE THAT THEY DO NOT DELAY WORK.

J THE LOCATIONS OF UTILITIES SHOWN WITHIN THESE DRAWINGS ARE APPROXIMATE ONLY.

K THE CONTRACTOR WILL BE RESPONSIBLE FOR ANY EXCAVATION WORK REQUIRED TO UNDERGROUND UTILITIES. THE CONTRACTOR IS ALSO REQUIRED TO NOTIFY ANY OTHER AFFECTED UTILITY OWNERS PRIOR TO DIGGING. IN THE EVENT OF ACCIDENTAL INTERRUPTION OF SERVICE, CONTRACTOR WILL IMMEDIATELY NOTIFY THE OTHER UTILITY OWNERS.

L THE CONTRACTOR WILL PROVIDE ALL NECESSARY PROTECTIVE MEASURES TO SAFEGUARD OTHER EXISTING UTILITIES FROM DAMAGE DURING CONSTRUCTION OF THIS PROJECT. IN THE EVENT THAT SPECIAL EQUIPMENT IS REQUIRED TO WORK OVER AND AROUND THE OTHER UTILITIES. THE UTILITY WILL BE REQUIRED TO FURNISH SUCH EQUIPMENT.

M THE UTILITY WILL PROVIDE STAKING DATA INCLUDING NORTHING AND EASTING DATA AS REQUIRED OR SHOWN ON DRAWINGS.

N CONTRACTOR RESPONSIBLE FOR MAINTAINING DOWNSTREAM SERVICE FROM REMOVED EQUIPMENT ON SITE. INCLUDING BUT NOT LIMITED TO SITE LIGHTING, TRANSFORMERS, ETC.

O WHEN DEMOLITION OF AN ELECTRICAL DEVICE (OR CIRCUIT) IS INDICATED ON THE DRAWINGS: THE CONTRACTOR SHALL ENSURE THAT OTHER DEVICES OR EQUIPMENT "UPSTREAM" OR "DOWNSTREAM" ON THE CIRCUITS SHALL REMAIN IN "PRE-DEMOLITION" WORKING ORDER. "LEFT-OVER" CIRCUIT BREAKERS SHALL REMAIN, BE SWITCHED TO OFF POSITION, AND BE LABELED AS SPARES IN THEIR PANELS. PROVIDE NEW TYPEWRITTEN DIRECTORIES FOR ALL PANELS AFFECTED.

P REMOVE ALL ASSOCIATED BACKBOXES, CONDUIT AND CONDUCTORS FOR DEVICES/FIXTURES/ETC. BEING REMOVED (BACK TO SOURCE), WHETHER INDICATED OR NOT (UON).

Q COORDINATE DISPOSAL OF ALL FIXTURES, DEVICES, ETC. (INDICATED FOR DEMOLITION) WITH OWNER. TURN OVER ITEMS REMOVED TO OWNER AT THEIR OPTION.

R COORDINATE WITH OTHER TRADES FOR THE REMOVAL AND/OR RELOCATION OF ELECTRICAL DEVICES AND CONNECTIONS ASSOCIATED WITH THEIR EQUIPMENT.

TAGGED NOTES

(##)

UE1 EXISTING PAD MOUNT TRANSFORMER. PROVIDE NEW SECONDARY DUCT AND NEW SERVICE CONDUCTORS. SEE ONE-LINE FOR ADDITIONAL INFORMATION.

UE2 CONCRETE ENCASED UNDERGROUND SECONDARY DUCT. SEE DETAILS AND ONE LINE DIAGRAM FOR ADDITIONAL INFORMATION.

UE3 CONTINUE UNDERGROUND SECONDARY TO MAIN SERVICE DISTRIBUTION PANEL "MDP".

UE4 EXISTING TELECOMMUNICATION MANHOLE. PROVIDE TWO (2) 4" CONDUITS TO MANHOLE TO SERVE AS SERVICE DEMARCATION.

UE5 CONCRETE ENCASED TELECOMMUNICATION DUCT BANK. DUCT TO BE TWO (2) 4" CONDUITS. SEE DETAILS FOR ADDITIONAL INFORMATION.

UE6 CONTINUE UNDERGROUND TELECOMMUNICATION DUCT TO MAIN TELECOMMUNICATION ROOM (MDF).

UE7 EXISTING EXTERIOR GENERATOR TO BE SALVAGED AND INSTALLED AND LOCATION SHOWN. PROVIDE FULL DIESEL FUEL BELLY TANK. SERVICE GENERATOR AND REPAINT WEATHERPROOF ENCLOSURE. FINISH TO BE SELECTED BY ARCHITECT.

UE8 NEW EMERGENCY POWER FEEDER. FEED TO BE 4 #1/0, #6 GROUND IN 2" CONDUIT.

UE11 EXISTING ELECTRICAL MANHOLE TO BE SPLICE POINT TO RECONNECT EXISTING EMERGENCY FEED TO RELOCATED EMERGENCY GENERATOR AND ASSOCIATED NEW FEEDER.

UE12 PROVIDE ONE (1) 1-1/4" CONDUIT FOR CONTROL NETWORK CONNECTION TO EMERGENCY GENERATOR AND ONE (1) 3/4" CONDUIT FOR POWER FEED TO BATTERY CHARGER AND JACKET HEATER.

UE13 CONTINUE GENERATOR CONTROL AND POWER FEEDERS TO MAIN ELECTRICAL ROOM.

UE14 PROVIDE EMERGENCY POWER OFF (EPO) SWITCH WITH INTERFACE TO GENERATOR. SWITCH TO BE MUSHROOM HEAD SWITCH IN WEATHERPROOF ENCLOSURE WITH PERMANENT LABEL.

UE15 CCTV CAMERA LOCATION. PROVIDE NETWORK CONNECTION IN 1" CONDUIT TO TELECOMUNICATION ROOM.

SITE UTILITIES LEGEND

	EXISTING, DEMOLITION, NEW WORK
S	SANITARY MANHOLE
	FIRE HYDRANT
	WATER VALVE
ECO D(ECO) ECO	EXTERIOR CLEANOUT
TB D(TB) TB	THRUST BLOCK
—XXX—	NEW PIPING - (XXX) DENOTES SYSTEM
- - D(XXX) - -	PIPING TO BE DEMOLISHED - (XXX) DENOTES SYSTEM
—E(XXX)—	EXISTING PIPING - (XXX) DENOTES SYSTEM
—A(XXX)—	ABANDONED IN PLACE PIPING - (XXX) DENOTES SYSTEM
—OP—	OVERHEAD PRIMARY
—OS—	OVERHEAD SECONDARY
—OSL—	OVERHEAD STREET LIGHT
—OTS—	OVERHEAD TRAFFIC SIGNAL
—OT—	OVERHEAD TELECOMMUNICATIONS
—OF—	OVERHEAD FIBER OPTIC
—OTV—	OVERHEAD CATV
—UP—	UNDERGROUND PRIMARY
—US—	UNDERGROUND SECONDARY
—USL—	UNDERGROUND STREET LIGHT
—UTS—	UNDERGROUND TRAFFIC SIGNAL
—UT—	UNDERGROUND TELECOMMUNICATIONS
—UF—	UNDERGROUND FIBER OPTIC
—UTV—	UNDERGROUND CATV
—CHW—	CHILLED WATER
—W—	DOMESTIC WATER
—HPS/R—	HIGH PRESSURE SUPPLY/R
—PD—	PUMPED DISCHARGE RETURN
—SS—	SANITARY SEWER
—STORM—	STORM

UTILITY COMPANY CONTACTS:

POWER:		
UNIVERSITY OF KENTUCKY	STEVEN HUGHES	859.257.4380
TELEPHONE:		
UNIVERSITY OF KENTUCKY	SHELBY AVEUY	859.257.7387

IT IS THE CONTRACTORS RESPONSIBILITY TO MEET ALL LOCAL ORDINANCE AND MUNICIPAL REQUIREMENTS RELATED TO UTILITY INSTALLATION, INSPECTIONS, MATERIALS, FEES, ETC.

BEFORE YOU DIG

THE CONTRACTOR AND ALL SUBCONTRACTORS SHALL CONTACT "BUD (BEFORE YOU DIG)" AT 1-800-752-6007 TO OBTAIN UNDERGROUND UTILITY LOCATIONS PRIOR TO ANY CONSTRUCTION. ANY CONTRACTOR OR SUBCONTRACTOR PERFORMING ANY TYPE OF EXCAVATION ON THIS PROJECT SHALL CALL "BUD" TO OBTAIN AN AUTHORIZATION NUMBER.

JRA architects
3225 Summit Square Place, Suite 200
Lexington, Kentucky 40509
859.252.6781

NOT FOR CONSTRUCTION

RESERVED FOR AHJ STAMP

CMTA

RFP 2 DRAWINGS

UK INDOOR TRACK FACILITY

UNIVERSITY OF KENTUCKY
LEXINGTON, KENTUCKY

ELECTRICAL

PROJECT	202258
DATE	8.31.22

REVISIONS

No.	Description	Date

JRA ARCHITECTS HAS RETAINED AN ELECTRONIC VERSION OF THESE DRAWINGS. THE CLIENT AGREES NOT TO REUSE THESE DRAWINGS - IN ELECTRONIC OR ANY OTHER FORMAT - IN WHOLE, OR IN PART, FOR ANY PURPOSE OTHER THAN FOR THE PROJECT. THE CLIENT AGREES NOT TO TRANSFER THESE ELECTRONIC FILES TO OTHERS WITHOUT THE PRIOR WRITTEN CONSENT OF THE ARCHITECT. THE CLIENT FURTHER AGREES TO WAIVE ALL CLAIMS AGAINST THE ARCHITECT RESULTING IN ANY WAY FROM ANY UNAUTHORIZED CHANGES TO OR REUSE OF THE ELECTRONIC FILES FOR ANY OTHER PROJECT BY ANYONE OTHER THAN THE ARCHITECT.

ELECTRICAL SITE UTILITY PLAN

EU-101

COPYRIGHT 2022 - JRA, INC.

8/31/2022 4:38:13 PM

C:\Users\samos\Documents\XXTF22 Central File_nolanjamos.rvt

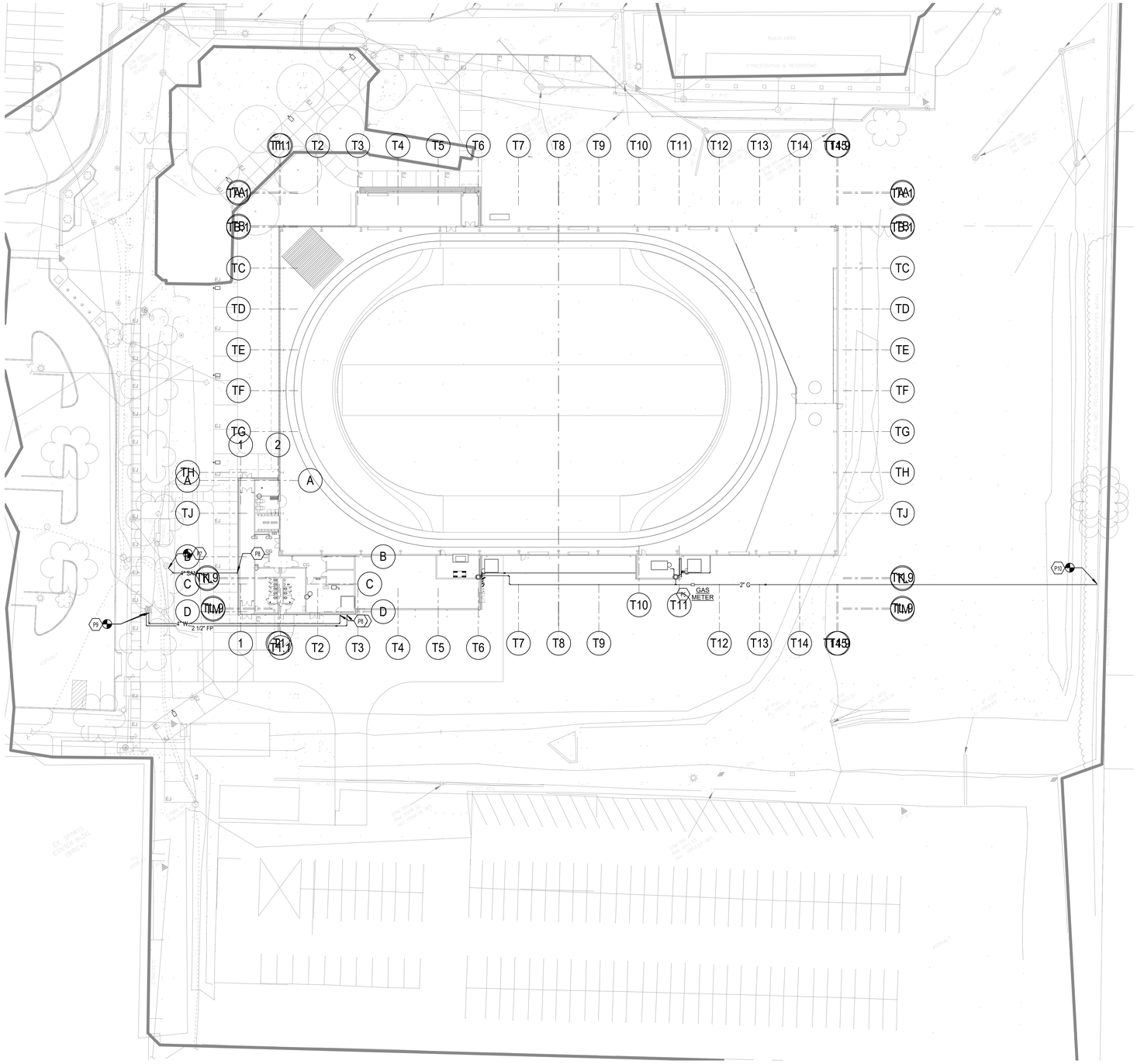

1 **SITE UTILITY PLAN**
1" = 30'-0"

MECHANICAL SITE NOTES

A DO NOT SCALE FROM MECHANICAL AND ELECTRICAL DRAWINGS. FIELD VERIFY REQUIRED DIMENSIONS.

B CONTRACTOR SHALL CUT AND PATCH ALL PAVEMENT, CURBING, etc. AS REQUIRED FOR WORK. CONTRACTOR SHALL REPAIR ALL LANDSCAPING THAT IS DAMAGED FOR WORK.

C FEDERAL, STATE, LOCAL, MUNICIPALITY AND UTILITY COMPANY CODES, RULES, REGULATIONS AND REQUIREMENTS APPLY UNLESS EXCEEDED BY THIS DESIGN.

D WHEN INTERRUPTION OF AN EXISTING UTILITY OR SERVICES IS PLANNED OR OCCURS ACCIDENTALLY, THE CONTRACTOR(S) SHALL WORK CONTINUOUSLY AS NEEDED TO RESTORE SAME PROVIDING PREMIUM TIME AS NEEDED AT NO INCREASE IN THE CONTRACT PRICE.

E PLANNED INTERRUPTION OF ANY SERVICE SHALL BE COORDINATED WITH THE APPROPRIATE MUNICIPALITY OR UTILITY COMPANY, THE ARCHITECT AND THE BUILDING OPERATORS AT LEAST ONE WEEK IN ADVANCE OF ANTICIPATED INTERRUPTION. A SCHEDULE FOR THESE OUTAGES SHALL BE DEVELOPED AND AGREED UPON BETWEEN THE PARTIES MENTIONED TO AVOID UNNECESSARY INCONVENIENCE TO THE OWNER OR ANY AFFECTED PARTY. NOTIFY THE UTILITY COMPANY OF ANY ANTICIPATED SERVICES REQUIRED FROM THEM AT LEAST TWO WEEKS IN ADVANCE IN WRITING AND INSURE THAT THEY DO NOT DELAY WORK.

F LOCATIONS, DEPTHS, MATERIAL TYPES, ELEVATIONS, ETC. OF ALL APPURTENANCES, LINES, BUILDINGS, ETC. INDICATED ON THESE DRAWINGS WERE TAKEN FROM VARIOUS SOURCES, ARE DIAGRAMMATIC ONLY AND ARE SUBJECT TO SUBSTANTIAL VARIATION FROM EXISTING CONDITIONS. EXISTING UTILITIES LOCATIONS MAY VARY (CONSEQUENTLY ALL CONTRACTORS SHALL EXERCISE EXTREME CARE IN THE COURSE OF THEIR WORK SO AS INSURE THAT THEY DO NOT INTERRUPT ANY EXISTING SERVICE. FOR SAFETY PURPOSES, PAY PARTICULAR ATTENTION TO THIS PRECAUTION RELATIVE TO NATURAL GAS AND ELECTRICAL LINES. ALL WORK SHALL BE PERFORMED IN ACCORD WITH ALL FEDERAL, STATE, AND/OR LOCAL RULES, REGULATIONS, STANDARDS AND SAFETY REQUIREMENTS. UTILITIES SHALL ALSO BE INSTALLED IN ACCORD WITH THE APPLICABLE MUNICIPALITY OR UTILITY COMPANY STANDARDS. IN ALL CASES, THE MOST STRINGENT REQUIREMENT SHALL APPLY. IF ANY VARIATION OCCURS, CONSULT THE BUILDING ENGINEER AND THE MECHANICAL ENGINEER'S REPRESENTATIVE). CONTRACTOR SHALL VISIT SITE AND FIELD VERIFY THE ROUTING OF ALL UTILITIES

G CONTRACTOR SHALL VERIFY EXACT LOCATION OF OUTDOOR RECEPTACLES WITH OWNER PRIOR TO ROUGH-IN.

H CONTRACTOR SHALL REFER TO CIVIL PLANS FOR COORDINATION WITH OTHER UTILITIES.

I COORDINATE ELEVATION AND LOCATION OF ALL CONDUITS ENTERING BUILDING WITH STRUCTURAL FOUNDATION. CONDUIT SHALL PASS THROUGH STEM WALL OF FOUNDATION OR UNDER FOOTING AS REQUIRED.

J THE LOCATIONS OF UTILITIES SHOWN WITHIN THESE DRAWINGS ARE APPROXIMATE ONLY.

K THE CONTRACTOR WILL BE RESPONSIBLE FOR ANY EXCAVATION WORK REQUIRED TO LOCATE UNDERGROUND UTILITIES. THE CONTRACTOR IS ALSO REQUIRED TO NOTIFY ANY OTHER AFFECTED UTILITY OWNERS PRIOR TO DIGGING. IN THE EVENT OF ACCIDENTAL INTERRUPTION OF SERVICE, CONTRACTOR WILL IMMEDIATELY NOTIFY THE OTHER UTILITY OWNERS.

L THE UTILITY/CONTRACTOR WILL PROVIDE ALL NECESSARY PROTECTIVE MEASURES TO SAFEGUARD OTHER EXISTING UTILITIES FROM DAMAGE DURING CONSTRUCTION OF THIS PROJECT. IN THE EVENT THAT SPECIAL EQUIPMENT IS REQUIRED TO WORK OVER AND AROUND THE OTHER UTILITIES. THE UTILITY WILL BE REQUIRED TO FURNISH SUCH EQUIPMENT

M COORDINATE UNDERGROUND ELECTRICAL WITH ALL LANDSCAPING AND FENCING, ADJUST ELECTRICAL LINES TO AVOID CONFLICTS. REFER TO LANDSCAPING PLANS FOR FURTHER INFORMATION. AVOID ROUTING UNDERGROUND CONDUITS UNDER ROADWAYS OR PARKING LOTS, CROSS ROADWAYS WITH UNDERGROUND CONDUITS AT 90 ANGLES WHERE POSSIBLE.

N IT SHALL BE THE CONTRACTORS RESPONSIBILITY TO INSURE THAT ANY ABANDONED PIPING UNCOVERED IN THE COURSE OF THEIR WORK SHALL BE CAPPED WATER TIGHT.

O TRENCHES FOR UTILITIES SHALL BE BACKFILLED PER MECHANICAL DETAILS AND SPECIFICATIONS. PAVEMENT, ASPHALT, AND OTHER SURFACE WORK SHALL BE PER CIVIL ENGINEERING DRAWINGS AND SPECIFICATIONS.

P THE CONTRACTOR SHALL ADJUST ALL EXISTING MANHOLE RINGS AND COVERS AFFECTED BY THIS PROJECT AS NECESSARY TO BE FLUSH WITH NEW GRADE.

Q CONTRACTOR SHALL COORDINATE RESPONSIBILITIES WITH CONSTRUCTION MANAGER. REFER TO SPECIFICATIONS FOR REQUIREMENTS.

R THE CONTRACTOR IS RESPONSIBLE FOR INSTALLATION AND SIZING OF ALL EXPANSION LOOPS PER PIPING MANUFACTURER'S REQUIREMENTS.

S REFER TO ARCHITECT'S PHASING PLAN FOR CONSTRUCTION PHASING REQUIREMENTS.

T ALL SITE WORK SHALL BE COORDINATED WITH UNIVERSITY OF KENTUCKY PHYSICAL PLANT DIVISION (PPD). ALL OUTAGES SHALL BE SCHEDULED A MINIMUM OF TWO WEEKS IN ADVANCE.

SITE UTILITIES LEGEND

	EXISTING, DEMOLITION, NEW WORK
S	SANITARY MANHOLE
	FIRE HYDRANT
	WATER VALVE
ECO D(ECO) ECO	EXTERIOR CLEANOUT
TB D(TB) TB	THRUST BLOCK
—XXX—	NEW PIPING - (XXX) DENOTES SYSTEM
- - D(XXX) - -	PIPING TO BE DEMOLISHED - (XXX) DENOTES SYSTEM
—E(XXX)—	EXISTING PIPING - (XXX) DENOTES SYSTEM
—A(XXX)—	ABANDONED IN PLACE PIPING - (XXX) DENOTES SYSTEM
—OP—	OVERHEAD PRIMARY
—OS—	OVERHEAD SECONDARY
—OSL—	OVERHEAD STREET LIGHT
—OTS—	OVERHEAD TRAFFIC SIGNAL
—OT—	OVERHEAD TELECOMMUNICATIONS
—OF—	OVERHEAD FIBER OPTIC
—OTV—	OVERHEAD CATV
—UP—	UNDERGROUND PRIMARY
—US—	UNDERGROUND SECONDARY
—USL—	UNDERGROUND STREET LIGHT
—UTS—	UNDERGROUND TRAFFIC SIGNAL
—UT—	UNDERGROUND TELECOMMUNICATIONS
—UF—	UNDERGROUND FIBER OPTIC
—UTV—	UNDERGROUND CATV
—CHW—	CHILLED WATER
—W—	DOMESTIC WATER
—HPS/R—	HIGH PRESSURE SUPPLY/R
—PD—	PUMPED DISCHARGE RETURN
—SS—	SANITARY SEWER
—STORM—	STORM

TAGGED NOTES

P5 COORDINATE GAS METER INSTALLATION WITH COLUMBIA GAS.
P7 CONNECT NEW SANITARY PIPE TO EXISTING SANITARY MANHOLE.
P8 REFER TO SHEET P2.0 FOR CONTINUATION.
P9 CONNECT NEW WATER LINES TO EXISTING WATER MAIN.
P10 CONNECT NEW 2" GAS LINE TO EXISTING MEDIUM PRESSURE GAS MAIN.

BEFORE YOU DIG

THE CONTRACTOR AND ALL SUBCONTRACTORS SHALL CONTACT "BUD (BEFORE YOU DIG)" AT 1-800-752-6007 TO OBTAIN UNDERGROUND UTILITY LOCATIONS PRIOR TO ANY CONSTRUCTION. ANY CONTRACTOR OR SUBCONTRACTOR PERFORMING ANY TYPE OF EXCAVATION ON THIS PROJECT SHALL CALL "BUD" TO OBTAIN AN AUTHORIZATION NUMBER.

UTILITY COMPANY CONTACTS:

POWER:		
COMPANY	FirstName LastName	### ###.####
TELEPHONE:		
COMPANY	FirstName LastName	### ###.####
WATER SEWER:		
AMERICAN WATER	TYLER SINGER	859-268-6385
GAS:		
COMPANY	FirstName LastName	### ###.####
FIRE CHIEF:		
FIRE DEPARMENT	FirstName LastName	### ###.####

IT IS THE CONTRACTORS RESPONSIBILITY TO MEET ALL LOCAL ORDINANCE AND MUNICIPAL REQUIREMENTS RELATED TO UTILITY INSTALLATION, INSPECTIONS, MATERIALS, FEES, ETC.

JRA architects
3225 Summit Square Place, Suite 200
Lexington, Kentucky 40509
859.252.6781

NOT FOR CONSTRUCTION

RESERVED FOR AHJ STAMP

CMTA

RFP 2 DRAWINGS

UK INDOOR TRACK FACILITY
UNIVERSITY OF KENTUCKY
LEXINGTON, KENTUCKY

MECHANICAL

PROJECT	202258
DATE	8.31.22

REVISIONS

No.	Description	Date

JRA ARCHITECTS HAS RETAINED AN ELECTRONIC VERSION OF THESE DRAWINGS. THE CLIENT AGREES NOT TO REUSE THESE DRAWINGS - IN ELECTRONIC OR ANY OTHER FORMAT - IN WHOLE, OR IN PART, FOR ANY PURPOSE OTHER THAN FOR THIS PROJECT. THE CLIENT AGREES NOT TO TRANSFER THESE ELECTRONIC FILES TO OTHERS WITHOUT THE PRIOR WRITTEN CONSENT OF THE ARCHITECT. THE CLIENT FURTHER AGREES TO WAIVE ALL CLAIMS AGAINST THE ARCHITECT RESULTING IN ANY WAY FROM ANY UNAUTHORIZED CHANGES TO OR REUSE OF THE ELECTRONIC FILES FOR ANY OTHER PROJECT BY ANYONE OTHER THAN THE ARCHITECT.

MECHANICAL SITE UTILITY PLAN

MU-101

COPYRIGHT 2022 - JRA, INC.

8/31/2022 4:38:14 PM

C:\Users\samos\Documents\XXETF22 Central File_nolanjamos.rvt

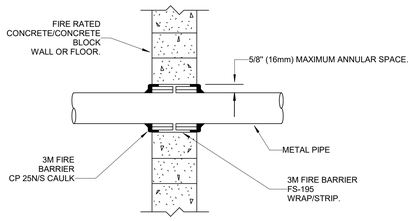

NOTES:

1. THE MAXIMUM ANNULAR SPACE AROUND THE METAL PIPE OR CONDUIT IS 5/8" (16mm). (IF THE ANNULAR SPACE EXCEEDS 5/8" PATCH THE WALL AND PENETRATE WALL AT ANOTHER LOCATION).
2. WRAP THE 3M MODEL# FS-195 WRAP/STRIP AROUND THE PIPE/CONDUIT, FOIL SIDE OUT, TO FILL THE SPACE BETWEEN THE PIPE/CONDUIT AND THE WALL OPENING. THE 3M MODEL# FS-195 WRAP/STRIP SHOULD BE TIGHTLY SECURED WITH ALUMINUM FOIL TAPE OR STEEL TIE WIRE AND PUSHED INTO THE OPENING UNTIL THE TOP EDGE OF THE WRAP IS FLUSH WITH THE WALL SURFACE. THE IDENTICAL INSTALLATION SHOULD BE INSTALLED ON THE OTHER SIDE OF THE WALL.
3. USE 3M MODEL# CP 25N/S(NO SAG) CAULK TO FILL THE AREA BETWEEN THE FS-195 WRAP/STRIP AND THE EDGES OF THE OPENING AND ANY VOIDS IN THE 3M MODEL# FS-195 WRAP/STRIP. A FILL OF CP 25 CAULK SHOULD COAT ALL EXPOSED EDGES OF THE FS-195 WRAP/STRIP AND COMPLETELY SEAL THE AREA BETWEEN THE FS-195 WRAP/STRIP, THE PIPE/CONDUIT AND THE WALL SURFACE.

PENETRATION FIRESTOP FOR METAL PIPE/CONDUIT THROUGH A CONCRETE WALL

NOT TO SCALE

FIRE STOPPING NOTES:

1. FIRE STOPPING IS CRITICAL AND MUST BE ACCOMPLISHED. ALL PIPES MUST BE FIRESTOPPED WHERE THEY PENETRATE FIRE RESISTIVE, FIRE RATED, AND SMOKE RESISTIVE WALLS OR FLOORS. ALL FLOORS CORRIDOR WALLS, STAIR WALLS, MECHANICAL ROOM WALLS, STORAGE ROOM WALLS AND OTHER HAZARDOUS ROOM WALLS ARE ONE HOUR RATED.
2. A FOUR-HOUR TRAINING SESSION SHALL BE CONDUCTED BY MANUFACTURER OF THE FIRESTOPPING MATERIAL. THIS SHALL BE DONE PRIOR TO THE INSTALLATION OF THE MATERIAL. CONTACT HOSPITAL ENGINEER AND CMTA TO ADVISE OF DATE AND TIME OF THIS MEETING.
3. ALL PENETRATIONS WILL BE REVIEWED BY THE HOSPITAL ENGINEER OR CMTA. PRIOR TO INSPECTION, ALL CEILING TILES BENEATH THE PENETRATIONS SHALL BE REMOVED BY THE CONTRACTOR.

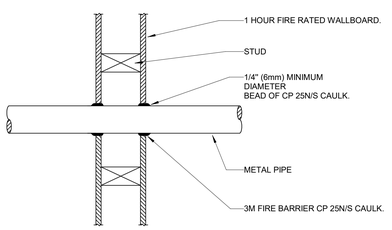

NOTES:

1. FORCE THE 3M MODEL# CP 25N/S CAULK INTO THE ANNULAR SPACE TO THE MAXIMUM EXTENT POSSIBLE, FLUSH WITH THE EXTERIOR OF THE PENETRATION SURFACE.
2. FINISH CAULKING WITH A 1/4" (6mm) MINIMUM BEAD OF CP 25N/S CAULK APPLIED TO THE PERIMETER OF THE CONDUIT/PIPE AT ITS EGRESS FROM THE WALL.
3. THE MAXIMUM ANNULAR SPACE IS NOT TO EXCEED 3/16" (5mm). (IF IT DOES PATCH WALL AND PENETRATE WALL AT ANOTHER LOCATION).
4. INSTALL THE 3M FIRESTOP ON BOTH SIDES OF THE WALL.

PENETRATION FIRESTOP FOR METAL PIPE/CONDUIT THROUGH ONE HOUR WALL

NOT TO SCALE

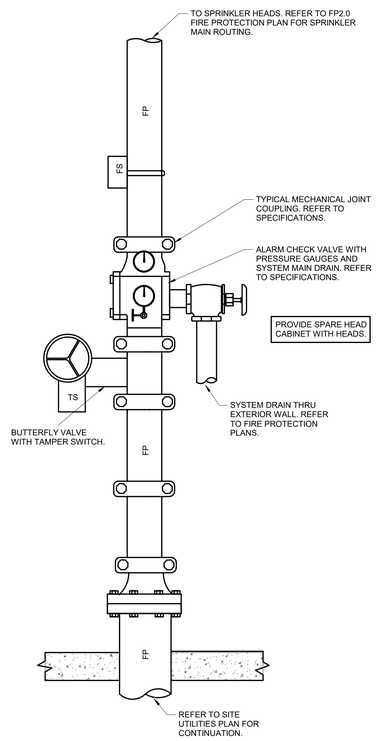

FIRE PROTECTION SYSTEM RISER

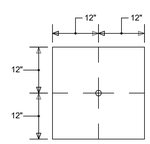

SPRINKLER HEADS TO BE INSTALLED IN CENTER OF 2x2 CEILING TILES.

2x2 CEILING TILE DETAIL

SCALE: NONE

FIRE PROTECTION GENERAL NOTES

A COORDINATE THE LOCATION OF DRAINS, THERMOSTATS, GAS OUTLETS, ETC., WITH ALL CASEWORK EQUIPMENT, MECHANICAL ROOM EQUIPMENT, ETC., PRIOR TO COMMENCING INSTALLATION. WORK NOT SO COORDINATED SHALL BE REMOVED AND PROPERLY INSTALLED AT THE EXPENSE OF THE CONTRACTOR.

B THE CONTRACTOR SHALL EXERCISE EXTREME CARE IN THE COURSE OF THEIR WORK SO AS TO ENSURE THAT THEY DO NOT INTERRUPT ANY EXISTING SERVICE. FOR SAFETY PURPOSES, PAY PARTICULAR ATTENTION TO THIS PRECAUTION RELATIVE TO NATURAL GAS AND ELECTRICAL LINES. VERIFY THE LOCATION, SIZE, TYPE, ETC., OF EACH UNDERGROUND OR OVERHEAD UTILITY. ALL WORK SHALL BE PERFORMED IN ACCORD WITH ALL FEDERAL, STATE AND/OR LOCAL RULES, REGULATIONS, STANDARD AND SAFETY REQUIREMENTS. UTILITIES SHALL BE INSTALLED IN ACCORD WITH THE APPLICABLE MUNICIPALITY OR UTILITY COMPANY STANDARDS. IN ALL CASES, THE MOST STRINGENT REQUIREMENT SHALL APPLY.

C WORK IN CONFINED AREAS SHALL BE IN ACCORDANCE WITH THE OWNER'S SAFETY POLICY REQUIREMENTS.

D ALL NEW WORK SHALL BE HUNG FROM STRUCTURE, NOT FROM THE WORK OF OTHER TRADES, WHETHER EXISTING OR NEW.

E COORDINATE ALL WORK WITH PROJECT PHASING REQUIREMENTS.

F PATCH, REPAIR AND PAINT OR PROVIDE WALL COVERING FOR (TO OWNER'S STANDARDS) EXISTING WALLS, CEILINGS, ETC., THAT ARE TO REMAIN IF DAMAGED DURING CONSTRUCTION. REPAIRS SHALL MATCH ADJACENT SURFACES TO THE SATISFACTION OF THE ARCHITECT AND OWNER.

G OBSERVE ALL APPLICABLE CODES, RULES AND REGULATIONS THAT MAY APPLY TO THE WORK UNDER THIS CONTRACT. (CITY, COUNTY, LOCAL, FEDERAL, MUNICIPALITY, UTILITY COMPANY, COMMONWEALTH OF KENTUCKY, ETC.)

H ALL MANHOLES, VAULTS AND SIMILAR UNDERGROUND STRUCTURES SHALL HAVE THE TOP ELEVATION SET FLUSH WITH FINISHED GRADE UNLESS SPECIFICALLY NOTED OTHERWISE.

I VALVES, BALANCING DAMPERS OR ANY MECHANICAL/ELECTRICAL ITEM REQUIRING ACCESS SHALL NOT BE LOCATED ABOVE A HARD CEILING. IF THIS IS NOT POSSIBLE, THEN AN APPROPRIATELY SIZED ACCESS DOOR SHALL BE PLACED UNDER THE ITEM TO ALLOW EASY MAINTENANCE AND ADJUSTMEN

J DEVIATIONS IN SIZE, CAPACITIES, FIT, FINISH, ETC. FOR EQUIPMENT FROM THAT USED AS BASIS OF DESIGN SHALL BE THE RESPONSIBILITY OF THE PURCHASER OF THAT EQUIPMENT. ANY PROVISIONS REQUIRED TO ACCOMMODATE A DEVIATION, WHETHER APPROVED BY THE ENGINEERS OR NOT

K ALL PENETRATIONS OF FIRE AND SMOKE RATED ASSEMBLIES SHALL BE APPROPRIATELY FIRE STOPPED PER AN APPROVED U.L. LISTED STANDARD. CONTRACTOR SHALL PAY PARTICULAR ATTENTION TO INSULATED PIPING PENETRATIONS.

L ALL WORK REQUIRING DOWNTIME OF ANY AREA IN THE BUILDING SHALL BE SCHEDULED 2 WEEKS IN ADVANCE, AND SHALL COMPLY WITH INTERIM LIFE SAFETY MEASURES.

M ALL PIPING IN ROOMS WITH CEILINGS SHALL BE ABOVE CEILING EXCEPT AS NOTED.

N IN ACCORDANCE WITH K.R.S. ALL PLUMBING WORK SHALL BE CONSTRUCTED IN COMPLIANCE WITH PLANS APPROVED BY AND BEARING THE APPROVAL STAMP OF THE KENTUCKY DIVISION OF PLUMBING AND/OR THE DIVISION OF WATER. THE CONTRACTOR SHALL NOT BEGIN WORK UNTIL HE HAS RECEIVED SUCH APPROVED PLANS.

O LOCATIONS OF PIPING AND EQUIPMENT ARE APPROXIMATE AND SUBJECT TO MINOR ADJUSTMENTS IN THE FIELD. DO NOT SCALE THE DRAWINGS.

P ALL OFFSETS IN PIPING ARE NOT NECESSARILY SHOWN. PROVIDE ADDITIONAL OFFSETS WHERE NECESSARY.

Q THE CONTRACTOR IS RESPONSIBLE FOR ALL UTILITY COMPANY FEES OR OTHER COSTS THAT ANY UTILITY COMPANY MAY REQUIRE TO COMPLETE THEIR WORK. (GAS, SEWER, WATER, ETC.).

R INSTALL ALL PIPING AND EQUIPMENT IN STRICT ACCORDANCE WITH MANUFACTURER'S INSTALLATION INSTRUCTION. IF IN CONFLICT WITH THE DESIGN INDICATED IN CONTRACT DOCUMENTS, ADVISE THE ENGINEERS PRIOR TO INSTALLATION FOR CLARIFICATION. PROVIDE RECOMMENDED ACCESS AND SERVICE CLEARANCES FOR ALL EQUIPMENT.

S SEAL AIRTIGHT AROUND ALL DUCTS AND PIPING PENETRATIONS THROUGH WALLS, FLOORS AND ROOF. PROVIDE FIRE STOPPING IN FIRE PARTITION.

T THE CONTRACTOR SHALL RELOCATE OR AVOID ANY EXISTING EQUIPMENT APPURTENANCES, ETC., THAT CONFLICT WITH NEW WORK.

U WHERE MOUNTING HEIGHTS ARE NOT INDICATED OR ARE IN CONFLICT WITH ANY OTHER BUILDING SYSTEM, CONTACT THE ENGINEERS BEFORE INSTALLATION. REFER ALSO TO ARCHITECTURAL WALL INTERIOR AND EXTERIOR WALL ELEVATIONS, CEILING HEIGHTS AND OTHER DETAIL OF THESE DOCUMENTS.

V ANY VIBRATING, OSCILLATING OR OTHER NOISE OR MOTION PRODUCING EQUIPMENT SHALL BE ISOLATED FROM SURROUNDING SYSTEMS IN AN APPROVED MANNER. NOISY OR STRUCTURALLY DAMAGING INSTALLATIONS SHALL BE SATISFACTORILY REPLACED OR REPAIRED AT THE INSTALLING CONTRACTOR'S EXPENSE. THE FINAL DECISION ON THE SUITABILITY OF A PARTICULAR INSTALLATION'S ACCEPTABILITY SHALL BE THAT OF THE ENGINEER.

ABBREVIATIONS

ADJ	ADJUSTABLE
AFF	ABOVE FINISHED FLOOR
AHJ	AUTHORITY HAVING JURISDICTION
ANSI	AMERICAN NATIONAL STANDARD INSTITUTE
CLG	CEILING
CLR	CLEAR
DN	DOWN
ENGR	ENGINEER
EQ	EQUAL
ETR	EXISTING TO REMAIN
EXT	EXTERIOR
FVC	FIRE VALVE CABINET
FL	FLOOR
FLA	FULL LOAD AMPS
FOB	FLAT ON BOTTOM
FOT	FLAT ON TOP
FPC	FIRE PROTECTION CONTRACTOR
FT	FEET **OR** FOOT
FUT	FUTURE
GA	GAGE/GAUGE
GAL	GALLON (-S)
GC	GENERAL CONTRACTOR
HORIZ	HORIZONTAL
ID	I (-DENTIFICATION, -NSIDE DIAMETER, -NSIDE DIMENSION)
IN	INCH (-ES)
INT	INTER (-IOR, -ERVAL)
IPS	IRON PIPE SIZE
LBS	POUNDS
LF	LINEAR FEET/FOOT
MAX	MAXIMUM
MFG	MANUFACTURER
MIN	MIN (-IMUM, -UTE)
MISC	MISCELLANEOUS
MTG	MOUNTING
N/A	NOT APPLICABLE
NC	NOISE CRITERIA **OR** NORMALLY CLOSED
NIC	NOT IN CONTRACT
NO	NORMALLY OPEN **OR** NUMBER
NTS	NOT TO SCALE
OC	ON CENTER
OD	OUTSIDE DI (-AMETER, -MENSION)
CFCI	CONTRACTOR FURNISHED, CONTRACTOR INSTALLED
OFCI	OWNER FURNISHED, CONTRACTOR INSTALLED
OFOI	OWNER FURNISHED, OWNER INSTALLED
PC	PLUMBING CONTRACTOR
PLBG	PLUMBING
PRV	PRESSURE REDUCING VALVE (STEAM, WATER, GAS)
PSF	POUNDS PER SQUARE FOOT
PSI	POUNDS PER SQUARE INCH
PSIG	PPSI GAUGE
SQ FT	SQUARE FEET **OR** FOOT
TBD	TO BE DETERMINED

ABBREVIATIONS (CONTINUED)

TE	TOP ELEVATION
TYP	TYPICAL
UNO	UNLESS NOTED OTHERWISE
WT	WEIGHT
W/	WITH
W/O	WITHOUT
%	PERCENT
℄	CENTERLINE

GENERAL SYMBOLS

#	TAGGED NOTE DESIGNATOR
1	REVISION TRIANGLE
ROOM NAME (SEE A)	ROOM TAG
TAG XXX-# INSTANCE XXXX	EQUIPMENT TAG
	POINT OF CONNECTION / CONNECT TO EXISTING
	POINT OF DEMOLITION

MECHANICAL PIPING LEGEND

	PIPE ELBOW TURNING UP
	PIPE ELBOW TURNING DOWN
	PIPE TEE; CONNECTION ON TOP
	PIPE TEE; CONNECTION ON BOTTOM
	PIPE CAP
FP	FIRE PROTECTION PIPING
D(XXX)	PIPING TO BE DEMOLISHED - (XXX) DENOTES SYSTEM
E(XXX)	EXISTING PIPING - (XXX) DENOTES SYSTEM
A(XXX)	ABANDONED IN PLACE PIPING - (XXX) DENOTES SYSTEM
	STRAINER
	MANUAL ISOLATION VALVE
	GLOBE VALVE
	OS&Y (GATE) VALVE
	PRESSURE REDUCING VALVE (STEAM, GAS, WATER, ETC.)
	CHECK VALVE
	DOUBLE CHECK VALVE ASSEMBLY
	FLEXIBLE PIPE CONNECTION
	PIPING UNION
FS	FLOW SWITCH
PS	PRESSURE SWTICH
TS	TAMPER SWITCH
	PETE'S PLUG; TEMPERATURE/PRESSURE PORT
	SEMI-RECESSED SPRINKLER HEAD WITH REMOVABLE ESCUTCHEON PLATE
	UPRIGHT TYPE SPRINKLER HEAD
	SIDEWALL TYPE SPRINKLER HEAD

APPLICABLE BUILDING CODES

APPLICABLE BUILDING CODES	DOCUMENT	YEAR
ACCESSIBLE AND USEABLE BUILDINGS AND FACILITIES	ANSI A117.1	2009
FIRE SPRINKLER CODE	NFPA 13	2013
INTERNATIONAL BUILDING CODE (IBC)	STATE EDITION	2015
INTERNATIONAL ENERGY CONSERVATION CODE (IECC)	STATE EDITION	2012
INTERNATIONAL FIRE CODE (IFC)	STATE EDITION	2015
INTERNATIONAL FUEL GAS CODE (IFGC)	STATE EDITION	2015
INTERNATIONAL MECHANICAL CODE (IMC)	STATE EDITION	2015
INTERNATIONAL PLUMBING CODE (IPC)	STATE EDITION	2015
INTERNATIONAL EXISTING BUILDING CODE (IEBC)	STATE EDITION	2009
NATIONAL ELECTRIC CODE (NEC)	NFPA 70	2017
NATIONAL FIRE ALARM & SIGNALING CODE	NFPA 72	2013
UNIFORM STATEWIDE BUILDING CODE		2018

FIRE PUMP SCHEDULE

MARK	MANUFACTURER	MODEL	FRAME	SERVICE	GPM	PRESSURE (PSI)	IMPELLAR	RPM	ELECTRICAL DATA			
									HZ	HP	VOLTAGE	PHASE
FP-1	WEG JP PUMP	1550930	213/5JP	TRACK	300	50.00	D-5656	3525	60	15	208 V	3

FLOW DATA - HYDRANT P127 SPORTSCENTER DR.

STATIC PSI:	62
RESIDUAL PSI:	50
FLOW:	1186 GPM
DURATION:	CONTINUOUS
DATE & TIME:	05/13/2017
SOURCE OF WATER:	CITY SUPPLY
SOURCE OF DATA:	KENTUCKY AMERICAN WATER
HAZARD:	LIGHT & ORDINARY
OCCUPANCY OF BUILDING:	ASSEMBLY

JRA architects
3225 Summit Square Place, Suite 200
Lexington, Kentucky 40509
859.252.6781

NOT FOR CONSTRUCTION

RESERVED FOR AHJ STAMP

CMTA

RFP 2 DRAWINGS

UK INDOOR TRACK FACILITY
UNIVERSITY OF KENTUCKY
LEXINGTON, KENTUCKY

FIRE PROTECTION

PROJECT	202258
DATE	8.31.22

REVISIONS

No.	Description	Date

JRA ARCHITECTS HAS RETAINED AN ELECTRONIC VERSION OF THESE DRAWINGS. THE CLIENT AGREES NOT TO REUSE THESE DRAWINGS - IN ELECTRONIC OR ANY OTHER FORMAT - IN WHOLE, OR IN PART, FOR ANY PURPOSE OTHER THAN FOR THE PROJECT. THE CLIENT AGREES NOT TO TRANSFER THESE ELECTRONIC FILES TO OTHERS WITHOUT THE PRIOR WRITTEN CONSENT OF THE ARCHITECT. THE CLIENT FURTHER AGREES TO WAIVE ALL CLAIMS AGAINST THE ARCHITECT RESULTING IN ANY WAY FROM ANY UNAUTHORIZED CHANGES TO OR REUSE OF THE ELECTRONIC FILES FOR ANY OTHER PROJECT BY ANYONE OTHER THAN THE ARCHITECT.

FIRE SUPPRESSION LEGEND

FP-101

COPYRIGHT 2022 - JRA, INC.

8/31/2022 4:35:45 PM

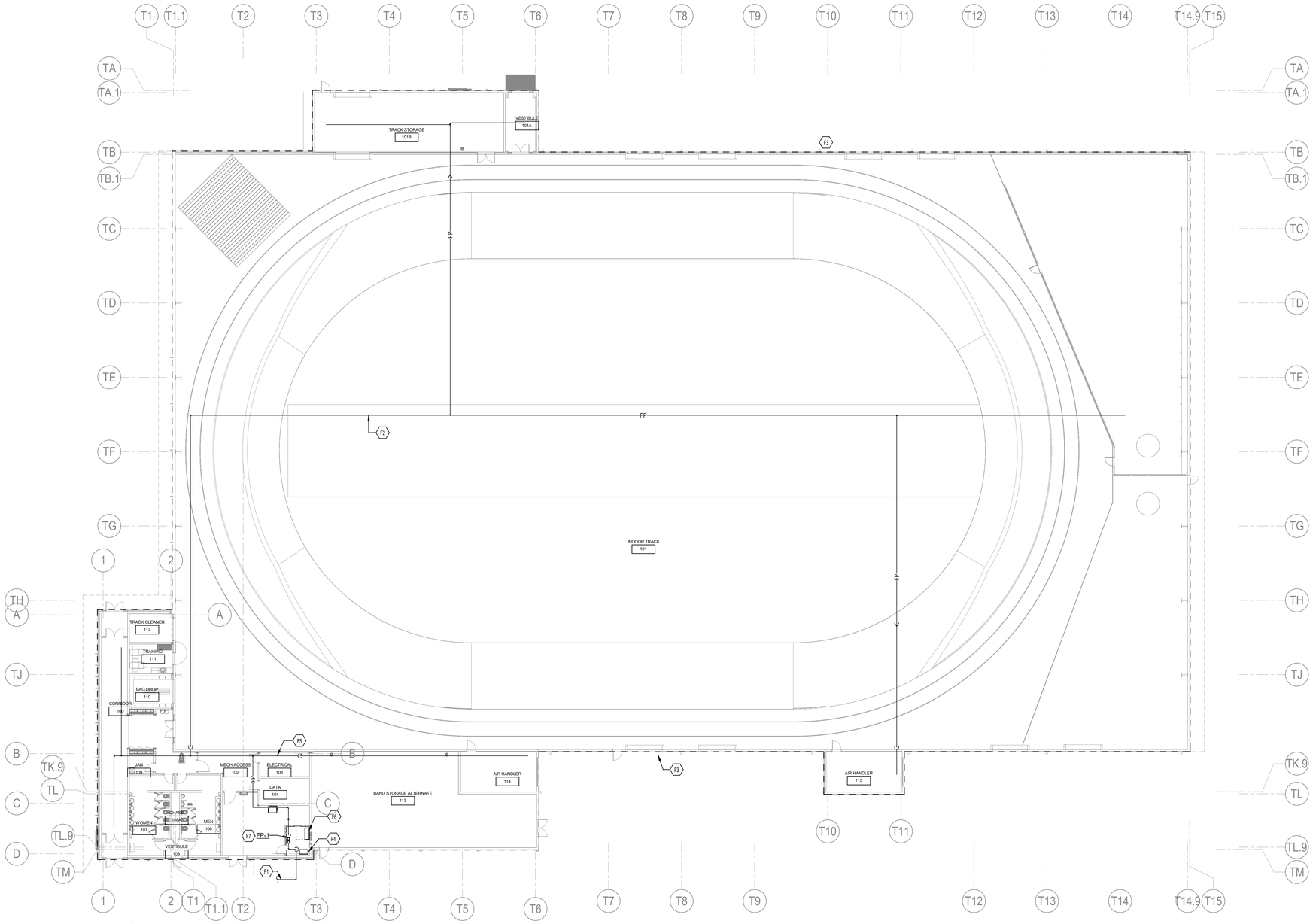

1 **OVERALL FIRE PROTECTION PLAN**
1/16" = 1'-0"

TAGGED NOTES

##

- F1 REFER TO SITE PLAN FOR CONTINUATION.
- F2 INSTALL SPRINKLER PIPE TIGHT TO STRUCTURE.
- F3 THE ENTIRE OUTLINED AREA SHALL BE PROTECTED WITH A 100% "WET" TYPE SPRINKLER SYSTEM INSTALLED IN ACCORDANCE WITH NFPA 13. SPRINKLER CONTRACTOR SHALL INSTALL SPRINKLER PIPING SO AS TO NOT INTERFERE WITH HVAC, PLUMBING AND ELECTRICAL EQUIPMENT MAINTENANCE/SERVICE AND ARCHITECTURAL FINISH CLEARANCES.
- F4 FIRE PROTECTION ENTRANCE. REFER TO FP1.0 FOR FIRE PROTECTION ENTRANCE RISER DETAIL.
- F5 COORDINATE ROUTE WITH ELECTRICAL GEAR. NO PIPING TO SHALL BE INSTALLED OVER ELECTRICAL EQUIPMENT.
- F6 FIRE PUMP CONTROLLER TO BE MOUNTED AGAINST WALL.
- F7 NEW FIRE PUMP TO BE INSTALLED INLINE WITH FIRE PROTECTION SYSTEM ON WALL. FIRE PUMP, CONTROLLER, AND ALL ACCESSORIES ARE TO BE LOCATED IN THE FIRE PUMP ROOM.

JRA architects
3225 Summit Square Place, Suite 200
Lexington, Kentucky 40509
859.252.6781

NOT FOR CONSTRUCTION

RESERVED FOR AHJ STAMP

CMTA

RFP 2 DRAWINGS

UK INDOOR TRACK FACILITY
UNIVERSITY OF KENTUCKY
LEXINGTON, KENTUCKY

FIRE PROTECTION

PROJECT	202258
DATE	8.31.22

REVISIONS

No.	Description	Date

JRA ARCHITECTS HAS RETAINED AN ELECTRONIC VERSION OF THESE DRAWINGS. THE CLIENT AGREES NOT TO REUSE THESE DRAWINGS - IN ELECTRONIC OR ANY OTHER FORMAT - IN WHOLE, OR IN PART, FOR ANY PURPOSE OTHER THAN FOR THE PROJECT. THE CLIENT AGREES NOT TO TRANSFER THESE ELECTRONIC FILES TO OTHERS WITHOUT THE PRIOR WRITTEN CONSENT OF THE ARCHITECT. THE CLIENT FURTHER AGREES TO WAIVE ALL CLAIMS AGAINST THE ARCHITECT RESULTING IN ANY WAY FROM ANY UNAUTHORIZED CHANGES TO OR REUSE OF THE ELECTRONIC FILES FOR ANY OTHER PROJECT BY ANYONE OTHER THAN THE ARCHITECT.

OVERALL FIRE PROTECTION PLAN

FP-201

COPYRIGHT 2022 - JRA, INC.

C:\Users\namos\Documents\XKTF22 Central File_nolanjamos.rvt
8/31/2022 4:35:49 PM

C:\Users\namos\Documents\XKTF22 Central File_nolanjamos.rvt

PLUMBING GENERAL NOTES

A COORDINATE THE LOCATION OF DRAINS, THERMOSTATS, GAS OUTLETS, ETC., WITH ALL CASEWORK EQUIPMENT, MECHANICAL ROOM EQUIPMENT, ETC., PRIOR TO COMMENCING INSTALLATION. WORK NOT SO COORDINATED SHALL BE REMOVED AND PROPERLY INSTALLED AT THE EXPENSE OF THE CONTRACTOR.

B THE CONTRACTOR SHALL EXERCISE EXTREME CARE IN THE COURSE OF THEIR WORK SO AS TO ENSURE THAT THEY DO NOT INTERRUPT ANY EXISTING SERVICE. FOR SAFETY PURPOSES, PAY PARTICULAR ATTENTION TO THIS PRECAUTION RELATIVE TO NATURAL GAS AND ELECTRICAL LINES. VERIFY THE LOCATION, SIZE, TYPE, ETC., OF EACH UNDERGROUND OR OVERHEAD UTILITY. ALL WORK SHALL BE PERFORMED IN ACCORD WITH ALL FEDERAL, STATE AND/OR LOCAL RULES, REGULATIONS, STANDARD AND SAFETY REQUIREMENTS. UTILITIES SHALL BE INSTALLED IN ACCORD WITH THE APPLICABLE MUNICIPALITY OR UTILITY COMPANY STANDARDS. IN ALL CASES, THE MOST STRINGENT REQUIREMENT SHALL APPLY.

C WHERE WORK IS REQUIRED ABOVE EXISTING LAY-IN, PLASTER OR GYPSUM BOARD CEILINGS, THE CONTRACTOR SHALL BE RESPONSIBLE FOR REMOVAL AND REINSTALLATION (OR REPLACEMENT, IF DAMAGED) OF ALL CEILING OR TILE AND GRID MEMBERS NECESSARY TO PERFORM HIS WORK. NEW TILE AND GRID SHALL MATCH THE SURROUNDING AREAS. ALL PATCHING WORK SHALL MATCH ADJACENT SURFACES.

D ALL NEW WORK SHALL BE HUNG FROM STRUCTURE, NOT FROM THE WORK OF OTHER TRADES, WHETHER EXISTING OR NEW.

E COORDINATE ALL WORK WITH PROJECT PHASING REQUIREMENTS.

F PATCH, REPAIR AND PAINT OR PROVIDE WALL COVERING FOR (TO OWNER'S STANDARDS) EXISTING WALLS, CEILINGS, ETC., THAT ARE TO REMAIN IF DAMAGED DURING CONSTRUCTION. REPAIRS SHALL MATCH ADJACENT SURFACES TO THE SATISFACTION OF THE ARCHITECT AND OWNER.

G OBSERVE ALL APPLICABLE CODES, RULES AND REGULATIONS THAT MAY APPLY TO THE WORK UNDER THIS CONTRACT. (CITY, COUNTY, LOCAL, FEDERAL, MUNICIPALITY, UTILITY COMPANY, COMMONWEALTH OF KENTUCKY, ETC.)

H CONTRACTOR SHALL BE AWARE OF UNSEEN PLUMBING WORK DURING DEMOLITION. IF ITEMS ARE UNCOVERED DURING DEMOLITION THEN FIELD VERIFY THE USE OF THE ITEMS AND PLAN AN ALTERNATE ROUTE TO RUN THESE ITEMS. THEN CONTACT THE ENGINEERS TO REVIEW THE ROUTING.

I IF AREA OF CONSTRUCTION HAS A POST TENSION FLOOR SLAB. CONTRACTOR SHALL USE ULTRA SOUND OR OTHER APPROVED METHODS TO SURVEY THE EXISTING FLOOR STRUCTURE BEFORE MAKING ANY AND ALL FLOOR PENETRATIONS.

J WHERE FIRE PROOFING IS SPRAYED ON EXISTING STRUCTURE ALL EXISTING CONDUITS, WATER, HYDRONIC, STEAM, CHILLED WATER, FIRE PROTECTION LINES, MED GAS, ETC. SHALL BE LOWERED TO BE BELOW FULL THICKNESS OF FIRE PROOFING WITH NO INTERFERENCE.

K ALL PENETRATIONS OF FIRE AND SMOKE RATED ASSEMBLIES SHALL BE APPROPRIATELY FIRE STOPPED PER AN APPROVED U.L. LISTED STANDARD. CONTRACTOR SHALL PAY PARTICULAR ATTENTION TO INSULATED PIPING PENETRATIONS.

L ALL WORK REQUIRING DOWNTIME OF ANY AREA IN THE BUILDING SHALL BE SCHEDULED 2 WEEKS IN ADVANCE, AND SHALL COMPLY WITH INTERIM LIFE SAFETY MEASURES.

M ALL PIPING IN ROOMS WITH CEILINGS SHALL BE ABOVE CEILING EXCEPT AS NOTED.

N IN ACCORDANCE WITH K.R.S. ALL PLUMBING WORK SHALL BE CONSTRUCTED IN COMPLIANCE WITH PLANS APPROVED BY AND BEARING THE APPROVAL STAMP OF THE KENTUCKY DIVISION OF PLUMBING AND/OR THE DIVISION OF WATER. THE CONTRACTOR SHALL NOT BEGIN WORK UNTIL HE HAS RECEIVED SUCH APPROVED PLANS.

O LOCATIONS OF PIPING AND EQUIPMENT ARE APPROXIMATE AND SUBJECT TO MINOR ADJUSTMENTS IN THE FIELD. DO NOT SCALE THE DRAWINGS.

P ALL OFFSETS IN PIPING ARE NOT NECESSARILY SHOWN. PROVIDE ADDITIONAL OFFSETS WHERE NECESSARY.

Q THE CONTRACTOR IS RESPONSIBLE FOR ALL UTILITY COMPANY FEES OR OTHER COSTS THAT ANY UTILITY COMPANY MAY REQUIRE TO COMPLETE THEIR WORK. (GAS, SEWER, WATER, ETC.).

R INSTALL ALL PIPING AND EQUIPMENT IN STRICT ACCORDANCE WITH MANUFACTURER'S INSTALLATION INSTRUCTION. IF IN CONFLICT WITH THE DESIGN INDICATED IN CONTRACT DOCUMENTS, ADVISE THE ENGINEERS PRIOR TO INSTALLATION FOR CLARIFICATION. PROVIDE RECOMMENDED ACCESS AND SERVICE CLEARANCES FOR ALL EQUIPMENT.

S SEAL AIRTIGHT AROUND ALL DUCTS AND PIPING PENETRATIONS THROUGH WALLS, FLOORS AND ROOF. PROVIDE FIRE STOPPING IN FIRE PARTITION.

T THE CONTRACTOR SHALL RELOCATE OR AVOID ANY EXISTING EQUIPMENT APPURTENANCES, ETC., THAT CONFLICT WITH NEW WORK.

U WHERE MOUNTING HEIGHTS ARE NOT INDICATED OR ARE IN CONFLICT WITH ANY OTHER BUILDING SYSTEM, CONTACT THE ENGINEERS BEFORE INSTALLATION. REFER ALSO TO ARCHITECTURAL WALL INTERIOR AND EXTERIOR WALL ELEVATIONS, CEILING HEIGHTS AND OTHER DETAIL OF THESE DOCUMENTS.

V DOUBLE WIDTH TURNING VANES SHALL BE INSTALLED IN ALL SUPPLY, RETURN, AND EXHAUST DUCTWORK ELBOWS. TURNING VANES NOT REQUIRED FOR KITCHEN EXHAUSTS.

W ANY VIBRATING, OSCILLATING OR OTHER NOISE OR MOTION PRODUCING EQUIPMENT SHALL BE ISOLATED FROM SURROUNDING SYSTEMS IN AN APPROVED MANNER. NOISY OR STRUCTURALLY DAMAGING INSTALLATIONS SHALL BE SATISFACTORILY REPLACED OR REPAIRED AT THE INSTALLING CONTRACTOR'S EXPENSE. THE FINAL DECISION ON THE SUITABILITY OF A PARTICULAR INSTALLATION'S ACCEPTABILITY SHALL BE THAT OF THE ENGINEER.

X DEVIATIONS IN SIZE, CAPACITIES, FIT, FINISH, ETC. FOR EQUIPMENT FROM THAT USED AS BASIS OF DESIGN SHALL BE THE RESPONSIBILITY OF THE PURCHASER OF THAT EQUIPMENT. ANY PROVISIONS REQUIRED TO ACCOMMODATE A DEVIATION, WHETHER APPROVED BY THE ENGINEERS OR NOT, SHALL BE THE RESPONSIBILITY OF THE PURCHASER.

Y VALVES, BALANCING DAMPERS OR ANY MECHANICAL/ELECTRICAL ITEM REQUIRING ACCESS SHALL NOT BE LOCATED ABOVE A HARD CEILING. IF THIS IS NOT POSSIBLE, THEN AN APPROPRIATELY SIZED ACCESS DOOR SHALL BE PLACED UNDER THE ITEM TO ALLOW EASY MAINTENANCE AND ADJUSTMENT. ADDITIONALLY ALL SUCH ITEMS SHALL NOT BE LOCATED AN UNREASONABLE DISTANCE ABOVE THE CEILINGS. IN GENERAL ALL SUCH ITEMS UNLESS INDICATED OTHERWISE SHALL BE MOUNTED SIX TO TWELVE INCHES ABOVE THE CEILING. IF IN DOUBT, CONTACT ENGINEER PRIOR TO INSTALLING.

Z ALL MANHOLES, VAULTS AND SIMILAR UNDERGROUND STRUCTURES SHALL HAVE THE TOP ELEVATION SET FLUSH WITH FINISHED GRADE UNLESS SPECIFICALLY NOTED OTHERWISE.

AA WHEN RUNNING ANY TYPE OF PIPING BELOW A FOOTER, OR IN THE ZONE OF INFLUENCE THE PIPING SHALL BE BACKFILLED WITH CEMENTITIOUS FLOWABLE FILL PER SPECIFICATIONS. WHENEVER POSSIBLE, LOCATE PIPING OUTSIDE OF THE ZONE OF INFLUENCE. THE ZONE OF INFLUENCE IS THE AREA UNDER THE FOOTER WITHIN A 45 DEGREE ANGLE PROJECTING DOWN FROM THE BOTTOM EDGE OF THE FOOTER OF ALL SIDES OF THE FOOTER. ADDITIONALLY, GREASE TRAPS, MANHOLES, VAULTS AND OTHER UNDERGROUND STRUCTURES SHALL BE HELD AWAY FROM BUILDING WALLS FAR ENOUGH TO BE OUTSIDE OF THE ZONE OF INFLUENCE.

AB THE DOCUMENTS COMPLY WITH 2006 IMC, 2007 KBC, AND 2009 IECC.

AC THE DOCUMENTS COMPLY WITH 2006 IMC, 2007 KBC, AND ASHRAE 90.1-2007.

AD WORK IN CONFINED AREAS SHALL BE IN ACCORDANCE WITH THE OWNER'S SAFETY POLICY REQUIREMENTS.

PLUMBING DEMOLITION NOTES

A THE CONTRACTOR SHALL REFER TO THE ARCHITECTURAL PLANS FOR AREAS IN WHICH THE CEILING IS REMAINING. THE CONTRACTOR IS RESPONSIBLE FOR REMOVING THE EXISTING CEILING AS REQUIRED AND REINSTALLATION. TEMPORARILY SUPPORT LIGHTS, DIFFUSERS, CEILING ETC. REPLACE BROKEN CEILING TILES WITH NEW AT NO ADDITIONAL COST TO OWNER. FIELED VERIFY EXACT REQUIREMENTS.

B DURING SPRINKLER SYSTEM OUTAGES THE CONTRACTORS SHALL PROVIDE FIRE WATCH OF AREAS WITH OUTAGES.

C ALL WALLS AND FLOOR SLABS SHALL BE REPAIRED TO MATCH EXISTING AND TO A LIKE NEW CONDITION. ALL RATED WALLS AND FLOOR SLABS SHALL BE PATCHED AND REPAIRED TO MAINTAIN RATING.

D ALL EXISTING BUILDING FINISHES SHALL BE PROTECTED DURING THE DEMOLITION PHASE.

E HEAVY DASHED LINES INDICATE ITEMS FOR REMOVAL (UON) AND LIGHT SOLID LINES INDICATE EXISTING ITEMS TO REMAIN.

F COORDINATE DISPOSAL OF ALL FIXTURES, DEVICES, ETC. (INDICATED FOR DEMOLITION) WITH THE OWNER.

G ALL OUTAGES SHALL BE SCHEDULED THROUGH THE UK CPMD PROJECT REPRESENTATIVE FOR PROPER COORDINATION. A REQUEST FOR AN OUTAGE SHALL BE SUBMITTED IN WRITING A MINIMUM OF TWO WEEKS IN ADVANCE.

H ALL DUCTWORK, PIPING, CONDUIT, ETC. SHALL BE INSTALLED A MINIMUM OF 4" ABOVE THE TOP OF THE CEILING GRID PER UK STANDARDS.

PLUMBING HAZARDOUS MATERIALS NOTES

A THE CONTRACTOR IT IS HEREBY ADVISED THAT IS POSSIBLE THAT ASBESTOS AND/OR OTHER HAZARDOUS MATERIALS ARE OR WERE PRESENT IN THIS BUILDING(S). ANY WORKER, OCCUPANT, VISITOR, ETC., WHO ENCOUNTERS ANY MATERIAL OF WHOSE CONTENT THEY ARE NOT CERTAIN SHALL PROMPTLY REPORT THE EXISTENCE AND LOCATION OF THAT MATERIAL TO THE OWNER. FURTHERMORE, THE CONTRACTOR SHALL INSURE THAT NO ONE COMES NEAR TO OR IN CONTACT WITH ANY SUCH MATERIAL OR FUMES THEREFROM UNTIL ITS CONTENT CAN BE ASCERTAINED TO BE NON-HAZARDOUS.

B CMTA, INC. HAS NO EXPERTISE IN THE DETERMINATION OF THE PRESENCE OF ANY HAZARDOUS MATERIAL. THEREFORE, NO ATTEMPT HAS BEEN MADE BY CMTA TO IDENTIFY THE EXISTENCE OR LOCATION OF ANY SUCH HAZARDOUS MATERIAL. FURTHERMORE, CMTA NOR ANY AFFILIATE HEREOF WILL NOT OFFER OR MAKE ANY RECOMMENDATIONS RELATIVE TO THE REMOVAL, HANDLING OR DISPOSAL OF SUCH MATERIAL.

C IF THE WORK WHICH IS TO BE PERFORMED INTERFACES, CONNECTS OR RELATES IN ANY PHYSICAL WAY WITH OR TO EXISTING COMPONENTS WHICH CONTAIN OR BEAR ANY HAZARDOUS MATERIAL, ASBESTOS BEING ONE, THEN IT SHALL BE THE CONTRACTOR'S SOLE RESPONSIBILITY TO CONTACT THE OWNER AND SO ADVISE HIM IMMEDIATELY.

D THE CONTRACTOR BY EXECUTION OF THE CONTRACT FOR ANY WORK AND/OR BY THE ACCOMPLISHMENT OF ANY WORK THEREBY AGREE TO BRING NO CLAIM RELATIVE TO HAZARDOUS MATERIALS FOR NEGLIGENCE, BREACH OF CONTRACT, INDEMNITY, OR ANY OTHER SUCH ITEM AGAINST CMTA, ITS PRINCIPALS, EMPLOYEES, AGENTS OR CONSULTANTS. ALSO, THE CONTRACTOR FURTHER AGREES TO DEFEND, INDEMNIFY AND HOLD CMTA, ITS PRINCIPALS, EMPLOYEES, AGENTS AND CONSULTANTS HARMLESS FROM ANY SUCH RELATED CLAIMS WHICH MAY BE BROUGHT BY ANY SUBCONTRACTORS, SUPPLIERS OR ANY OTHER THIRD PARTIES.

E THE CONTRACTOR IS DIRECTED TO THE SPECIFICATIONS FOR FURTHER INFORMATION.

PLUMBING PHASING NOTES

A THIS PROJECT INTERFACES EXTENSIVELY WITH EXISTING BUILDING SERVICES. IT SHALL BE THE CONTRACTOR'S RESPONSIBILITY TO COORDINATE AND PHASE ALL TIE-INS AND INTERRUPTIONS OF EXISTING SERVICES TO MINIMIZE OR ELIMINATE DOWNTIME. AS AN EXAMPLE, MAIN GAS SERVICE, WATER SERVICE, ELECTRICAL SERVICE, HVAC SERVICES, STEAM GENERATION, ETC., WILL BE AFFECTED AND REPLACED OR MOVED DURING THIS PROJECT. THE CONTRACTOR SHALL INSTALL ALL NEW SERVICES AND EQUIPMENT AND HAVE THEM TESTED AND FULLY AND RELIABLY FUNCTIONAL PRIOR TO INTERRUPTING, RELOCATING OR REMOVING ANY EXISTING SERVICES. IT SHALL BE THE CONTRACTOR'S RESPONSIBILITY TO BARE ANY AND ALL COSTS ASSOCIATED WITH THIS PHASING, INCLUDING TEMPORARY SERVICES, TEMPORARY RELOCATION, PREMIUM TIME WORK, ETC. CONTRACTOR SHALL COORDINATE ALL SAID WORK WITH THE OWNER AND APPLICABLE UTILITIES PER THE CONTRACT DOCUMENTS.

ABBREVIATIONS

AC	ALTERNATING CURRENT
ADJ	ADJUSTABLE
AFF	ABOVE FINISHED FLOOR
AFR	ABOVE FINISHED ROOF
AFUE	ANNUAL FUEL UTILIZATION EFFICIENCY
AHJ	AUTHORITY HAVING JURISDICTION
AMP	AMPERE (AMP, AMPS)
ANSI	AMERICAN NATIONAL STANDARD INSTITUTE
APD	AIR PRESSURE DROP
ASHRAE	AMERICAN SOCIETY OF HEATING, REFRIGERATION, AND AIR-CONDITIONING ENGINEERS
AVG	AVERAGE
BAS	BUILDING AUTOMATION SYSTEM
BHP	BREAK HORSEPOWER
BTU	BRITISH THERMAL UNIT
CAP	CAPACITY
CD	CONDENSATE DRAIN
CFM	CUBIC FEET PER MINUTE
C.I.	CAST IRON
CLG	CEILING
CLR	CLEAR
CO	CARBON MONOXIDE
COND	CONDENS (-ER, -ING, -ATION, -ATE)
CONT	CONTINU (-ED, -OUS)
CU FT	CUBIC FEET
CU IN	CUBIC INCHES
CV	VALVE FLOW COEFFICIENT
dB	DECIBEL
DB	DRY BULB
DC	DIRECT CURRENT
DD	DUCT SMOKE DETECTOR
DDC	DIRECT DIGITAL CONTROLS
DEG	DEGREE (-S)
DIA	DIAMETER (-S)
DN	DOWN
DWG	DRAWING
EC	ELECTRICAL CONTRACTOR
ELEV	ELEVA (-TION, -TOR)
ENGR	ENGINEER
EQ	EQUAL
ESP	EXTERNAL STATIC PRESSURE
ETR	EXISTING TO REMAIN
EVAP	EVAPORAT (-E, -ING, -ED, -OR, -ION)
EWT	ENTERING WATER TEMPERATURE
EXP	EXPANSION
EXT	EXTERIOR
FA	FREE AREA

ABBREVIATIONS (CONTINUED)

FL	FLOOR
FLA	FULL LOAD AMPS
FOB	FLAT ON BOTTOM
FOT	FLAT ON TOP
FPC	FIRE PROTECTION CONTRACTOR
FPM	FEET PER MINUTE
FPS	FEET PER SECOND
FT	FEET **OR** FOOT
FUT	FUTURE
FV	FACE VELOCITY
GA	GAGE/GAUGE
GAL	GALLON (-S)
GC	GENERAL CONTRACTOR
GPD	GALLONS PER DAY
GPH	GALLONS PER HOUR
GPM	GALLONS PER MINUTE
GR	GRAINS
H	HUMIDITY
HD	HEAD
HG	MERCURY
HORIZ	HORIZONTAL
HP	H (-ORSEPOWER, -EAT PUMP)
HR	HOUR (-S)
HVAC	HEATING, VENTILATING, & AIR-CONDITIONING
Hz	HERTZ
ID	I (-DENTIFICATION, -NSIDE DIAMETER, -NSIDE DIMENSION)
IN	INCH (-ES)
INSUL	INSULAT (-ED, -ION)
INT	INTER (-IOR, -ERVAL)
IPS	IRON PIPE SIZE
kW	KILOWATT
kWh	KILOWATT HOUR
LBS	POUNDS
LF	LINEAR FEET/FOOT
LRA	LOCKED ROTOR AMPS
LWT	LEAVING WATER TEMPERATURE
MAX	MAXIMUM
MBH	BTU PER HOUR [THOUSANDS]
MCA	MINIMUM CIRCUIT AMPS
MFG	MANUFACTURER
MIN	MIN (-IMUM, -UTE)
MISC	MISCELLANEOUS
MOCP	MAXIMUM OVERCURRENT PROTECTION [AMPS]
MTG	MOUNTING
N/A	NOT APPLICABLE
NC	NOISE CRITERIA **OR** NORMALLY CLOSED
NEBB	NATIONAL ENVIRONMENTAL BALANCING BUREAU
NIC	NOT IN CONTRACT

ABBREVIATIONS (CONTINUED)

NO	NORMALLY OPEN **OR** NUMBER
NTS	NOT TO SCALE
OC	ON CENTER
OD	OUTSIDE DI (-AMETER, -MENSION)
CFCI	CONTRACTOR FURNISHED, CONTRACTOR INSTALLED
OFCI	OWNER FURNISHED, CONTRACTOR INSTALLED
OFOI	OWNER FURNISHED, OWNER INSTALLED
OR	OPEN RECEPTACLE
OZ	OUNCE (-S)
PC	PLUMBING CONTRACTOR
PD	PRESSURE DROP
PH	PHASE [ELECTRICAL]
PLBG	PLUMBING
PPM	PARTS PER MILLION
PRS	PRESSURE REDUCING STATION
PRV	PRESSURE REDUCING VALVE (STEAM, WATER, GAS)
PSF	POUNDS PER SQUARE FOOT
PSI	POUNDS PER SQUARE INCH
PSIG	PPSI GAUGE
RLA	RUNNING LOAD AMPS
RPM	REVOLUTIONS PER MINUTE
SQ	SQUARE
SQ FT	SQUARE FEET **OR** FOOT
SQ IN	SQUARE INCH **OR** INCHES
TAB	TESTING AND BALANCING
TBD	TO BE DETERMINED
TE	TOP ELEVATION
TEMP	TEMPERATURE
TPA	TRAP PRIMER ADAPTER
TSP	TOTAL STATIC PRESSURE
TYP	TYPICAL
UNO	UNLESS NOTED OTHERWISE
V	VOLT (-AGE, -S)
VAR	VARI (-ABLE, -IES)
VAV	VARIABLE AIR VOLUME
VEL	VELOCITY
VFD	VARIABLE FEQUENCY DRIVE
W	WATT (-AGE, -S)
WB	WET BULB
WBT	WET BULB TEMPERATURE
WPD	WATER PRESSURE DROP
WT	WEIGHT
W/	WITH
W/O	WITHOUT
%	PERCENT
ΔP	DIFFERENTIAL PRESSURE
ΔT	TEMPERATURE DIFFERENCE
℄	CENTERLINE

GENERAL SYMBOLS

#	TAGGED NOTE DESIGNATOR
X	REVISION TRIANGLE
	ROOM TAG
TAG XXX-# INSTANCE XXXX	EQUIPMENT TAG
XXX ##	DOMESTIC WATER RISER TAG
XXX ##	SANITARY, WASTE, & VENT RISER TAG
XXX ##	FIRE SUPPRESSION RISER TAG
	POINT OF CONNECTION / CONNECT TO EXISTING
	POINT OF DEMOLITION
D(XXX)	PIPING TO BE DEMOLISHED - (XXX) DENOTES SYSTEM
E(XXX)	EXISTING PIPING - (XXX) DENOTES SYSTEM
A(XXX)	ABANDONED IN PLACE PIPING - (XXX) DENOTES SYSTEM

VALVE SYMBOL LEGEND

	TWO-WAY CONTROL VALVE
	THREE-WAY CONTROL VALVE
	AUTOMATIC AIR VENT (AAV)
	MANUAL AIR VENT (MAV)
	MANUAL BALANCING VALVE (BV)
	BALL VALVE
	BUTTERFLY VALVE
	TRIPLE DUTY VALVE (TDV)
	STRAINER
	MANUAL ISOLATION VALVE
	GLOBE VALVE
	OS&Y (GATE) VALVE
	PRESSURE REDUCING VALVE (STEAM, GAS, WATER, ETC.)
	AUTO-FLOW CONTROL VALVE
	CHECK VALVE
	DOUBLE CHECK VALVE ASSEMBLY

PLUMBING PIPING LEGEND

	PIPE ELBOW TURNING UP
	PIPE ELBOW TURNING DOWN
	PIPE TEE; CONNECTION ON TOP
	PIPE TEE; CONNECTION ON BOTTOM
	PIPE CAP
AVT	ACID VENT
AW	ACID WASTE
CA	COMPRESSED AIR
CAI/E	COMBUSTION AIR INTAKE/EXHAUST
CBS/R	CHILLED BEAM SUPPLY/RETURN
CD	CONDENSATE DRAIN
CO2	CARBON DIOXIDE
CST	CLEAN STEAM PIPING
DCW	DOMESTIC COLD WATER (DCW)
DHW DHW(#°F)	DOMESTIC HOT WATER (DHW)
DHR DHR(#°F)	RECIRCULATED DOMESTIC HOT WATER (DHR)
HPC	HIGH PRESSURE STEAM CONDENSATE
HPS(#)	HIGH PRESSURE STEAM; (#) DENOTES PRESSURE
HPS/R	HEAT PUMP WATER SUPPLY/RETURN
HRS/R	HEAT RECOVERY SUPPLY/RETURN PIPING
HWS/R	HEATING WATER SUPPLY/RETURN
LPC	LOW PRESSURE STEAM CONDENSATE
LPS(#)	LOW PRESSURE STEAM; (#) DENOTES PRESSURE
MPC	MEDIUM PRESSURE STEAM RETURN
MPS(#)	MEDIUM PRESSURE STEAM; (#) DENOTES PRESSURE
SPD	STEAM CONDENSATE PUMPED DISCHARGE
SVT	STEAM VENT PIPING

PLUMBING SYMBOL LEGEND

	FLEXIBLE PIPE CONNECTION
	FLOW METER (VENTURI)
	PIPING UNION
FS	FLOW SWITCH
PS	PRESSURE SWTICH
TS	TAMPER SWITCH
	THERMOMETER
	PETE'S PLUG; TEMPERATURE/PRESSURE PORT

PLUMBING FIXTURE SCHEDULE

TAG	DESCRIPTION	CW	HW	VENT	WASTE/DRAIN	VOLTAGE	EXTERNAL CHECK VALVE
FD-1	FLOOR DRAIN - 12" X 12" : ZURN, ZN-610 OR EQUAL, FLOOR DRAIN WITH 12"X12" LOCKING GRATE, SECONDARY STRAINER, SEDIMENT BUCKET AND GALVANIZED CAST IRON CONSTRUCTION WITH TRAP PRIMER CONNECTION; NICKEL BRONZE STRAINER; 4" DRAIN OUTLET.	-	-	2"	4"	Yes	Yes
FD-2	FLOOR DRAIN - 6" DIA. : ZURN, ZN-415 OR EQUAL FLOOR DRAIN WITH 6" DIAMETER TOP, TYPE "B" NICKEL BRONZE STRAINER, 4" DRAIN OUTLET AND TRAP PRIMER CONNECTION.	-	-	2"	4"	Yes	Yes
FPWH	FREEZE-PROOF WALL HYDRANT : ZURN 1300 OR EQUIVALENT, 3/4", ENCASED, FLUSH, NON-FREEZE WALL HYDRANT WITH KEY LOCK AND COMBINATION BACKFLOW PREVENTER/VACUUM BREAKER. MOUNT HYDRANT AT A MINIMUM OF 20" ABOVE FINISHED GRADE. REFER TO MECHANICAL SPECIFICATION FOR ADDITIONAL REQUIREMENTS.	3/4"	-	-	-	No	No
HB	HOSE BIBB : ZURN MODEL Z1350 OR EQUAL ENCASED MODERATE CLIMATE WALL HYDRANT FOR NARROW WALL INSTALLATION. WITH ALL BRONZE BODY, ALL BRONZE INTERIOR PARTS, REPLACEABLE SEAT WASHER, LOOSE KEY OPERATED CONTROL VALVE, VACUUM BREAKER AND 3/4" MALE HOSE CONNECTION. ADJUSTABLE STAINLESS STEEL BOX FURNISHED WITH HINGED COVER CYLINDER LOCK AND "WATER" STAMPED ON THE COVER. MOUNTED WITH HOSE CONNECTION AT 18" ABOVE FINISHED FLOOR ELEVATION OF AREA SERVED.	1/2"	-	-	-	Yes	Yes
HB2	HOSE BIBB (EXPOSED) : WOODFORD MODEL 24 OR EQUAL WITH LOOSE KEY HANDLE POLISHED CHROME FINISH, BRASS CONSTRUCTION. MOUNT HOSE BIBB 18" ABOVE FINISHED FLOOR ELEVATION OF AREA SERVED. REFER TO MECHANICAL SPECIFICATION FOR ADDITIONAL REQUIREMENTS.	1/2"	-	-	-	Yes	Yes
P-1	WATER CLOSET - WALL MOUNTED- BATTERY POWERED FLUSH VALVES: VITREOUS CHINA, WALL MOUNTED ELONGATED BOWL, SIPHON JET, 11/2" TOP SPUD INLET, CHINA BOLT CAPS AND WHITE OPEN FRONT PLASTIC SEAT WITH SELF-SUSTAINING CHECK HINGES. PROVIDE WITH MANUAL 1.6 GPF FLUSH VALVE. PROVIDE WALL CARRIER. MOUNT WITH BOWL AT 15" AFF.	1-1/2"	-	2"	4"	No	Yes
P-1A	WATER CLOSET - WALL MOUNTED - BATTERY POWERED FLUSH VALVES - ADA COMPLIANT : VITREOUS CHINA, 18" HIGH ELONGATED BOWL, SIPHON JET, 11/2" TOP SPUD INLET, CHINA BOLT CAPS AND WHITE OPEN FRONT PLASTIC SEAT WITH SELF-SUSTAINING CHECK HINGES. PROVIDE MANUAL 1.6 GPF FLUSH VALVE WITH HANDLE AT A MAXIMUM OF 31" AFF.	1-1/2"	-	2"	4"	No	Yes
P-2	URINAL : VITREOUS CHINA SIPHON JET URINAL WITH 3/4' TOP SPUD INLET, 2" I.P.S. OUTLET AND 1.0 GPF MANUAL FLUSH VALVE. MOUNT WITH LIP OF URINAL AT 24" ABOVE FINISHED FLOOR. PROVIDE FLOOR MOUNTED WALL CARRIER.	3/4"	-	2"	2"	No	Yes
P-2A	URINAL - ADA COMPLIANT : VITREOUS CHINA SIPHON JET URINAL WITH 3/4' TOP SPUD INLET, 2" I.P.S. OUTLET AND 1.0 GPF MANUAL FLUSH VALVE. MOUNT WITH LIP OF URINAL AT 16" ABOVE FINISHED FLOOR. CONTROLS SHALL BE A MAXIMUM OF 39" ABOVE FINISHED FLOOR. PROVIDE FLOOR MOUNTED WALL CARRIER.	3/4"	-	2"	2"	No	Yes
P-3	LAVATORY - UNDERCOUNTER, OVAL, ADA COMPLIANT : VITREOUS CHINA, 15"X12" OVAL UNDER COUNTER MOUNTED LAVATORY, WITH MOUNTING CLAMP ASSEMBLY AND FRONT OVERFLOW. PROVIDE WITH RIGID 8" HIGH CHROME PLATED SINGLE LEVER FAUCET, GRID DRAIN, 3/8" ANGLE SUPPLIES WITH STOPS, KENTUCKY CODE P-TRAP, TAILPIECE AND ESCUTCHEONS. PROVIDE ON THE EXPOSED WASTE PIPE AND WATER SUPPLY LINES A TRAP-WRAP INSULATION KIT WITH A VINYL PLASTIC COVERING.	1/2"	1/2"	2"	2"	No	Yes
P-4	MOP BASIN : 24"X24"X10" HIGH MOLDED STONE MOP SERVICE BASIN, IN WHITE DRIFT COLOR, 3" DRAIN, SERVICE FAUCET, HOSE AND HOSE BRACKET, VINYL BUMPERGUARD AND STAINLESS STEEL WALL GUARDS. THE DRAIN SHALL BE LOCATED 12" TO THE CENTER. PROVIDE A CHECK VALVE IN THE HOT AND COLD WATER SUPPLIES.	3/4"	3/4"	2"	3"	Yes	Yes
P-5	DRINKING FOUNTAIN WITH BOTTLE FILLER - ADA COMPLIANT - ELKAY, AMBIENT, VANDAL RESISTANT OR EQUIVALENT. SENSOR ACTIVATION BOTTLE FILLER, BARRIER FREE DRINKING FOUNTAIN, 18 GAUGE STAINLESS STEEL BASIN, WITH FRONT PUSH BUTTON OPERATOR, WALL MOUNTED WITH CARRIER. REFER TO ARCHIECHTURAL PLANS FOR MOUNTING HEIGHTS.	1/2"	-	2"	2"	Yes	Yes
P-6	WATER SUPPLY WALL BOX : 10"X 8-1/2" RECESSED WATER VALVE BOX, 18 GAUGE STEEL BOX WITH A SINGLE 1/2" WATER SUPPLY INLET, ANGLE STOP AND 1/4" COMPRESSION OUTLET.	1/2"	-	-	-	Yes	Yes
P-7	LAVATORY - COUNTER TOP - ADA COMPLIANT : VITREOUS CHINA, 19"X16" OVAL COUNTERTOP LAVATORY, SELF-RIMMING WITH FRONT OVERFLOW. PROVIDE WITH A .5 GPM SINGLE LEVER FAUCET, GRID DRAIN, 3/8" ANGLE SUPPLIES WITH STOPS, KENTUCKY CODE P-TRAP, TAILPIECE AND ESCUTCHEONS. INSTALL ON THE SUPPLY LINES AND P-TRAP AN INSULATION KIT WITH A VINYL PLASTIC COVERING.	1/2"	1/2"	2"	2"	Yes	Yes

APPLICABLE BUILDING CODES

APPLICABLE BUILDING CODES	DOCUMENT	YEAR
ACCESSIBLE AND USEABLE BUILDINGS AND FACILITIES	ANSI A117.1	2009
FIRE SPRINKLER CODE	NFPA 13	2013
INTERNATIONAL BUILDING CODE (IBC)	STATE EDITION	2015
INTERNATIONAL ENERGY CONSERVATION CODE (IECC)	STATE EDITION	2012
INTERNATIONAL FIRE CODE (IFC)	STATE EDITION	2015
INTERNATIONAL FUEL GAS CODE (IFGC)	STATE EDITION	2015
INTERNATIONAL MECHANICAL CODE (IMC)	STATE EDITION	2015
INTERNATIONAL PLUMBING CODE (IPC)	STATE EDITION	2015
INTERNATIONAL EXISTING BUILDING CODE (IEBC)	STATE EDITION	2009
NATIONAL ELECTRIC CODE (NEC)	NFPA 70	2017
NATIONAL FIRE ALARM & SIGNALING CODE	NFPA 72	2013
UNIFORM STATEWIDE BUILDING CODE		2018

Sheet List - Plumbing

SHEET #	SHEET NAME
P-101	PLUMBING LEGEND
P-201	OVERALL PLUMBING PLAN
P-202	ENLARGED PLUMBING PLANS
P-301	RISER
P-401	PLUMBING SCHEDULES AND DETAILS

JRA architects

3225 Summit Square Place, Suite 200
Lexington, Kentucky 40509
859.252.6781

NOT FOR CONSTRUCTION

RESERVED FOR AHJ STAMP

CMTA

RFP 2 DRAWINGS

UK INDOOR TRACK FACILITY

UNIVERSITY OF KENTUCKY
LEXINGTON, KENTUCKY

PLUMBING

PROJECT	202258
DATE	8.31.22

REVISIONS

No.	Description	Date

JRA ARCHITECTS HAS RETAINED AN ELECTRONIC VERSION OF THESE DRAWINGS. THE CLIENT AGREES NOT TO REUSE THESE DRAWINGS - IN ELECTRONIC OR ANY OTHER FORMAT - IN WHOLE, OR IN PART, FOR ANY PURPOSE OTHER THAN FOR THE PROJECT. THE CLIENT AGREES NOT TO TRANSFER THESE ELECTRONIC FILES TO OTHERS WITHOUT THE PRIOR WRITTEN CONSENT OF THE ARCHITECT. THE CLIENT FURTHER AGREES TO WAIVE ALL CLAIMS AGAINST THE ARCHITECT RESULTING IN ANY WAY FROM ANY UNAUTHORIZED CHANGES TO OR REUSE OF THE ELECTRONIC FILES FOR ANY OTHER PROJECT BY ANYONE OTHER THAN THE ARCHITECT.

PLUMBING LEGEND

P-101

COPYRIGHT 2022 - JRA, INC.

8/31/2022 4:36:16 PM

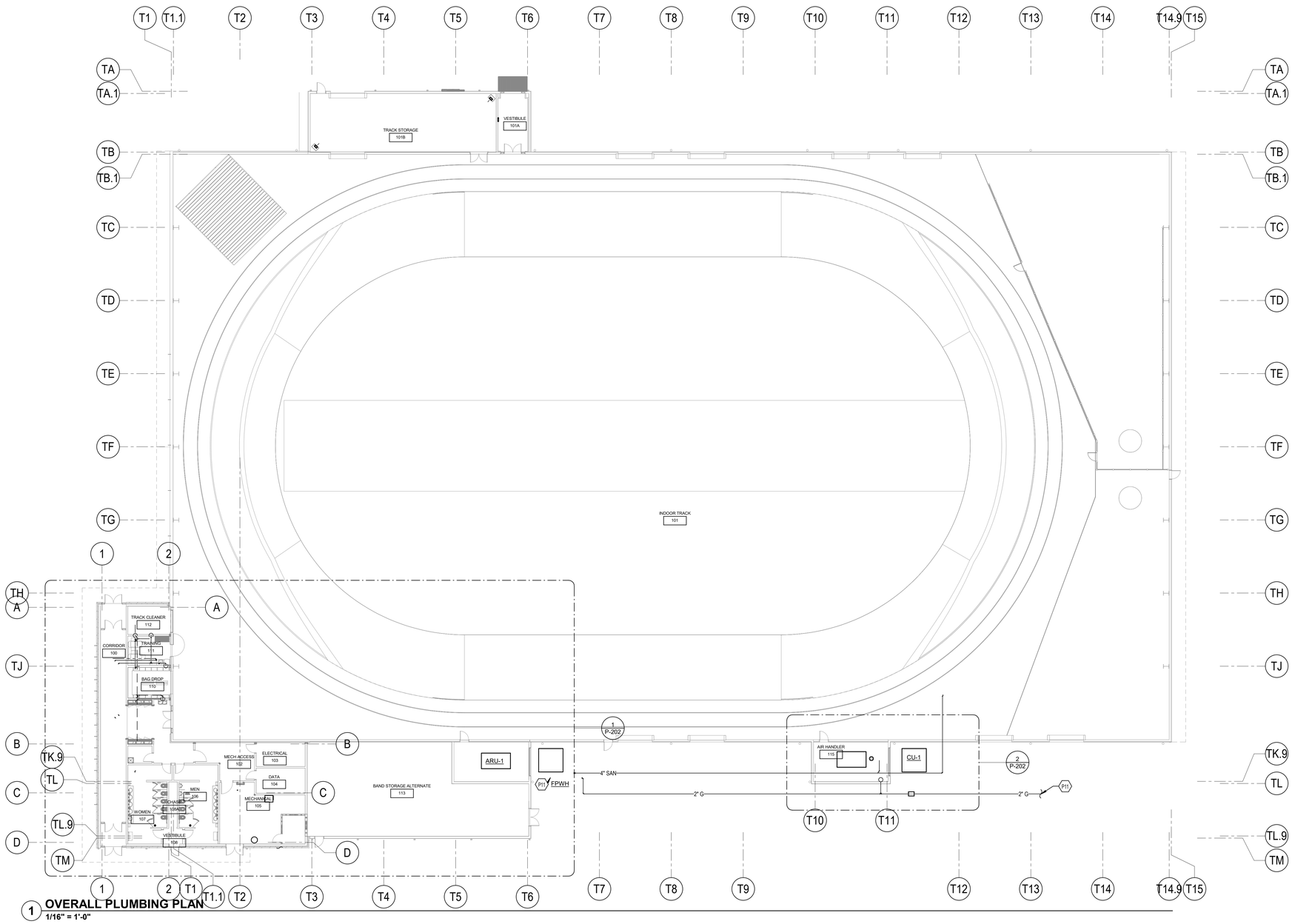

1 **OVERALL PLUMBING PLAN**
1/16" = 1'-0"

TAGGED NOTES

##

P11 REFER TO MECHANICAL SITE UTILITY PLAN FOR CONTINUATION.

JRA architects
3225 Summit Square Place, Suite 200
Lexington, Kentucky 40509
859.252.6781

NOT FOR CONSTRUCTION

RESERVED FOR AHJ STAMP

CMTA

RFP 2 DRAWINGS

UK INDOOR TRACK FACILITY

UNIVERSITY OF KENTUCKY
LEXINGTON, KENTUCKY

PLUMBING

PROJECT	202258
DATE	8.31.22

REVISIONS

No.	Description	Date

JRA ARCHITECTS HAS RETAINED AN ELECTRONIC VERSION OF THESE DRAWINGS. THE CLIENT AGREES NOT TO REUSE THESE DRAWINGS - IN ELECTRONIC OR ANY OTHER FORMAT - IN WHOLE, OR IN PART, FOR ANY PURPOSE OTHER THAN FOR THE PROJECT. THE CLIENT AGREES NOT TO TRANSFER THESE ELECTRONIC FILES TO OTHERS WITHOUT THE PRIOR WRITTEN CONSENT OF THE ARCHITECT. THE CLIENT FURTHER AGREES TO WAIVE ALL CLAIMS AGAINST THE ARCHITECT RESULTING IN ANY WAY FROM ANY UNAUTHORIZED CHANGES TO OR REUSE OF THE ELECTRONIC FILES FOR ANY OTHER PROJECT BY ANYONE OTHER THAN THE ARCHITECT.

OVERALL PLUMBING PLAN

P-201

COPYRIGHT 2022 - JRA, INC.

C:\Users\namos\Documents\XKTF22 Central File_nolanjamos.rvt
8/31/2022 4:36:20 PM

C:\Users\samos\Documents\XXTF22 Central File_nolanjamos.rvt

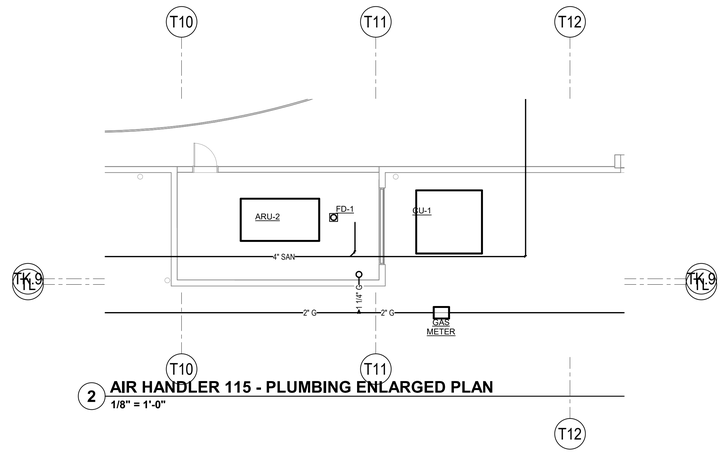

2 **AIR HANDLER 115 - PLUMBING ENLARGED PLAN**
1/8" = 1'-0"

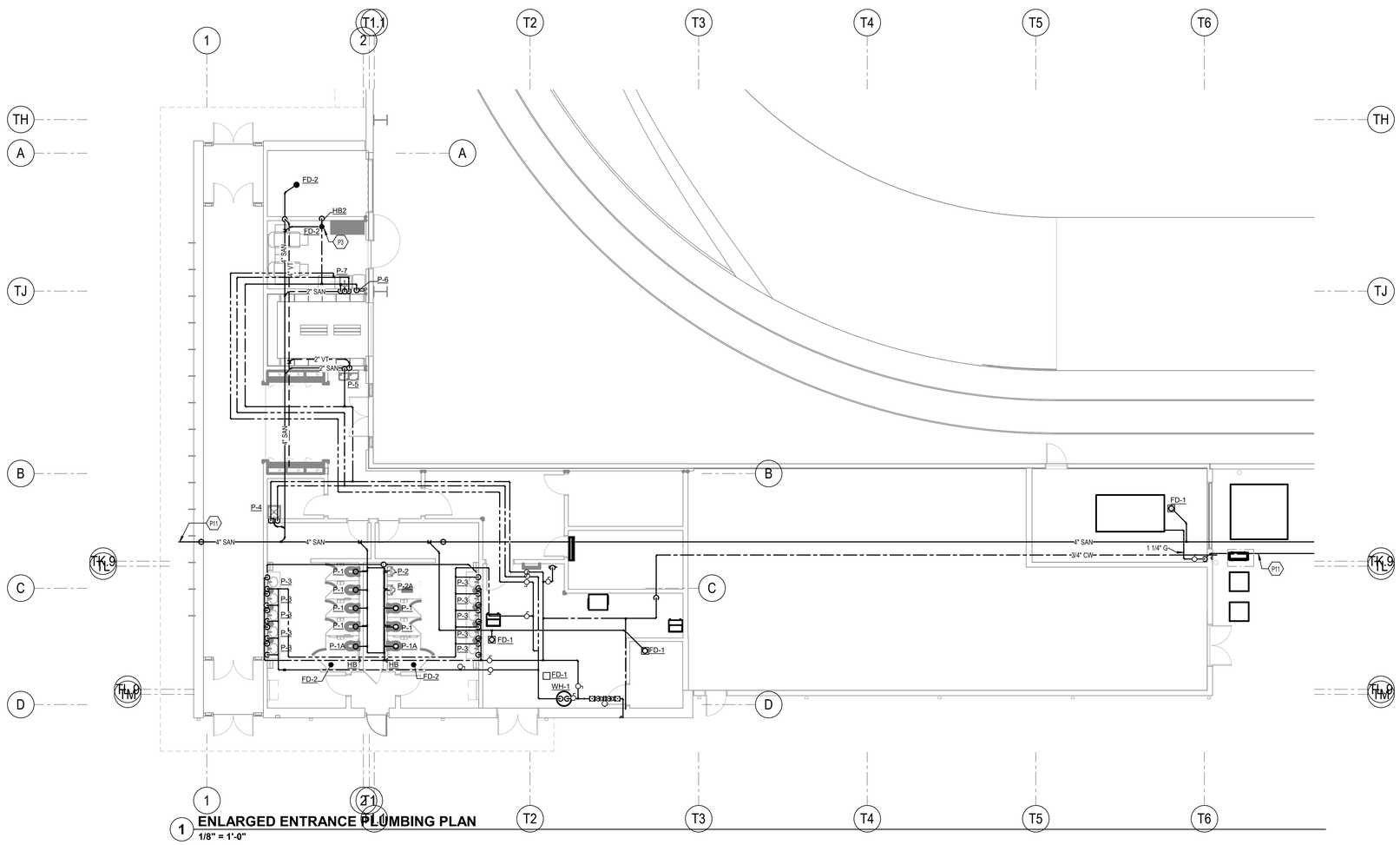

1 **ENLARGED ENTRANCE PLUMBING PLAN**
1/8" = 1'-0"

TAGGED NOTES

P3 COORDINATE LOCATION OF FLOOR DRAIN WITH ICE MAKER.
P11 REFER TO MECHANICAL SITE UTILITY PLAN FOR CONTINUATION.

JRA architects
3225 Summit Square Place, Suite 200
Lexington, Kentucky 40509
859.252.6781

NOT FOR CONSTRUCTION

RESERVED FOR AHJ STAMP

CMTA

RFP 2 DRAWINGS

UK INDOOR TRACK FACILITY
UNIVERSITY OF KENTUCKY
LEXINGTON, KENTUCKY

PLUMBING

PROJECT	202258
DATE	8.31.22

REVISIONS

No.	Description	Date

JRA ARCHITECTS HAS RETAINED AN ELECTRONIC VERSION OF THESE DRAWINGS. THE CLIENT AGREES NOT TO REUSE THESE DRAWINGS - IN ELECTRONIC OR ANY OTHER FORMAT - IN WHOLE, OR IN PART, FOR ANY PURPOSE OTHER THAN FOR THE PROJECT. THE CLIENT AGREES NOT TO TRANSFER THESE ELECTRONIC FILES TO OTHERS WITHOUT THE PRIOR WRITTEN CONSENT OF THE ARCHITECT. THE CLIENT FURTHER AGREES TO WAIVE ALL CLAIMS AGAINST THE ARCHITECT RESULTING IN ANY WAY FROM ANY UNAUTHORIZED CHANGES TO OR REUSE OF THE ELECTRONIC FILES FOR ANY OTHER PROJECT BY ANYONE OTHER THAN THE ARCHITECT.

ENLARGED PLUMBING PLANS

P-202

COPYRIGHT 2022 - JRA, INC.

8/31/2022 4:38:24 PM

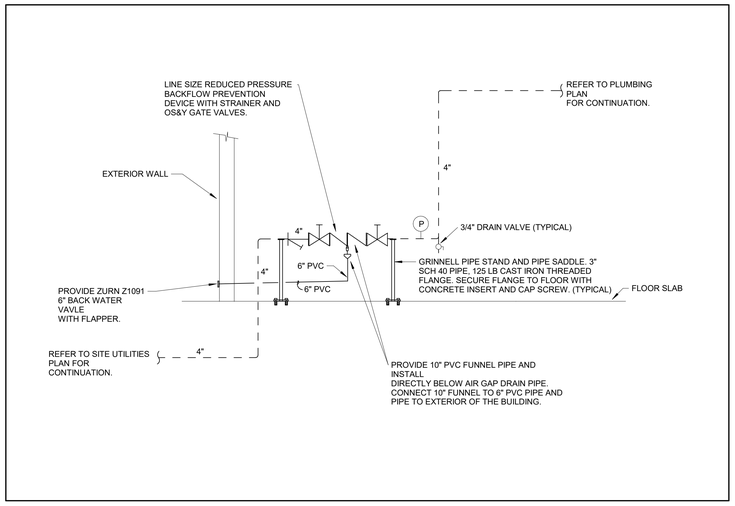

3 DOMESTIC WATER ENTRANCE SCHEMATIC
NOT TO SCALE

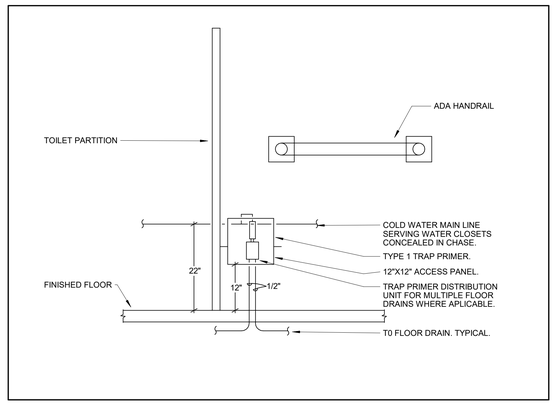

2 TRAP PRIMER DETAIL (ELEVATION)
NOT TO SCALE

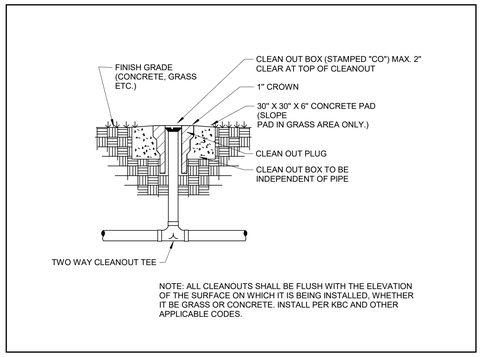

1 EXTERIOR CLEANOUT DETAIL
NOT TO SCALE

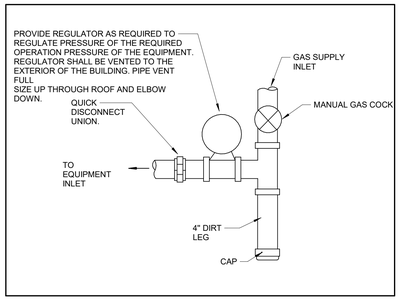

4 TYPICAL GAS CONNECTION DETAIL
NOT TO SCALE

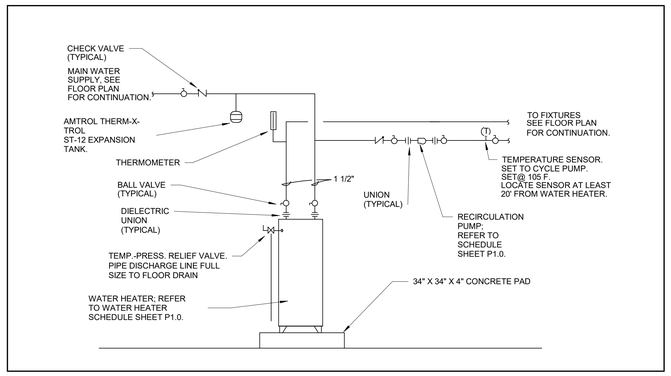

5 SINGLE WATER HEATER WITH RECIRC - PIPING SCHEMATIC
NOT TO SCALE

JRA architects
3225 Summit Square Place, Suite 200
Lexington, Kentucky 40509
859.252.6781

NOT FOR CONSTRUCTION

RESERVED FOR AHJ STAMP

CMTA

RFP 2 DRAWINGS

UK INDOOR TRACK FACILITY
UNIVERSITY OF KENTUCKY
LEXINGTON, KENTUCKY

PLUMBING

PROJECT	202258
DATE	8.31.22

REVISIONS

No.	Description	Date

JRA ARCHITECTS HAS RETAINED AN ELECTRONIC VERSION OF THESE DRAWINGS. THE CLIENT AGREES NOT TO REUSE THESE DRAWINGS - IN ELECTRONIC OR PAPER FORM - IN WHOLE OR IN PART, FOR ANY PURPOSE OTHER THAN FOR THE PROJECT. THE CLIENT AGREES NOT TO TRANSFER THESE ELECTRONIC FILES TO OTHERS WITHOUT THE PRIOR WRITTEN CONSENT OF THE ARCHITECT. THE CLIENT FURTHER AGREES TO WAIVE ALL CLAIMS AGAINST THE ARCHITECT RESULTING IN ANY WAY FROM ANY UNAUTHORIZED CHANGES TO OR REUSE OF THE ELECTRONIC FILES FOR ANY OTHER PROJECT BY ANYONE OTHER THAN THE ARCHITECT.

PLUMBING SCHEDULES AND DETAILS

P-401

COPYRIGHT 2022 - JRA, INC.

C:\Users\samos\Documents\XXTF22 Central File_solanijamos.rvt
8/31/2022 4:36:31 PM

C:\Users\namos\Documents\XKTF22 Central File_nolanjamos.rvt

MECHANICAL GENERAL NOTES

A COORDINATE THE LOCATION OF DRAINS, THERMOSTATS, GAS OUTLETS, ETC., WITH ALL CASEWORK EQUIPMENT, MECHANICAL ROOM EQUIPMENT, ETC., PRIOR TO COMMENCING INSTALLATION. WORK NOT SO COORDINATED SHALL BE REMOVED AND PROPERLY INSTALLED AT THE EXPENSE OF THE CONTRACTOR.

B THE CONTRACTOR SHALL EXERCISE EXTREME CARE IN THE COURSE OF THEIR WORK SO AS TO ENSURE THAT THEY DO NOT INTERRUPT ANY EXISTING SERVICE. FOR SAFETY PURPOSES, PAY PARTICULAR ATTENTION TO THIS PRECAUTION RELATIVE TO NATURAL GAS AND ELECTRICAL LINES. VERIFY THE LOCATION, SIZE, TYPE, ETC., OF EACH UNDERGROUND OR OVERHEAD UTILITY. ALL WORK SHALL BE PERFORMED IN ACCORD WITH ALL FEDERAL, STATE AND/OR LOCAL RULES, REGULATIONS, STANDARD AND SAFETY REQUIREMENTS. UTILITIES SHALL BE INSTALLED IN ACCORD WITH THE APPLICABLE MUNICIPALITY OR UTILITY COMPANY STANDARDS. IN ALL CASES, THE MOST STRINGENT REQUIREMENT SHALL APPLY.

C WHERE WORK IS REQUIRED ABOVE EXISTING LAY-IN, PLASTER OR GYPSUM BOARD CEILINGS, THE CONTRACTOR SHALL BE RESPONSIBLE FOR REMOVAL AND REINSTALLATION (OR REPLACEMENT, IF DAMAGED) OF ALL CEILING OR TILE AND GRID MEMBERS NECESSARY TO PERFORM HIS WORK. NEW TILE AND GRID SHALL MATCH THE SURROUNDING AREAS. ALL PATCHING WORK SHALL MATCH ADJACENT SURFACES.

D ALL NEW WORK SHALL BE HUNG FROM STRUCTURE, NOT FROM THE WORK OF OTHER TRADES, WHETHER EXISTING OR NEW.

E COORDINATE ALL WORK WITH PROJECT PHASING REQUIREMENTS.

F PATCH, REPAIR AND PAINT OR PROVIDE WALL COVERING FOR (TO OWNER'S STANDARDS) EXISTING WALLS, CEILINGS, ETC., THAT ARE TO REMAIN IF DAMAGED DURING CONSTRUCTION. REPAIRS SHALL MATCH ADJACENT SURFACES TO THE SATISFACTION OF THE ARCHITECT AND OWNER.

G OBSERVE ALL APPLICABLE CODES, RULES AND REGULATIONS THAT MAY APPLY TO THE WORK UNDER THIS CONTRACT. (CITY, COUNTY, LOCAL, FEDERAL, MUNICIPALITY, UTILITY COMPANY, COMMONWEALTH OF KENTUCKY, ETC.)

H CONTRACTOR SHALL BE AWARE OF UNSEEN PLUMBING, HVAC AND ELECTRICAL WORK DURING DEMOLITION. IF ITEMS ARE UNCOVERED DURING DEMOLITION THEN FIELD VERIFY THE USE OF THE ITEMS AND PLAN AN ALTERNATE ROUTE TO RUN THESE ITEMS. THEN CONTACT THE ENGINEERS TO REVIEW THE ROUTING.

I WHERE FIRE PROOFING IS SPRAYED ON EXISTING STRUCTURE ALL EXISTING CONDUITS, WATER, HYDRONIC, STEAM, CHILLED WATER, FIRE PROTECTION LINES, MED GAS, ETC. SHALL BE LOWERED TO BE BELOW FULL THICKNESS OF FIRE PROOFING WITH NO INTERFERENCE.

J ALL PENETRATIONS OF FIRE AND SMOKE RATED ASSEMBLIES SHALL BE APPROPRIATELY FIRE STOPPED PER AN APPROVED U.L. LISTED STANDARD. CONTRACTOR SHALL PAY PARTICULAR ATTENTION TO INSULATED PIPING PENETRATIONS.

K ALL WORK REQUIRING DOWNTIME OF ANY AREA IN THE BUILDING SHALL BE SCHEDULED 2 WEEKS IN ADVANCE, AND SHALL COMPLY WITH INTERIM LIFE SAFETY MEASURES.

L ALL DUCTWORK, PIPING, CONDUITS, ETC. IN ROOMS WITH CEILINGS SHALL BE ABOVE CEILING EXCEPT AS NOTED.

M INSTALL AIR VENTS AT HIGH POINTS IN PIPING AND DRAINS IN LOW POINTS. USE CARE TO AVOID FREEZING OF EXTERIOR VENTS.

N LOCATIONS OF PIPING, DUCTS AND EQUIPMENT ARE APPROXIMATE AND SUBJECT TO MINOR ADJUSTMENTS IN THE FIELD. DO NOT SCALE THE DRAWINGS.

O ALL OFFSETS IN DUCTS AND PIPING ARE NOT NECESSARILY SHOWN. PROVIDE ADDITIONAL OFFSETS WHERE NECESSARY.

P COORDINATE ALL HVAC WORK WITH ELECTRICAL, PLUMBING AND OTHER TRADES TO AVOID INTERFERENCE WITH PIPING, DUCTS, CONDUIT AND OTHER EQUIPMENT.

Q INSTALL ALL PIPING, DUCTWORK AND EQUIPMENT IN STRICT ACCORDANCE WITH MANUFACTURER'S INSTALLATION INSTRUCTION. IF IN CONFLICT WITH THE DESIGN INDICATED IN CONTRACT DOCUMENTS, ADVISE THE ENGINEERS PRIOR TO INSTALLATION FOR CLARIFICATION. PROVIDE RECOMMENDED ACCESS AND SERVICE CLEARANCES FOR ALL EQUIPMENT.

R SEAL AIRTIGHT AROUND ALL DUCTS AND PIPING PENETRATIONS THROUGH WALLS, FLOORS AND ROOF. PROVIDE FIRE STOPPING IN FIRE PARTITION.

S SEAL ALL NEW DUCTWORK JOINTS WITH UNITED MCGILL, IRONGRIP 6O1 OR EQUAL WATER BASED SEALANT.

T ALL MOTOR DRIVEN EQUIPMENT SHALL BE INSTALLED WITH FLEXIBLE CONNECTIONS TO DUCTWORK, PIPING, ETC., UNLESS OTHERWISE NOTED.

U THE CONTRACTOR SHALL RELOCATE OR AVOID ANY EXISTING EQUIPMENT APPURTENANCES, ETC., THAT CONFLICT WITH NEW WORK.

V WHERE MOUNTING HEIGHTS ARE NOT INDICATED OR ARE IN CONFLICT WITH ANY OTHER BUILDING SYSTEM, CONTACT THE ENGINEERS BEFORE INSTALLATION. REFER ALSO TO ARCHITECTURAL WALL INTERIOR AND EXTERIOR WALL ELEVATIONS, CEILING HEIGHTS AND OTHER DETAIL OF THESE DOCUMENTS.

W DOUBLE WIDTH TURNING VANES SHALL BE INSTALLED IN ALL SUPPLY, RETURN, AND EXHAUST DUCTWORK ELBOWS. TURNING VANES NOT REQUIRED FOR KITCHEN EXHAUSTS.

X ANY VIBRATING, OSCILLATING OR OTHER NOISE OR MOTION PRODUCING EQUIPMENT SHALL BE ISOLATED FROM SURROUNDING SYSTEMS IN AN APPROVED MANNER. NOISY OR STRUCTURALLY DAMAGING INSTALLATIONS SHALL BE SATISFACTORILY REPLACED OR REPAIRED AT THE INSTALLING CONTRACTOR'S EXPENSE. THE FINAL DECISION ON THE SUITABILITY OF A PARTICULAR INSTALLATION'S ACCEPTABILITY SHALL BE THAT OF THE ENGINEER.

Y DEVIATIONS IN SIZE, CAPACITIES, FIT, FINISH, ETC. FOR EQUIPMENT FROM THAT USED AS BASIS OF DESIGN SHALL BE THE RESPONSIBILITY OF THE PURCHASER OF THAT EQUIPMENT. ANY PROVISIONS REQUIRED TO ACCOMMODATE A DEVIATION, WHETHER APPROVED BY THE ENGINEERS OR NOT, SHALL BE THE RESPONSIBILITY OF THE PURCHASER.

Z VALVES, BALANCING DAMPERS OR ANY MECHANICAL/ELECTRICAL ITEM REQUIRING ACCESS SHALL NOT BE LOCATED ABOVE A HARD CEILING. IF THIS IS NOT POSSIBLE, THEN AN APPROPRIATELY SIZED ACCESS DOOR SHALL BE PLACED UNDER THE ITEM TO ALLOW EASY MAINTENANCE AND ADJUSTMENT. ADDITIONALLY ALL SUCH ITEMS SHALL NOT BE LOCATED AN UNREASONABLE DISTANCE ABOVE THE CEILINGS. IN GENERAL ALL SUCH ITEMS UNLESS INDICATED OTHERWISE SHALL BE MOUNTED SIX TO TWELVE INCHES ABOVE THE CEILING. IF IN DOUBT, CONTACT ENGINEER PRIOR TO INSTALLING.

AA ALL MANHOLES, VAULTS AND SIMILAR UNDERGROUND STRUCTURES SHALL HAVE THE TOP ELEVATION SET FLUSH WITH FINISHED GRADE UNLESS SPECIFICALLY NOTED OTHERWISE.

AB WORK IN CONFINED AREAS SHALL BE IN ACCORDANCE WITH THE OWNER'S SAFETY POLICY REQUIREMENTS.

MECHANICAL PHASING NOTES

A THIS PROJECT INTERFACES EXTENSIVELY WITH EXISTING BUILDING SERVICES. IT SHALL BE THE CONTRACTOR'S RESPONSIBILITY TO COORDINATE AND PHASE ALL TIE-INS AND INTERRUPTIONS OF EXISTING SERVICES TO MINIMIZE OR ELIMINATE DOWNTIME. AS AN EXAMPLE, MAIN GAS SERVICE, WATER SERVICE, ELECTRICAL SERVICE, HVAC SERVICES, STEAM GENERATION, ETC., WILL BE AFFECTED AND REPLACED OR MOVED DURING THIS PROJECT. THE CONTRACTOR SHALL INSTALL ALL NEW SERVICES AND EQUIPMENT AND HAVE THEM TESTED AND FULLY AND RELIABLY FUNCTIONAL PRIOR TO INTERRUPTING, RELOCATING OR REMOVING ANY EXISTING SERVICES. IT SHALL BE THE CONTRACTOR'S RESPONSIBILITY TO BARE ANY AND ALL COSTS ASSOCIATED WITH THIS PHASING, INCLUDING TEMPORARY SERVICES, TEMPORARY RELOCATION, PREMIUM TIME WORK, ETC. CONTRACTOR SHALL COORDINATE ALL SAID WORK WITH THE OWNER AND APPLICABLE UTILITIES PER THE CONTRACT DOCUMENTS.

ABBREVIATIONS

AC	ALTERNATING CURRENT
ADJ	ADJUSTABLE
AFF	ABOVE FINISHED FLOOR
AFR	ABOVE FINISHED ROOF
AFUE	ANNUAL FUEL UTILIZATION EFFICIENCY
AHJ	AUTHORITY HAVING JURISDICTION
AMP	AMPERE (AMP, AMPS)
ANSI	AMERICAN NATIONAL STANDARD INSTITUTE
APD	AIR PRESSURE DROP
ASHRAE	AMERICAN SOCIETY OF HEATING, REFRIGERATION, AND AIR-CONDITIONING ENGINEERS
ATU	AIR TERMINAL UNIT
AVG	AVERAGE
BAS	BUILDING AUTOMATION SYSTEM
BHP	BREAK HORSEPOWER
BTU	BRITISH THERMAL UNIT
CAP	CAPACITY
CAV	CONSTANT AIR VOLUME
CD	CONDENSATE DRAIN
CFM	CUBIC FEET PER MINUTE
C.I.	CAST IRON
CLG	CEILING
CLR	CLEAR
CO	CARBON MONOXIDE
CO2	CARBON DIOXIDE
COND	CONDENS (-ER, -ING, -ATION, -ATE)
CONT	CONTINU (-ED, -OUS)
CU FT	CUBIC FEET
CU IN	CUBIC INCHES
CV	VALVE FLOW COEFFICIENT
dB	DECIBEL
DB	DRY BULB
DBT	DRY BULB TEMPERATURE
DC	DIRECT CURRENT
DD	DUCT SMOKE DETECTOR
DDC	DIRECT DIGITAL CONTROLS
DEG	DEGREE (-S)
DIA	DIAMETER (-S)
DN	DOWN
DWG	DRAWING
EAT	ENTERING AIR TEMPERATURE
EC	ELECTRICAL CONTRACTOR
ELEV	ELEVA (-TION, -TOR)
ENGR	ENGINEER
EQ	EQUAL
ESP	EXTERNAL STATIC PRESSURE
ETR	EXISTING TO REMAIN
EVAP	EVAPORAT (-E, -ING, -ED, -OR, -ION)
EWT	ENTERING WATER TEMPERATURE
EXP	EXPANSION
EXT	EXTERIOR
FA	FREE AREA

ABBREVIATIONS (CONTINUED)

FD	FIRE DAMPER
FL	FLOOR
FLA	FULL LOAD AMPS
FOB	FLAT ON BOTTOM
FOT	FLAT ON TOP
FPC	FIRE PROTECTION CONTRACTOR
FPM	FEET PER MINUTE
FPS	FEET PER SECOND
FT	FEET **OR** FOOT
FUT	FUTURE
FV	FACE VELOCITY
GA	GAGE/GAUGE
GAL	GALLON (-S)
GC	GENERAL CONTRACTOR
GPD	GALLONS PER DAY
GPH	GALLONS PER HOUR
GPM	GALLONS PER MINUTE
GR	GRAINS
H	HUMIDITY
HD	HEAD
HG	MERCURY
HORIZ	HORIZONTAL
HP	H (-ORSEPOWER, -EAT PUMP)
HR	HOUR (-S)
HVAC	HEATING, VENTILATING, & AIR-CONDITIONING
Hz	HERTZ
ID	I (-DENTIFICATION, -NSIDE DIAMETER, -NSIDE DIMENSION)
IN	INCH (-ES)
INSUL	INSULAT (-ED, -ION)
INT	INTER (-IOR, -ERVAL)
IPS	IRON PIPE SIZE
kW	KILOWATT
kWh	KILOWATT HOUR
LAT	LEAVING AIR TEMPERATURE
LBS	POUNDS
LF	LINEAR FEET/FOOT
LRA	LOCKED ROTOR AMPS
LWT	LEAVING WATER TEMPERATURE
MAX	MAXIMUM
MBH	BTU PER HOUR [THOUSANDS]
MCA	MINIMUM CIRCUIT AMPS
MFG	MANUFACTURER
MIN	MIN (-IMUM, -UTE)
MISC	MISCELLANEOUS
MOCP	MAXIMUM OVERCURRENT PROTECTION [AMPS]
MTG	MOUNTING
N/A	NOT APPLICABLE
NC	NOISE CRITERIA **OR** NORMALLY CLOSED
NEBB	NATIONAL ENVIRONMENTAL BALANCING BUREAU
NIC	NOT IN CONTRACT

ABBREVIATIONS (CONTINUED)

NO	NORMALLY OPEN **OR** NUMBER
NTS	NOT TO SCALE
OC	ON CENTER
OD	OUTSIDE DI (-AMETER, -MENSION)
CFCI	CONTRACTOR FURNISHED, CONTRACTOR INSTALLED
OFCI	OWNER FURNISHED, CONTRACTOR INSTALLED
OFOI	OWNER FURNISHED, OWNER INSTALLED
OR	OPEN RECEPTACLE
OZ	OUNCE (-S)
PC	PLUMBING CONTRACTOR
PD	PRESSURE DROP
PH	PHASE [ELECTRICAL]
PLBG	PLUMBING
PPM	PARTS PER MILLION
PRS	PRESSURE REDUCING STATION
PRV	PRESSURE REDUCING VALVE (STEAM, WATER, GAS)
PSF	POUNDS PER SQUARE FOOT
PSI	POUNDS PER SQUARE INCH
PSIG	PPSI GAUGE
RH	RELATIVE HUMIDITY [%]
RLA	RUNNING LOAD AMPS
RPM	REVOLUTIONS PER MINUTE
SD	SMOKE DAMPER
SP	STATIC PRESSURE
SQ	SQUARE
SQ FT	SQUARE FEET **OR** FOOT
SQ IN	SQUARE INCH **OR** INCHES
TAB	TESTING AND BALANCING
TBD	TO BE DETERMINED
TE	TOP ELEVATION
TEMP	TEMPERATURE
TSP	TOTAL STATIC PRESSURE
TYP	TYPICAL
UNO	UNLESS NOTED OTHERWISE
V	VOLT (-AGE, -S)
VAR	VARI (-ABLE, -IES)
VAV	VARIABLE AIR VOLUME
VEL	VELOCITY
VFD	VARIABLE FEQUENCY DRIVE
W	WATT (-AGE, -S)
WB	WET BULB
WBT	WET BULB TEMPERATURE
WPD	WATER PRESSURE DROP
WT	WEIGHT
W/	WITH
W/O	WITHOUT
%	PERCENT
ΔP	DIFFERENTIAL PRESSURE
ΔT	TEMPERATURE DIFFERENCE
℄	CENTERLINE

GENERAL SYMBOLS

#	TAGGED NOTE DESIGNATOR
X	REVISION TRIANGLE
ROOM NAME RM #	ROOM TAG
TAG XXX-# INSTANCE XXXX	EQUIPMENT TAG
	POINT OF CONNECTION / CONNECT TO EXISTING
	POINT OF DEMOLITION

HVAC LEGEND

	SUPPLY AIR DIFFUSER
	RETURN AIR DIFFUSER
	EXHAUST AIR DIFFUSER
	TRANSFER AIR DIFFUSER W/ SOUND ATTENUATING BOOT
	SIDEWALL DIFFUSER/GRILLE
	SIDEWALL DIFFUSER/GRILLE
TAG XXX AIRFLOW #,###	AIR DEVICE TAG (REGISTER, GRILLE, DIFFUSER,LOUVER)
##x##	RECTANGULAR DUCT
#ø	ROUND/SPIRAL DUCT
##/##	FLAT OVAL DUCT
SA	SUPPLY AIR DUCT
RA	RETURN AIR DUCT
EA	EXHAUST AIR DUCT
OA	OUTSIDE AIR DUCT
TA	TRANSFER AIR DUCT
CAE	COMBUSTION AIR EXHAUST DUCT
CAI	COMBUSTION AIR INTAKE DUCT
SA	SA AIR DUCT TURNING UP
SA	SA AIR DUCT TURNING DOWN
RA	RA AIR DUCT TURNING UP
RA	RA AIR DUCT TURNING DOWN
EA	EA AIR DUCT TURNING UP
EA	EA AIR DUCT TURNING DOWN
E(XXX)	EXISTING DUCT - (XXX) DENOTES SYSTEM
D(XXX)	DUCT TO BE DEMOLISHED - (XXX) DENOTES SYSTEM
A(XXX)	DUCT TO BE ABANDONED IN PLACE - (XXX) DENOTES SYSTEM
	MITERED ELBOW WITH TURNING VANES
	FLEXIBLE DUCT
T	THERMOSTAT
TS	TEMPERATURE SENSOR
H	HUMIDITY SENSOR
C	CARBON DIOXIDE SENSOR
TC	TEMPERATURE & CARBON DIOXIDE SENSOR
VERT. HORIZ.	MANUAL BALANCING/VOLUME DAMPER
VERT. HORIZ.	MOTORIZED DAMPER
VERT. HORIZ.	FIRE DAMPER
VERT. HORIZ.	SMOKE DAMPER
VERT. HORIZ.	COMBINATION FIRE & SMOKE DAMPER

MECHANICAL PIPING LEGEND

	PIPE ELBOW TURNING UP
	PIPE ELBOW TURNING DOWN
	PIPE TEE; CONNECTION ON TOP
	PIPE TEE; CONNECTION ON BOTTOM
	PIPE CAP
CD	CONDENSATE DRAIN
CHWS/R	CHILLED WATER SUPPLY/RETURN
D(XXX)	PIPING TO BE DEMOLISHED - (XXX) DENOTES SYSTEM
E(XXX)	EXISTING PIPING - (XXX) DENOTES SYSTEM
A(XXX)	ABANDONED IN PLACE PIPING - (XXX) DENOTES SYSTEM
	TWO-WAY CONTROL VALVE
	THREE-WAY CONTROL VALVE
	AUTOMATIC AIR VENT (AAV)
	MANUAL AIR VENT (MAV)
	MANUAL BALANCING VALVE (BV)
	BALL VALVE
	BUTTERFLY VALVE
	TRIPLE DUTY VALVE (TDV)
	STRAINER
	MANUAL ISOLATION VALVE
	GLOBE VALVE
	OS&Y (GATE) VALVE
	PRESSURE REDUCING VALVE (STEAM, GAS, WATER, ETC.)
	AUTO-FLOW CONTROL VALVE
	CHECK VALVE
	DOUBLE CHECK VALVE ASSEMBLY
	FLEXIBLE PIPE CONNECTION
	FLOW METER (VENTURI)
	PIPING UNION
FS	FLOW SWITCH
PS	PRESSURE SWTICH
TS	TAMPER SWITCH
	THERMOMETER
	PETE'S PLUG; TEMPERATURE/PRESSURE PORT

APPLICABLE BUILDING CODES

APPLICABLE BUILDING CODES	DOCUMENT	YEAR
ACCESSIBLE AND USEABLE BUILDINGS AND FACILITIES	ANSI A117.1	2009
FIRE SPRINKLER CODE	NFPA 13	2013
INTERNATIONAL BUILDING CODE (IBC)	STATE EDITION	2015
INTERNATIONAL ENERGY CONSERVATION CODE (IECC)	STATE EDITION	2012
INTERNATIONAL FIRE CODE (IFC)	STATE EDITION	2015
INTERNATIONAL FUEL GAS CODE (IFGC)	STATE EDITION	2015
INTERNATIONAL MECHANICAL CODE (IMC)	STATE EDITION	2015
INTERNATIONAL PLUMBING CODE (IPC)	STATE EDITION	2015
INTERNATIONAL EXISTING BUILDING CODE (IEBC)	STATE EDITION	2009
NATIONAL ELECTRIC CODE (NEC)	NFPA 70	2017
NATIONAL FIRE ALARM & SIGNALING CODE	NFPA 72	2013
UNIFORM STATEWIDE BUILDING CODE		2018

Sheet List - Mechanical

SHEET #	SHEET NAME
M-101	MECHANICAL LEGEND
M-201	MECHANICAL PLAN
M-202	ENLARGED ENTRANCE MECHANICAL PLAN
M-301	MECHANICAL PIPING PLAN
M-302	ENLARGED MECHANICAL ROOMS
M-401	MECHANICAL CONTROLS
M-501	MECHANICAL SCHEDULES AND DETAILS
MU-101	MECHANICAL SITE UTILITY PLAN

NOTE: NOT ALL SYMBOLS AND ABBREVIATIONS MAY BE USED ON THIS PROJECT

8/31/2022 4:35:51 PM

JRA architects
3225 Summit Square Place, Suite 200
Lexington, Kentucky 40509
859.252.6781

NOT FOR CONSTRUCTION

RESERVED FOR AHJ STAMP

CMTA

RFP 2 DRAWINGS

UK INDOOR TRACK FACILITY
UNIVERSITY OF KENTUCKY
LEXINGTON, KENTUCKY

MECHANICAL

PROJECT	202258
DATE	8.31.22

REVISIONS

No.	Description	Date

JRA ARCHITECTS HAS RETAINED AN ELECTRONIC VERSION OF THESE DRAWINGS. THE CLIENT AGREES NOT TO REUSE THESE DRAWINGS - IN ELECTRONIC OR ANY OTHER FORMAT - IN WHOLE, OR IN PART, FOR ANY PURPOSE OTHER THAN FOR THE PROJECT. THE CLIENT AGREES NOT TO TRANSFER THESE ELECTRONIC FILES TO OTHERS WITHOUT THE PRIOR WRITTEN CONSENT OF THE ARCHITECT. THE CLIENT FURTHER AGREES TO WAIVE ALL CLAIMS AGAINST THE ARCHITECT RESULTING IN ANY WAY FROM ANY UNAUTHORIZED CHANGES TO OR REUSE OF THE ELECTRONIC FILES FOR ANY OTHER PROJECT BY ANYONE OTHER THAN THE ARCHITECT.

MECHANICAL LEGEND

M-101

COPYRIGHT 2022 - JRA, INC.

C:\Users\samos\Documents\XXETF22 Central File_nolanjamos.rvt

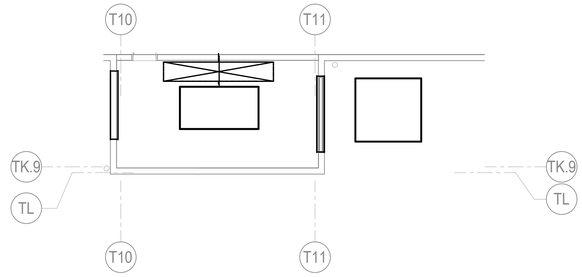

ENLARGED AIR DISTRIBUTION - AIR HANDLER
2 115
SCALE: 1/8" = 1'-0"
0 2' 4' 8' 16' 24' 32'

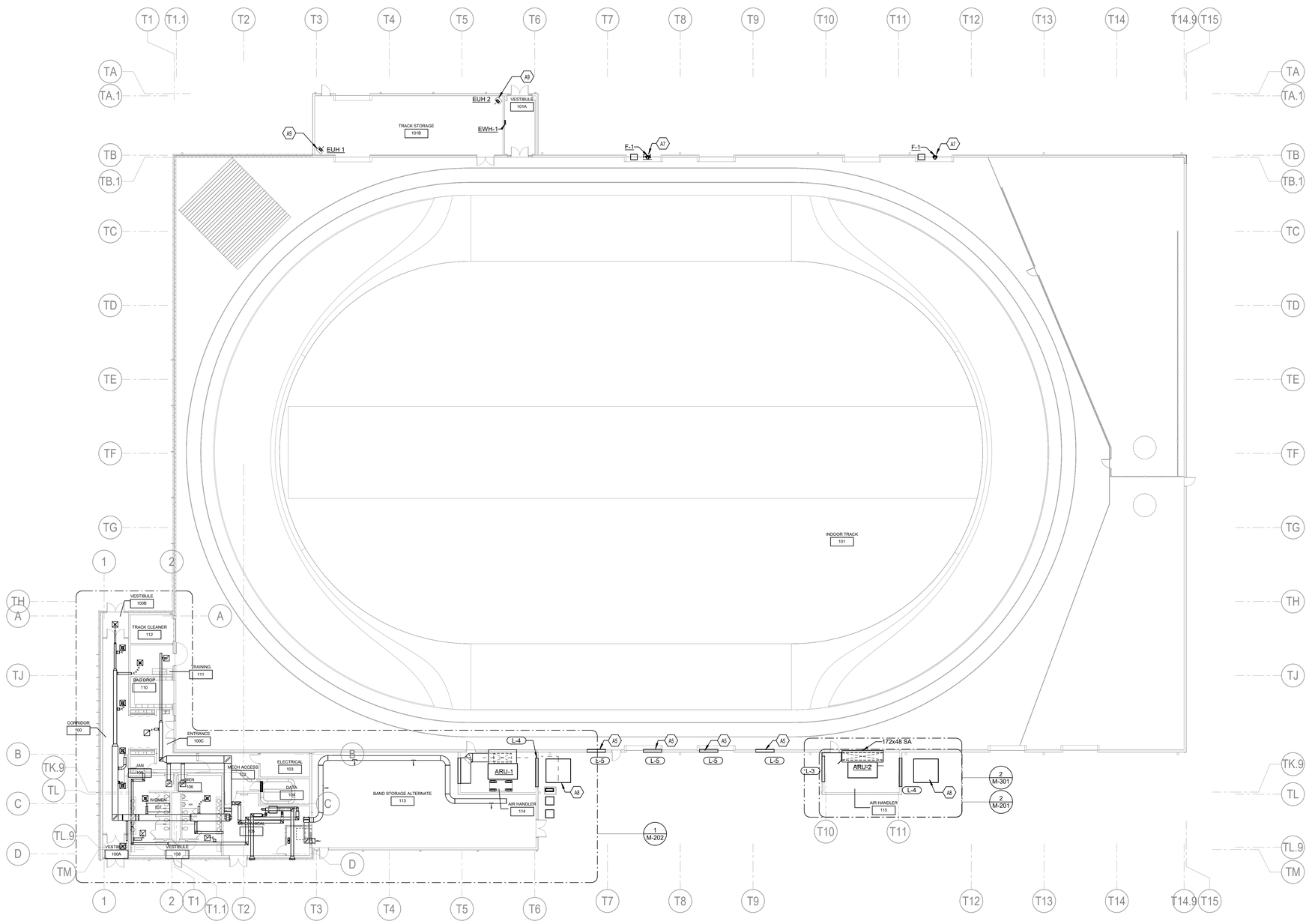

1 OVERALL MECHANICAL FLOOR PLAN
1/16" = 1'-0"

TAGGED NOTES

A5 NATURAL VENTILATION LOUVERS TO BE MOUNTED ABOVE WINDOWS. REFER TO ARCHITECTURAL ELEVATIONS. MECHANICAL DAMPERS ARE TO BE INSTALLED ON THE INSIDE OF THE LOUVERS. REFER TO CONTROLS FOR SEQUENCES.

A7 VENTILATION FAN TO BE MOUNTED IN WALL CENTERED OVER DOORWAY. REFER TO ARCHITECTURAL ELEVATIONS FOR MOUNTING HEIGHT.

A8 AIR ROTATION CONDENSING UNIT IN ALTERNATE 1.

A9 UNIT HEATER TO BE MOUNTED ON WALL. BOTTOM OF HEATER TO BE 8' AFF.

JRA architects
3225 Summit Square Place, Suite 200
Lexington, Kentucky 40509
859.252.6781

NOT FOR CONSTRUCTION

RESERVED FOR AHJ STAMP

CMTA

RFP 2 DRAWINGS

UK INDOOR TRACK FACILITY
UNIVERSITY OF KENTUCKY
LEXINGTON, KENTUCKY

MECHANICAL

PROJECT	202258
DATE	8.31.22

REVISIONS

No.	Description	Date

JRA ARCHITECTS HAS RETAINED AN ELECTRONIC VERSION OF THESE DRAWINGS. THE CLIENT AGREES NOT TO REUSE THESE DRAWINGS - IN ELECTRONIC OR ANY OTHER FORMAT - IN WHOLE, OR IN PART, FOR ANY PURPOSE OTHER THAN FOR THE PROJECT. THE CLIENT AGREES NOT TO TRANSFER THESE ELECTRONIC FILES TO OTHERS WITHOUT THE PRIOR WRITTEN CONSENT OF THE ARCHITECT. THE CLIENT FURTHER AGREES TO WAIVE ALL CLAIMS AGAINST THE ARCHITECT RESULTING IN ANY WAY FROM ANY UNAUTHORIZED CHANGES TO OR REUSE OF THE ELECTRONIC FILES FOR ANY OTHER PROJECT BY ANYONE OTHER THAN THE ARCHITECT.

MECHANICAL PLAN

M-201

COPYRIGHT 2022 - JRA, INC.

8/31/2022 4:35:54 PM

C:\Users\samos\Documents\XXTF22 Central File_nolanjamos.rvt

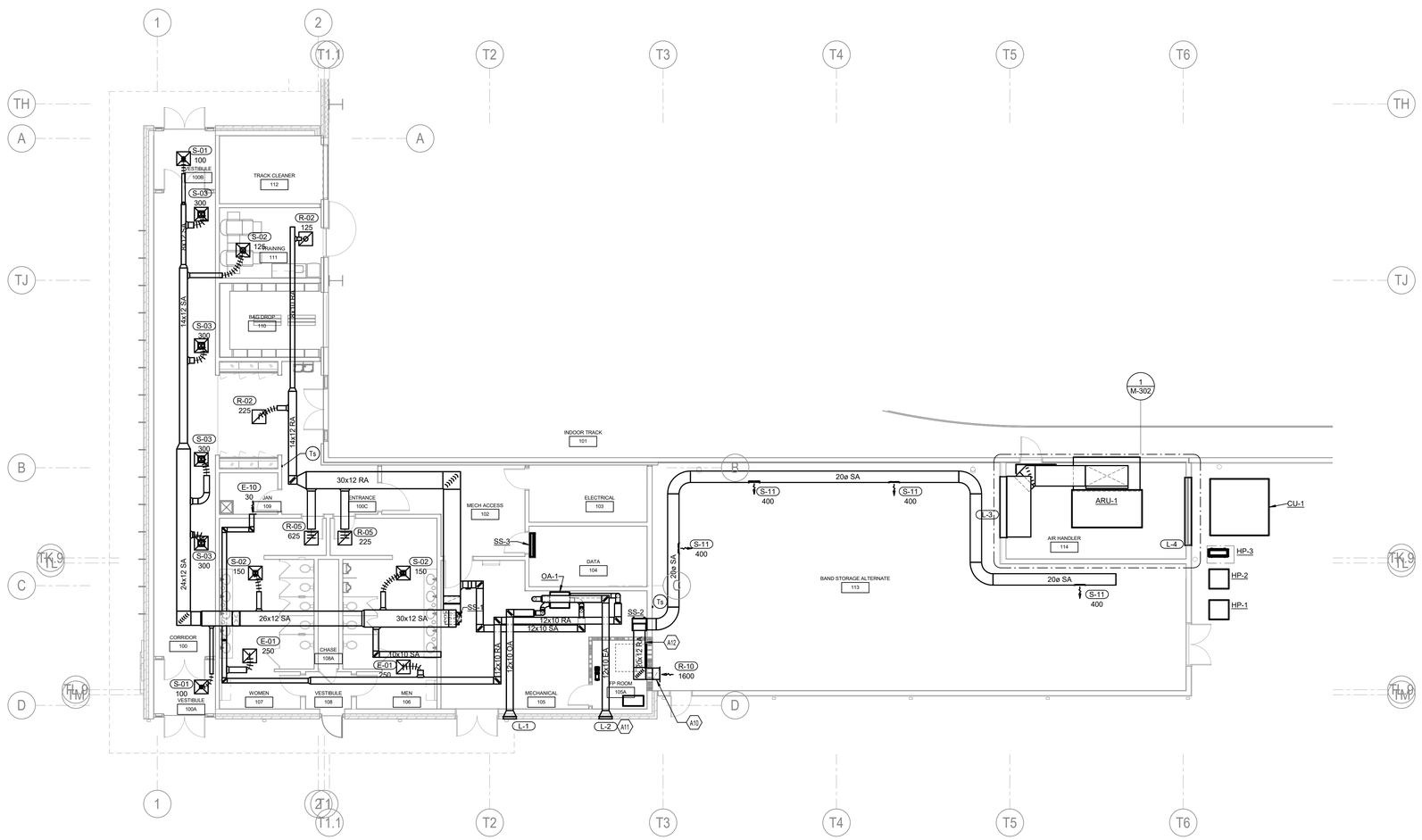

1 **ENLARGED ENTRANCE MECHANICAL PLAN**
1/8" = 1'-0"

TAGGED NOTES

A10 20"X12" RETURN AIR DUCT DOWN WALL TO 6" AFF. LOUVER TO ATTACH TO DUCTWORK.

A11 LOUVER TO BE MOUNTED IN EXTERIOR WALL. REFER TO ARCHITECTURAL ELEVATIONS FOR MOUNTING HEIGHT.

A12 RETURN AIR DUCTWORK TO BE ROUTED ABOVE FIRE RATED CEILING AND PENETRATE WALL TO STORAGE ROOM THROUGH NON-RATED WALL.

JRA architects
3225 Summit Square Place, Suite 200
Lexington, Kentucky 40509
859.252.6781

NOT FOR CONSTRUCTION

RESERVED FOR AHJ STAMP

CMTA

RFP 2 DRAWINGS

UK INDOOR TRACK FACILITY
UNIVERSITY OF KENTUCKY
LEXINGTON, KENTUCKY

MECHANICAL

PROJECT	202258
DATE	8.31.22

REVISIONS

No.	Description	Date

JRA ARCHITECTS HAS RETAINED AN ELECTRONIC VERSION OF THESE DRAWINGS. THE CLIENT AGREES NOT TO REUSE THESE DRAWINGS - IN ELECTRONIC OR ANY OTHER FORMAT - IN WHOLE, OR IN PART, FOR ANY PURPOSE OTHER THAN FOR THE PROJECT. THE CLIENT AGREES NOT TO TRANSFER THESE ELECTRONIC FILES TO OTHERS WITHOUT THE PRIOR WRITTEN CONSENT OF THE ARCHITECT. THE CLIENT FURTHER AGREES TO WAIVE ALL CLAIMS AGAINST THE ARCHITECT RESULTING IN ANY WAY FROM ANY UNAUTHORIZED CHANGES TO OR REUSE OF THE ELECTRONIC FILES FOR ANY OTHER PROJECT BY ANYONE OTHER THAN THE ARCHITECT.

ENLARGED ENTRANCE MECHANICAL PLAN

M-202

COPYRIGHT 2022 - JRA, INC.

8/31/2022 4:35:57 PM

C:\Users\samos\Documents\XXETF22 Central File_nolanjamos.rvt

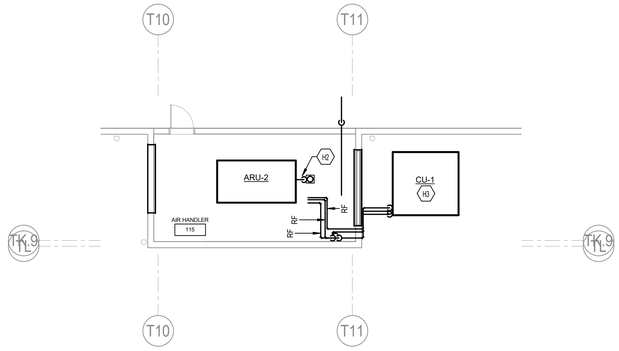

2 ENLARGED PIPING PLAN 115

1/8" = 1'-0"

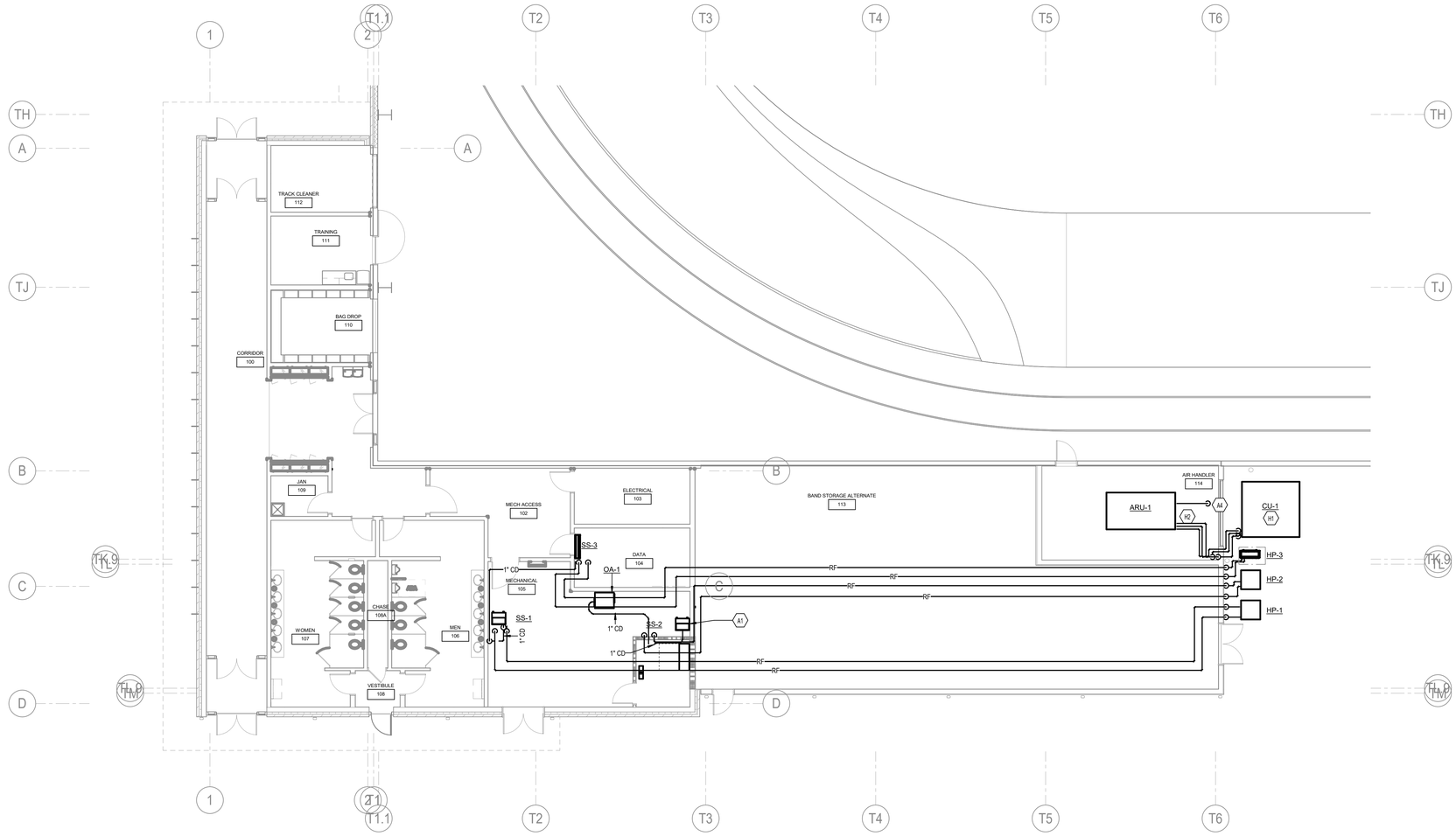

1 MECHANICAL PIPING PLAN

1/8" = 1'-0"

TAGGED NOTES

A1	MECHANICAL EQUIPMENT TO BE LOCATED ON 4" CONCRETE PAD.
A4	COOLING COILS CONDENSING UNIT AND ALL ASSOCIATED REFRIGERANT PIPING SHALL BE INCLUDED AS AN ALTERNATE.
H1	CONDENSING UNIT TO BE LOCATED ON A 4" HOUSEKEEPING PAD.
H2	2" CONDENSATE DRAIN TO BE ROUTED TO TURN DOWN INTO FLOOR DRAIN. CONDENSATE PIPING IS TO BE INCLUDED IN ALTERNATE #1.
H3	CONDENSING UNIT, HOUSEKEEPING PAD, REFRIGERANT PIPING, AND COOLING COIL ARE TO BE INCLUDED IN ALTERNATE #1.

JRA architects
3225 Summit Square Place, Suite 200
Lexington, Kentucky 40509
859.252.6781

NOT FOR CONSTRUCTION

RESERVED FOR AHJ STAMP

CMTA

RFP 2 DRAWINGS

UK INDOOR TRACK FACILITY

UNIVERSITY OF KENTUCKY
LEXINGTON, KENTUCKY

MECHANICAL

PROJECT	202258
DATE	8.31.22

REVISIONS

No.	Description	Date

JRA ARCHITECTS HAS RETAINED AN ELECTRONIC VERSION OF THESE DRAWINGS. THE CLIENT AGREES NOT TO REUSE THESE DRAWINGS - IN ELECTRONIC OR ANY OTHER FORMAT - IN WHOLE, OR IN PART, FOR ANY PURPOSE OTHER THAN FOR THE PROJECT. THE CLIENT AGREES NOT TO TRANSFER THESE ELECTRONIC FILES TO OTHERS WITHOUT THE PRIOR WRITTEN CONSENT OF THE ARCHITECT. THE CLIENT FURTHER AGREES TO WAIVE ALL CLAIMS AGAINST THE ARCHITECT RESULTING IN ANY WAY FROM ANY UNAUTHORIZED CHANGES TO OR REUSE OF THE ELECTRONIC FILES FOR ANY OTHER PROJECT BY ANYONE OTHER THAN THE ARCHITECT.

MECHANICAL PIPING PLAN

M-301

COPYRIGHT 2022 - JRA, INC.

8/31/2022 4:36:01 PM

C:\Users\samos\Documents\XXTF22 Central File_nolanjamos.rvt

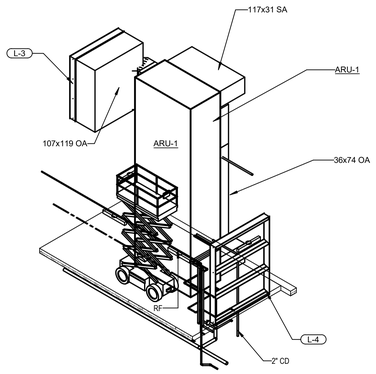

3 AIR HANDLER 114 ISOMETRIC
SCALE: NONE

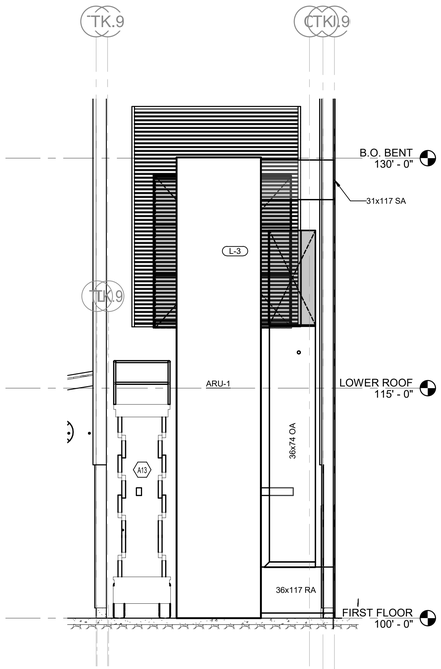

2 AIR HANDLER 114 SECTION
SCALE: 1/4" = 1'-0"

0 1' 2' 4' 8' 12' 16'

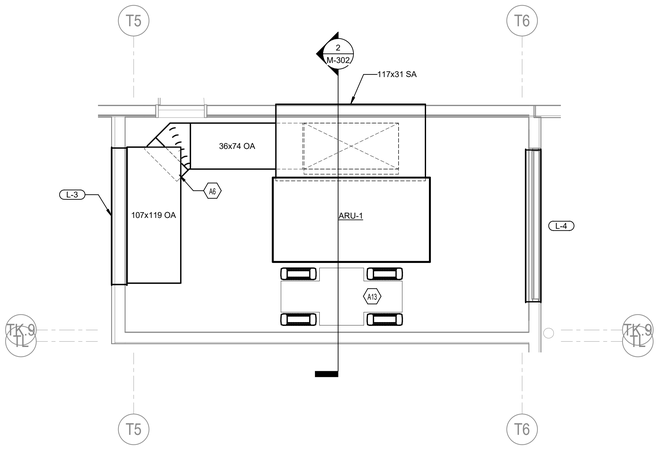

1 ENLARGED AIR HANDLER 114 PLAN
SCALE: 1/4" = 1'-0"

0 1' 2' 4' 8' 12' 16'

TAGGED NOTES

Key Value	Keynote Text
A6	CONTRACTOR TO FABRICATE CUSTOM FITTING TO CONNECT OUTSIDE AIR DUCTWORK PLENUM TO VERTICAL DUCTWORK.
A13	SCISSOR LIFT SHOWN FOR MAINTAINABILITY.

JRA architects
3225 Summit Square Place, Suite 200
Lexington, Kentucky 40509
859.252.6781

NOT FOR CONSTRUCTION

RESERVED FOR AHJ STAMP

CMTA

RFP 2 DRAWINGS

UK INDOOR TRACK FACILITY

UNIVERSITY OF KENTUCKY
LEXINGTON, KENTUCKY

MECHANICAL

PROJECT	202258
DATE	8.31.22

REVISIONS

No.	Description	Date

JRA ARCHITECTS HAS RETAINED AN ELECTRONIC VERSION OF THESE DRAWINGS. THE CLIENT AGREES NOT TO REUSE THESE DRAWINGS - IN ELECTRONIC OR ANY OTHER FORMAT - IN WHOLE, OR IN PART, FOR ANY PURPOSE OTHER THAN FOR THIS PROJECT. THE CLIENT AGREES NOT TO TRANSFER THESE ELECTRONIC FILES TO OTHERS WITHOUT THE PRIOR WRITTEN CONSENT OF THE ARCHITECT. THE CLIENT FURTHER AGREES TO WAIVE ALL CLAIMS AGAINST THE ARCHITECT RESULTING IN ANY WAY FROM ANY UNAUTHORIZED CHANGES TO OR REUSE OF THE ELECTRONIC FILES FOR ANY OTHER PROJECT BY ANYONE OTHER THAN THE ARCHITECT.

ENLARGED MECHANICAL ROOMS

M-302

COPYRIGHT 2022 - JRA, INC.

8/31/2022 4:36:03 PM

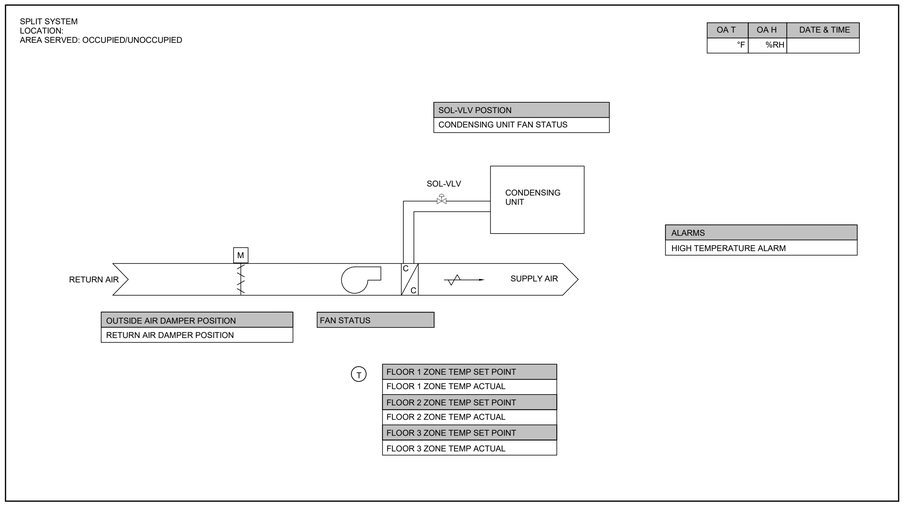

1. SPLIT SYSTEM SS-1 and SS-2

1.1. These units shall be provided with factory controls. The DDC system shall monitor space temperature and provide a high temperature alarm. Provide all necessary wiring conduit, etc. as required to interlock the DDC thermostat with unit and condensing unit. Al (3) rooms shall have space temperature and the split system shall control to maintain all spaces a minimum of 72°F (adj.).

1.3. The DDC system shall have the ability to start and stop the split system. These shall be provided with a BACnet over MSTP communication and all points shall be available to the DDC system.

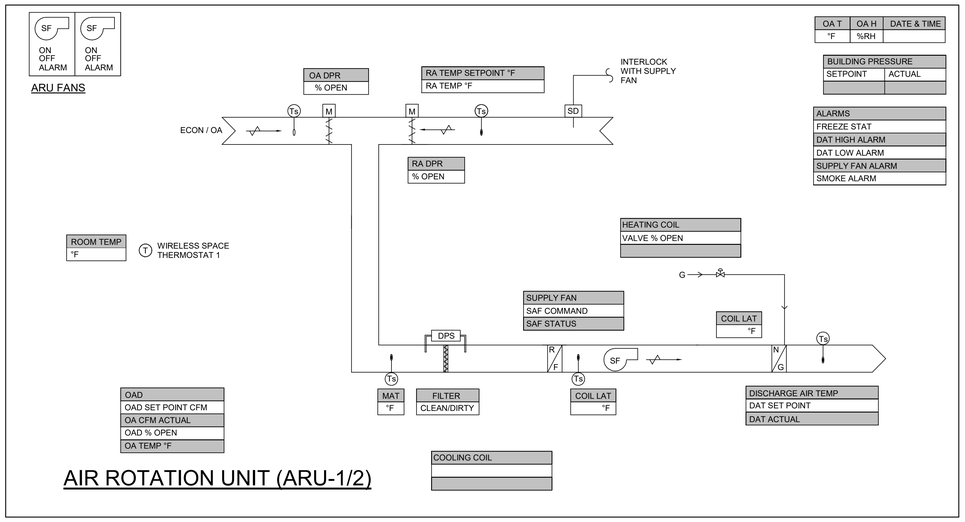

AIR ROTATION UNIT (ARU-1/2):

1. SUPPLY FAN CONTROL
   a. THE SUPPLY FAN SHALL BE STARTED AND STOPPED ACCORDING TO AN ADJUSTABLE TIME OF DAY SCHEDULE. THE INITIAL SETUP SHALL HAVE THE FAN RUNNING ALL OF THE TIME.
2. MINIMUM OUTSIDE AIR DAMPER CONTROL
   a. THE OUTSIDE AIR DAMPER SHALL BE CONTROLLED TO MAINTAIN THE RETURN AIR CO2 LEVELS AT A MAXIMUM OF 1000 PPM, CONTROLLING TO A MAX OA CFM OF 10,000. (ADJUSTABLE)
3. ECONOMIZER CONTROL
   a. WHEN THE OUTSIDE AIR TEMPERATURE IS BELOW THE SPACE TEMPERATURE SETPOINT, THE OUTSIDE AND RETURN AIR DAMPERS SHALL BE MODULATED TO MAINTAIN THE SPACE TEMPERATURE AT SETPOINT. CHILLED WATER COOLING SHALL NOT BE ENABLED UNTIL THE OUTSIDE AIR DAMPER IS FULLY OPEN. HOT WATER HEATING SHALL NOT BE ENABLED UNTIL THE OUTSIDE AIR DAMPER IS AT MINIMUM POSITION.
   b. WHEN THE OUTSIDE AIR TEMPERATURE IS ABOVE THE SPACE TEMPERATURE SETPOINT, THE OUTSIDE AIR DAMPER SHALL BE OPEN ACCORDING TO THE MINIMUM OUTSIDE AIR DAMPER CONTROL.
4. COOLING CONTROL
   a. THERE WILL BE NO COOLING IN THE BASE BID. THERE SHALL BE A SECTION IN THE UNIT FOR A FUTURE ADDITION OF A COOLING COIL.
5. HEATING CONTROL
   a. NATURAL GAS HEATING SHALL BE MODULATED TO MAINTAIN THE SPACE TEMPERATURE AT SETPOINT. THE SPACE HEATING TEMPERATURE SETPOINT SHALL BE 60F (ADJUSTABLE).
   b. THE GAS HEATING MODULATION SHALL BE LIMITED BY THE SUPPLY AIR TEMPERATURE WHICH SHALL NOT BE PERMITTED TO RISE ABOVE 91F (ADJUSTABLE).
6. NIGHT SETBACK
   a. PROVIDE NIGHT SETBACK CAPABILITIES BASED UPON A TIME OF DAY SCHEDULE.
   b. WHEN ANY OF THE REMOTE, WIRELESS TEMPERATURE SENSORS AND/OR THE RETURN AIR TEMPERATURE SENSOR INDICATES THE TEMPERATURE IS MORE THAN THE NIGHT SETBACK COOLING TEMPERATURE SETPOINT (85F, ADJUSTABLE) OR IS BELOW THE NIGHT SETBACK HEATING TEMPERATURE SETPOINT (55F, ADJUSTABLE), TURN ON THE SUPPLY FAN AND MODULATE THE ECONOMIZER, COOLING VALVE, HOT WATER HEAT TO MAINTAIN THE TEMPERATURE AT SETPOINT.
7. SAFETIES
   a. TURN OFF THE SUPPLY FAN IF THE RETURN AIR SMOKE DETECTOR INDICATES THAT SMOKE IS PRESENT.
   b. PROVIDE A FREEZESTAT AND TURN OFF SUPPLY FANS IF LOW LIMIT IS REACHED.
8. ALARMS AND MONITORS
   a. PROVIDE INIDIVIDUAL ALARMS FOR SMOKE.
   b. MONITOR THE DIFFERENTIAL PRESSURE ACROSS THE FILTERS AND PROVIDE A NOTIFICATION WHEN THE FILTERS NEED TO BE REPLACED.
   c. MONITOR THE STATUS OF EACH SUPPLY FAN WITH A CURRENT SWITCH. PROVIDE AN ALARM WHEN THE FANS ARE COMMANDED ON BUT A FAN IS NOT RUNNING.
   d. MONITOR REMOTE, WIRELESS SPACE TEMPERATURE SENSORS. PROVIDE AN ALARM WHEN A REMOTE SENSOR IS MORE THAN 5F ABOVE OR BELOW (ADJUSTABLE) THE RETURN AIR TEMPERATURE SENSOR WHEN THE SYSTEM IS IN OPERATION.

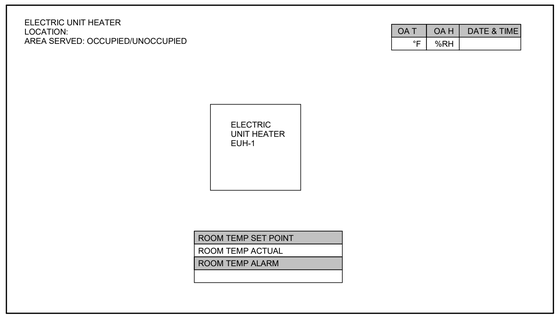

1. ELECTRIC UNIT HEATER

1.1. All electric unit heaters shall be set to 60 degrees F (adjustable).

1.2 All electric unit heaters shall be capable of being scheduled on/off. They shall be in occupied mode 24/7 unless otherwise noted.

1.3 Controls Contractor and Mechanical Contractor shall coordinate thermostat provided for heater such that electric unit heater can be tied into BMS system and be controlled in accordance with this schematic and these sequences.

1.4 Thermostat shall send an alarm if actual space temperature is below 50 degrees F (adjustable).

MECHANICAL CONTROL LEGEND

AFF	ABOVE FINISHED FLOOR	Ts	AVERAGING TEMPERATURE SENSOR
AI	ANALOG INPUT	Ts	INSERTION TEMPERATURE SENSOR
AO	ANALOG OUTPUT	H	HUMIDITY SENSOR
BAS	BUILDING AUTOMATION SYSTEM	LL	LOW LIMIT TEMPERATURE SENSOR
BP	BOOSTER PUMP	P	PRESSURE SENSOR
CCF	100 CUBIC FEET NATURAL GAS	DP	DUCT STATIC PRESSURE SENSOR
CMD	COMMAND	DPSW	DIFFERENTIAL PRESSURE SWITCH
CO2	CARBON DIOXIDE	ES	DAMPER END SWITCH
CR	CONDENSER RETURN	DP	DIFFERENTIAL PRESSURE SENSOR
CS	CONDENSER SUPPLY	C	START/STOP COMMAND
CSR	CURRENT SENSOR RELAY	M	MOTORIZED DAMPER
CWR	CHILLED WATER RETURN	F	FLOW METER
CWS	CHILLED WATER SUPPLY	CS	CURRENT SENSOR
DAT	DISCHARGE AIR TEMPERATURE	SD	DUCT MOUNTED SMOKE DETECTOR
DI	DIGITAL INPUT	COS	CONDENSATE OVERFLOW SWITCH
DO	DIGITAL OUTPUT	DSP-HL	DUCT STATIC PRESSURE HIGH LIMIT
DP	DEWPOINT	DSP-LL	DUCT STATIC PRESSURE LOW LIMIT
DPR	DAMPER	ZN-DP	ZONE DEW POINT
EA	EXHAUST AIR PATH	ZN-OCC	ZONE OCCUPANCY SENSOR
FBD	FACE AND BYPASS DAMPER	ZN-T	ZONE TEMPERATURE - 48" AFF
HL	HIGH LIMIT	H/W	HEATING COIL
HP	HEAT PUMP	Co2	CARBON DIOXIDE SENSOR
HR	HEAT PUMP RETURN	C/W	CHILLED WATER COIL
HS	HEAT PUMP SUPPLY	E/R	ENERGY RECOVERY COIL
HWR	HOT WATER RETURN	HUMID	HUMIDIFIER
HWS	HOT WATER SUPPLY	DAT	DISCHARGE AIR SENSOR
LL	LOW LIMIT	VFD	VARIABLE FREQUENCY DRIVE
LPC	LOW PRESSURE CONDENSATE	AFM	AIR FLOW MONITORING STATION
LPS	LOW PRESSURE STEAM		
MAT	MIXED AIR TEMPERATURE		
MAU	MAKE-UP AIR UNIT		
MIN	MINIMUM		
NSW	NON-SOFTENED WATER		
NC	NORMALLY CLOSED		
O/C	OCCUPIED COOLING SETPOINT		
O/H	OCCUPIED HEATING SETPOINT		
OA	OUTSIDE AIR PATH		
OAD	OUTSIDE AIR DAMPER		
OAH	OUTSIDE AIR HUMIDITY		
OAT	OUTSIDE AIR TEMPERATURE		
OCC	OCCUPANCY		
PRESS	PRESSURE		
RA	RETURN AIR PATH		
RF	RETURN FAN		
RH	RELATIVE HUMIDITY		
SA	SUPPLY AIR PATH		
SETPT	SETPOINT		
SF	SUPPLY FAN		
SFA	SUPPLY FAN ARRAY		
STS	STATUS		
SW	SOFT WATER		
TCC	TEMPERATURE CONTROL CONTRACTOR		
TEMP	TEMPERATURE		
U/C	UNOCCUPIED COOLING SETPOINT		
U/H	UNOCCUPIED HEATING SETPOINT		
VFD	VARIABLE FREQUENCY DRIVE		

JRA architects
3225 Summit Square Place, Suite 200
Lexington, Kentucky 40509
859.252.6781

NOT FOR CONSTRUCTION

RESERVED FOR AHJ STAMP

CMTA

RFP 2 DRAWINGS

UK INDOOR TRACK FACILITY

UNIVERSITY OF KENTUCKY
LEXINGTON, KENTUCKY

MECHANICAL

PROJECT	202258
DATE	8.31.22

REVISIONS

No.	Description	Date

JRA ARCHITECTS HAS RETAINED AN ELECTRONIC VERSION OF THESE DRAWINGS. THE CLIENT AGREES NOT TO REUSE THESE DRAWINGS - IN ELECTRONIC OR ANY OTHER FORMAT - IN WHOLE, OR IN PART, FOR ANY PURPOSE OTHER THAN FOR THE PROJECT. THE CLIENT AGREES NOT TO TRANSFER THESE ELECTRONIC FILES TO OTHERS WITHOUT THE PRIOR WRITTEN CONSENT OF THE ARCHITECT. THE CLIENT FURTHER AGREES TO WAIVE ALL CLAIMS AGAINST THE ARCHITECT RESULTING IN ANY WAY FROM ANY UNAUTHORIZED CHANGES TO OR REUSE OF THE ELECTRONIC FILES FOR ANY OTHER PROJECT BY ANYONE OTHER THAN THE ARCHITECT.

MECHANICAL CONTROLS

M-401

COPYRIGHT 2022 - JRA, INC.

C:\Users\samos\Documents\XKTF22 Central File_nolanjamos.rvt
8/31/2022 4:36:05 PM

C:\Users\namos\Documents\XKTF22 Central File_nolanjamos.rvt

OUTSIDE AIR UNIT SCHEDULE

MARK	MANUFACTURER	MODEL #	UNIT CONFIGURATION	PHYSICAL DATA				FAN											CD PIPE RUNOUT SIZE	REMARKS
				WIDTH (IN.)	LENGTH (IN.)	HEIGHT (IN.)	WEIGHT (LBS)	SA/OA CFM	RA/EA CFM	FAN MOTOR TYPE	# OF FANS	E.S.P. (" WC)	RATED H.P. (PER FAN)	VOLT.	PH.	MCA	MOCP	OP. FREQ.		
OA-1	ALPHA AIR	AAV100G5ASTA	VERTICAL	28	34	80	600	500	500	ECM	2	1.00	0.54	208 V	1	10 A	15	60	3/4"	ALL

AIR ROTATION UNIT

MARK	MFR	SERVICE	LOCATION	DIMENSIONS			SUPPLY FAN					ELECTRICAL					GAS HEAT			
				LENGTH (IN)	WIDTH (IN)	HEIGHT (IN)	AIRFLOW (CFM)	FAN TYPE	ESP (IN. W.G.)	TSP (IN. W.G.)	FAN MOTOR HP	VOLTAGE	FREQUENCY	PHASE	MCA	MOCP	INPUT HEATING CAPACITY (MBH)	OUTPUT HEATING CAPACITY (MBH)	MAX PRESURE (PSI)	MIN PRESSURE (PSI)
ARU-1	JOHNSON AIR ROTATION	TRACK	MECHANICAL 114	123	66	360	25000	BELT	0.50	1.50	5	208 V	60 Hz	3	44 A	50	938.0	750	5.00	2.00
ARU-2	JOHNSON AIR ROTATION	TRACK	MECHANICAL 115	123	66	360	25000	BELT	0.50	1.50	5	208 V	60 Hz	3	44 A	50	938.0	750	5.00	2.00

REMARKS:
1. UNIT HAS (2) 5HP SUPPLY FAN MOTORS. THERE IS ONE ELECTRICAL CONNECTION FOR THE UNIT.

REGISTERS, GRILLES, AND DIFFUSERS

MARK	MANUFACTURER	MODEL #	TYPE	GRILLE SIZE	PANEL SIZE	DUCT INLET SIZE	DUCT BRANCH SIZE	MAX CFM	P.D.	NOISE CRITERIA	THROW PATTERN	REMARKS
E-01	TITUS	50F	ALUMINUM EGGCRATE 1/2" GRID	22"X22"	24"X24"	10"X10"	10"Ø	400	0.07	20	-	
E-10	TITUS	350FL	ALUMINUM LOUVERED FILTER GRILLE	8"X8"	10"X10"	8"X8"	8"X8"	200	0.06	24	-	
R-02	TITUS	50F	ALUMINUM EGGCRATE 1/2" GRID	22"X22"	24"X24"	8"X8"	8"X8"	225	0.06	15	-	
R-05	TITUS	50F	ALUMINUM EGGCRATE 1/2" GRID	22"X22"	24"X24"	12"x12"	12"x12	625	0.08	23	-	
R-10	TITUS	350FL	ALUMINUM LOUVERED FILTER GRILLE	30"X24"	32"X26"	30"X24"	30"X24"	1600	0.02	30		
S-01	TITUS	TMS-AA	ALUMINUM HIGH PERFORMANCE 3 CONE DIFFUSER	24"X24"	24"X24"	6"Ø	6"Ø	100	0.01	25	4-WAY	
S-02	TITUS	TMS-AA	ALUMINUM HIGH PERFORMANCE 3 CONE DIFFUSER	24"X24"	24"X24"	8"Ø	8"Ø	225	0.04	13	4-WAY	
S-03	TITUS	TMS-AA	ALUMINUM HIGH PERFORMANCE 3 CONE DIFFUSER	24"X24"	24"X24"	10"Ø	10"Ø	300	0.07	22	4-WAY	
S-10	TITUS	300FL	ALUMINUM DOUBLE DEFLECTION 3/4" BLADE SPACING, 22 DEG DEFLECTION	10"X10"	12"X12"	10"X10"	10"X10"	125	0.01	14	22-DEG DEFL.	
S-11	TITUS	S301FS	ALUMINUM DIRECT SPIRAL DUCT MOUNTED, 3/4" SPACING, SINGLE DEFLECTION	18"X6"	20"X8"	SEE PLANS	SEE PLANS	400	0.04	25	SINGLE DEFL.	

SPLIT SYSTEM INDOOR UNIT SCHEDULE

MARK	MODEL #	MANUF.	DIMENSIONS (IN.)			WEIGHT (LBS)	AIRFLOW (CFM)	ELECTRICAL		MCA	MOCP
			LENGTH	WIDTH	HEIGHT			VOLTAGE	PHASE		
SS-1	FTQ48TAVJUD	DAIKIN	21	21	53	150	1600	208 V	1	7 A	15
SS-2	FTQ48TAVJUD	DAIKIN	21	21	53	150	1600	208 V	1	7 A	15
SS-3	FAQ18TAVJU	DAIKIN	42	10	12	31	500	208 V	1	1 A	15

SPLIT SYSTEM OUTDOOR UNIT SCHEDULE

MARK	MANUF.	MODEL #	DIMENSIONS (IN.)			WEIGHT (LBS)	TOTAL COOLING (MBH)	SENSIBLE COOLING (MBH)	HEATING CAPACITY (MBH)	MINIMUM SEER	ELECTRICAL				REMARKS
			LENGTH	WIDTH	HEIGHT						MCA	MOCP	VOLTAGE	PHASE	
HP-1	DAIKIN	RZQ48TAVJUA	36	14	53	225	48.0	32.7	54.0	14.8	29 A	35	208 V	1	
HP-2	DAIKIN	RZQ48TAVJUA	36	14	53	225	48.0	32.7	54.0	14.8	29 A	35	208 V	1	
HP-3	DAIKIN	RZQ18TAVJUA	37	14	39	172	18.0	13.7	20.0	17	17 A	20	208 V	1	

VENTILATION FAN SCHEDULE

MARK	MANUFACTURER	MODEL #	SERVICE	TYPE	CFM	E.S.P. ("WG)	RPM	HP	VOLTAGE	PHASE	DRIVE	STARTER	DISCONNECT	MAX SONES	MAX DBA	WEIGHT	REMARKS
F-1	TCF	WPD	TRACK	PROPELLER WALL FAN	5000	0.38	1200	1	480 V	3	DIRECT	Yes	Yes	25	73	173	ALL

LOUVER SCHEDULE

MARK	MANUFACTURER	MODEL #	SERVICE	DEPTH (IN)	CONSTRUCTION	CFM	WIDTH (IN)	HEIGHT (IN)	FREE AREA	VELOCITY (FPM)	APD (IN. WG.)	BIRD SCREEN	DRAINABLE BLADE	REMARKS
L-1	RUSKIN	ELF375DX	OA-1 OA	4	ALUMINUM	500	24	24	54	500	0.05	Yes	Yes	ALL
L-2	RUSKIN	ELF375DX	OA-1 EA	4	ALUMINUM	500	24	24	54	500	0.05	Yes	Yes	ALL
L-3	RUSKIN	ELF375DX	ARU OA	4	ALUMINUM	25000	108	120	54	500	0.05	Yes	Yes	ALL
L-4	RUSKIN	ELF375DX	ARU RA	4	ALUMINUM	25000	120	150	54	400	0.10	Yes	Yes	ALL
L-5	RUSKIN	ELF375DX	VENTILATION	4	ALUMINUM	2500	78	42	54	225	0.02	Yes	Yes	ALL

ELECTRIC HEATER SCHEDULE

MARK	MANUFACTURER	MODEL #	TYPE	DIMENSIONS (IN)			KW	ELECTRICAL				REMARKS
				LENGTH	WIDTH	HEIGHT		VOLTAGE	PHASE	MCA	MOCP	
EUH 1	MARKEL	H3H5605T	HORIZONTAL FAN FORCED UNIT HEATER	14	13	16	4 W	208 V	3	10 A	15	
EUH 2	MARKEL	H3H5605T	HORIZONTAL FAN FORCED UNIT HEATER	14	13	16	4 W	208 V	3	10 A	15	
EWH-1	MARKEL	F3316T2SRPW	FAN FORCED WALL HEATER WITH SUMMER SWITCH	16	4	21	4 W	208 V	3	17 A	20	

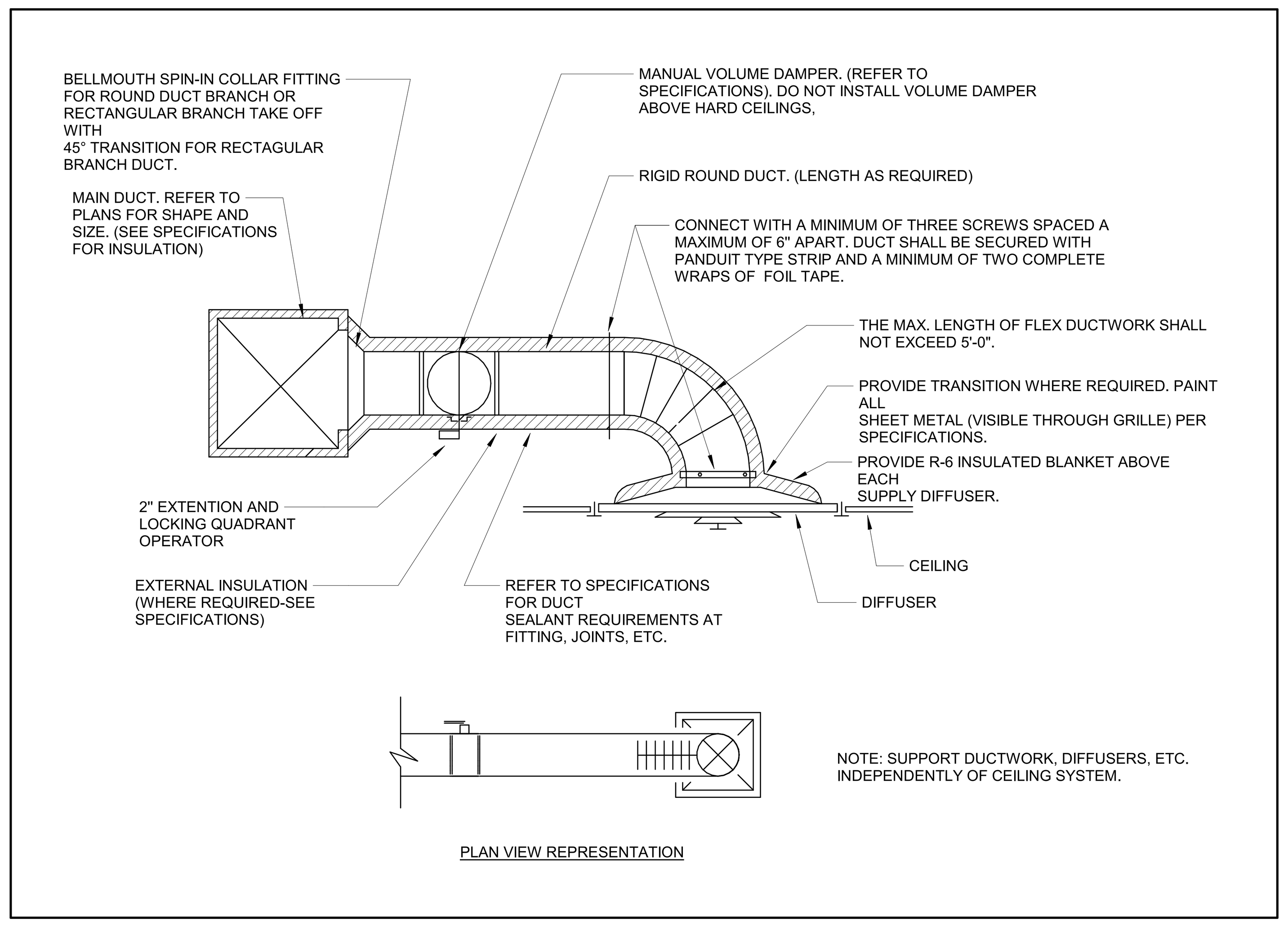

1 TYPICAL BRANCH DUCT DETAIL(SUPPLY, RETURN, AND EXHAUST)
NOT TO SCALE

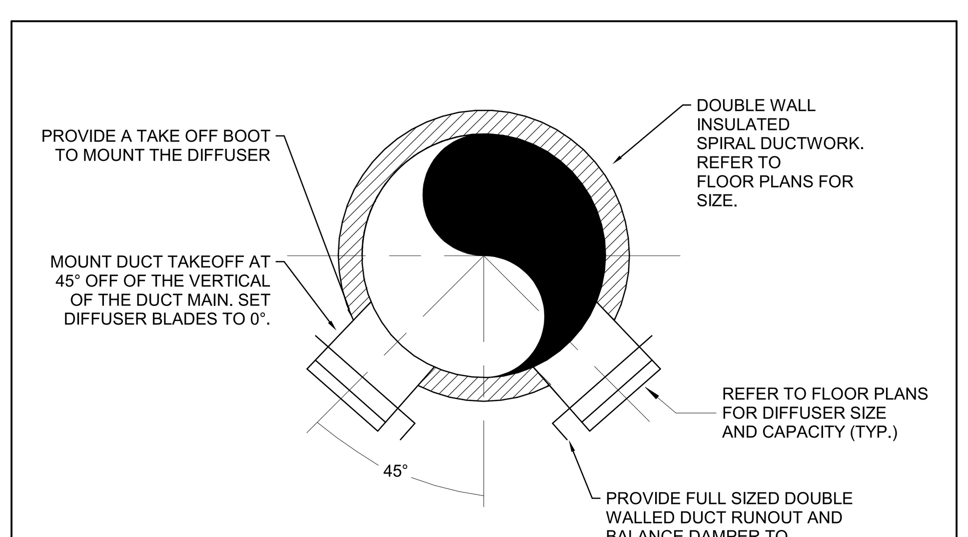

2 SIDE WALL DUCT TAKEOFF DETAIL
12" = 1'-0"

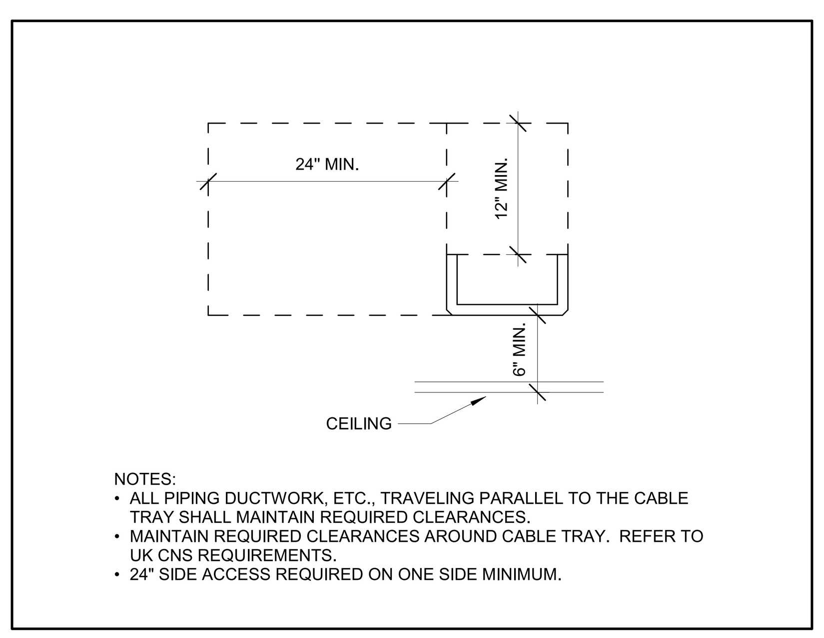

3 CABLE TRAY COORDINATION CLEARANCE DETAIL
NOT TO SCALE

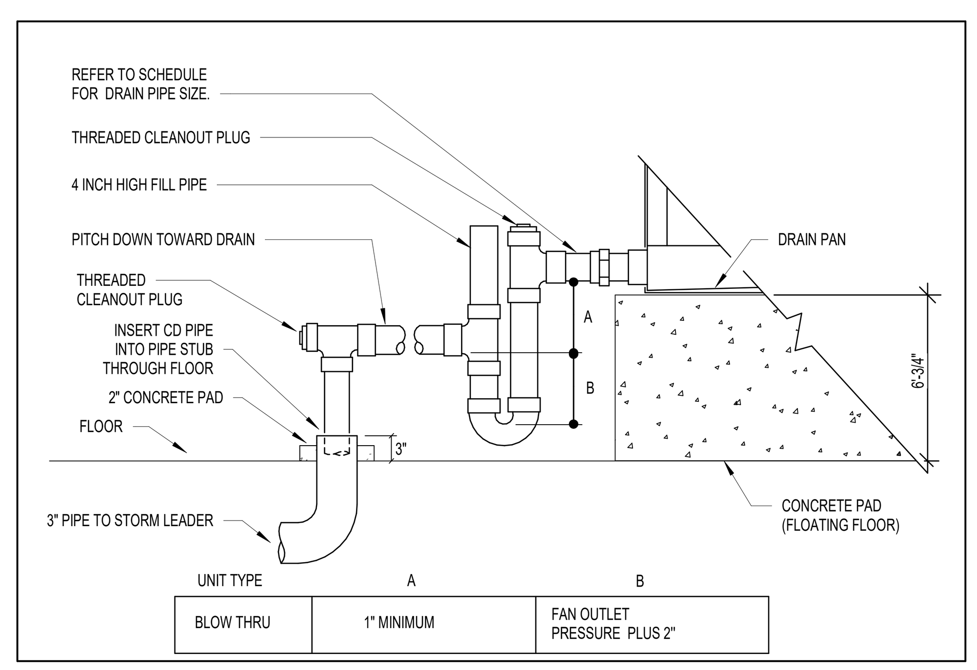

4 AIR ROTATION UNIT DRAIN TRAP DETAIL
1/8" = 1'-0"

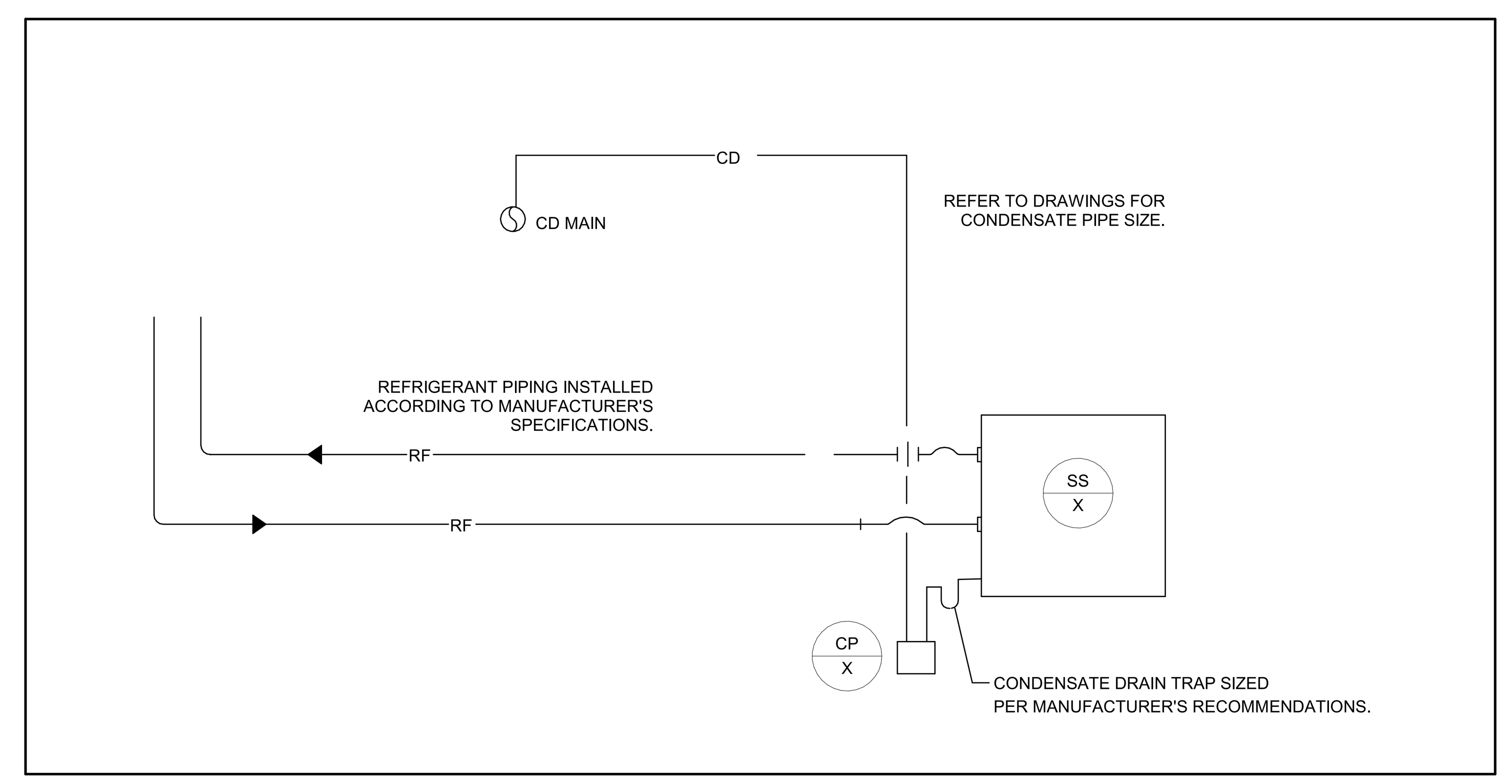

5 HORIZONTAL AND VERTICAL HEAT PUMP PIPING SCHEMATIC
NOT TO SCALE

8/31/2022 4:36:10 PM

JRA architects
3225 Summit Square Place, Suite 200
Lexington, Kentucky 40509
859.252.6781

NOT FOR CONSTRUCTION

RESERVED FOR AHJ STAMP

CMTA

RFP 2 DRAWINGS

UK INDOOR TRACK FACILITY
UNIVERSITY OF KENTUCKY
LEXINGTON, KENTUCKY

MECHANICAL

PROJECT	202258
DATE	8.31.22

REVISIONS

No.	Description	Date

JRA ARCHITECTS HAS RETAINED AN ELECTRONIC VERSION OF THESE DRAWINGS. THE CLIENT AGREES NOT TO REUSE THESE DRAWINGS - IN ELECTRONIC OR ANY OTHER FORMAT - IN WHOLE, OR IN PART, FOR ANY PURPOSE OTHER THAN FOR THE PROJECT. THE CLIENT AGREES NOT TO TRANSFER THESE ELECTRONIC FILES TO OTHERS WITHOUT THE PRIOR WRITTEN CONSENT OF THE ARCHITECT. THE CLIENT FURTHER AGREES TO WAIVE ALL CLAIMS AGAINST THE ARCHITECT RESULTING IN ANY WAY FROM ANY UNAUTHORIZED CHANGES TO OR REUSE OF THE ELECTRONIC FILES FOR ANY OTHER PROJECT BY ANYONE OTHER THAN THE ARCHITECT.

MECHANICAL SCHEDULES AND DETAILS

M-501

COPYRIGHT 2022 - JRA, INC.

C:\Users\namos\Documents\XKTF22 Central File_nolanjamos.rvt

DESCRIPTION	MOUNTING HEIGHT	SYMBOL
LIGHTING CONTROLS		
LIGHT SWITCH: LOW VOLTAGE (WHEN PRESENT, # INDICATES QUANTITY OF CHANNELS)	46"	$ #
EXAM LIGHT SWITCH	46"	$ X
NIGHT LIGHT SWITCH WITH CONSTANTLY ILLUMINATED HANDLE	46"	$ N
SURGICAL LIGHT INTENSITY CONTROL	46"	$ SL
LOW VOLTAGE DIMMER SWITCH (WHEN PRESENT, # INDICATES QUANTITY OF CHANNELS)	46"	$ D#
GRAPHIC TOUCHSCREEN CONTROL STATION	46"	$ G
LINE VOLTAGE SWITCH	46"	$ LV
LINE VOLTAGE THREE-WAY, FOUR-WAY SWITCH	46"	$ LV3 $ LV4
LINE VOLTAGE THREE-WAY, FOUR-WAY DIMMER SWITCH	46"	$ LV3D $ LV4D
KEYED SWITCH	46"	$ K
OCCUPANCY OR VACANCY SENSOR SWITCH	46"	$ OS $ VS
OCCUPANCY OR VACANCY SENSOR SWITCH WITH DIMMING	46"	$ DOS
LIGHT SWITCH FOR UNDER-CABINET LIGHTS	46"	$ U
ILLUMINATED HANDLE LIGHT SWITCH (ILLUMINATED WHEN LOAD IS OFF)	46"	$ IL
PILOT LIGHT SWITCH (ILLUMINATED WHEN LOAD IS ON)	46"	$ PL
TIMER SWITCH	46"	$ T
OCCUPANCY OR VACANCY SENSOR, CEILING MOUNT	CLG	OS VS
OCCUPANCY SENSOR, CORNER MOUNT	CLG	OS
DAYLIGHT SENSOR	AS NOTED	DS
PHOTOCELL	AS NOTED	PC
LIGHTING RELAY	AS NOTED	LR
EMERGENCY AUTOMATIC TRANSFER SWITCH FOR LIGHTING CONTROLS (REFER TO DETAIL)	CLG	ER
POWER OUTLETS		
SIMPLEX RECEPTACLE (TEXT INDICATES NEMA TYPE)	1'-6"	X
DUPLEX RECEPTACLE	1'-6"	
SLASH THROUGH ANY DEVICE INDICATES MOUNTING ABOVE COUNTERTOP 4" ABOVE BACKSPLASH		
'G' INDICATES INTEGRAL GROUND FAULT PROTECTION (GFCI)	1'-6"	G
DEAD FRONT GFCI DEVICE, LABEL AND INSTALL IN READILY ACCESSIBLE LOCATION		G
DUPLEX RECEPTACLE WITH TWO INTEGRAL USB CHARGING PORTS	1'-6"	U
USB CHARGING OUTLET WITH FOUR INTEGRAL USB PORTS	1'-6"	U
GANG RECEPTACLE IN COMBINATION WITH SWITCH (PROVIDE DIVIDER IF LIGHTING CIRCUIT IS 277V)	46"	C/S
DUPLEX RECEPTACLE, CEILING MOUNTED	CLG	
QUADRUPLEX RECEPTACLE	1'-6"	
JUNCTION BOX, CEILING OR WALL		J J
VOLTAGE/2 POLE RECEPTACLE, TEXT INDICATES NEMA TYPE	1'-6"	X
VOLTAGE/3 POLE RECEPTACLE, TEXT INDICATES NEMA TYPE	1'-6"	X
'T' INDICATES SAFETY TYPE, TAMPER RESISTANT OUTLET(S)		T
SS INDICATES SURGE SUPPRESION TYPE OUTLET(S)		SS
GROUND FAULT PROTECTED DUPLEX WITH WEATHER-PROOF "WHILE IN USE" TYPE DIE-CAST METAL COVERPLATE WITH LOCKABLE ENCLOSURE AT OUTLET - SEE SPECIFICATIONS	2'-2"	G WP
DUPLEX FOR ELECTRIC WATER COOLER: COORDINATE EXACT LOCATION WITH PLUMBING CONTRACTOR TO CONCEAL OUTLET BEHIND COOLER, PROVIDE READILY ACCESSIBLE GFI DEVICE AT 18" ADJACENT TO WATER COOLER		G EWC
BOX ON ANY DEVICE INDICATES SURFACE MOUNTED BACKBOX/WIREMOLD		
CIRCLE ON ANY DEVICE INDICATES DEVICE FED FROM STUB UP CONDUIT		
FIRE ALARM		
MAIN CONTROL PANEL CENTRAL PROCESSING UNIT (CPU)	6'-6" TO TOP	FACP
REMOTE L.C.D. FIRE ALARM ANNUNCIATOR	54"	FAA
REMOTE FIRE ALARM ANNUNCIATOR W/ MICROPHONE	54"	FAAM
LOCAL OPERATOR CONSOLE	54"	LOC
SMOKE EVACUATION CONTROL PANEL	54"	SECP
POWER SUPPLY/CONTROL FOR AUDIO/VISUAL DEVICES	46"	NAC
TRANSPONDER CABINET	46"	TRAN
GRAPHICS DISPLAY TERMINAL		GDT
FIRE ALARM CONTROL EXTENDER		EXT
POST INDICATOR VALVE		PIV
PULL STATION : DOUBLE ACTION	46" TO LEVER	F
KEYED, LOCKED PULL STATION : DOUBLE ACTION. STATION SHALL ONLY BE OPERABLE VIA KEY IN POSSESSION OF STAFF.	46" TO LEVER	F K
AUDIO/VISUAL NOTIFICATION APPLIANCE	WALL, CLG	F F
AUDIO-ONLY NOTIFICATION APPLIANCE	WALL, CLG	A A
VISUAL-ONLY NOTIFICATION APPLIANCE	WALL, CLG	V V
BELL / LIGHT	80"	BL
BELL ONLY	80"	B
PHOTO-ELECTRIC SMOKE DETECTOR	CLG	SD
PHOTO-ELECTRIC SMOKE DETECTOR FOR PATIENT ROOM MONITORING (SEE RISER)	CLG	SD P
PROJECTED BEAM SMOKE DETECTOR; EMITTER (BE) AND RECEIVER (BR)		BE BR
HEAT DETECTOR	CLG	HD
CARBON MONOXIDE DUCT DETECTOR	ABOVE CEILING	CD
CARBON MONOXIDE ALARM: SINGLE STATION W/SOUNDER BASE	CLG	CM
CARBON MONOXIDE AUDIO/VISUAL NOTIFICATION APPLIANCE	WALL	F CM
DOOR HOLDER : WALL TYPE	WALL	DH
DOOR HOLDER : CLOSURE TYPE	ABV DOOR	DH C
DUCT SMOKE DETECTOR	ABV CLG	DD
CONNECTION TO SPRINKLER FLOW SWITCH WITH ADDRESSABLE MODULE		FS
CONNECTION TO SPRINKLER TAMPER SWITCH WITH ADDRESSABLE MODULE		TS
PRESSURE SWITCH		PS
ISOLATION MODULE	WALL	I
ZONE ADDRESSABLE MODULE		Z
H.V.A.C. SMOKE DAMPER CONNECTION		SM
FLUSH MOUNTED REMOTE ALARM INDICATING STATION/TEST SWITCH	7'-6"	RI
FIREMAN'S PHONE JACK	4'-6"	FP
FIREMAN'S KNOX BOX CONNECTION		KB
ADDRESSABLE RELAY MODULE		R
INDICATES VANDAL-PROOF POLYCARBONATE COVER, VANDAL PROOF COVERS SHALL BE UL LISTED FOR USE WITH THE SPECIFIC DEVICE THEY ARE PROTECTING		VR
INDICATES CHIME AUDIBLE NOTIFICATION		CH
DEVICE USED FOR ELEVATOR CONTROL		EL

DESCRIPTION	MOUNTING HEIGHT	SYMBOL
LIGHTING FIXTURES AND EQUIPMENT		
REFER TO LUMINAIRE SCHEDULE FOR EXACT FIXTURE SPECIFICATIONS, MOUNTING HEIGHTS, ETC.		
SURFACE OR SUSPENDED CEILING FIXTURE		
RECESSED CEILING FIXTURE		
POLE MOUNTED AREA LIGHT WITH CONCRETE BASE		
LIGHTED BOLLARD WITH CONCRETE BASE		
EMERGENCY BATTERY WALL-PACK		
WALL MOUNT FIXTURE		
TRACK COMPLETE WITH POWER SUPPLIES AND FIXTURE HEADS		
FLOODLIGHT		
EXIT LIGHT (CEILING, END, WALL MOUNT) WITH OR WITHOUT DIRECTIONAL ARROWS, WITH OR WITHOUT EGRESS HEADS		
STRIP FIXTURE		
CROSS-HATCHING INDICATES LIGHT IS POWERED FROM THE EMERGENCY-CRITICAL BRANCH		
PARALLEL-HATCHING INDICATES LIGHT IS POWERED FROM THE EMERGENCY-LIFE SAFETY BRANCH		
REMOTE LIGHT FIXTURE DRIVER	AS NOTED	RD
REMOTE BATTERY BACKUP	AS NOTED	RB
CENTRAL BATTERY INVERTER	AS NOTED	INV
MISCELLANEOUS		
CONDUIT CONCEALED IN WALLS OR IN CEILING SPACE: ARROW(S) INDICATE(S) HOME RUN & # OF CIRCUITS: HASHMARKS INDICATE # OF CONDUCTORS.		PHASE NEUTRAL GROUND
NON-REVERSING MOTOR STARTER SNAP SWITCH	AS NOTED	$ M
MOMENTARY CONTACT SWITCH	46"	$ MC
HAND-OFF-AUTO 3-POSTION SWITCH	46"	$ HOA
DISCONNECT SWITCH	5'-0"	
MAGNETIC STARTER	5'-0"	
MAGNETIC COMBINATION STARTER	5'-0"	
VARIABLE FREQUENCY DRIVE	5'-0"	
ENCLOSED FLUSH MTD. CIRCUIT BREAKER	5'-0"	
MUSHROOM SWITCH	46"	
PUSHBUTTON STATION WITH 1, 2, OR 3 BUTTONS.	46"	
PANELBOARD, SURFACE OR FLUSH MOUNTED, HATCHING INDICATES EMERGENCY	6'-6" TO TOP	
TRANSFORMER	AS NOTED	
EQUIPMENT HARDWIRE CONNECTION (SEE DETAIL)		J
KITCHEN EQUIPMENT OUTLET COUPLING CONNECTION (SEE DETAIL)		J
MOTOR CONNECTION, REFER TO EQUIPMENT CONNECTION SCHEDULE		
PLUMBING FIXTURE SOLENOID VALVE/ELECTRIC EYE SENSOR CONNECTION. COORDINATE EXACT CONNECTION REQUIREMENTS WITH MANUFACTURER.		
PLUMBING FIXTURE ELECTRIC EYE TRANSFORMER CONNECTION. TRANSFORMER SHALL BE 120V-24V. MOUNT ABOVE SUSPENDED ACCESSIBLE CEILING IN J-BOX. PROVIDE ADDITIONAL TRANSFORMERS OF SAME TYPE AS/IF NEEDED		
PROVIDE CONNECTION TO HAND DRYER (SEE ARCHITECTURAL SPECIFICATIONS)	VERIFY WITH ARCHITECT	
SURGE PROTECTION DEVICE (SURFACE OR FLUSH MOUNTED)		SPD
GENERATOR ANNUNCIATOR PANEL (SURFACE OR FLUSH MOUNTED) - SEE SPECIFICATIONS	46"	GEN-A
CONDUIT UP		
CONDUIT DOWN		
FLEXIBLE CONDUIT		
GROUND BUS BAR ON INSULATED STANDOFFS	2'-0"	
BUS DUCT, AMPERAGES AS NOTED	AS SHOWN	
WIREWAY WITH REMOVABLE COVER (SIZE AS NOTED)	AS SHOWN	
TRENCH DUCT (SIZE AS NOTED)	AS SHOWN	
WIRE BASKET CABLE TRAY, SIZE AS NOTED	AS SHOWN	
LADDER CABLE TRAY, SIZE AS NOTED	AS SHOWN	
SOLID BOTTOM CABLE TRAY, SIZE AS NOTED	AS SHOWN	
J-HOOK PATHWAY		
EQUIPMENT TAG, REFER TO EQUIPMENT SCHEDULE		EQUIP-#
MECHANICAL EQUIPMENT DESIGNATOR (SEE MECH. SCHEDULES)		EQUIP-#
TAGGED NOTE		
REVISION TAG		

LINETYPE LEGEND	
	EXISTING
	DEMOLISHED
	NEW

DESCRIPTION	MOUNTING HEIGHT	SYMBOL
ABBREVIATIONS		
UNLESS OTHERWISE NOTED		UON
OWNER FURNISHED CONTRACTOR INSTALLED		OFCI
OWNER FURNISHED OWNER INSTALLED		OFOI
CONTRACTOR FURNISHED CONTRACTOR INSTALLED		CFCI
CONTRACTOR FURNISHED OWNER INSTALLED		CFOI
INDICATES EMERGENCY POWER		EM
WIREGUARD - PROVIDE MANUFACTURER'S SPECIFIC GUARD FOR DEVICE NOTED		WG
WEATHERPROOF - NEMA-3R, WET LOCATION LISTED. PROVIDE COVERS, RATINGS, ETC, AS SUITABLE FOR OUTDOORS.		WP
EXPLOSION PROOF - PROVIDE WIRING METHODS, ENCLOSURES, RATINGS, ETC. AS SUITABLE FOR HAZARDOUS LOCATION.		XP
SPECIAL OUTLETS		
FLOORBOX, AS SCHEDULED	FLOOR	FB#
POKE-THRU, AS SCHEDULED	FLOOR	P#
WALLBOX, AS SCHEDULED	WALL	WB#
AUDIO/VISUAL SYSTEM OUTLET WITH DUPLEX RECEPTACLE, REFER TO ASSOCIATED DETAIL FOR ADDITIONAL INFORMATION	1'-6"	AV
COMBINATION POWER AND DATA OUTLET LOCATION, REFER TO ASSOCIATED DETAIL FOR ADDITIONAL INFORMATION	1'-6"	
COMBINATION POWER AND DATA OUTLET LOCATION, GFCI DUPLEX RECEPTACLE, REFER TO ASSOCIATED DETAIL FOR ADDITIONAL INFORMATION	1'-6"	
OVERHEAD PROJECTOR: PROVIDE DUPLEX RECEPTACLE, ONE DATA, HDMI, 3.5mm AUDIO, AND VGA OUTLET ON (3) PLATES	CLG	
SPECIAL VIDEO SYSTEM SIGNAL INPUT		-NA-
SURFACE PLUG-MOLD		
SURFACE WIRE-MOLD		
POWER POLE AS NOTED		PP
TELEVISION		
TELEVISION HEADEND (SPLITTERS/AMPLIFIERS/DISTRIBUTION)	46"	TV
TELEVISION SYSTEM OUTLET WITH DUPLEX RECEPTACLE, COORDINATE LOCATION WITH WALL BRACKET WHERE APPLICABLE	7'-0"	T
OVERHEAD PAGING		
PAGING SPEAKER: CEILING	CLG	S
PAGING SPEAKER W/ VOLUME CONTROL	CLG	SV
PAGING SPEAKER: WALL	8'-0"	S
RECESSED WALL MOUNTED PAGING SPEAKER DUKANE 5A606 SPEAKER. ATLAS 417-8WD	8'-0"	RS
VANDAL PROOF / WEATHERPROOF WALL MOUNTED PAGING SPEAKER. QUAM VP1	SEE FLOOR PLANS	VS V
EXTERIOR VANDAL PROOF / WEATHERPROOF WALL MOUNTED PAGING SPEAKER, SHALL BE PAINTED COLOR SELECTED BY ARCHITECT/OWNER. QUAM VP6	SEE FLOOR PLANS	S WP
WALL MOUNTED PAGING HORN	9'-0"	H
CALL INITIATION STATION	46"	C
WALL VOLUME CONTROL	46"	V
PAGING MICROPHONE	1'-6"	M
PANIC BUTTON (MOUNTING PER DRAWINGS)	46", UNDER DESK	PB PB
NOTIFICATION LIGHT (MOUNTING PER DRAWINGS)	7'-6", CLG	NL PB
LCD WALL DISPLAY		LCD
PAGING SYSTEM HEADEND	46"	PA
AV SYSTEMS		
PROJECTOR WITH MOUNT (CEILING OR WALL AS INDICATED)	REFER TO DRAWINGS	P P
LOCAL SOUND SPEAKER: CEILING	CLG	LS
WIRELESS MICROPHONE ANTENNA	CLG	MA
LOCAL SOUND SPEAKER: WALL	REFER TO SPECS.	LS
MICROPHONE INPUT: # INDICATES NUMBER OF INPUTS.	1'-6"	M
WIRELESS MICROPHONE ANTENNA, WALL MOUNT	REFER TO SPECS.	MA
AV INPUT (OR OUTPUT) WALL PLATE. REFER TO DRAWINGS AND SPECIFICATIONS FOR TYPE AND QUANTITY OF CONNECTIONS.	1'-6"	AV
BLUETOOTH INPUT MODULE	1'-6"	BT
AV TOUCHSCREEN CONTROL STATION	46"	CS
LOCAL SOUND SYSTEM HEADEND	REFER TO SPECS.	LS

DESCRIPTION	MOUNTING HEIGHT	SYMBOL
SECURITY PANIC ALARM		
PANIC ALARM BUTTON	SEE DRAWINGS	PB
PANIC ALARM ANNUNCIATOR	46"	PA
PANIC ALARM STROBE - REFER TO SPECIFICATIONS FOR LENS AND HOUSING COLOR	SAME AS FIRE ALARM	PS PS
PANIC ALARM POWER SUPPLY CABINET	5'-0"	SEC-P
SECURITY INTERCOM		
AUDIO/VIDEO INTERCOM STATION: MASTER WITH SELECTIVE DOOR CONTROLS, POWER SUPPLIES & DOOR RELAY CONTACTS AS REQUIRED FOR OPERATION OF ANY DOOR IN THE SYSTEM AND VIEWING OF ANY AUDIO/VIDEO INTERCOM REMOTE ON THE SYSTEM. AIPHONE#IX-MV W/DESK STAND - COLOR BY ARCHITECT.	DESK MOUNT	IM
AUDIO/VIDEO INTERCOM STATION: REMOTE WITH FLUSH-MTD S.S. ENCLOSURE. AIPHONE #IX-DVF.	46"	IR
SECURITY ACCESS CONTROL		
DOOR ALARM	DOOR FRAME	DA DA
DOOR POSITION SWITCH	DOOR FRAME	DP
MAGNETIC LOCK(S)	ABV DOOR	ML
ELECTRIC LOCKSET	AT LATCH	EL
DOOR DELAYED EGRESS/ELECTRIFIED PANIC MECHANISM	ABV DOOR	DE
ELECTRIC STRIKE	AT LATCH	ES
AUTOMATIC DOOR CONNECTION (MAY ALSO HAVE ELECTRIC STRIKE/MAG-LOCK/ELECTRIFIED PANIC CONNECTION - SEE ARCHITECTURAL HARDWARE SPECIFICATIONS)	CLG	AD
DOOR RELEASE PUSH-PLATE / INFRA-RED OPERATOR STATION. PROVIDE ANY ADDITIONAL ROUGH-IN FOR "EMERGENCY RELEASE" OPERATOR STATIONS AS REQUIRED.	46"	PP
DOOR RELEASE KEYSWITCH STATION	6'-0"	KS
DOOR RELEASE KEYPAD STATION	46"	KP
DOOR RELEASE PROXIMITY READER STATION. PROVIDE ANY ADDITIONAL ROUGH-IN FOR "EMERGENCY RELEASE" OPERATOR STATIONS AS REQUIRED.	46"	PR
SAME AS "PR" EXCEPT MULLION MOUNT	46"	PR M
MOTION SENSOR DOOR CONTROL	CLG	MS MS
PUSH-TO-EXIT BUTTON	46"	PE
REMOTE DOOR RELEASE PUSH-BUTTON	8" ACT	RR
RECESSED JUNCTION BOX	SEE DRAWINGS	JB JB
ACCESS CONTROL HEADEND	5'-0"	SEC-A
SECURITY CCTV VIDEO SURVEILLANCE		
CCTV CAMERA: CEILING MOUNT DOME (TEXT INDICATES TYPE) REFER TO SCHEDULE FOR TYPES	CLG	CC
CCTV CAMERA: WALL MOUNT DOME (TEXT INDICATES TYPE) REFER TO SCHEDULE FOR TYPES	WALL	WC
INDICATES EXTERIOR CAMERA RATED FOR CONDITIONS, WET LOCATION LISTED, WITH AUXILLARY HEATER		WP
INDICATES CAMERA WITH PAN/TILT/ZOOM FUNCTION		PTZ
CCTV HEAD END	SEE DRAWINGS	SEC-C
SECURITY INTRUSION DETECTION		
MOTION DETECTOR (WALL OR CEILING MOUNT)	CLG	MD MD
GLASS BREAK SENSOR (WALL OR CEILING MOUNT)	CLG	GB GB
LOCAL SOUNDER	SEE DRAWINGS	LS LS
INTRUSION DETECTION KEYPAD CONTROLLER	46"	ID
SECURITY SYSTEM HEAD END	5'-0"	SEC
DATA / VOICE		
DATA OUTLET : NUMBER BESIDE OUTLET INDICATES NUMBER OF DATA JACKS. NO NUMBER INDICATES 1 JACK.	1'-6"	2D
VOICE OUTLET : NUMBER BESIDE OUTLET INDICATES NUMBER OF VOICE JACKS. NO NUMBER INDICATES 1 JACK.	1'-6"	
COMBINATION OUTLET : NUMBER BESIDE OUTLET INDICATES NUMBER OF DATA/VOICE JACKS	1'-6"	2D/1V
SLASH THROUGH ANY DEVICE INDICATES MOUNTING ABOVE COUNTERTOP 4" ABOVE BACKSPLASH		
OUTLET (VOICE ONLY) : PAYPHONE TYPE	AS REQ'D.	PAY
DATA RACK: TWO POST. REFER TO COMMUNICATIONS RISERS AND SPECIFICATIONS FOR ADDITIONAL REQUIREMENTS.		
DATA RACK: FOUR POST. REFER TO COMMUNICATIONS RISERS AND SPECIFICATIONS FOR ADDITIONAL REQUIREMENTS.		
TELECOMMUNICATIONS SYSTEM BACKBOARD. PROVIDE 96"H x 3/4"D FIRE-RETARDENT PLYWOOD BACKBOARD WITH TWO (2) COATS OF NON-C0NDUCTIVE, FIRE-RETARDANT LIGHT GRAY PAINT, #3/0 TO GROUND BAR AT MAIN SERVICE SWITCHBOARD, 30-PT GROUND BAR AND A 6'-0", #3 AWG PIGTAIL AT BACKBOARD. INSTALL BOARD AT 2' AFF. (LENGTH OF BOARD AS INDICATED ON FLOOR PLAN)		
WIRELESS ACCESS POINT OUTLET WITH PROVISIONS FOR (2 DATA OUTLET FOR ANTENNA. PROVIDE A COMPLETE DATA OUTLET WITH FACEPLATE ABOVE CEILING, MOUNTED AT AN ACCESSIBLE HEIGHT NO MORE THAN 24" ABOVE CEILING. AT EACH OUTLET, PROVIDE A 20' COIL OF CABLE AHEAD OF THE OUTLET FOR ADJUSTMENT OF FINAL OUTLET LOCATION. THE CONTRACTOR SHALL COORDINATE EXACT LOCATIONS WITH THE OWNER AND ADJUST OUTLET LOCATIONS AT SUBSTANTIAL COMPLETION TO ACCOMMODATE OWNER'S WAP LOCATIONS.	CEILING WALL	WAP WAP

Electrical Legend - Standard (30x42)

1/8" = 1'-0"

ELECTRICAL GENERAL NOTES

A EACH CONTRACTOR, PROPOSER, SUPPLIER AND/OR MANUFACTURER SHALL REFER TO ALL DOCUMENTS PERTAINING TO THIS PROJECT AND COORDINATE ACCORDINGLY SO AS TO ENSURE ADEQUACY OF FIT, COMPLIANCE WITH SPECIFICATIONS, PROPER VOLTAGE AND CURRENT CHARACTERISTICS TO AVOID CONFLICT WITH ANY OTHER BUILDINGS SYSTEMS. VERIFY SAME WITH SHOP DRAWINGS.

B ADDITIONAL ELECTRICAL REQUIREMENTS MAY BE SHOWN ON PLANS FROM OTHER DISCIPLINES IN THIS SET. IT IS THE CONTRACTOR'S RESPONSIBILITY TO REVIEW ALL PLANS AND SPECIFICATIONS FOR A COMPLETE UNDERSTANDING OF THE PROJECT REQUIREMENTS.

C WORK SHALL BE IN ACCORDANCE WITH THE LATEST EDITION OF ALL LOCAL, STATE, AND NATIONAL CODES. INCLUDING BUT NOT LIMITED TO NFPA 70 (NEC), NFPA 72, INTERNATIONAL BUILDING CODES, ETC.

D CONTRACTOR SHALL FOLLOW SEISMIC RESTRAINT AND DESIGN REQUIREMENTS CONTAINED IN LATEST ADOPTED STATE AND INTERNATIONAL BUILDING CODES, WITH ALL AMENDMENTS AS ADOPTED BY THE CURRENT LEGISLATION. REFER TO ELECTRICAL AND STRUCTURAL SPECIFICATIONS FOR ADDITIONAL INFORMATION.

E ALL OFFSETS, TURNS, FITTINGS, TRIM, DETAIL, ETC. MAY NOT BE INDICATED, BUT SHALL BE PROVIDED AS REQUIRED. ADDITIONAL ALLOWANCES SHALL BE INCLUDED FOR SAME AT EACH PROPOSER'S DISCRETION.

F INSTALL NO PIPING, CONDUIT, DUCTWORK, ETC. IN A LOCATION OR IN A MANNER WHICH WILL ALLOW FREEZING OR THE COLLECTION OF CONDENSATION THEREON. IF IN DOUBT, CONTACT THE ENGINEER.

G ADVISE THE ENGINEER OF ANY CONFLICTS, ERRORS, OMISSIONS, ETC. AT LEAST TEN DAYS PRIOR TO BID DATE, TO ALLOW CLARIFICATION BY WRITTEN ADDENDUM.

H WHERE CONFLICTS ARE FOUND BETWEEN DRAWINGS, DETAILS, OR SPECIFICATIONS, THE MORE STRINGENT REQUIREMENT SHALL APPLY. NOTIFY ARCHITECT OF DISCREPANCY IN WRITING.

I DEVIATION FROM SPECIFICATIONS OR PLANS REQUIRES PRIOR WRITTEN APPROVAL FROM THE ENGINEERS AND MUST BE SUBMITTED IN WRITING NO LATER THAN TEN DAYS PRIOR TO THE BID DATE.

J OBSERVE ALL APPLICABLE CODES, RULES AND REGULATIONS THAT MAY APPLY TO THE WORK UNDER THIS CONTRACT. (CITY, COUNTY, LOCAL, STATE, FEDERAL, MUNICIPALITY, UTILITY COMPANY, OSHA, ETC.).

K MOUNTING HEIGHTS FOR WALL MOUNTED DEVICES INDICATED ABOVE FINISHED FLOOR ARE TO CENTER OF DEVICE UON. MOUNTING HEIGHTS TO CEILING SUSPENDED DEVICES ARE TO BOTTOM OF DEVICE UON.

L INSTALL EQUIPMENT, MATERIALS, ETC. IN STRICT ACCORDANCE WITH MANUFACTURER'S RECOMMENDATIONS AND DIRECTIONS. IF IN CONFLICT WITH THE DESIGN INDICATED IN CONTRACT DOCUMENTS, ADVISE THE ENGINEER PRIOR TO INSTALLATION FOR CLARIFICATION.

M DO NOT RECESS PANELBOARD TUBS OR OTHER FLUSH-MOUNTED EQUIPMENT IN WALLS THAT HAVE A FIRE RATING. NO INSTALLATION SHALL DIMINISH OR VOID FIRE RESISTIVE RATINGS IN ANYWAY.

N THE PURPOSE AND INTENT OF ALL OF THE DOCUMENTS PERTAINING TO THIS PROJECT IS TO PROVIDE A COMPLETE, FUNCTIONAL, SAFE, LIKE-NEW FACILITY. ANYTHING LESS SHALL BE UNACCEPTABLE.

O ALL SYSTEMS, EQUIPMENT AND MATERIALS ARE TO BE INSTALLED IN A NEAT AND WORKMANLIKE MANNER. WORK NOT MEETING THIS CRITERION SHALL BE REMOVED AND REINSTALLED SATISFACTORILY. FINAL DETERMINATION OF THE ACCEPTABILITY OF THE QUALITY OF WORK RESIDES WITH THE ENGINEER

P ALL WORK, MATERIALS, EQUIPMENT, ETC. SHALL BE FULLY GUARANTEED FOR ONE FULL CALENDAR YEAR FROM THE DATE OF SUBSTANTIAL COMPLETION AS DOCUMENTED BY THE ENGINEER, UNLESS LONGER WARRANTY PERIODS FOR EQUIPMENT ARE SPECIFIED.

Q UNLESS OTHERWISE SPECIFIED OR INDICATED, ALL EQUIPMENT AND/OR MATERIALS WITHIN OCCUPIED SPACES OR EXPOSED TO VIEW ON THE BUILDING EXTERIOR SHALL BE PRIMED AND FINISHED SO AS TO COMPLEMENT ADJACENT SURFACE, UNLESS OTHERWISE NOTED. COORDINATE WORK AND COLORS WITH ARCHITECT.

R WHERE PENETRATING ROOFING MEMBRANE OR OTHER MATERIALS USED FOR WEATHERPROOFING THE BUILDING, MAKE SUCH PENETRATION IN A WAY THAT WILL NOT VOID OR DIMINISH THE ROOFING WARRANTY OR INTEGRITY IN ANYWAY. COORDINATE ALL SUCH PENETRATIONS WITH THE ROOFING MANUFACTURER AND ARCHITECT.

S THE CONTRACTOR IS RESPONSIBLE FOR ALL UTILITY COMPANY FEES, CASH CONTRIBUTIONS OR OTHER COSTS THAT THE UTILITY COMPANY MAY REQUIRE TO COMPLETE THEIR WORK. (ELECTRIC, TELEPHONE, TELEVISION, DATA, ETC.).

T COORDINATE WITH ARCHITECTURAL FLOOR PLANS, ELEVATIONS AND CASEWORK DETAILS FOR LOCATION OF ADDITIONAL RECEPTACLES, UTILITY OUTLETS, ELECTRICAL DEVICES, ETC.

U CEILING-MOUNTED ELECTRICAL DEVICES SHALL BE CENTERED IN 2'X2' CEILING TILE AND INSTALLED CENTERED ON 2' DIMENSION OF 2'X4' TILE AND ON CENTERLINE OR A QUARTER POINT ON 4' DIMENSION.

V ANY VIBRATING, OSCILLATING OR OTHER NOISE OR MOTION PRODUCING EQUIPMENT SHALL BE ISOLATED FROM SURROUNDING SYSTEMS IN AN APPROVED MANNER. NOISY OR STRUCTURALLY DAMAGING INSTALLATIONS SHALL BE SATISFACTORILY REPLACED OR REPAIRED AT THE INSTALLING CONTRACTORS' EXPENSE. THE FINAL DECISION ON THE SUITABILITY OF A PARTICULAR INSTALLATION'S ACCEPTABILITY SHALL BE THAT OF THE ENGINEER.

W CHECK ALL THREE PHASE MOTORS WITH A PHASE ROTATION METER, PRIOR TO PLACING IN SERVICE.

X PROVIDE DETAILED SHOP DRAWINGS TO ENGINEER PRIOR TO PURCHASING OR INSTALLING ANY EQUIPMENT

Y DEVIATIONS IN SIZES, CAPACITIES, FIT, FINISH, ETC. FOR EQUIPMENT FROM THAT PRIME SPECIFIED SHALL BE THE RESPONSIBILITY OF THE PURCHASER OF THAT EQUIPMENT. ANY PROVISIONS REQUIRED TO ACCOMMODATE A DEVIATION, WHETHER APPROVED BY THE ENGINEER OR NOT, SHALL BE THE RESPONSIBILITY OF THE PURCHASER.

Z THE CONSTRUCTION MANAGER, GENERAL CONTRACTOR, OR WHOMEVER HOLDS THE PRIME CONTRACT(S) FOR THIS CONSTRUCTION IS RESPONSIBLE FOR THE COORDINATION, APPEARANCE, SCHEDULING AND TIMELINESS OF THE WORK OF ALL TRADES, CONTRACTORS, SUPPLIERS, INSTALLERS, ETC. POOR OR UNTIMELY WORK ON THE PART OF ANY SUBCONTRACTOR SHALL BE RESOLVED BY THE PARTY WHO ENGAGED THEM ON THIS PROJECT.

AA WHERE MOUNTING HEIGHTS ARE NOT INDICATED OR ARE IN CONFLICT WITH ANY OTHER BUILDING SYSTEM, CONTACT THE ENGINEER BEFORE AFFECTING INSTALLATION. REFER ALSO TO ARCHITECTURAL INTERIOR AND EXTERIOR ELEVATIONS, CEILING HEIGHTS AND OTHER DETAILS OF THESE DOCUMENTS, AS APPLICABLE.

AB WHERE FIRE-RATED CEILING ASSEMBLIES ARE NOTED, PROVIDE UL-LISTED FIRE-RATED GYPSUM BOARD OR PRE-MANUFACTURED ENCLOSURES ABOVE LUMINAIRES, CEILING DEVICES, ETC. IN OR ON CEILING, AS REQUIRED TO MAINTAIN CEILING RATINGS.

AC COORDINATE THE LOCATION OF DRAINS, ELECTRICAL OUTLETS, GAS OUTLETS, ETC. WITH ALL CASEWORK, KITCHEN EQUIPMENT, MECHANICAL ROOM EQUIPMENT, ETC. PRIOR TO COMMENCING INSTALLATION. WORK NOT SO COORDINATED SHALL BE REMOVED AND PROPERLY INSTALLED AT THE EXPENSE OF THE RESPONSIBLE CONTRACTOR(S).

AD ALL ELECTRICAL COMPONENTS OR EQUIPMENT SHALL BE LISTED AND LABELED BY UNDERWRITER'S LABORATORIES OR OTHER APPROVED LISTING AGENCY. APPROVAL AND LABELING OF INDIVIDUAL COMPONENTS ON AN ASSEMBLY IS NOT ACCEPTABLE AS MEETING THIS REQUIREMENT, UNLESS WAIVED BY THE ENGINEER IN WRITING.

AE ALL WIRING SYSTEMS SHALL BE INSTALLED WITH A MINIMUM OF SPLICES. CONDUCTORS, WHETHER SINGLE OR MULTI-PAIR, SHALL BE INSTALLED CONTINUOUS INSOFAR AS POSSIBLE FROM TERMINAL POINT TO TERMINAL POINT.

AF NO CONDUIT, SUPPORTS, ETC. SHALL BE RUN THROUGH ACCESS CLEARANCES OF EQUIPMENT BY OTHER TRADES (I.E. VAV BOXES). COORDINATE WITH ALL TRADES PRIOR TO CONSTRUCTION.

AG ALL CONTRACTORS SHALL EXERCISE EXTREME CARE IN THE COURSE OF THEIR WORK SO AS TO ENSURE THAT THEY DO NOT INTERRUPT ANY EXISTING SERVICE OR SUB-SERVICE FOR SAFETY PURPOSES. PAY PARTICULAR ATTENTION TO THIS PRECAUTION RELATIVE TO NATURAL GAS AND ELECTRICAL LINES. VERIFY THE LOCATION, SIZE, TYPE, ETC. OF EACH UNDERGROUND OR OVERHEAD UTILITY. ALL WORK SHALL BE PERFORMED IN ACCORDANCE WITH ALL FEDERAL, STATE AND/OR LOCAL RULES, REGULATIONS, STANDARD AND SAFETY REQUIREMENTS. UTILITIES SHALL BE INSTALLED IN ACCORDANCE WITH THE APPLICABLE MUNICIPALITY OR UTILITY COMPANY STANDARDS. IN ALL CASES, THE MOST STRINGENT REQUIREMENT SHALL APPLY.

AH ALL SUPPORTS FOR EQUIPMENT, DEVICES OR FIXTURES SHALL BE UNIQUE, DIRECTLY FROM THE BUILDING STRUCTURE. DO NOT SUPPORT WORK FROM OTHER TRADES EQUIPMENT OR SUPPORTS WITHOUT WRITTEN PERMISSION FROM THE ENGINEER AND CONSENT OF THE OTHER TRADE, IN WRITING.

AI WHERE INTERRUPTING AN EXISTING UTILITY OR SERVICE DELIBERATELY OR ACCIDENTALLY, THE RESPONSIBLE CONTRACTOR SHALL WORK CONTINUOUSLY AS NEEDED TO RESTORE SAME, PROVIDING PREMIUM TIME AS NEEDED.

AJ REFER TO ARCHITECTURAL WALL ELEVATIONS (WHERE GIVEN) FOR HEIGHTS AND MOUNTING RELATIONSHIP OF OUTLETS AND EQUIPMENT. IF IN DOUBT, CONTACT ENGINEER FOR DIRECTION PRIOR TO ROUGH IN.

AK FLUSH OR PEDESTAL TYPE FLOOR OUTLETS/BOXES, AS INDICATED ON PLAN, SHALL BE LOCATED BY DIMENSIONS PROVIDED BY THE ARCHITECT, UNLESS OTHERWISE SHOWN ON PLANS. IF IN DOUBT, CONTACT THE ENGINEER PRIOR TO ROUGHING-IN ANY WORK.

AL AS APPLICABLE, REFER TO ARCHITECTURAL PHASING PLANS AND PHASING BOUNDARIES ON THESE DRAWINGS FOR SEQUENCING OF WORK, FULL EXTENT OF AREAS INVOLVED, EXTENT OF CEILING WORK, ETC. PROVIDE TEMPORARY CONNECTIONS FOR CIRCUITS AND WORK AS REQUIRED TO MAINTAIN SEQUENCE OF THE WORK FROM PHASE TO PHASE.

AM THIS CONTRACTOR SHALL BE RESPONSIBLE FOR ALL CUTTING AND PATCHING REQUIRED FOR HIS WORK. ALL CUTTING AND PATCHING SHALL BE IN ACCORDANCE WITH THE ARCHITECT'S STANDARDS FOR SUCH WORK.

AN ALL WORK SHALL BE CONCEALED UNLESS SPECIFICALLY INDICATED TO BE EXPOSED, OR REQUIRED TO BE EXPOSED. IF IN DOUBT, CONTACT THE ENGINEER FOR CLARIFICATIONS PRIOR TO INSTALLING ANY SUCH WORK.

AO INTERRUPTION OF ANY EXISTING SERVICES SHALL BE COORDINATED WITH THE OWNER, GENERAL CONTRACTOR, UTILITY COMPANY AS NECESSARY, AND THE ARCHITECT, AT LEAST TWO WEEKS IN ADVANCE OF ANTICIPATED INTERRUPTION. A SCHEDULE FOR THESE OUTAGES SHALL BE DEVELOPED AND AGREED UPON BETWEEN THE PARTIES MENTIONED TO AVOID UNNECESSARY INCONVENIENCE TO THE OWNER OR ANY AFFECTED PARTY. NOTIFY THE UTILITY COMPANY OF ANY ANTICIPATED SERVICES REQUIRED TWO WEEKS IN ADVANCE, IN WRITING. IF UTILITY COMPANY REQUIRES A LONGER NOTIFICATION PERIOD, SO PROVIDE.

AP WHERE BACKBOXES ARE LOCATED IN THE SAME VERTICAL CHANNEL/STUD SPACE ON OPPOSITE SIDES OF THE SAME WALL, PROVIDE SOUND-INSULATING PUTTY AROUND BOXES AS REQUIRED TO ELIMINATE SOUND TRANSMISSION FROM ROOM TO ROOM.

AQ JUNCTION BOXES LOCATED ABOVE ACCESSIBLE CEILINGS SHALL BE LOCATED NO MORE THAN 36" ABOVE CEILING LEVEL. LABEL EACH BOX IN AREA OF WORK WITH A PERMANENT MARKER OR IN ACCORDANCE WITH SPECIFICATIONS, WHICHEVER IS MORE STRINGENT.

AR ALL MATERIALS FURNISHED AND ALL WORK INSTALLED SHALL COMPLY WITH THE CURRENT EDITION OF THE NATIONAL ELECTRICAL CODES, NATIONAL FIRE CODES OF THE NATIONAL FIRE PROTECTION ASSOCIATION, THE REQUIREMENTS OF LOCAL UTILITY COMPANIES, AND WITH THE REQUIREMENTS OF ALL GOVERNMENTAL AGENCIES OR DEPARTMENTS HAVING JURISDICTION. IF ANY CONFLICTS OR DISCREPANCIES OCCUR THE MOST STRINGENT SHALL APPLY.

AS DO NOT SCALE FROM DRAWINGS, AS PRINTING DISTORTS SCALE. WORK SHALL BE LAID OUT FROM DIMENSIONED DRAWINGS, OR DIMENSIONS SUPPLIED TO THE CONTRACTOR.

AT NOISY WORK, WORK OUTSIDE CONSTRUCTION BARRIERS, WORK IN OCCUPIED AREAS, ETC. SHALL BE PERFORMED AFTER HOURS OR ON WEEKENDS. COORDINATE EXACT SCHEDULING WITH FACILITY PRIOR TO CONSTRUCTION.

AU ALL ITEMS HAVING KEYED LOCKS/OPERATORS SHALL HAVE CORED LOCKS/OPERATORS. ALL KEYING SHALL MATCH THE OWNER'S EXISTING KEY-WAYS. COORDINATE EXACT REQUIREMENTS WITH OWNER PRIOR TO CONSTRUCTION.

AV REFER TO ARCHITECTURAL PLANS FOR PHASING REQUIREMENTS. WORK SHALL BE COMPLETED IN PHASES PER THE PHASING PLAN AND AS COORDINATED WITH OWNER AND GENERAL CONTRACTOR. PROVIDE ALL REQUIRED INCREMENTAL INSPECTIONS, CERTIFICATIONS, ETC. AND ALL TEMPORARY SERVICES AS REQUIRED BY OWNER TO ACCOMPLISH THE PHASING PLAN.

ELECTRICAL DEMOLITION NOTES

A DOTTED LINES INDICATE ITEMS FOR REMOVAL (UON) AND SOLID HALFTONE LINES INDICATE EXISTING ITEMS TO REMAIN.

B THE CONTRACTOR SHALL MAINTAIN THE CONTINUITY OF EXISTING CIRCUITS THAT CONTAIN DEVICES OR EQUIPMENT THAT ARE TO REMAIN. WHEN DEMOLITION OF AN ELECTRICAL DEVICE (OR CIRCUIT) IS INDICATED ON THE DRAWINGS: THE CONTRACTOR SHALL ENSURE THAT OTHER DEVICES OR EQUIPMENT "UPSTREAM" OR "DOWNSTREAM" ON THE CIRCUITS SHALL REMAIN IN "PRE-DEMOLITION" WORKING ORDER. "LEFT-OVER" CIRCUIT BREAKERS SHALL REMAIN, BE SWITCHED TO OFF POSITION, AND BE LABELED AS SPARES IN THEIR PANELS. PROVIDE NEW TYPEWRITTEN DIRECTORIES FOR ALL PANELS AFFECTED.

C LOCATIONS OF DEVICES, CONNECTIONS, ETC., INDICATED ON THIS DRAWING WERE TAKEN FROM VARIOUS SOURCES. THEY ARE DIAGRAMMATIC ONLY AND ARE SUBJECT TO VARIATION FROM EXISTING CONDITIONS. CERTAIN EXISTING ELEMENTS MAY NOT BE INDICATED AT ALL. THE CONTRACTOR PROPOSING TO DO ANY PART OF THE WORK INDICATED HEREON SHALL VISIT THIS SITE AND DETERMINE TO HIS SATISFACTION THAT THEY MAY COMPLETE ALL WORK REQUIRED FOR THE BID WHICH HE PROPOSES.

D REMOVE ALL ASSOCIATED BACKBOXES, CONDUIT AND CONDUCTORS FOR DEVICES / FIXTURES / ETC. BEING REMOVED (BACK TO SOURCE), WHETHER INDICATED OR NOT (UON). CONTRACTOR SHALL PATCH AND REPAIR ANY EXISTING WALLS, FLOORS OR CEILINGS WHERE DEVICES ARE SHOWN TO BE REMOVED (PATCH AND REPAIR TO RECEIVE NEW FINISHES - SEE ARCHITECTURAL PLANS).

E COORDINATE DISPOSAL OF ALL FIXTURES, DEVICES, ETC. (INDICATED FOR DEMOLITION) WITH OWNER. TURN OVER ITEMS REMOVED TO OWNER AT THEIR OPTION.

F COORDINATE WITH OTHER TRADES FOR THE REMOVAL AND/OR RELOCATION OF ELECTRICAL DEVICES AND CONNECTIONS ASSOCIATED WITH THEIR EQUIPMENT.

G PROVIDE TEMPORARY EMERGENCY EXIT LIGHTS AT CONSTRUCTION BARRIERS AS REQUIRED.

H CONTRACTOR SHALL PATCH AND REPAIR ALL EXISTING WALLS / CEILINGS AS REQUIRED WHERE DEVICES ARE BEING REMOVED OR INSTALLED.

I UNUSED/ABANDONED CONDUCTORS DISCOVERED ABOVE ACCESSIBLE CEILINGS SHALL BE REMOVED IN ACCORDANCE WITH NEC REQUIREMENTS.

J EXISTING ELECTRICAL SYSTEMS IN CONFLICT WITH CONSTRUCTION SHALL BE RELOCATED TO PERMIT INSTALLATION OF DEVICES AND EQUIPMENT SHOWN ON PLANS.

K CONTRACTOR SHALL SEAL ALL EXISTING AND NEW PENETRATIONS OF BUILDING ENVELOPE (EXTERIOR WALLS, ROOF, ETC.) WATER-TIGHT AND AS APPROVED BY ARCHITECT AND ENGINEER. ROOFING SHALL BE RESTORED BY A LICENSED ROOFING CONTRACTOR BASED ON WRITTEN INSTRUCTIONS AND DETAILS FROM ROOFING MANUFACTURER AS REQUIRED TO MAINTAIN ROOF WARRANTY. REFER TO ARCHITECTURAL AND ENGINEERING PLANS AND SPECIFICATIONS FOR FURTHER REQUIREMENTS.

L DEVICES INDICATED WITH AN "R" SHALL BE RELOCATED. REMOVE, PROTECT, AND REINSTALL IN NEW LOCATION INDICATED ON NEW WORK PLANS. INTERCEPT AND EXTEND ALL EXISTING CABLING TO NEW LOCATION. CLEAN AND RE-LAMP RELOCATED LUMINAIRES.

M ALL EXISTING PANELS AFFECTED BY THIS CONTRACTOR'S WORK SHALL BE PROVIDED WITH NEW TYPE-WRITTEN PANEL DIRECTORIES AND INSERT SLEEVES. PANEL DIRECTORIES SHALL NOT USE ROOM NAMES OR NUMBERS FROM THESE DRAWINGS. DIRECTORIES SHALL BE DETAILED AND COORDINATED WITH OWNER'S SUITE NUMBERS, FINAL ROOM NUMBERS, IT RACK NAMES, WORKSTATION DESIGNATIONS, ETC. UNUSED BREAKERS SHALL BE IN OFF POSITION.

N CONTRACTOR TO VERIFY THAT THERE ARE NO ELECTRICAL CIRCUITS IN CHASES BEING REMOVED UNDER DEMOLITION WHICH REMAIN IN SERVICE AND CANNOT BE REMOVED. SHOULD SUCH CIRCUITS BE ENCOUNTERED, THE CONTRACTOR IS TO REROUTE AND RECONNECT AS REQUIRED TO MAINTAIN SERVICE.

JRA architects
3225 Summit Square Place, Suite 200
Lexington, Kentucky 40509
859.252.6781

NOT FOR CONSTRUCTION

RESERVED FOR AHJ STAMP

CMTA

RFP 2 DRAWINGS

UK INDOOR TRACK FACILITY

UNIVERSITY OF KENTUCKY
LEXINGTON, KENTUCKY

ELECTRICAL

PROJECT	202258
DATE	8.31.22

REVISIONS

No.	Description	Date

JRA ARCHITECTS HAS RETAINED AN ELECTRONIC VERSION OF THESE DRAWINGS. THE CLIENT AGREES NOT TO REUSE THESE DRAWINGS - IN ELECTRONIC OR ANY OTHER FORMAT - IN WHOLE, OR IN PART, FOR ANY PURPOSE OTHER THAN FOR THE PROJECT. THE CLIENT AGREES NOT TO TRANSFER THESE ELECTRONIC FILES TO OTHERS WITHOUT THE PRIOR WRITTEN CONSENT OF THE ARCHITECT. THE CLIENT FURTHER AGREES TO WAIVE ALL CLAIMS AGAINST THE ARCHITECT RESULTING IN ANY WAY FROM ANY UNAUTHORIZED CHANGES TO OR REUSE OF THE ELECTRONIC FILES FOR ANY OTHER PROJECT BY ANYONE OTHER THAN THE ARCHITECT.

ELECTRICAL LEGEND

E-101

COPYRIGHT 2022 - JRA, INC.

8/31/2022 4:37:49 PM

C:\Users\samos\Documents\XXTF22 Central File_nolanjamos.rvt

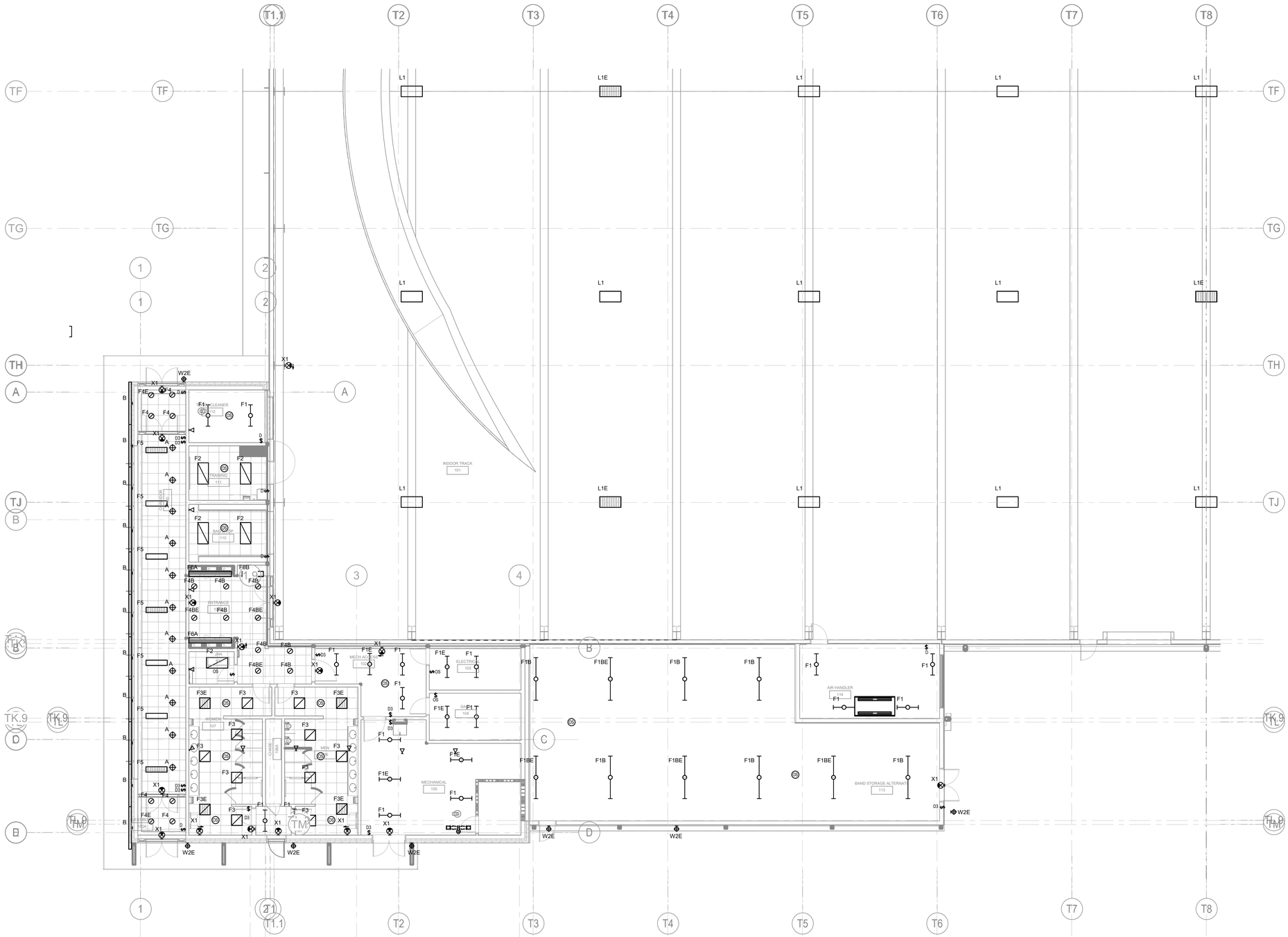

1 **FIRST FLOOR LIGHTING PLAN - AREA A**
1/8" = 1'-0"

8/31/2022 4:37:53 PM

JRA architects
3225 Summit Square Place, Suite 200
Lexington, Kentucky 40509
859.252.6781

NOT FOR CONSTRUCTION

RESERVED FOR AHJ STAMP

CMTA

RFP 2 DRAWINGS

UK INDOOR TRACK FACILITY

UNIVERSITY OF KENTUCKY
LEXINGTON, KENTUCKY

ELECTRICAL

PROJECT	202258
DATE	8.31.22

REVISIONS

No.	Description	Date

JRA ARCHITECTS HAS RETAINED AN ELECTRONIC VERSION OF THESE DRAWINGS. THE CLIENT AGREES NOT TO REUSE THESE DRAWINGS - IN ELECTRONIC OR ANY OTHER FORMAT - IN WHOLE, OR IN PART, FOR ANY PURPOSE OTHER THAN FOR THE PROJECT. THE CLIENT AGREES NOT TO TRANSFER THESE ELECTRONIC FILES TO OTHERS WITHOUT THE PRIOR WRITTEN CONSENT OF THE ARCHITECT. THE CLIENT FURTHER AGREES TO WAIVE ALL CLAIMS AGAINST THE ARCHITECT RESULTING IN ANY WAY FROM ANY UNAUTHORIZED CHANGES TO OR REUSE OF THE ELECTRONIC FILES FOR ANY OTHER PROJECT BY ANYONE OTHER THAN THE ARCHITECT.

FIRST FLOOR LIGHTING PLAN - AREA A

E-201

COPYRIGHT 2022 - JRA, INC.

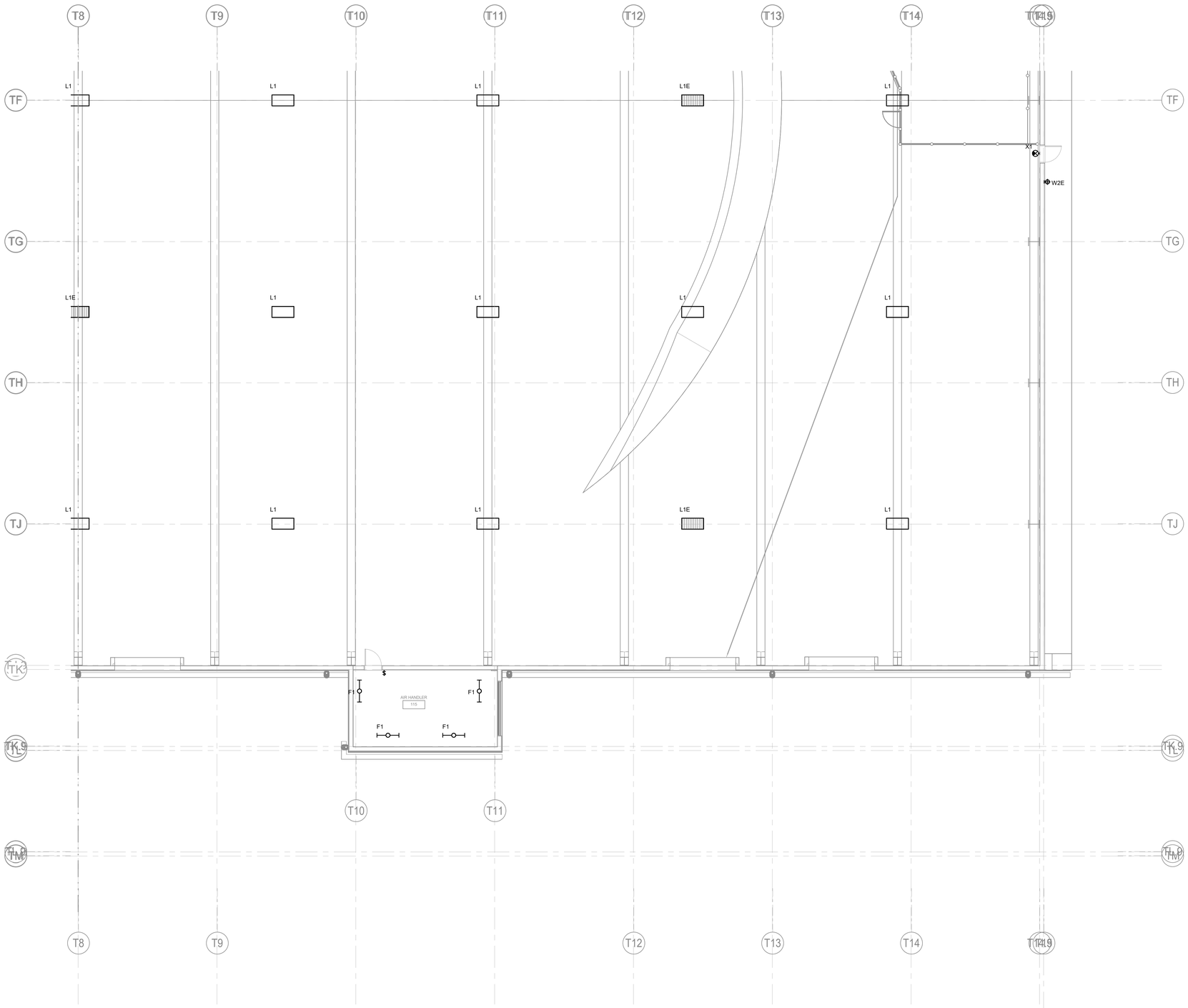

1 FIRST FLOOR LIGHTING PLAN - AREA B
1/8" = 1'-0"

JRA architects
3225 Summit Square Place, Suite 200
Lexington, Kentucky 40509
859.252.6781

NOT FOR CONSTRUCTION

RESERVED FOR AHJ STAMP

CMTA

RFP 2 DRAWINGS

UK INDOOR TRACK FACILITY
UNIVERSITY OF KENTUCKY
LEXINGTON, KENTUCKY

ELECTRICAL

PROJECT	202258
DATE	8.31.22

REVISIONS

No.	Description	Date

JRA ARCHITECTS HAS RETAINED AN ELECTRONIC VERSION OF THESE DRAWINGS. THE CLIENT AGREES NOT TO REUSE THESE DRAWINGS - IN ELECTRONIC OR ANY OTHER FORMAT - IN WHOLE, OR IN PART, FOR ANY PURPOSE OTHER THAN FOR THE PROJECT. THE CLIENT AGREES NOT TO TRANSFER THESE ELECTRONIC FILES TO OTHERS WITHOUT THE PRIOR WRITTEN CONSENT OF THE ARCHITECT. THE CLIENT FURTHER AGREES TO WAIVE ALL CLAIMS AGAINST THE ARCHITECT RESULTING IN ANY WAY FROM ANY UNAUTHORIZED CHANGES TO OR REUSE OF THE ELECTRONIC FILES FOR ANY OTHER PROJECT BY ANYONE OTHER THAN THE ARCHITECT.

FIRST FLOOR LIGHTING PLAN - AREA B

E-202

COPYRIGHT 2022 - JRA, INC.

C:\Users\namos\Documents\XKTF22 Central File_nolanjamos.rvt
8/31/2022 4:37:54 PM

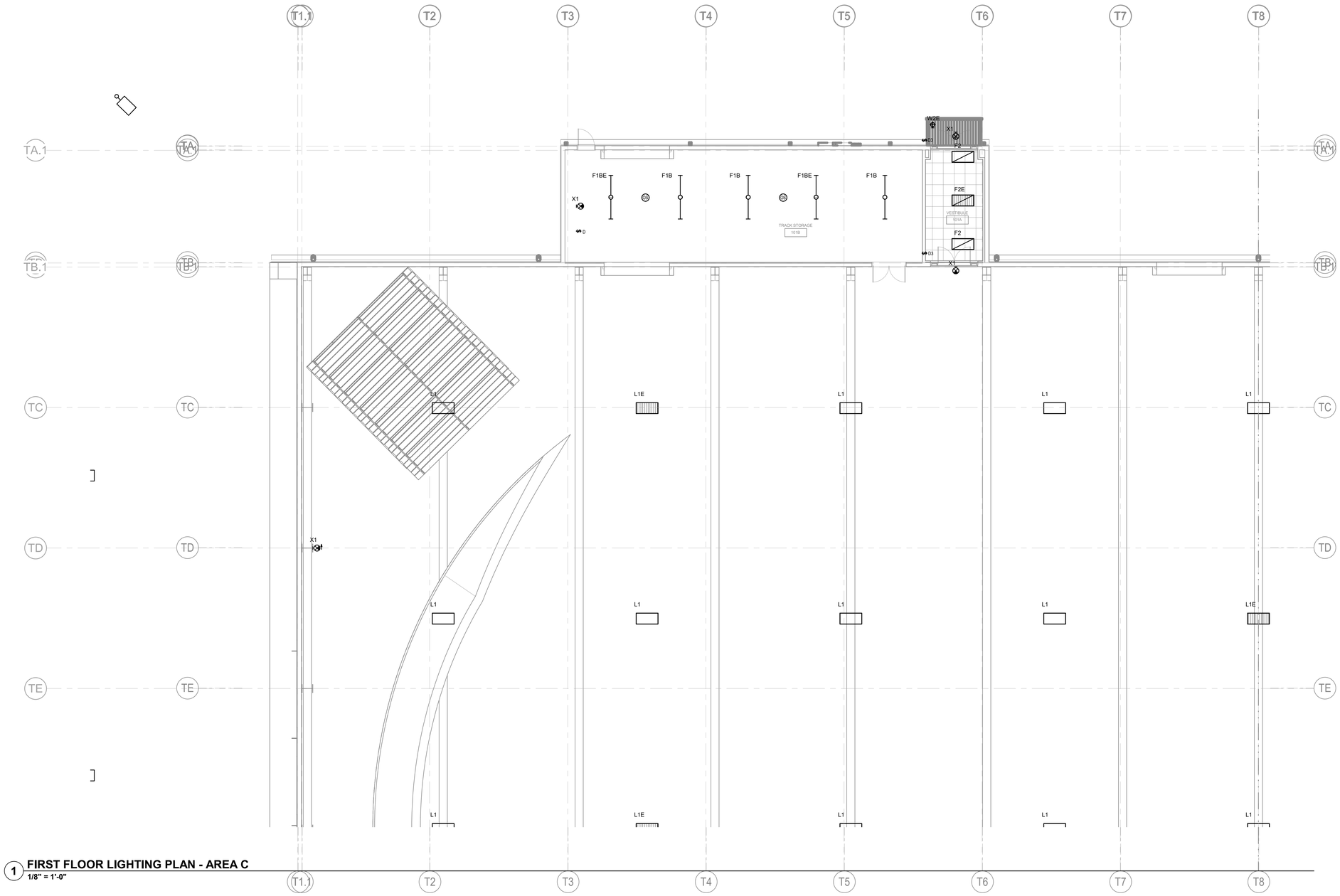

1 **FIRST FLOOR LIGHTING PLAN - AREA C**
1/8" = 1'-0"

JRA architects
3225 Summit Square Place, Suite 200
Lexington, Kentucky 40509
859.252.6781

NOT FOR CONSTRUCTION

RESERVED FOR AHJ STAMP

CMTA

RFP 2 DRAWINGS

UK INDOOR TRACK FACILITY
UNIVERSITY OF KENTUCKY
LEXINGTON, KENTUCKY

ELECTRICAL

PROJECT	202258
DATE	8.31.22

REVISIONS

No.	Description	Date

JRA ARCHITECTS HAS RETAINED AN ELECTRONIC VERSION OF THESE DRAWINGS. THE CLIENT AGREES NOT TO REUSE THESE DRAWINGS - IN ELECTRONIC OR ANY OTHER FORMAT - IN WHOLE, OR IN PART, FOR ANY PURPOSE OTHER THAN FOR THE PROJECT. THE CLIENT AGREES NOT TO TRANSFER THESE ELECTRONIC FILES TO OTHERS WITHOUT THE PRIOR WRITTEN CONSENT OF THE ARCHITECT. THE CLIENT FURTHER AGREES TO WAIVE ALL CLAIMS AGAINST THE ARCHITECT RESULTING IN ANY WAY FROM ANY UNAUTHORIZED CHANGES TO OR REUSE OF THE ELECTRONIC FILES FOR ANY OTHER PROJECT BY ANYONE OTHER THAN THE ARCHITECT.

FIRST FLOOR LIGHTING PLAN - AREA C

E-203

COPYRIGHT 2022 - JRA, INC.

C:\Users\namos\Documents\XKTF22 Central File_nolanjamos.rvt
8/31/2022 4:37:55 PM

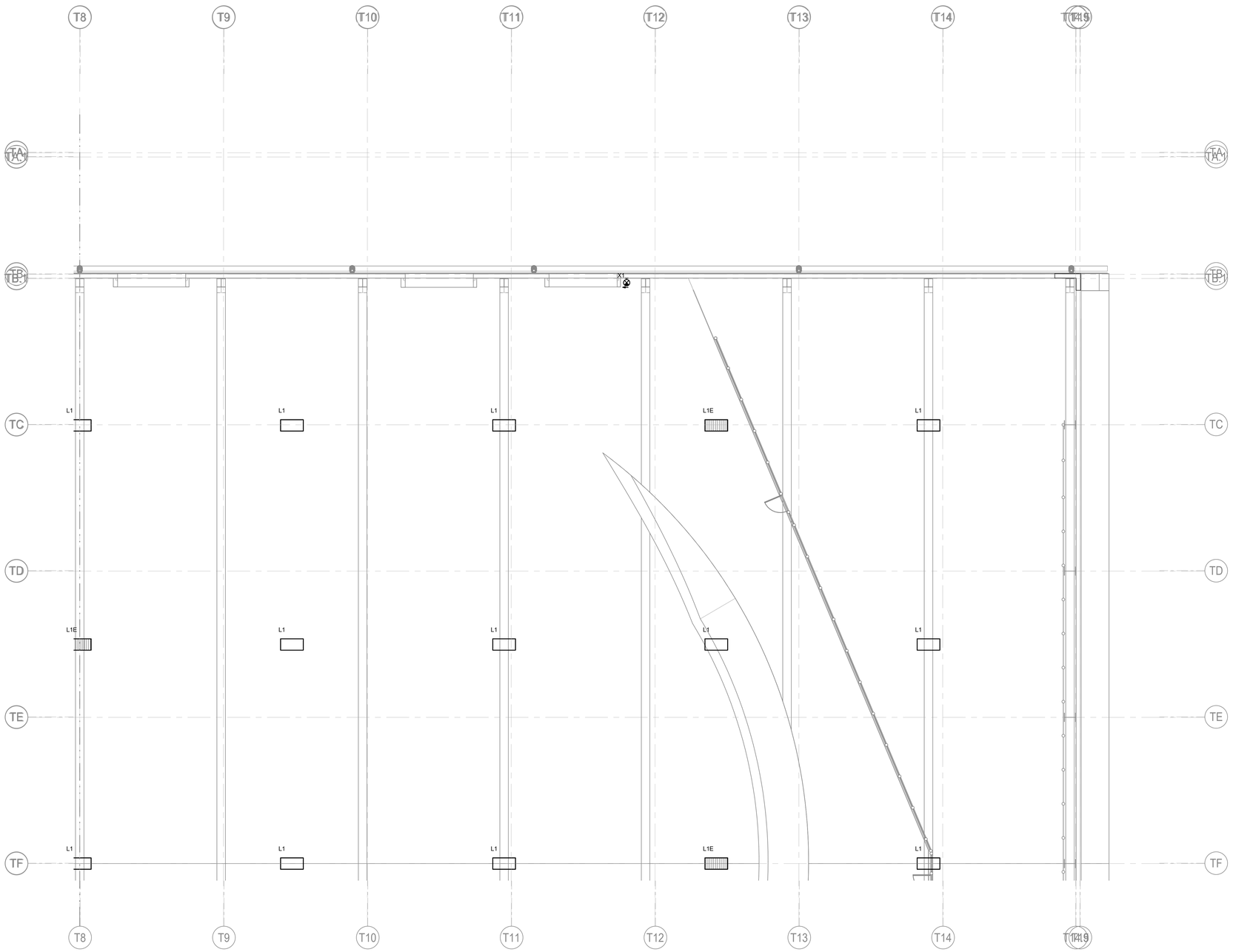

1 **FIRST FLOOR LIGHTING PLAN - AREA D**
1/8" = 1'-0"

C:\Users\samos\Documents\XXTF22 Central File_nolanjamos.rvt

8/31/2022 4:37:56 PM

JRA architects
3225 Summit Square Place, Suite 200
Lexington, Kentucky 40509
859.252.6781

NOT FOR CONSTRUCTION

RESERVED FOR AHJ STAMP

CMTA

RFP 2 DRAWINGS

UK INDOOR TRACK FACILITY

UNIVERSITY OF KENTUCKY
LEXINGTON, KENTUCKY

ELECTRICAL

PROJECT	202258
DATE	8.31.22

REVISIONS

No.	Description	Date

JRA ARCHITECTS HAS RETAINED AN ELECTRONIC VERSION OF THESE DRAWINGS. THE CLIENT AGREES NOT TO REUSE THESE DRAWINGS - IN ELECTRONIC OR ANY OTHER FORMAT - IN WHOLE, OR IN PART, FOR ANY PURPOSE OTHER THAN FOR THE PROJECT. THE CLIENT AGREES NOT TO TRANSFER THESE ELECTRONIC FILES TO OTHERS WITHOUT THE PRIOR WRITTEN CONSENT OF THE ARCHITECT. THE CLIENT FURTHER AGREES TO WAIVE ALL CLAIMS AGAINST THE ARCHITECT RESULTING IN ANY WAY FROM ANY UNAUTHORIZED CHANGES TO OR REUSE OF THE ELECTRONIC FILES FOR ANY OTHER PROJECT BY ANYONE OTHER THAN THE ARCHITECT.

FIRST FLOOR LIGHTING PLAN - AREA D

E-204

COPYRIGHT 2022 - JRA, INC.

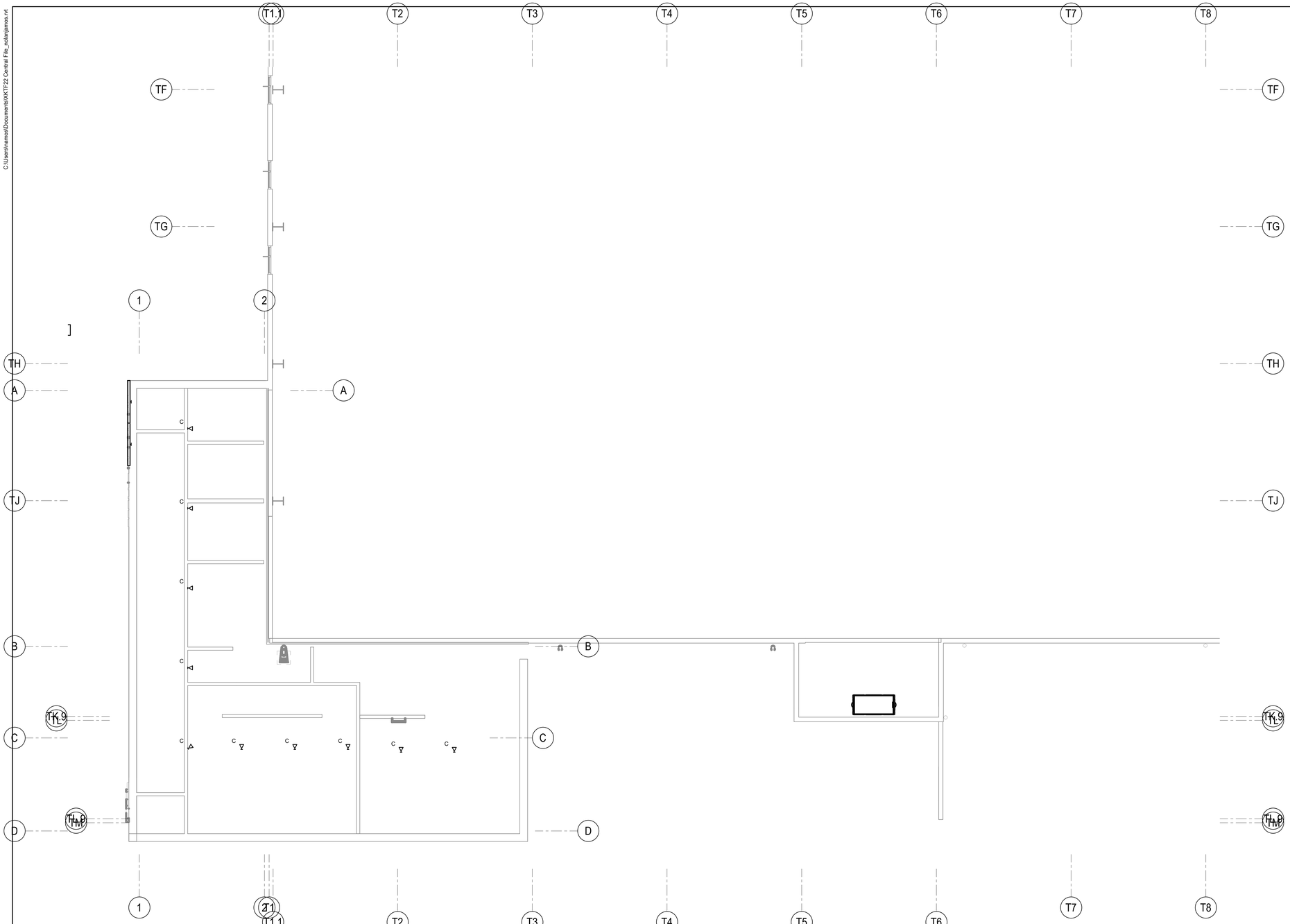

1 LOWER ROOF LIGHTING
1/8" = 1'-0"

C:\Users\namos\Documents\XKTF22 Central File_nolanjamos.rvt

8/31/2022 4:37:57 PM

JRA architects
3225 Summit Square Place, Suite 200
Lexington, Kentucky 40509
859.252.6781

NOT FOR CONSTRUCTION

RESERVED FOR AHJ STAMP

CMTA

RFP 2 DRAWINGS

UK INDOOR TRACK FACILITY
UNIVERSITY OF KENTUCKY
LEXINGTON, KENTUCKY

ELECTRICAL

PROJECT	202258
DATE	8.31.22

REVISIONS

No.	Description	Date

JRA ARCHITECTS HAS RETAINED AN ELECTRONIC VERSION OF THESE DRAWINGS. THE CLIENT AGREES NOT TO REUSE THESE DRAWINGS - IN ELECTRONIC OR ANY OTHER FORMAT - IN WHOLE, OR IN PART, FOR ANY PURPOSE OTHER THAN FOR THE PROJECT. THE CLIENT AGREES NOT TO TRANSFER THESE ELECTRONIC FILES TO OTHERS WITHOUT THE PRIOR WRITTEN CONSENT OF THE ARCHITECT. THE CLIENT FURTHER AGREES TO WAIVE ALL CLAIMS AGAINST THE ARCHITECT RESULTING IN ANY WAY FROM ANY UNAUTHORIZED CHANGES TO OR REUSE OF THE ELECTRONIC FILES FOR ANY OTHER PROJECT BY ANYONE OTHER THAN THE ARCHITECT.

LOWER ROOF LIGHTING PLAN

E-205

COPYRIGHT 2022 - JRA, INC.

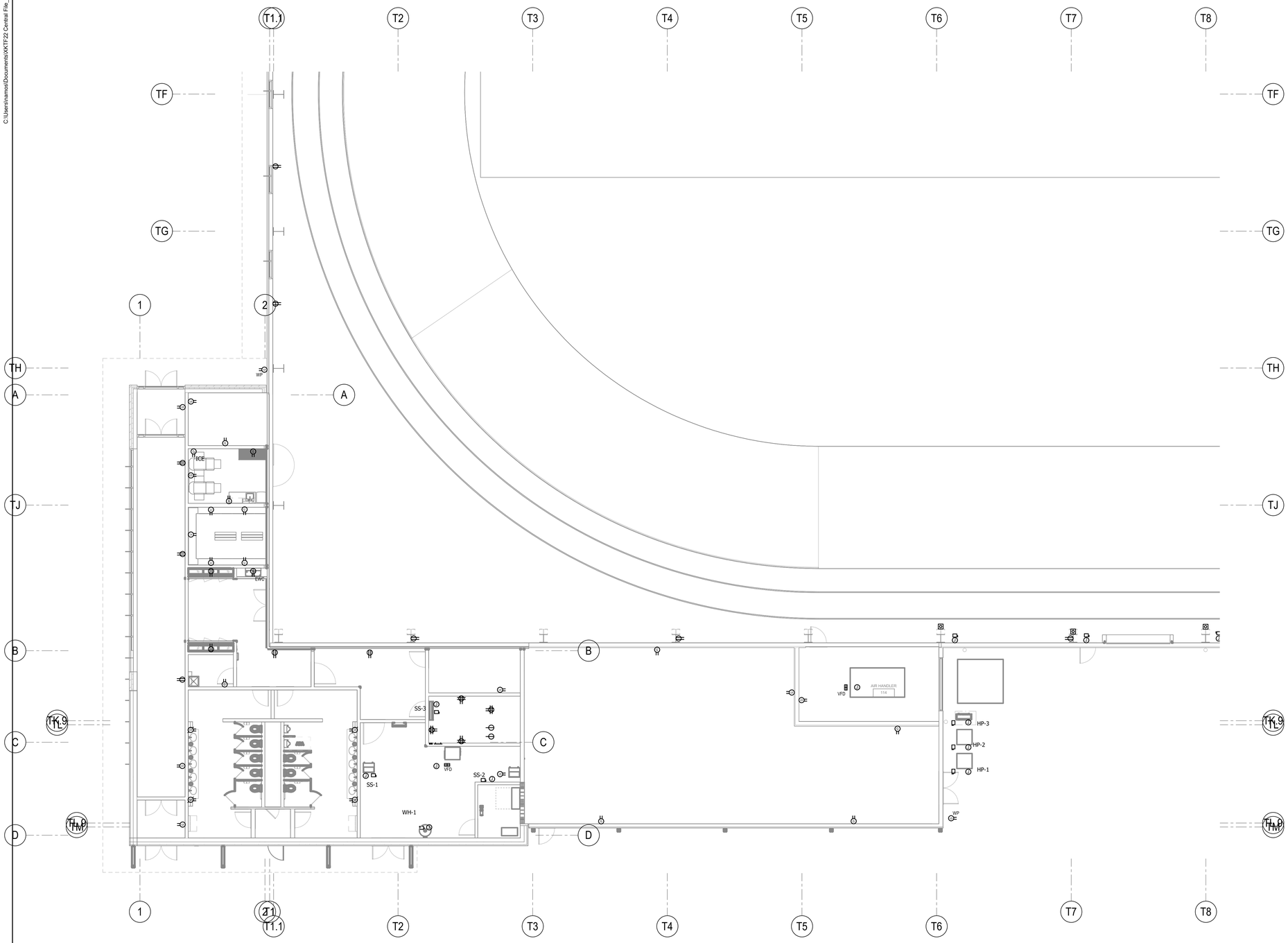

1 **FIRST FLOOR POWER PLAN - AREA A**
1/8" = 1'-0"

JRA architects
3225 Summit Square Place, Suite 200
Lexington, Kentucky 40509
859.252.6781

NOT FOR CONSTRUCTION

RESERVED FOR AHJ STAMP

CMTA

RFP 2 DRAWINGS

UK INDOOR TRACK FACILITY
UNIVERSITY OF KENTUCKY
LEXINGTON, KENTUCKY

ELECTRICAL

PROJECT	202258
DATE	8.31.22

REVISIONS

No.	Description	Date

JRA ARCHITECTS HAS RETAINED AN ELECTRONIC VERSION OF THESE DRAWINGS. THE CLIENT AGREES NOT TO REUSE THESE DRAWINGS - IN ELECTRONIC OR ANY OTHER FORMAT - IN WHOLE, OR IN PART, FOR ANY PURPOSE OTHER THAN FOR THE PROJECT. THE CLIENT AGREES NOT TO TRANSFER THESE ELECTRONIC FILES TO OTHERS WITHOUT THE PRIOR WRITTEN CONSENT OF THE ARCHITECT. THE CLIENT FURTHER AGREES TO WAIVE ALL CLAIMS AGAINST THE ARCHITECT RESULTING IN ANY WAY FROM ANY UNAUTHORIZED CHANGES TO OR REUSE OF THE ELECTRONIC FILES FOR ANY OTHER PROJECT BY ANYONE OTHER THAN THE ARCHITECT.

FIRST FLOOR POWER PLAN - AREA A

E-301

COPYRIGHT 2022 - JRA, INC.

C:\Users\namos\Documents\XKTF22 Central File_nolanjamos.rvt

8/31/2022 4:37:59 PM

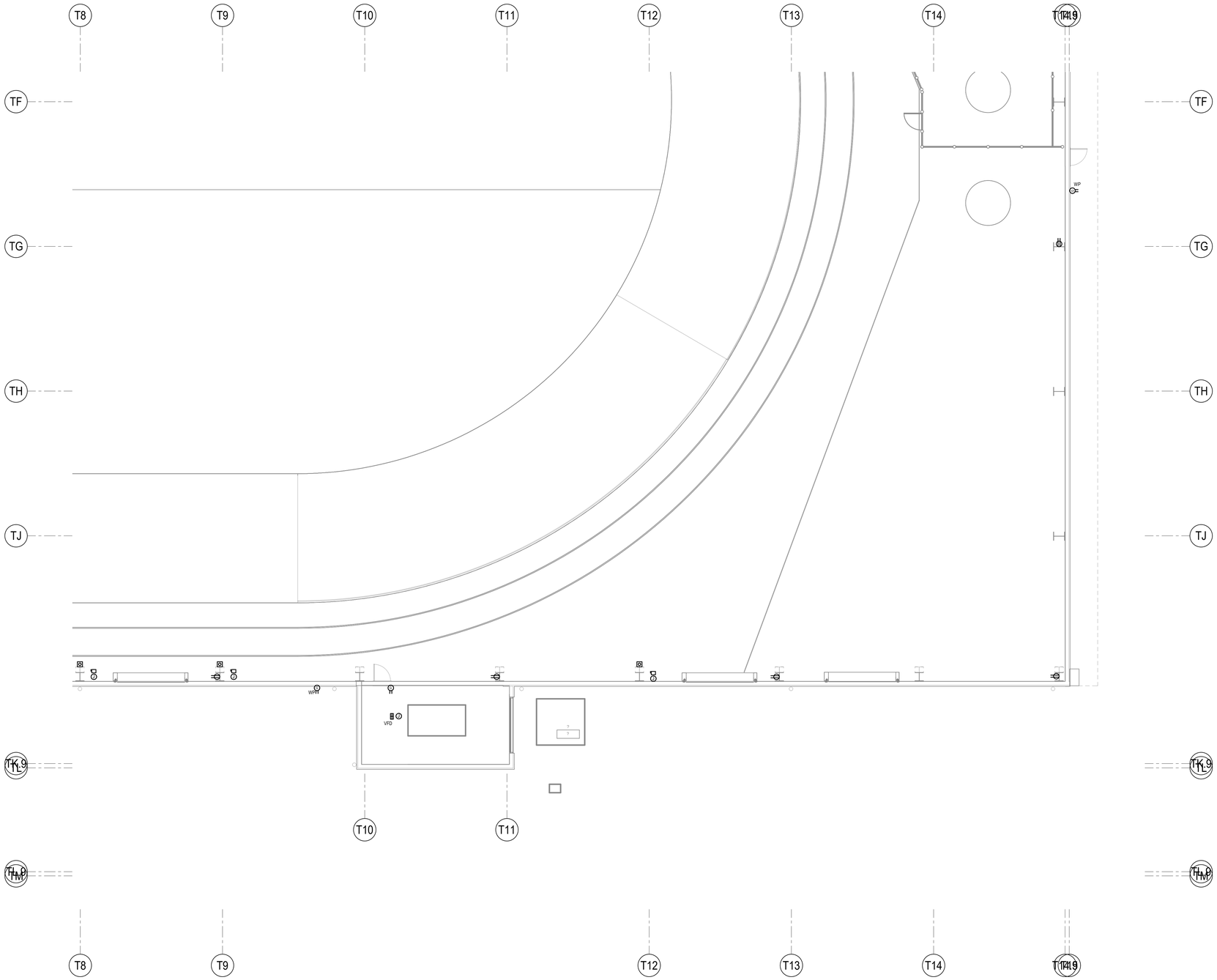

1 **FIRST FLOOR POWER PLAN - AREA B**
1/8" = 1'-0"

JRA architects
3225 Summit Square Place, Suite 200
Lexington, Kentucky 40509
859.252.6781

NOT FOR CONSTRUCTION

RESERVED FOR AHJ STAMP

CMTA

RFP 2 DRAWINGS

UK INDOOR TRACK FACILITY

UNIVERSITY OF KENTUCKY
LEXINGTON, KENTUCKY

ELECTRICAL

PROJECT	202258
DATE	8.31.22

REVISIONS

No.	Description	Date

JRA ARCHITECTS HAS RETAINED AN ELECTRONIC VERSION OF THESE DRAWINGS. THE CLIENT AGREES NOT TO REUSE THESE DRAWINGS - IN ELECTRONIC OR ANY OTHER FORMAT - IN WHOLE, OR IN PART, FOR ANY PURPOSE OTHER THAN FOR THE PROJECT. THE CLIENT AGREES NOT TO TRANSFER THESE ELECTRONIC FILES TO OTHERS WITHOUT THE PRIOR WRITTEN CONSENT OF THE ARCHITECT. THE CLIENT FURTHER AGREES TO WAIVE ALL CLAIMS AGAINST THE ARCHITECT RESULTING IN ANY WAY FROM ANY CHANGES OR ADDITIONS TO OR REUSE OF THE ELECTRONIC FILES FOR ANY OTHER PROJECT BY ANYONE OTHER THAN THE ARCHITECT.

FIRST FLOOR POWER PLAN - AREA B

E-302

COPYRIGHT 2022 - JRA, INC.

C:\Users\samos\Documents\XXTF22 Central File_nolanjamos.rvt
8/31/2022 4:38:00 PM

C:\Users\samos\Documents\XXTF22 Central File_nolanjamos.rvt

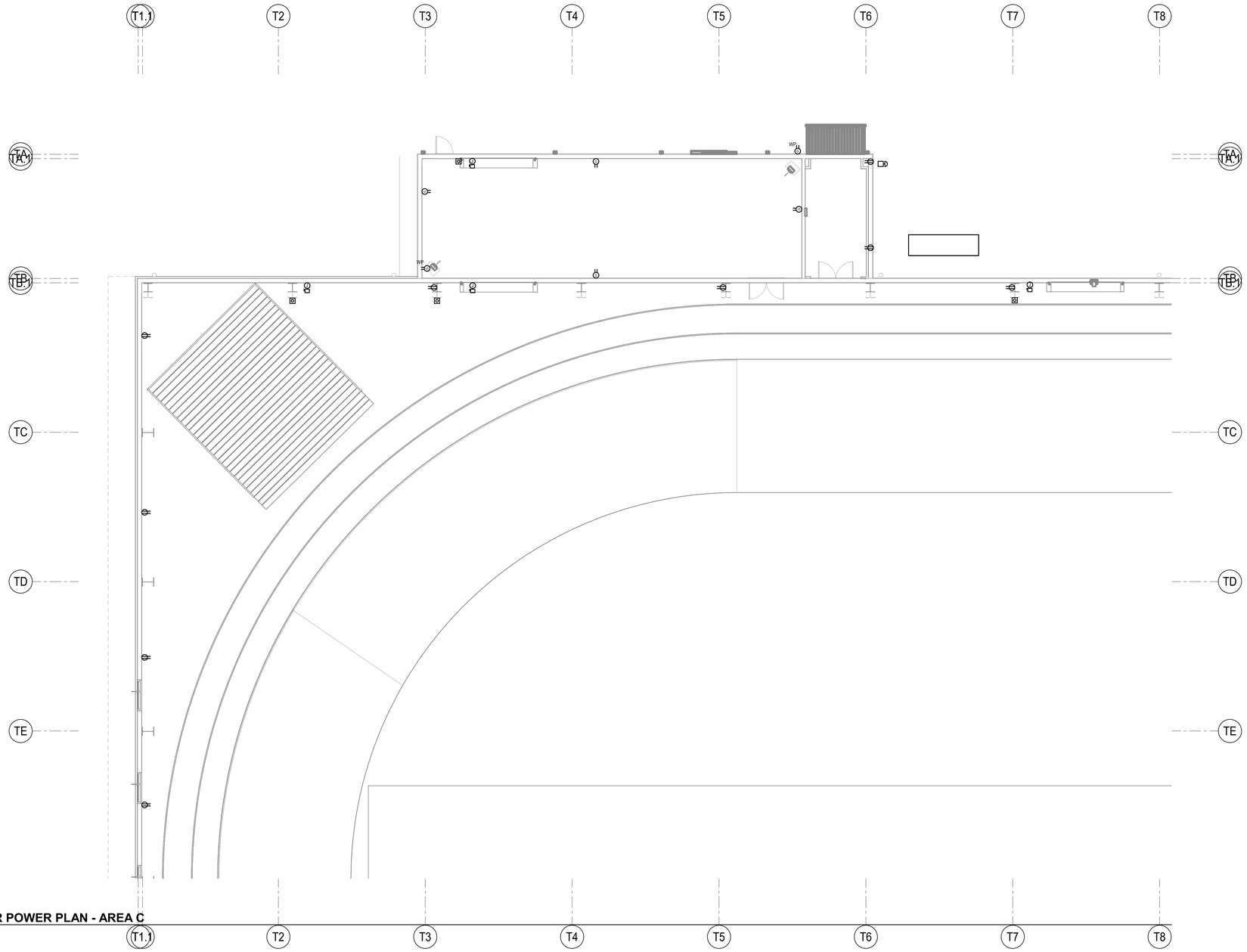

1 **FIRST FLOOR POWER PLAN - AREA C**
1/8" = 1'-0"

8/31/2022 4:38:01 PM

JRA architects
3225 Summit Square Place, Suite 200
Lexington, Kentucky 40509
859.252.6781

NOT FOR CONSTRUCTION

RESERVED FOR AHJ STAMP

CMTA

RFP 2 DRAWINGS

UK INDOOR TRACK FACILITY

UNIVERSITY OF KENTUCKY
LEXINGTON, KENTUCKY

ELECTRICAL

PROJECT	202258
DATE	8.31.22

REVISIONS

No.	Description	Date

JRA ARCHITECTS HAS RETAINED AN ELECTRONIC VERSION OF THESE DRAWINGS. THE CLIENT AGREES NOT TO REUSE THESE DRAWINGS - IN ELECTRONIC OR ANY OTHER FORMAT - IN WHOLE, OR IN PART, FOR ANY PURPOSE OTHER THAN FOR THE PROJECT. THE CLIENT AGREES NOT TO TRANSFER THESE ELECTRONIC FILES TO OTHERS WITHOUT THE PRIOR WRITTEN CONSENT OF THE ARCHITECT. THE CLIENT FURTHER AGREES TO WAIVE ALL CLAIMS AGAINST THE ARCHITECT RESULTING IN ANY WAY FROM ANY CHANGES OR ADDITIONS TO OR REUSE OF THE ELECTRONIC FILES FOR ANY OTHER PROJECT BY ANYONE OTHER THAN THE ARCHITECT.

FIRST FLOOR POWER PLAN - AREA C

E-303

COPYRIGHT 2022 - JRA, INC.

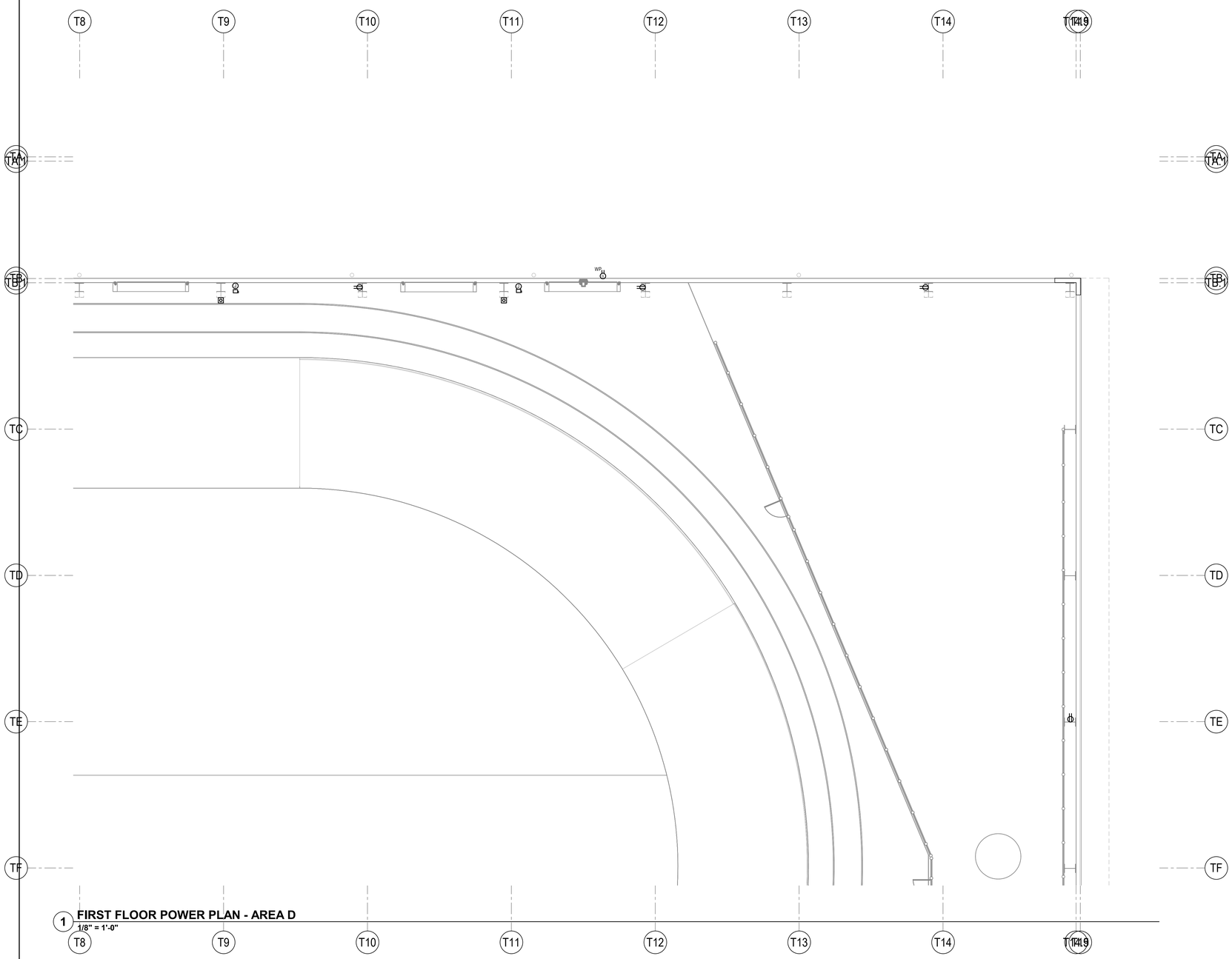

1 **FIRST FLOOR POWER PLAN - AREA D**
1/8" = 1'-0"

C:\Users\samos\Documents\XXTF22 Central File_nolanjamos.rvt

8/31/2022 4:38:02 PM

JRA architects
3225 Summit Square Place, Suite 200
Lexington, Kentucky 40509
859.252.6781

NOT FOR CONSTRUCTION

RESERVED FOR AHJ STAMP

CMTA

RFP 2 DRAWINGS

UK INDOOR TRACK FACILITY
UNIVERSITY OF KENTUCKY
LEXINGTON, KENTUCKY

ELECTRICAL

PROJECT	202258
DATE	8.31.22

REVISIONS

No.	Description	Date

JRA ARCHITECTS HAS RETAINED AN ELECTRONIC VERSION OF THESE DRAWINGS. THE CLIENT AGREES NOT TO REUSE THESE DRAWINGS - IN ELECTRONIC OR ANY OTHER FORMAT - IN WHOLE, OR IN PART, FOR ANY PURPOSE OTHER THAN FOR THE PROJECT. THE CLIENT AGREES NOT TO TRANSFER THESE ELECTRONIC FILES TO OTHERS WITHOUT THE PRIOR WRITTEN CONSENT OF THE ARCHITECT. THE CLIENT AGREES TO WAIVE ALL CLAIMS AGAINST THE ARCHITECT RESULTING IN ANY WAY FROM ANY UNAUTHORIZED CHANGES TO OR REUSE OF THE ELECTRONIC FILES FOR ANY OTHER PROJECT BY ANYONE OTHER THAN THE ARCHITECT.

FIRST FLOOR POWER PLAN - AREA D

E-304

COPYRIGHT 2022 - JRA, INC.

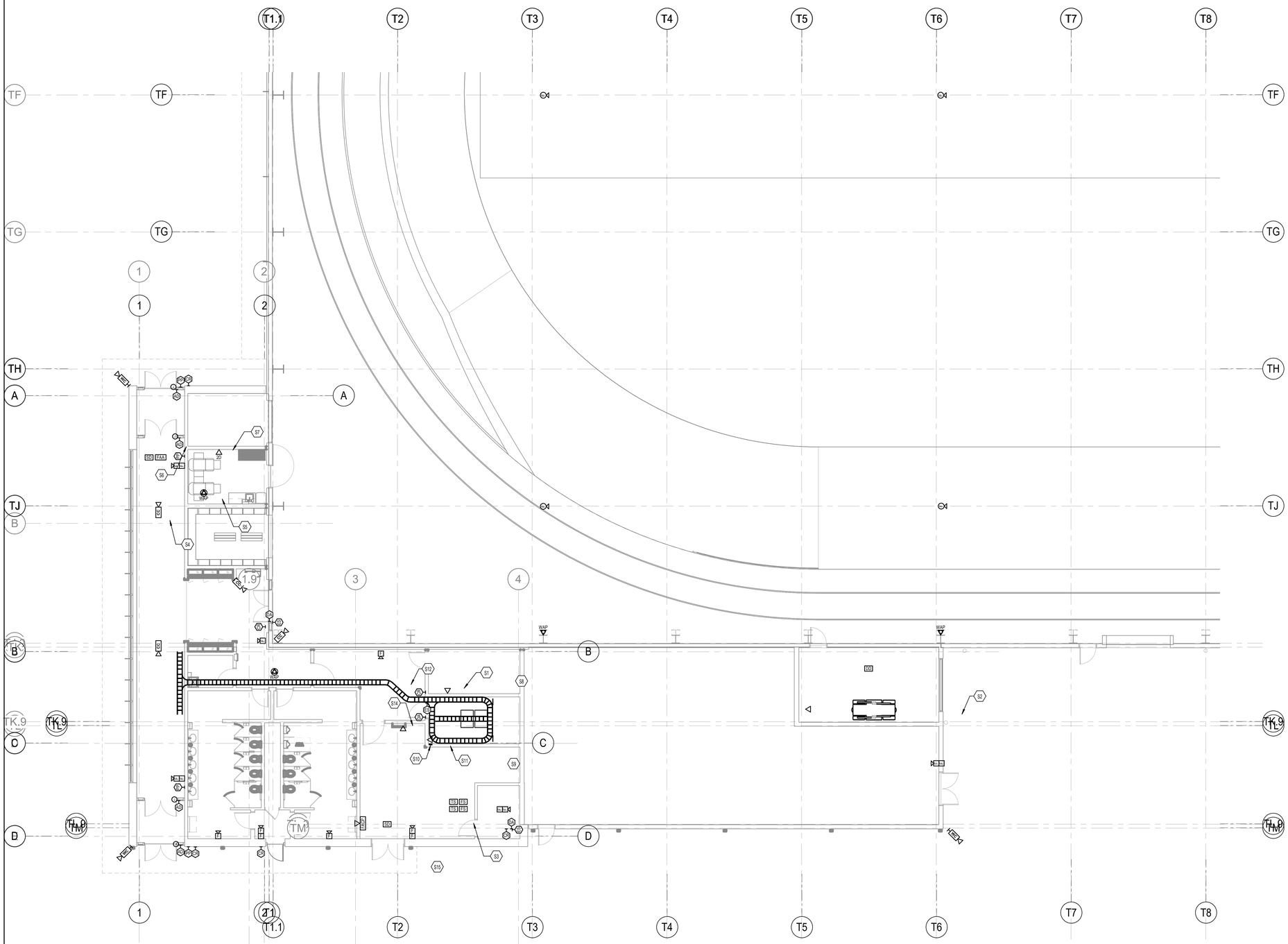

1 FIRST FLOOR SYSTEMS PLAN - AREA A
1/8" = 1'-0"

C:\Users\samos\Documents\XXTF22 Central File_nolanjamos.rvt

8/31/2022 4:38:04 PM

JRA architects
3225 Summit Square Place, Suite 200
Lexington, Kentucky 40509
859.252.6781

NOT FOR CONSTRUCTION

RESERVED FOR AHJ STAMP

CMTA

RFP 2 DRAWINGS

UK INDOOR TRACK FACILITY

UNIVERSITY OF KENTUCKY
LEXINGTON, KENTUCKY

ELECTRICAL

PROJECT	202258
DATE	8.31.22

REVISIONS

No.	Description	Date

JRA ARCHITECTS HAS RETAINED AN ELECTRONIC VERSION OF THESE DRAWINGS. THE CLIENT AGREES NOT TO REUSE THESE DRAWINGS - IN ELECTRONIC OR ANY OTHER FORMAT - IN WHOLE, OR IN PART, FOR ANY PURPOSE OTHER THAN FOR THE PROJECT. THE CLIENT AGREES NOT TO TRANSFER THESE ELECTRONIC FILES TO OTHERS WITHOUT THE PRIOR WRITTEN CONSENT OF THE ARCHITECT. THE CLIENT FURTHER AGREES TO WAIVE ALL CLAIMS AGAINST THE ARCHITECT RESULTING IN ANY WAY FROM ANY UNAUTHORIZED CHANGES TO OR REUSE OF THE ELECTRONIC FILES FOR ANY OTHER PROJECT BY ANYONE OTHER THAN THE ARCHITECT.

FIRST FLOOR SYSTEMS PLAN - AREA A

E-401

COPYRIGHT 2022 - JRA, INC.

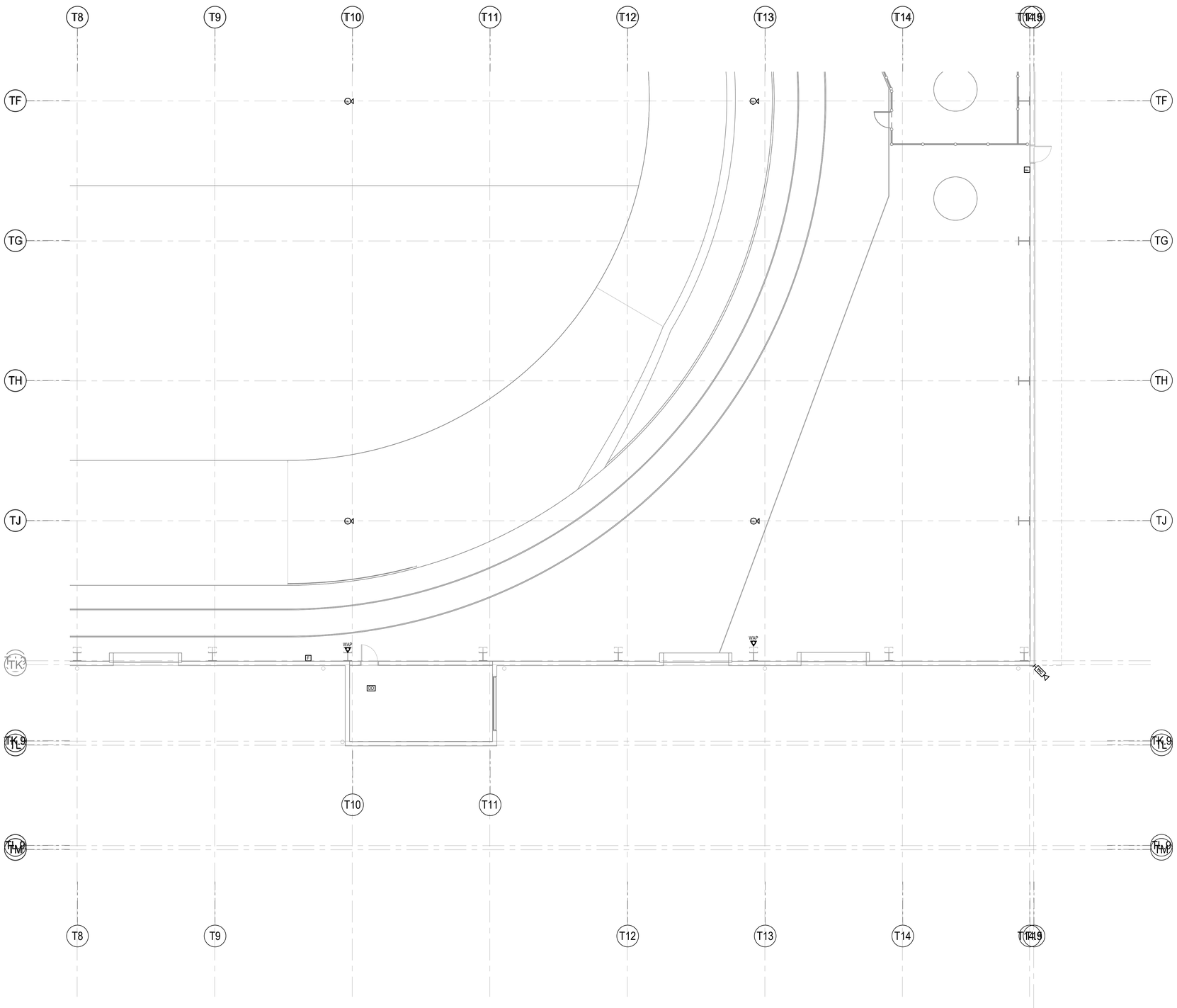

1 **FIRST FLOOR SYSTEMS PLAN - AREA B**
1/8" = 1'-0"

C:\Users\samos\Documents\XXTF22 Central File_nolanjamos.rvt

8/31/2022 4:38:04 PM

JRA architects
3225 Summit Square Place, Suite 200
Lexington, Kentucky 40509
859.252.6781

NOT FOR CONSTRUCTION

RESERVED FOR AHJ STAMP

CMTA

RFP 2 DRAWINGS

UK INDOOR TRACK FACILITY
UNIVERSITY OF KENTUCKY
LEXINGTON, KENTUCKY

ELECTRICAL

PROJECT	202258
DATE	8.31.22

REVISIONS

No.	Description	Date

JRA ARCHITECTS HAS RETAINED AN ELECTRONIC VERSION OF THESE DRAWINGS. THE CLIENT AGREES NOT TO REUSE THESE DRAWINGS - IN ELECTRONIC OR ANY OTHER FORMAT - IN WHOLE, OR IN PART, FOR ANY PURPOSE OTHER THAN FOR THE PROJECT. THE CLIENT AGREES NOT TO TRANSFER THESE ELECTRONIC FILES TO ANY OTHER PARTY WITHOUT THE WRITTEN CONSENT OF THE ARCHITECT. THE CLIENT FURTHER AGREES TO WAIVE ALL CLAIMS AGAINST THE ARCHITECT RESULTING IN ANY WAY FROM ANY UNAUTHORIZED CHANGES TO OR REUSE OF THE ELECTRONIC FILES FOR ANY OTHER PROJECT BY ANYONE OTHER THAN THE ARCHITECT.

FIRST FLOOR SYSTEMS PLAN - AREA B

E-402

COPYRIGHT 2022 - JRA, INC.

C:\Users\samos\Documents\XXTF22 Central File_nolanjamos.rvt

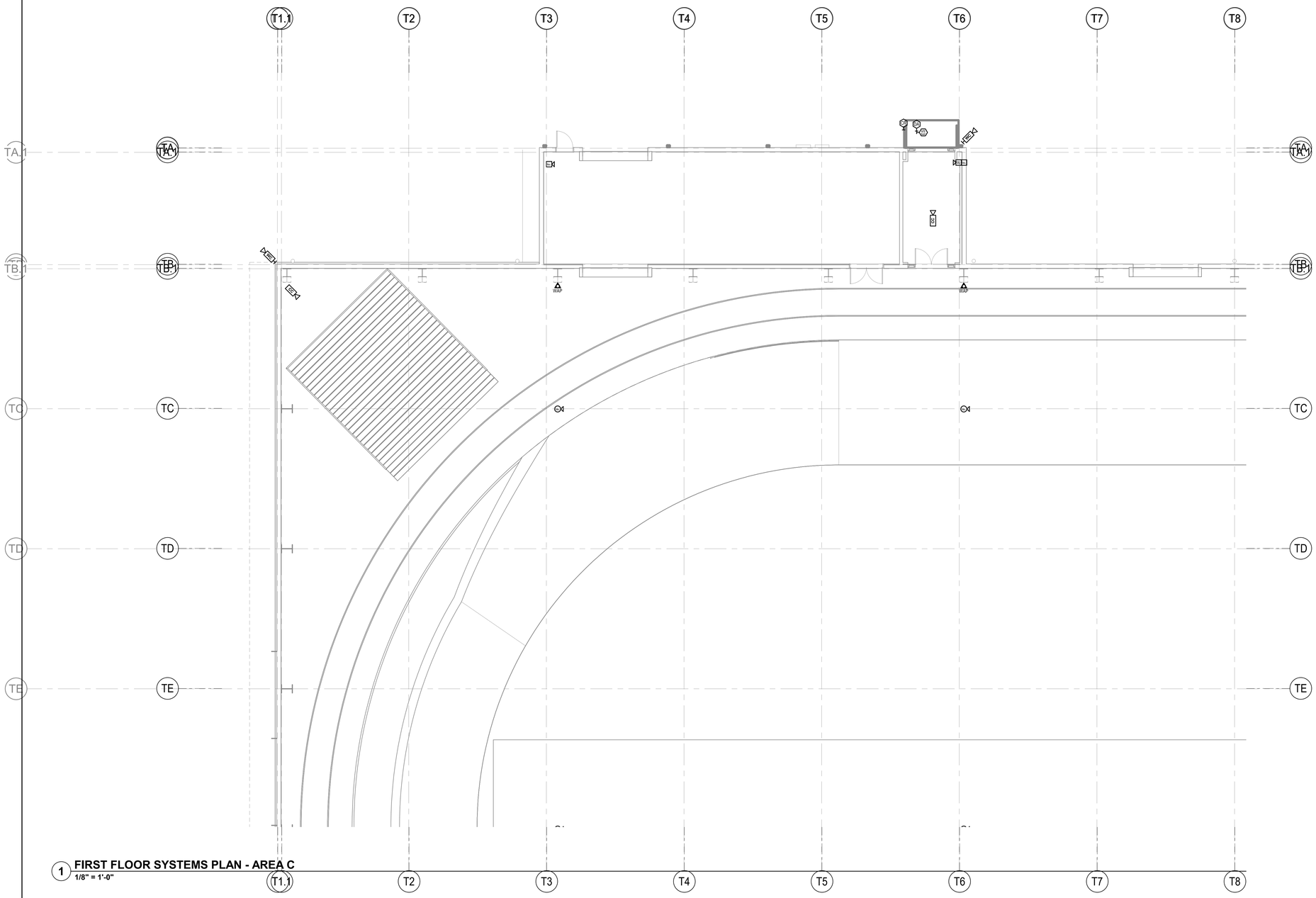

1 **FIRST FLOOR SYSTEMS PLAN - AREA C**
1/8" = 1'-0"

8/31/2022 4:38:05 PM

JRA architects
3225 Summit Square Place, Suite 200
Lexington, Kentucky 40509
859.252.6781

NOT FOR CONSTRUCTION

RESERVED FOR AHJ STAMP

CMTA

RFP 2 DRAWINGS

UK INDOOR TRACK FACILITY

UNIVERSITY OF KENTUCKY
LEXINGTON, KENTUCKY

ELECTRICAL

PROJECT	202258
DATE	8.31.22

REVISIONS

No.	Description	Date

JRA ARCHITECTS HAS RETAINED AN ELECTRONIC VERSION OF THESE DRAWINGS. THE CLIENT AGREES NOT TO REUSE THESE DRAWINGS - IN ELECTRONIC OR ANY OTHER FORMAT - IN WHOLE, OR IN PART, FOR ANY PURPOSE OTHER THAN FOR THE PROJECT. THE CLIENT AGREES NOT TO TRANSFER THESE ELECTRONIC FILES TO OTHERS WITHOUT THE PRIOR WRITTEN CONSENT OF THE ARCHITECT. THE CLIENT FURTHER AGREES TO WAIVE ALL CLAIMS AGAINST THE ARCHITECT RESULTING IN ANY WAY FROM ANY CHANGES OR ADDITIONS TO OR REUSE OF THE ELECTRONIC FILES FOR ANY OTHER PROJECT BY ANYONE OTHER THAN THE ARCHITECT.

FIRST FLOOR SYSTEMS PLAN - AREA C

E-403

COPYRIGHT 2022 - JRA, INC.

C:\Users\samoa\Documents\XXTF22 Central File_nolanjamos.rvt

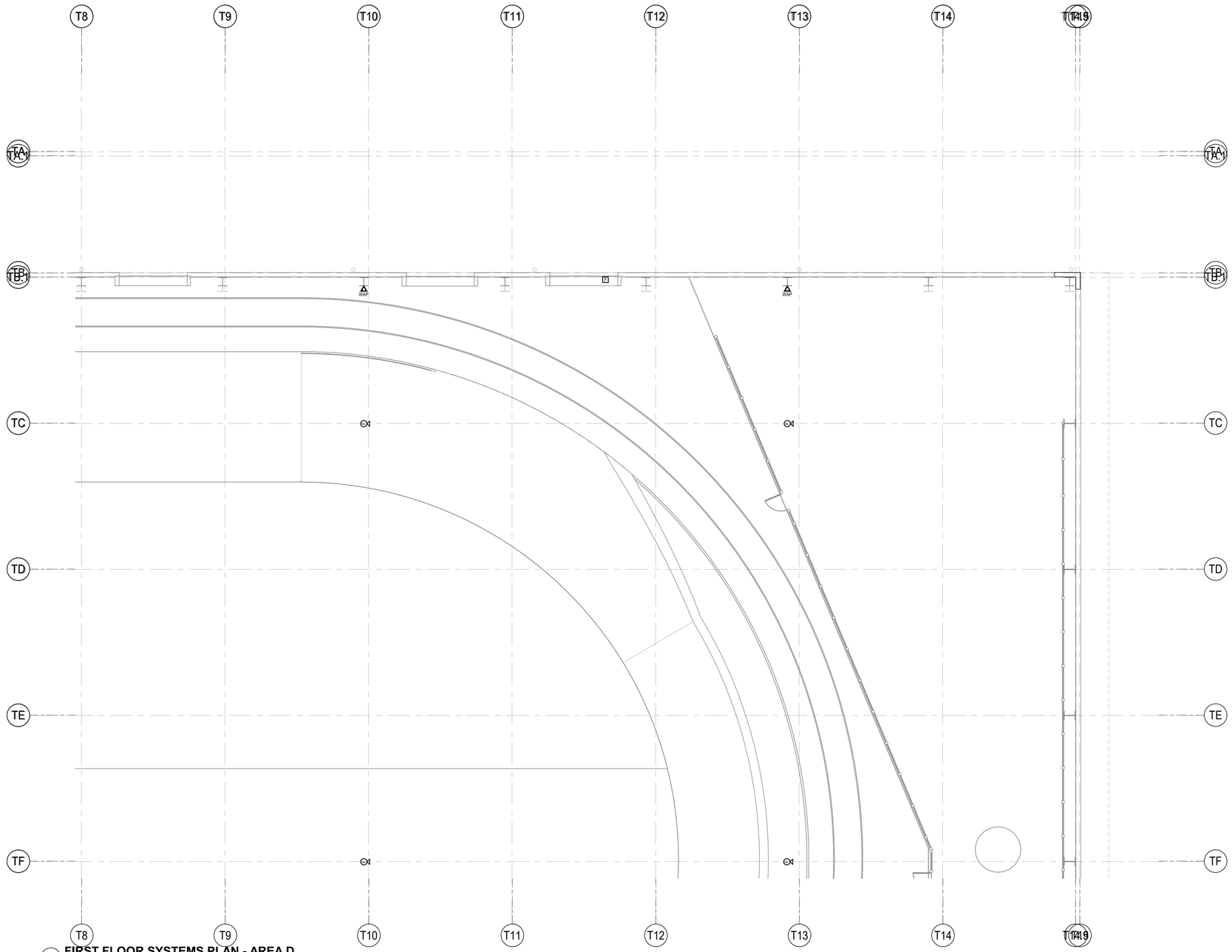

1 **FIRST FLOOR SYSTEMS PLAN - AREA D**
1/8" = 1'-0"

8/31/2022 4:38:06 PM

JRA architects
3225 Summit Square Place, Suite 200
Lexington, Kentucky 40509
859.252.6781

NOT FOR CONSTRUCTION

RESERVED FOR AHJ STAMP

CMTA

RFP 2 DRAWINGS

UK INDOOR TRACK FACILITY

UNIVERSITY OF KENTUCKY
LEXINGTON, KENTUCKY

ELECTRICAL

PROJECT	202258
DATE	8.31.22

REVISIONS

No.	Description	Date

JRA ARCHITECTS HAS RETAINED AN ELECTRONIC VERSION OF THESE DRAWINGS. THE CLIENT AGREES NOT TO REUSE THESE DRAWINGS - IN ELECTRONIC OR ANY OTHER FORMAT - IN WHOLE, OR IN PART, FOR ANY PURPOSE OTHER THAN FOR THE PROJECT. THE CLIENT AGREES NOT TO TRANSFER THESE ELECTRONIC FILES TO OTHERS WITHOUT THE PRIOR WRITTEN CONSENT OF THE ARCHITECT. THE CLIENT AGREES TO WAIVE ALL CLAIMS AGAINST THE ARCHITECT RESULTING IN ANY WAY FROM ANY UNAUTHORIZED CHANGES TO OR REUSE OF THE ELECTRONIC FILES FOR ANY OTHER PROJECT BY ANYONE OTHER THAN THE ARCHITECT.

FIRST FLOOR SYSTEMS PLAN - AREA D

E-404

COPYRIGHT 2022 - JRA, INC.

C:\Users\samos\Documents\XXTF22 Central File_nolanjamos.rvt

ONE-LINE XFMR SECONDARY FEEDER SCHEDULE (COPPER)				
TAG	OCPD SETTING	WIRE SIZE	EQUIP. GROUND SIZE	CONDUIT SIZE

ONE-LINE FEEDER SCHEDULE (COPPER)				
NOTES: • TAGS WITH SUFFIX "-3W" ARE THREE-WIRE, NO NEUTRAL.				
TAG	OCPD SETTING	WIRE SIZE	EQUIP. GROUND SIZE	CONDUIT SIZE
100	90/3 OR 100/3 (4W)	(4) #3	(1) #8	1-1/4"
150	150/3 (4W)	(4) #1/0	(1) #6	2"
400	400/3 (4W)	(4) #500 KCMIL	(1) #3	3-1/2"
1200	1200/3 (4W)	4 RUNS OF (4) - #350 KCMIL/PHASE	(1) #3/0	3-1/2"

ELECTRICAL ONE-LINE GENERAL NOTES	
A	COORDINATE ALL REQUIREMENTS WITH UTILITY PRIOR TO START OF WORK. CONTRACTOR IS RESPONSIBLE FOR COMPLYING WITH ALL UK PPD OR UTILITY CONSTRUCTION REQUIREMENTS.
B	THE EXACT BREAKER SIZES SHALL BE COORDINATED WITH THE MECHANICAL SHOP DRAWINGS BEFORE PURCHASING AND INSTALLING BREAKERS FOR THE HVAC AND PLUMBING MECHANICAL EQUIPMENT.
C	AS PART OF THIS CONTRACT PROVIDE A COORDINATION/FAULT CURRENT STUDY FOR BREAKERS ON THIS PROJECT. STUDY SHALL INCLUDE ALL MAINS AND FEEDERS SHOWN ON THIS DRAWING AND SHALL EXTEND TO THE MAIN LUGS OR BREAKER THE FURTHEST DEVICE DOWNSTREAM. SUBMIT AS SHOP DRAWING TO ENGINEER PRIOR TO ORDERING ANY POWER DISTRIBUTION EQUIPMENT.
D	INCLUDE RECOMMENDED SETTINGS FOR ALL ELECTRONIC ADJUSTABLE BREAKERS.

ONE-LINE NEW WORK TAGGED NOTES

1. PROVIDE ELECTRONIC TRIP WITH ADJUSTABLE SETTINGS.
2. CONTRACTOR TO PROVIDE SQUARE-D PM800 DIGITAL METER WITH BACNET COMPATIBILITY. PROVIDE NETWORK CONNECTION AND INTERFACE METER TO DELTA ROOM FOR MONITORING.
3. NEW SECONDARY CONDUIT IN CONCRETE ENCASEMENT.
4. DUCT TO BE CONCRETE ENCASED.

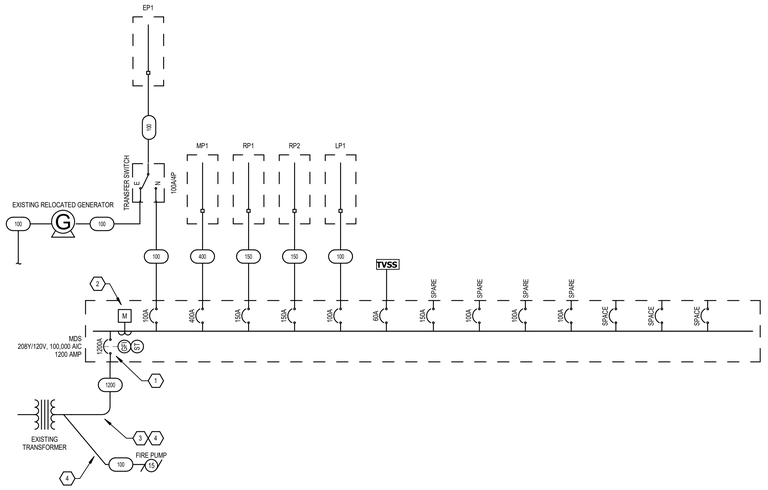

1 **ONE-LINE DIAGRAM**
SCALE: NO SCALE

JRA architects
3225 Summit Square Place, Suite 200
Lexington, Kentucky 40509
859.252.6781

NOT FOR CONSTRUCTION

RESERVED FOR AHJ STAMP

CMTA

RFP 2 DRAWINGS

UK INDOOR TRACK FACILITY
UNIVERSITY OF KENTUCKY
LEXINGTON, KENTUCKY

ELECTRICAL

PROJECT	202258
DATE	8.31.22

REVISIONS

No.	Description	Date

JRA ARCHITECTS HAS RETAINED AN ELECTRONIC VERSION OF THESE DRAWINGS. THE CLIENT AGREES NOT TO REUSE THESE DRAWINGS - IN ELECTRONIC OR ANY OTHER FORMAT - IN WHOLE, OR IN PART, FOR ANY PURPOSE OTHER THAN FOR THE PROJECT. THE CLIENT AGREES NOT TO TRANSFER THESE ELECTRONIC FILES TO ANYONE OTHER THAN THE CLIENT WITHOUT CONSENT OF THE ARCHITECT. THE CLIENT FURTHER AGREES TO WAIVE ALL CLAIMS AGAINST THE ARCHITECT RESULTING IN ANY WAY FROM ANY UNAUTHORIZED CHANGES TO OR REUSE OF THE ELECTRONIC FILES FOR ANY OTHER PROJECT BY ANYONE OTHER THAN THE ARCHITECT.

ONE-LINE DIAGRAM

E-501

COPYRIGHT 2022 - JRA, INC.

8/31/2022 4:38:08 PM

ELEC - LUMINAIRE SCHEDULE

REMARKS:
1. FIXTURE AND DRIVER COMBINATION TO HAVE FIVE YEAR WARRANTY FROM THE FIXTURE MANUFACTURER. FURNISH WITH WARRANTY CERTIFICATES.
2. FIXTURE TO BE CIRCUITED TO NEAREST UNSWITCHED EMERGENCY POWER CIRCUIT.
* ALL FIXTURESWITH "E" SUFFIX ON FLOOR PLANS OR SCHEDULE ARE EMERGENCY CIRCUIT FIXTURES. EMERGENCY RELAYS ARE TO BE CONNECTED TO UNSWITCHED HOT TO MONITOR NORMAL POWER.

TYPE	DESCRIPTION	BASIS OF DESIGN	EQUALS	LAMPS / CCT	DRIVER	MOUNTING	VOLTAGE	REMARKS
A	COLOR CHANGING RGB EXTERIOR RATED COVE LIGHT. DEFAULT UK BLUE SETTING. HIGH OUTPUT 50 X 10 DEGREE DISTRIBUTION. FULL ON.	TRAXON HO-36-RGB-50X10	COOPER, COLUMBIA	RGB	DIMMING/COLOR CHANGING		MVOLT	1
B	COLOR CHANGING RGB PENDANT. 23 WATTS AND 1228 LUMENS EACH.	USAI RGBW CBRC12-33C3-30KS-45-S-WH MOD TO INIFINITE COLOR+	COOPER, COLUMBIA	RGB	DIMMING/COLOR CHANGING		MVOLT	1
C	EXTERIOR WALL WASH ADJUSTABLE LED. 12" LENGTH WITH 6 WATTS PER LINEAR FOOT.	ECOSENSE TROV L50-E-12-6-WHITE-80-MULT-25X33	COOPER, COLUMBIA	LED (ELECTRONIC DIMMING)	DIMMING	SURFACE (ROOF)	MVOLT	1
F1	4' LED UTILITY STRIP LIGHT - 5,000 LUMEN, 4,000K	LITHONIA ZL1N-L48-5000LM-FST-MVOLT-40K-80CRI-WH	COOPER, COLUMBIA	4000K LED	ECO LED	CHAIN OR SURFACE	MVOLT	1
F1B	8' LED UTILITY STRIP LIGHT - 10,000 LUMEN, 4,000K	LITHONIA TZL1N-L96-10000LM-FST-MVOLT-40K-80CRI-WH	COOPER, COLUMBIA	4000K LED	ECO LED	CHAIN OR SURFACE	MVOLT	1
F1BE	8' LED UTILITY STRIP LIGHT - 10,000 LUMEN, 4,000K	LITHONIA TZL1N-L96-10000LM-FST-MVOLT-40K-80CRI-WH	COOPER, COLUMBIA	4000K LED	ECO LED	CHAIN OR SURFACE	MVOLT	1
F1E	4' LED UTILITY STRIP LIGHT - 5,000 LUMEN, 4,000K	LITHONIA ZL1N-L48-5000LM-FST-MVOLT-40K-80CRI-WH	COOPER, COLUMBIA	4000K LED	ECO LED	CHAIN OR SURFACE	MVOLT	1
F2	2X4 VOLUMETRIC LED TROFFER - 4,800 LUMEN, 4,000K	LITHONIA ENVEX-2X4-HRG-4800LM-80CRI-40K-MIN10-EZT-MVOLT	COOPER, COLUMBIA	4000K LED	ECO LED	RECESS	MVOLT	1
F2E	2X4 VOLUMETRIC LED TROFFER - 4,800 LUMEN, 4,000K	LITHONIA ENVEX-2X4-HRG-4800LM-80CRI-40K-MIN10-EZT-MVOLT	COOPER, COLUMBIA	4000K LED	ECO LED	RECESS	MVOLT	1
F3	2X2 VOLUMETRIC LED TROFFER - 4,000 LUMEN, 4,000K	LITHONIA ENVEX-2X2-HGR-4000LM-80CRI-40K-MIN10-EZT-MVOLT	COOPER, COLUMBIA	4000K LED	ECO LED	RECESS	MVOLT	1
F3E	2X2 VOLUMETRIC LED TROFFER - 4,000 LUMEN, 4,000K	LITHONIA ENVEX-2X2-HGR-4000LM-80CRI-40K-MIN10-EZT-MVOLT	COOPER, COLUMBIA	4000K LED	ECO LED	RECESS	MVOLT	1
F4	6" RECESSED CAN - 3000 LUMEN, 4,000K. DECORATIVE	GOTHAM EVO6-40-30-AR-ND-LSS-MVOLT-EZ10-90CRI	COOPER, COLUMBIA	4000K LED	ECO LED	RECESS	MVOLT	1
F4B	6" RECESSED CAN - 3000 LUMEN, 4,000K. DECORATIVE RING TRIM	GOTHAM EVO6DLR-40-30-AR-LSS-MVOLT-EZ10-90CRI	COOPER, COLUMBIA	4000K LED	ECO LED	RECESS	MVOLT	1
F4BE	6" RECESSED CAN - 3000 LUMEN, 4,000K. DECORATIVE RING TRIMD CAN LIGHT FIXTURE	GOTHAM EVO6-40-30-AR-ND-LSS-MVOLT-EZ10-90CRI	COOPER, COLUMBIA	4000K LED	ECO LED	RECESS	MVOLT	1
F4E	6" RECESSED CAN - 3000 LUMEN, 4,000K. DECORATIVE	GOTHAM EVO6-40-30-AR-ND-LSS-MVOLT-EZ10-90CRI	COOPER, COLUMBIA	4000K LED	ECO LED	RECESS	MVOLT	1
F5	RECESSED 4' LINEAR - 4000K, 800 LUMEN PER FOOT.	MARK LIGHTIING SL4L-LOP-4-FLP-FL-80CRI-40K-800LMF-NODIM-MVOLT	COOPER, COLUMBIA	4000K LED	ECO LED	RECESS	MVOLT	1
F6A	RECESSED COVE LED - 4,000K, LENGTH TO MATCH CORRIDOR. PROVIDE EMERGENCY WHERE INDICATED.	PRUDENTIAL LIGHTING BIO-PSTD-FLUSH-SO-RX-TMW-AWL-D1R-WTW-SC-X1M-DM10	COOPER, COLUMBIA	4000K LED	ECO LED	RECESS-COVE	MVOLT	1
F6B	RECESSED COVE LED - 4,000K, LENGTH TO MATCH CORRIDOR. PROVIDE EMERGENCY WHERE INDICATED.	PRUDENTIAL LIGHTING BIO-PSTD-FLUSH-SO-RX-TMW-AWL-D1R-WTW-SC-X1M-DM10	COOPER, COLUMBIA	4000K LED	ECO LED	RECESS-COVE		1
L1	LED HIGH BAY, 48". 72,000 LUMEN OUTPUT WITH HIGH EFFICIENCY PERFORMANCE PACKAGE. ACRYLIC FROSTED LENS. GENERAL DISTRIBUTION WITH MULTI-VOLT 0-10 VOLT DIMMING DRIVER. 4,000K AND 80 CRI.	LITHONIA IBG-7200LM-HEF-AFL-GND-MVOLT-GZ10-40K-80CRI	COOPER, COLUMBIA	4000K LED	PREMIUM LED	SUSPENDED	MVOLT	1
L1E	LED HIGH BAY, 48". 72,000 LUMEN OUTPUT WITH HIGH EFFICIENCY PERFORMANCE PACKAGE. ACRYLIC FROSTED LENS. GENERAL DISTRIBUTION WITH MULTI-VOLT 0-10 VOLT DIMMING DRIVER. 4,000K AND 80 CRI.	LITHONIA IBG-7200LM-HEF-AFL-GND-MVOLT-GZ10-40K-80CRI	COOPER, COLUMBIA	4000K LED	PREMIUM LED	SUSPENDED	MVOLT	1
W1	OUTDOOR PEDESTRIAN LIGHT. DECORATIVE POST TOP, DECORATIVE 14' FLUTED POLE. FIXTURE TO BE PER UK CAMPUS STANDARDS.	HOLOPHANE RPE-100-4K-AS-G3-B, CH-A-14-F4C-12-P07-ABG-BK	COOPER, COLUMBIA, DAYBRITE	LED	LED DRIVER (SEE SPECIFICATIONS)	SURFACE (ROOF)	MVOLT	1
W2E	OUTDOOR WALL MOUNTED SCONCE FIXTURE. CAST ALUMINUM, CORROSION RESISTANT HOUSING. EXTERIOR PARTS ARE POWDER COAT FINISH. MVOLT DRIVER RATED FOR -30 TO 40 DEGREE C. HIGH PERFORMANCE LED RATED FOR MINIMUM OF 100,000 HOURS. PROVIDE ALL MOUNTING HARDWARE FOR SURFACE APPLICATION. WET LOCATION RATED. 5-YEAR WARRANTY. 2,029 LUMEN AT 4,000K. FINISH TO BE SELECTED BY ARCHITECT WITH FULL CATALOG OF OPTIONS TO CHOSE FROM. EMERGENCY BATTERY PACK RATED AT 1,400 LUMENS.	LITHONIA WSQLED-1-10A700/40K-SR3-MVOLT-DMG-ELCW	COOPER, COLUMBIA, DAYBRITE	LED (24 WATT)	LED	WALL(SURFACE)	MVOLT	1
X1	EDGE LIT EXIT LIGHT. HIGH POLISH, INJECTION MOLDED ACRYLIC PANEL. BRUSHED ALUMINUM HOUSING. LED LAMPS AND LOW ENERGY CONSUMPION AT 2.3 WATTS (MAXIMUM). CONTRACTOR TO PROVIDE MOUNTING HARDWARE INCLUDING STEMS T-BAR HANGERS, AND ROUGH-IN RECESSED BOXES. CONTRACTOR TO PROVIDE WALL, CEILING, END, OR STEM MOUNT BASED ON EACH APPLICATION. PROVIDE DUAL FACE MIRROR IN ANY APPLICATION WHERE SIGNAGE MAY BE READABLE FROM BOTH SIDES. LETTERS TO BE RED.	LITHONIA EDG/EDGR-1-R-SD	COOPER, COLUMBIA	RED LED		SURFACE OR RECESSED	MVOLT	1,2

JRA architects
3225 Summit Square Place, Suite 200
Lexington, Kentucky 40509
859.252.6781

NOT FOR CONSTRUCTION

RESERVED FOR AHJ STAMP

CMTA

RFP 2 DRAWINGS

UK INDOOR TRACK FACILITY

UNIVERSITY OF KENTUCKY
LEXINGTON, KENTUCKY

ELECTRICAL

PROJECT	202258
DATE	8.31.22

REVISIONS

No.	Description	Date

JRA ARCHITECTS HAS RETAINED AN ELECTRONIC VERSION OF THESE DRAWINGS. THE CLIENT AGREES NOT TO REUSE THESE DRAWINGS - IN ELECTRONIC OR ANY OTHER FORMAT - IN WHOLE, OR IN PART, FOR ANY PURPOSE OTHER THAN FOR THE PROJECT. THE CLIENT AGREES NOT TO TRANSFER THESE ELECTRONIC FILES TO OTHERS WITHOUT THE PRIOR WRITTEN CONSENT OF THE ARCHITECT. THE CLIENT FURTHER AGREES TO WAIVE ALL CLAIMS AGAINST THE ARCHITECT RESULTING IN ANY WAY FROM ANY UNAUTHORIZED CHANGES TO OR REUSE OF THE ELECTRONIC FILES FOR ANY OTHER PROJECT BY ANYONE OTHER THAN THE ARCHITECT.

LIGHT FIXTURE SCHEDULE

E-601

COPYRIGHT 2022 - JRA, INC.

C:\Users\samoa\Documents\XXTF22 Central File_solanijamoa.rvt
8/31/2022 4:38:08 PM

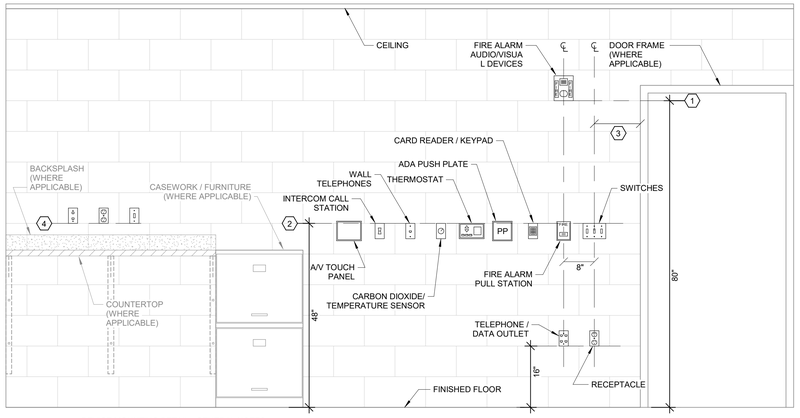

DEVICE MOUNTING DETAIL - GENERAL NOTES:

A. WHERE DEVICES OF ANY DISCIPLINE ARE LOCATED IN THE SAME GENERAL AREA ON THE PLANS AND ARE SHOWN TO BE MOUNTED AT A SIMILAR HEIGHT, ALIGN HORIZONTALLY ALONG TOP OF DEVICE BACKBOX (AS SHOWN IN DETAIL AND DESCRIBED IN KEY NOTE #2).

B. WHERE DEVICES OF ANY DISCIPLINE ARE LOCATED IN THE SAME GENERAL AREA ON THE PLANS AND ARE SHOWN MOUNTED AT DIFFERENT HEIGHTS, ALIGN VERTICALLY ALONG THE CENTERLINE OF THE DEVICE BACKBOX (AS SHOWN IN DETAIL).

C. FOR ANY WALL OTHER THAN PAINTED GYPSUM BOARD OR CMU, DEVICE LOCATIONS MUST BE FIELD APPROVED BY ENGINEER OR ARCHITECT PRIOR TO INSTALLATION OF FINISHES.

DEVICE MOUNTING DETAIL - KEY NOTES:

1. MOUNT VISUAL NOTIFICATION APPLIANCES SO THAT ENTIRE LENS IS BETWEEN 80" AND 96" AFF. IF CEILING IS TOO LOW FOR DEVICE TO BE MOUNTED ABOVE 80", MOUNT SO THAT THE LENS IS WITHIN 6" OF FINISHED CEILING.

2. ALIGN BACKBOXES OF DEVICES AT THE MOUNTING HEIGHT INDICATED. MEASURE TO THE TOP OF THE BACKBOX FOR STANDARD OUTLET BOXES. NON-STANDARD BACKBOXES ARE TO BE INSTALLED SUCH THAT THE FINISHED DEVICES ARE ALIGNED ALONG THEIR RESPECTIVE CENTERLINES.

3. MOUNTING HEIGHTS SHOWN ILLUSTRATE DESIGN INTENT AND ARE TO BE FOLLOWED UNLESS CONTRADICTED BY APPLICABLE CODE. WHERE DEVICES ARE SHOWN ADJACENT TO DOOR FRAMES ON PLANS INSTALL 12" FROM FRAME TO AVOID SLUSHED SECTIONS OR BRACING. SPECIFIC DEVICES ARE SHOWN IN RELATIVE ORDER FROM DOOR FRAME; WHERE THESE DEVICES ARE NOT PRESENT AT A PARTICULAR LOCATION, ADJUST LOCATIONS CLOSER TO DOOR ACCORDINGLY.

4. THE CONTRACTOR IS TO COORDINATE ALL ROUGH-INS WITH ANY COUNTERTOPS/BACKSPLASHES TO AVOID CONFLICT. ALIGN DEVICE BACKBOXES IN THE BOTTOM OF THE NEXT FULL BLOCK ABOVE THE BACKSPLASH AS SHOWN. FOR NON-BLOCK WALLS ALIGN BOTTOM OF DEVICE BACKBOXES 4" ABOVE BACKSPLASH. COORDINATE WORK WITH CASEWORK AND KITCHEN SHOP DRAWINGS ACCORDINGLY. IF CONFLICT STILL ARISES CONTACT THE ENGINEER FOR DIRECTION ON HOW TO PROCEED.

GROUNDING CONDUCTOR SCHEDULE

1. #4/0 INSULATED COPPER CONDUCTOR WITH GREEN IDENTIFICATION MARKING AND CONNECTION INFORMATION LABEL ON EACH END.
2. 500 KCMIL INSULATED COPPER CONDUCTOR WITH GREEN INDENTIFICATION MARKING AND CONNECTION INFORMATION LABEL ON EACH END.
3. #2 INSULATED COPPER CONDUCTOR WITH GREEN INDENTIFICATION MARKING AND CONNECTION INFORMATION LABEL ON EACH END.

GROUNDING GENERAL NOTES:

A. BONDS TO EQUIPMENT AND ENCLOSURES NOTED IN THIS DIAGRAM ARE REPRESENTATIVE ONLY. COORDINATE ALL CONNECTIONS TO GROUNDING SYSTEM WITH PLANS AND CODE REQUIREMENTS.
B. BOND ALL SEPARATELY DERIVED POWER SYSTEMS TO BUILDING STEEL PER NEC. CONFIRM THAT ALL EMERGENCY BRANCH AND NORMAL POWER GROUNDS ARE INTERCONNECTED PER NFPA 99 AND NEC 517.14.
C. REFER TO ELECTRICAL DETAILS SHEET E6.01 FOR GROUND BAR MOUNTING AND CONNECTION REQUIREMENTS.

LEGEND:

BMGB - BUILDING MAIN GROUND BUSBAR
TMGB - TELECOMMUNICATIONS MAIN GROUND BUSBAR
TGB - TELECOMMUNICATIONS GROUND BUSBAR
GB - GROUND BUSBAR

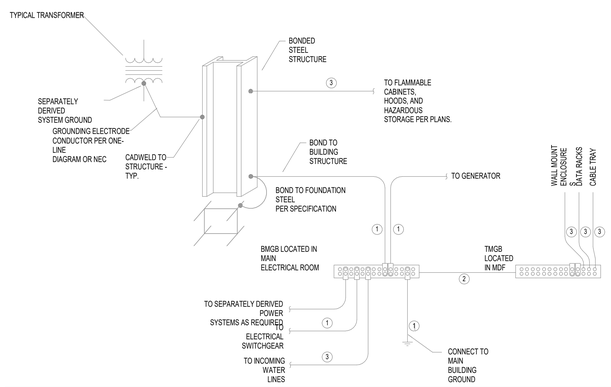

JRA architects
3225 Summit Square Place, Suite 200
Lexington, Kentucky 40509
859.252.6781

NOT FOR CONSTRUCTION

RESERVED FOR AHJ STAMP

CMTA

RFP 2 DRAWINGS

UK INDOOR TRACK FACILITY

UNIVERSITY OF KENTUCKY
LEXINGTON, KENTUCKY

ELECTRICAL

PROJECT	202258
DATE	8.31.22

REVISIONS

No.	Description	Date

JRA ARCHITECTS HAS RETAINED AN ELECTRONIC VERSION OF THESE DRAWINGS. THE CLIENT AGREES NOT TO REUSE THESE DRAWINGS - IN ELECTRONIC OR ANY OTHER FORMAT - IN WHOLE, OR IN PART, FOR ANY PURPOSE OTHER THAN FOR THE PROJECT. THE CLIENT AGREES NOT TO TRANSFER THESE ELECTRONIC FILES TO OTHERS WITHOUT THE PRIOR WRITTEN CONSENT OF THE ARCHITECT. THE CLIENT FURTHER AGREES TO WAIVE ALL CLAIMS AGAINST THE ARCHITECT RESULTING IN ANY WAY FROM ANY CHANGES MADE OR REUSE TO OR REUSE OF THE ELECTRONIC FILES FOR ANY OTHER PROJECT BY ANYONE OTHER THAN THE ARCHITECT.

ELECTRICAL DETAILS

E-701

COPYRIGHT 2022 - JRA, INC.

C:\Users\samos\Documents\KXTF22 Central File_nolanjamos.rvt
8/31/2022 4:38:09 PM

C:\Users\samos\Documents\XXTF22 Central File_solanijamos.rvt

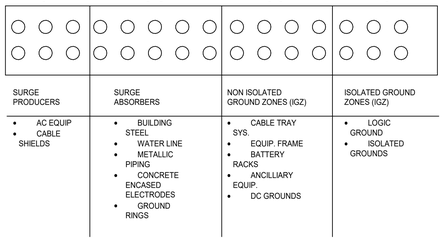

NOTE:
CONNECTIONS TO GROUND BARS SHALL BE GROUPED BY THE TYPE OF CONNECTION. BUS BARS SHALL BE LOGICALLY DIVIDED
INTO 4 AREAS AS SHOWN.

GROUND BAR CONFIGURATION

NO SCALE

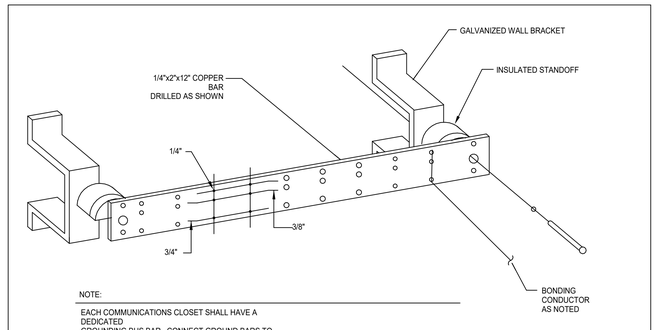

NOTE:
EACH COMMUNICATIONS CLOSET SHALL HAVE A DEDICATED
GROUNDING BUS BAR. CONNECT GROUND BARS TO MASTER
GROUND BAR IN MDF ROOM WITH #4 COPPER. BOND MASTER
GROUND BAR TO ELECTRICAL SERVICE ENTRANCE WITH # 1-0
COPPER. SECURE CONDUCTOR TO WALL PER NEC.

COMMUNICATIONS GROUND BAR

NOT TO SCALE

NOTES:

A. REFER TO FLOOR PLAN FOR DEVICES TO BE INSTALLED IN EACH ROOM.

B. COORDINATE EXACT LOCATION OF ALL DEVICE ROUGH-INS WITH ARCHITECT PRIOR TO INSTALLATION.

C. EACH A/V RISER LOCATION TO INCLUDE IN-WALL INSPECTION BY UK AND PROJECT ENGINEER PRIOR TO WALL COVERING INSTALLATION.

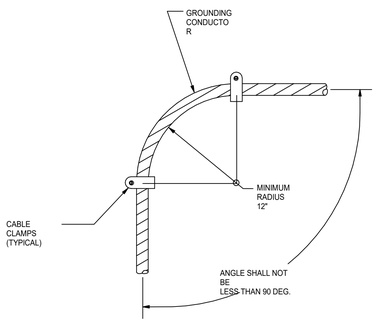

CONDUCTOR BENDING RADIUS DETAIL

NO SCALE

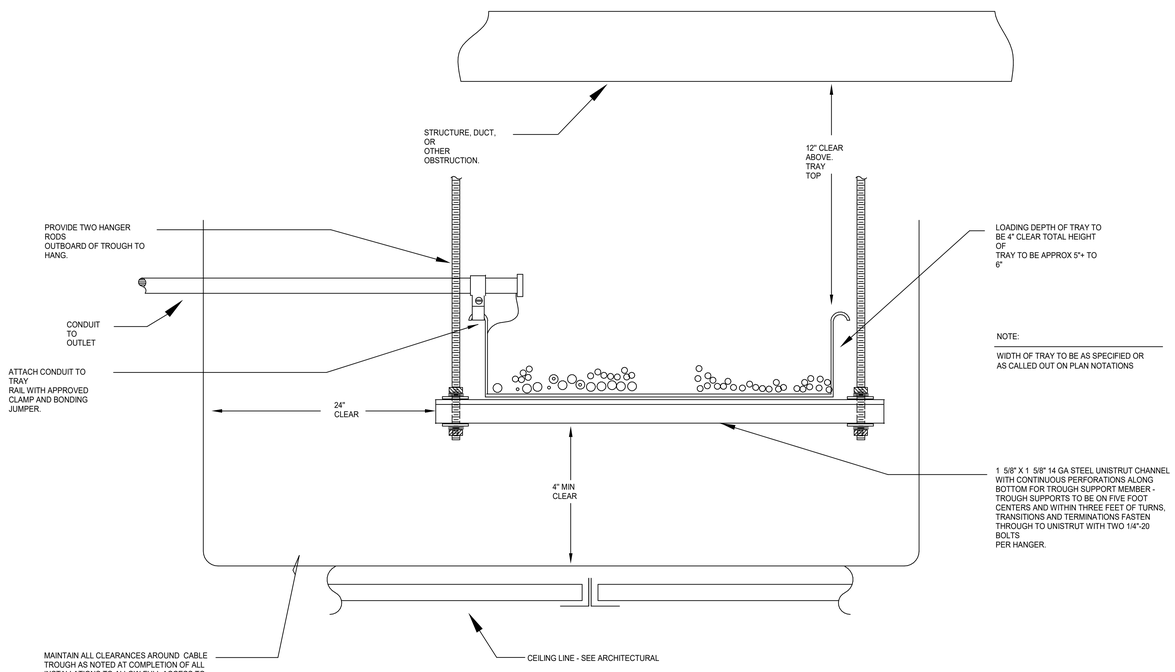

NOTE:
WIDTH OF TRAY TO BE AS SPECIFIED OR AS CALLED OUT ON PLAN NOTATIONS

DETAIL OF CABLE TROUGH INSTALLATION

NOT TO SCALE

JRA architects
3225 Summit Square Place, Suite 200
Lexington, Kentucky 40509
859.252.6781

NOT FOR CONSTRUCTION

RESERVED FOR AHJ STAMP

CMTA

RFP 2 DRAWINGS

UK INDOOR TRACK FACILITY
UNIVERSITY OF KENTUCKY
LEXINGTON, KENTUCKY

ELECTRICAL

PROJECT	202258
DATE	8.31.22

REVISIONS

No.	Description	Date

JRA ARCHITECTS HAS RETAINED AN ELECTRONIC VERSION OF THESE DRAWINGS. THE CLIENT AGREES NOT TO REUSE THESE DRAWINGS - IN ELECTRONIC OR ANY OTHER FORMAT - IN WHOLE, OR IN PART, FOR ANY PURPOSE OTHER THAN FOR THE PROJECT. THE CLIENT AGREES NOT TO TRANSFER THESE ELECTRONIC FILES TO OTHERS WITHOUT THE PRIOR WRITTEN CONSENT OF THE ARCHITECT. THE CLIENT FURTHER AGREES TO WAIVE ALL CLAIMS AGAINST THE ARCHITECT RESULTING IN ANY WAY FROM ANY UNAUTHORIZED CHANGES TO OR REUSE OF THE ELECTRONIC FILES FOR ANY OTHER PROJECT BY ANYONE OTHER THAN THE ARCHITECT.

ELECTRICAL DETAILS

E-702

COPYRIGHT 2022 - JRA, INC.

8/31/2022 4:38:10 PM

C:\Users\samos\Documents\XXTF22 Central File_nolanjamos.rvt

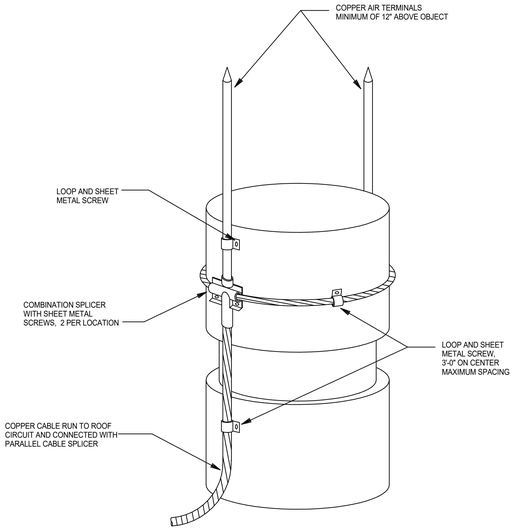

NOTE:
1. TYPICAL OF TWO (2) SIDES

AIR TERMINALS FOR EXHAUST FAN

NOT TO SCALE

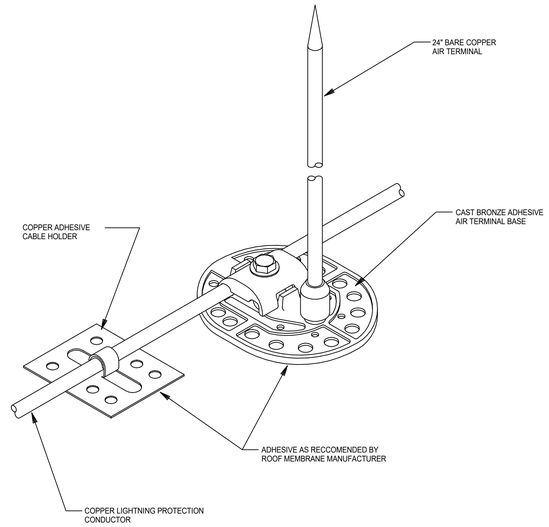

ADHESIVE MOUNT AIR TERMINAL DETAIL

NOT TO SCALE

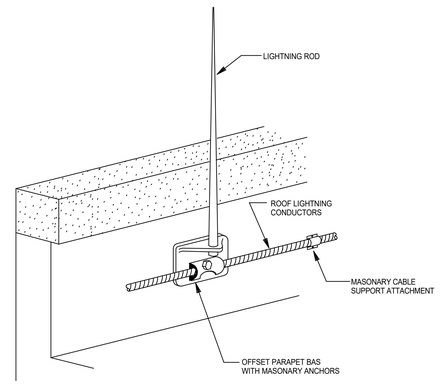

AIR TERMINAL AT ROOF EDGE

NOT TO SCALE

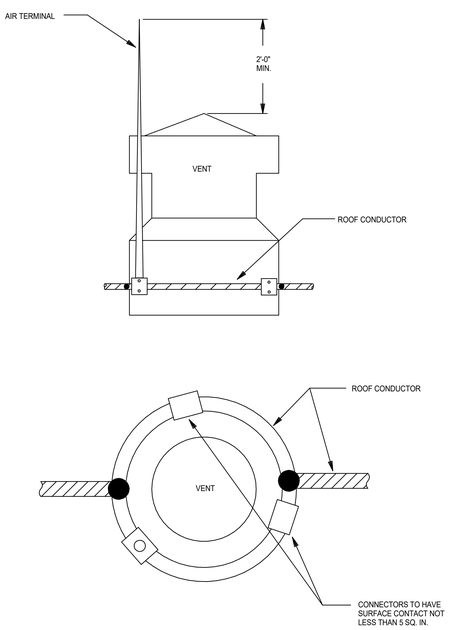

AIR TERMINAL AT ROOF VENT

NOT TO SCALE

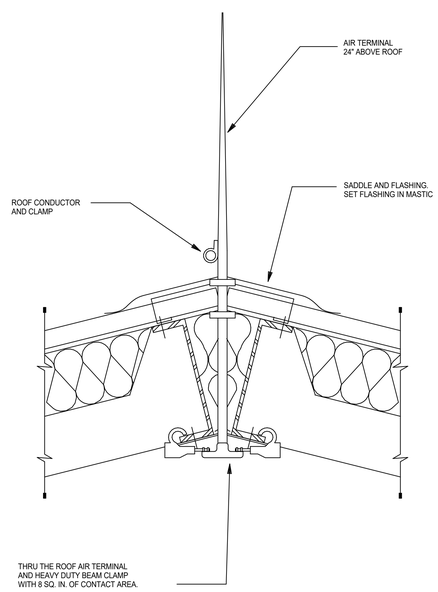

AIR TERMINAL AT ROOF PEAK

NOT TO SCALE

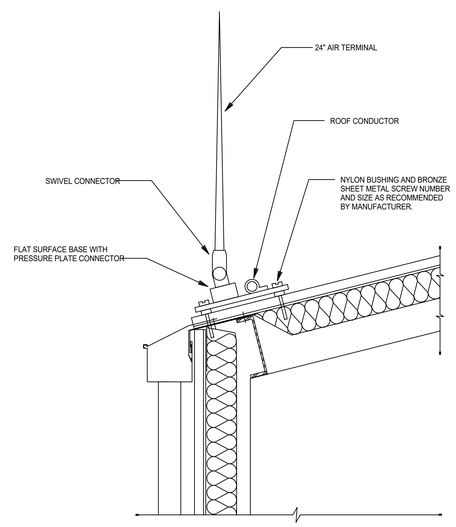

AIR TERMINAL AT ROOF EDGE

NOT TO SCALE

JRA architects
3225 Summit Square Place, Suite 200
Lexington, Kentucky 40509
859.252.6781

NOT FOR CONSTRUCTION

RESERVED FOR AHJ STAMP

CMTA

RFP 2 DRAWINGS

UK INDOOR TRACK FACILITY

UNIVERSITY OF KENTUCKY
LEXINGTON, KENTUCKY

ELECTRICAL

PROJECT	202258
DATE	8.31.22

REVISIONS

No.	Description	Date

JRA ARCHITECTS HAS RETAINED AN ELECTRONIC VERSION OF THESE DRAWINGS. THE CLIENT AGREES NOT TO REUSE THESE DRAWINGS - IN ELECTRONIC OR ANY OTHER FORMAT - IN WHOLE, OR IN PART, FOR ANY PURPOSE OTHER THAN FOR THE PROJECT. THE CLIENT AGREES NOT TO TRANSFER THESE ELECTRONIC FILES TO ANYONE OTHER THAN THE ARCHITECT WITHOUT CONSENT OF THE ARCHITECT. THE CLIENT FURTHER AGREES TO WAIVE ALL CLAIMS AGAINST THE ARCHITECT RESULTING IN ANY WAY FROM ANY UNAUTHORIZED CHANGES TO OR REUSE OF THE ELECTRONIC FILES FOR ANY OTHER PROJECT BY ANYONE OTHER THAN THE ARCHITECT.

ELECTRICAL DETAILS

E-703

COPYRIGHT 2022 - JRA, INC.

8/31/2022 4:38:10 PM

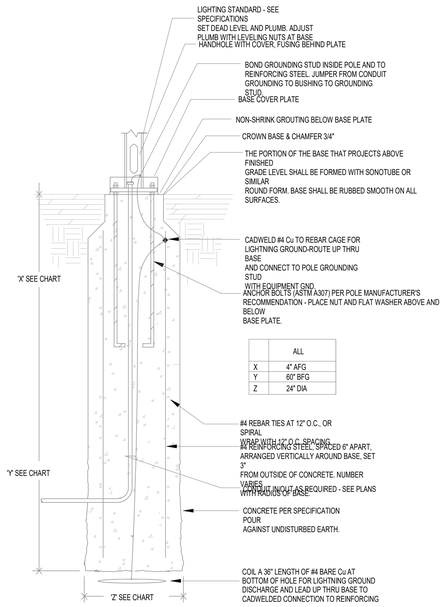

	ALL
X	4" AFG
Y	60" BFG
Z	24" DIA

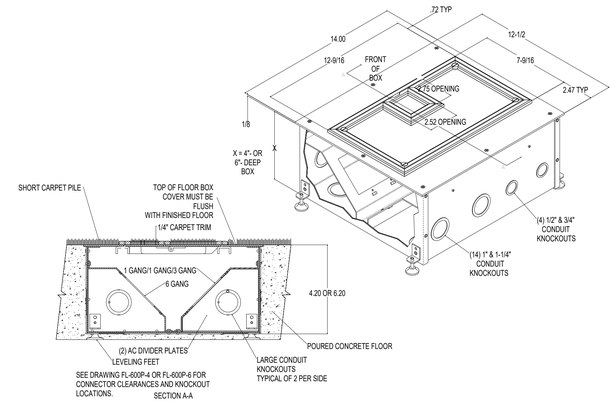

1 E7.3
SCALE: NONE

JRA architects
3225 Summit Square Place, Suite 200
Lexington, Kentucky 40509
859.252.6781

NOT FOR CONSTRUCTION

RESERVED FOR AHJ STAMP

CMTA

RFP 2 DRAWINGS

UK INDOOR TRACK FACILITY

UNIVERSITY OF KENTUCKY
LEXINGTON, KENTUCKY

ELECTRICAL

PROJECT	202258
DATE	8.31.22

REVISIONS

No.	Description	Date

JRA ARCHITECTS HAS RETAINED AN ELECTRONIC VERSION OF THESE DRAWINGS. THE CLIENT AGREES NOT TO REUSE THESE DRAWINGS - IN ELECTRONIC OR ANY OTHER FORMAT - IN WHOLE, OR IN PART, FOR ANY PURPOSE OTHER THAN FOR THE PROJECT. THE CLIENT AGREES NOT TO TRANSFER THESE ELECTRONIC FILES TO OTHERS WITHOUT THE PRIOR WRITTEN CONSENT OF THE ARCHITECT. THE CLIENT FURTHER AGREES TO WAIVE ALL CLAIMS AGAINST THE ARCHITECT RESULTING IN ANY WAY FROM ANY UNAUTHORIZED CHANGES TO OR REUSE OF THE ELECTRONIC FILES FOR ANY OTHER PROJECT BY ANYONE OTHER THAN THE ARCHITECT.

ELECTRICAL DETAILS

E-704

COPYRIGHT 2022 - JRA, INC.

C:\Users\samos\Documents\XXETF22 Central File_nolanjamos.rvt
8/31/2022 4:38:11 PM

CONSTRUCT INDOOR TRACK

LEXINGTON, KENTUCKY

UNIVERSITY OF KENTUCKY
LEXINGTON, KENTUCKY

PHASE 2 - DESIGN DEVELOPMENT

PROJECT MANUAL

JRA ARCHITECTS
CMTA CONSULTING ENGINEERS
BROWN + KUBICAN
CARMAN
PAIGE DESIGN GROUP

Copyright 2022 JRA

JRA PROJECT NO. 202258
UK PROJECT NO. 2584

AUGUST 2022

CONSRUCT INDOOR TRACK
UNIVERSITY OF KENTUCKY

PROJECT MANUAL

TABLE OF CONTENTS

TECHNICAL SPECIFICATIONS
DIVISIONS 01 THROUGH 33

SECTION & TITLE

DIVISION 01 – GENERAL REQUIREMENTS

01 2300	Alternates
01 3132	Geotechnical Data
01 4000	Quality Requirements
01 4110	Structural Special Inspections
01 4200	References
01 6000	Product Requirements
01 7300	Execution
01 7700	Closeout Procedures
01 7900	Demonstration and Training

DIVISION 02 – EXISTING CONDITIONS (Not Used)

DIVISION 03 – CONCRETE

03 0300	Structural Excavation and Backfill
03 3000	Cast-in-Place Concrete

DIVISION 04 – MASONRY

04 2000	Unit Masonry

DIVISION 05 – METALS

05 1000	Structural Anchors
05 1200	Structural Steel Framing
05 2100	Steel Joists
05 3100	Steel Decking
05 4000	Cold-Formed Metal Framing - Structural
05 5000	Metal Fabrications

DIVISION 06 – WOOD, PLASTICS, AND COMPOSITES

06 1053	Miscellaneous Carpentry
06 1600	Sheathing

06 2023 Interior Finish Carpentry
06 4113 Wood-Veneer-Faced Architectural Cabinets
06 4116 Plastic-Laminate-Clad Architectural Cabinets

DIVISION 07 – THERMAL AND MOISTURE PROTECTION

07 2100 Thermal Insulation
07 2119 Foamed-in-place Insulation
07 2713 Modified Bituminous Sheet Air Barriers
07 5423 Thermoplastic-Polyolefin (TPO) Roofing
07 6200 Sheet Metal Flashing and Trim
07 7100 Roof Specialties
07 7200 Roof Accessories
07 7253 Snow Guards
07 8413 Penetration Firestopping
07 8443 Joint Firestopping
07 9200 Joint Sealants
07 9219 Acoustical Joint Sealants
07 9513 Expansion Joint Cover Assemblies

DIVISION 08 – OPENINGS

08 1113 Hollow Metal Doors and Frames
08 3113 Access Doors and Frames
08 3323 Overhead Coiling Doors
08 4113 Aluminum-Framed Entrances and Storefronts
08 4113 Glazed Aluminum Curtain Walls
08 7100 Door Hardware
08 8000 Glazing
08 8300 Mirrors

DIVISION 09 – FINISHES

09 2216 Non-Structural Metal Framing
09 2900 Gypsum Board
09 3013 Tiling
09 5113 Acoustical Panel Ceilings
09 6513 Resilient Base and Accessories
09 6813 Tile Carpeting
09 9113 Exterior Painting
09 9123 Interior Painting

DIVISION 10 – SPECIALTIES

10 1100 Visual Display Units
10 1419 Dimensional Letter Signage
10 1423 Room-Identification Signage
10 2113 Plastic Toilet Compartments
10 2600 Wall and Door Protection
10 2800 Toilet, Bath, and Laundry Accessories

10 4413 Fire Protection Cabinets
10 4416 Fire Extinguishers
10 7300 Protective Covers

DIVISION 11 – EQUIPMENT

11 6623 Gymnasium Equipment
11 6833 Track and Field Equipment

DIVISION 12 – FURNISHINGS

12 3661 Solid Surfacing Countertops
12 9300 Site Furnishings

DIVISION 13 – SPECIAL CONSTRUCTION

13 1823.40 Track and Field Banked System
13 1823.41 Track and Field Line Markings
13 1823.42 Track and Field Event Materials
13 1823.43 Track and Field NCAA Certification
13 3419 Metal Building Systems

DIVISION 14 – CONVEYING SYSTEMS (Not Used)

DIVISION 20 – MECHANICAL PROVISIONS APPLICABLE TO DIVISIONS (Not Used)

20 0100 General Provisions
20 0200 Scope of the Mechanical Work
20 0300 Shop Drawings, Descriptive Literature, Maintenance Manuals, Parts Lists, Special Keys and Tools
20 0500 Coordination Among Trades, Connection of Equipment
20 1100 Sleeving, Cutting, Patching and Repairing
20 1200 Excavation, Trenching, Backfilling & Grading
20 1300 Pipe, Pipe Fittings, and Pipe Support
20 1310 Welding
20 2100 Valves and Cocks
20 2110 Access to Valves, Equipment, Filters, Etc.
20 2200 Insulation
20 2300 Thermometers and Others, Monitoring Instruments
20 2400 Identifications, Tags, Charts, Etc.
20 2500 Hangers, Clamps, Attachments, Etc.
20 3100 Testing, Balancing, Lubrication and Adjustments

DIVISION 21 – FIRE SUPPRESSION (Not Used)

21 0100 Fire Protection

DIVISION 22 – PLUMBING

22 0100	Plumbing Specialties
22 0200	Plumbing Fixtures, Fittings and Trim
22 0300	Plumbing Equipment
22 1313	Facility Sanitary Sewer

DIVISION 23 – HEATING, VENTILATING, AND AIR CONDITIONING

23 0200	HVAC Equipment
23 1100	Registers, Grilles, Diffuser and Louvers
23 1200	Sheet Metal & Flexible Duct

DIVISION 25 – INTEGRATED AUTOMATION (Not Used)

25 0100	Motor Starters and Other Electrical Requirements for Mechanical Equipment
25 0200	Controls – Direct Digital

DIVISION 26 – ELECTRICAL

26 0501	General Provisions
26 0502	Scope of the Electrical Work
26 0503	Shop Drawings, Literature, Manuals, Parts Lists, and Special Tools
26 0504	Sleeving, Cutting, Patching and Repairing
26 0505	Demolition, Restoration and Salvage
26 0508	Coordination Among Trades, Systems Interfacing and Connection of Equipment Furnished by Others
26 0519	Conductors, Identifications, Splicing Devices and Connectors
26 0526	Grounding and Bonding
26 0531	Cabinets, Outlet Boxes and Pull Boxes
26 0533	Raceways and Fittings
26 0544	Excavation, Trenching, Backfilling and Grading
26 0553	Identifications
26 0573	Electrical Studies
26 2416	Panelboards
26 2726	Wiring Devices and Plates
26 4113	Lightning Protection for Structures
26 4313	Surge Suppression Systems
26 5113	Lighting Fixtures and Lamps

DIVISION 27 – COMMUNICATIONS

27 0501	General - Telecommunications
27 0610	Voice Data Network System

DIVISION 28 – ELECTRONIC SAFETY AND SECURITY (Not Used)

28 0501	General Safety Security
28 1643	Perimeter Security Safety
28 2300	Video Surveillance
28 3100	Fire Alarm System

DIVISION 31 – EARTHWORK

31 2000	Earth Moving
31 2001	Stormwater Pollution Prevention Plan
31 3116	Termite Control

DIVISON 32 – EXTERIOR IMPROVEMENTS

32 1216	Asphalt Paving
32 1313	Concrete Paving
32 1373	Concrete Paving Joint Sealants
32 1443	Pourous Unit Paving
32 3113	Chain Link Fences and Gates
32 3119	Decorative Metal Fences and Gates
32 9200	Turf and Grasses
32 9300	Plants

DIVISION 33 – SITE UTILITIES

33 4100	Storm Utility Drainage Piping
33 4600	Subdrainage

END OF TABLE OF CONTENTS

SECTION 01 2300 - ALTERNATES

PART 1 - GENERAL

1.1 RELATED DOCUMENTS

A. Drawings and general provisions of the Contract, including General and Supplementary Conditions and other Division 01 Specification Sections, apply to this Section.

1.2 SUMMARY

A. Section includes administrative and procedural requirements for alternates.

1.3 DEFINITIONS

A. Alternate: An amount proposed by bidders and stated on the Bid Form for certain work defined in the bidding requirements that may be added to or deducted from the base bid amount if the Owner decides to accept a corresponding change either in the amount of construction to be completed or in the products, materials, equipment, systems, or installation methods described in the Contract Documents.
   1. Alternates described in this Section are part of the Work only if enumerated in the Agreement.
   2. The cost or credit for each alternate is the net addition to or deduction from the Contract Sum to incorporate alternates into the Work. No other adjustments are made to the Contract Sum.

1.4 PROCEDURES

A. Coordination: Revise or adjust affected adjacent work as necessary to completely integrate work of the alternate into Project.
   1. Include, as part of each alternate, miscellaneous devices, accessory objects, and similar items incidental to or required for a complete installation, whether or not indicated as part of alternate.

B. Execute accepted alternates under the same conditions as other Work of the Contract.

C. Schedule: A Part 3 "Schedule of Alternates" Article is included at the end of this Section. Specification Sections referenced in schedule contain requirements for materials necessary to achieve the work described under each alternate.

PART 2 - PRODUCTS (Not Used)

PART 3 - EXECUTION

3.1 SCHEDULE OF ALTERNATES

A. Alternate No. 1: Band Storage
   1. Base Bid: Building without Band Storage section.
   2. Alternate: Add Band Storage to building, approximately 2,248 S.F. metal building.

B. Alternate No. 2: Air Conditioning for Track Practice Area
   1. Base Bid: Heating only for Track Building
   2. Alternate: Add air conditioning for track practice area.

C. Alternate No. 3: Roof Eave on East of PEMB
   1. Base Bid: PEMB with standard gable trim on east gable
   2. Alternate: Add shadowline gable extension on east end of PEMB

D. Alternate No. 4: Brick Wainscot on PEMB
   1. Base Bid: PEMB on Sports Center Drive side to have no brick wainscot
   2. Alternate: Add brick wainscot along west end of PEMB

E. Alternate No. 5: Promenade Sidewalk
   1. Base Bid:
   2. Alternate: Add promenade sidewalk and plantings as indicated.

F. Alternate No. 6: UK Logo Signs
   1. Base Bid: No logo signs
   2. Alternate: Add two UK logo signs on building as indicated.

G. Alternate No. 7: Canopy Back Lighting.
   1. Base Bid:
   2. Alternate: Add back lighting for canopy as indicated.
   3.

END OF SECTION 01 2300

DOCUMENT 01 3132 - GEOTECHNICAL DATA

PART 1 - GENERAL

NOTICE TO BIDDERS

Geotechnical Data is included herein only as information available to bidders, and, as such, is not a part of the contract documents unless incorporated by the Agreement or by the General Conditions of the Contract.

SUMMARY

Geotechnical Report: The geotechnical report following this Section and the Log of Borings included with the Drawings are for the Contractor's information but are not a warranty of subsurface conditions. Information in the report and log was obtained solely for the Architect's use in preparing foundation design; any conclusions drawn from the report and log are the sole responsibility of the Contractor. Neither the Architect nor the Owner assumes responsibility for subsurface conditions other than at the locations, and at the time, the investigations were made. No claim for extra compensation or extension of time will be allowed for subsurface conditions inconsistent with data shown, except as provided elsewhere herein.

PART 2 - PRODUCTS (not applicable)

PART 3 - EXECUTION (not applicable)

END OF DOCUMENT 01 3132

SECTION 01 4000 - QUALITY REQUIREMENTS

1.1 DEFINITIONS

A. Quality-Assurance Services: Activities, actions, and procedures performed before and during execution of the Work to guard against defects and deficiencies and substantiate that proposed construction will comply with requirements.

B. Quality-Control Services: Tests, inspections, procedures, and related actions during and after execution of the Work to evaluate that actual products incorporated into the Work and completed construction comply with requirements.

1.2 QUALITY ASSURANCE

A. Delegated-Design Services: For products and systems assigned to Contractor to be designed and certified by Contractor's design professional to be in compliance with performance and design criteria.

B. Qualifications:

1. Contractor's quality-control personnel.
2. Manufacturer.
3. Fabricator.
4. Installer.
5. Professional engineer.
6. Specialists.
7. Testing agency.
8. Manufacturer's technical representative.
9. Factory-authorized service representative.

C. Preconstruction testing.

D. Mockups: For each form of construction and finish required, using materials indicated for the completed Work.

1. Demonstrate the proposed range of aesthetic effects and workmanship.
2. Maintain mockups as a standard for judging the completed Work.
3. Demolish and remove mockups when directed unless otherwise indicated.

E. Laboratory mockups constructed at testing facility.

1.3 QUALITY CONTROL

A. Owner Responsibilities: Where indicated as Owner's responsibility, Owner will engage a qualified testing agency to perform these services.

1. Payment will be made from testing and inspecting allowances.

B. Contractor Responsibilities: Tests and inspections not explicitly assigned to Owner are Contractor's responsibility.

C. Manufacturer's field services.

D. Retesting/Reinspecting: Regardless of whether original tests or inspections were Contractor's responsibility, provide quality-control services, including retesting and reinspecting, for construction that replaced Work that failed to comply with the Contract Documents.

E. Associated Services: Access to the Work, taking and storing samples, and delivery of samples to testing agency.

F. Special Tests and Inspections: Owner will engage a qualified special inspector to conduct special tests and inspections required by authorities having jurisdiction as the responsibility of Owner.

G. Test and inspection log.

H. Repair and Protection: Contractor's responsibility, regardless of the assignment of responsibility for quality-control services.

END OF SECTION 01 4000

SECTION 014110– STRUCTURAL SPECIAL INSPECTION

PART 1 – GENERAL

1.1 RELATED DOCUMENTS

1.2 SUMMARY

A. Special Inspections as defined in Section 1704 of The Kentucky Building Code are required.

B. The Inspection Agency shall conduct inspections under the supervision of a qualified professional engineer licensed in the State of Kentucky (Special Inspector).

C. Special inspections are required for the following materials and work:

1. Inspection of Fabricators per Section 1704.2.5 of the Kentucky Building Code.
2. Steel Construction per Section 1705.2 of the Kentucky Building Code.
3. Concrete Construction per Section 1705.3 of the Kentucky Building Code.
4. Prepared Fill per Section 1705.6 of the Kentucky Building Code.

1.3 SCOPE

1.4 DEFINITIONS

1.5 SELECTION AND PAYMENT

1.6 QUALITY ASSURANCE

PART 2 – EXECUTION

2.1 PROGRESS MEETINGS

2.2 CONTRACTOR’S RESPONSIBILITIES

2.3 SPECIAL INSPECTOR’S RESPONSIBILITIES

2.4 INSPECTION OF FABRICATORS

2.5 INSPECTION OF STEEL CONSTRUCTION

2.6 INSPECTION OF COLD-FORMED METAL (STRUCTURAL) CONSTRUCTION

2.7 INSPECTION OF STRUCTURAL ANCHORS

2.8 INSPECTION OF CONCRETE CONSTRUCTION

2.9 INSPECTION OF SOILS

END OF SECTION 014110

SECTION 01 4200 - REFERENCES

1.1 DEFINITIONS

A. Approved.

B. Directed.

C. Indicated.

D. Regulations.

E. Furnish.

F. Install.

G. Provide.

H. Project site.

1.2 INDUSTRY STANDARDS

A. Publication Dates: In effect as of the date of the Contract Documents unless otherwise indicated.

1.3 ABBREVIATIONS AND ACRONYMS

A. Industry Organizations: List included in this Section and referred to Gale's "Encyclopedia of Associations: National Organizations of the U.S." or Columbia Books' "National Trade & Professional Associations of the United States."

B. Code Agencies: List included in this Section.

C. Federal Government Agencies: List included in this Section.

D. Standards and Regulations: List included in this Section.

E. State Government Agencies: List included in this Section.

END OF SECTION 01 4200

SECTION 01 6000 - PRODUCT REQUIREMENTS

1.1 ACTION SUBMITTALS

A. Comparable Product Requests: Architect will notify Contractor through Construction Manager of approval or rejection within 15 days of receipt of request, or seven days of receipt of additional information.

1.2 PRODUCT DELIVERY, STORAGE, AND HANDLING

A. Use means and methods that will prevent damage, deterioration, and loss, including theft.

B. Store products to allow for inspection and measurement or counting of units.

C. Provide for storage of materials and equipment by Owner.

1.3 PRODUCT WARRANTIES

A. Manufacturer's disclaimers and limitations on product warranties do not relieve Contractor of obligations under requirements of the Contract Documents.

B. Special Warranties: Prepare a written document that contains appropriate terms and identification, ready for execution.

1.4 PRODUCT SELECTION PROCEDURES

A. Product Selection Procedures:

1. Sole Product: Product named that complies with requirements.
2. Sole Manufacturer/Source: Product by manufacturer or from source named that complies with requirements.
3. Limited List of Products: One of the products listed that complies with requirements. Comparable products will not be considered.
4. Limited List of Manufacturers: Product by one of the manufacturers listed that complies with requirements. Comparable products will not be considered.
5. Non-Limited List of Products: One of the products listed that complies with requirements, or another product submitted by Contractor that meets requirements. Substitution request is not required.
6. Non-Limited List of Manufacturers: Product by one of the manufacturers listed that complies with requirements, or product of another manufacturer that meets requirements. Substitution request is not required.
7. Basis-of-Design Product: Either the specified product or a comparable product by one of the other named manufacturers, approved by Architect prior to normal Project submittal.
8. Visual Matching Specification: Product that matches Architect's sample. Architect's decision will be final.
9. Visual Selection Specification: Product (and manufacturer) that complies with other specified requirements. Architect will select color, gloss, pattern, density, or texture from manufacturer's product line that includes both standard and premium items.

1.5 COMPARABLE PRODUCTS

A. Conditions for Consideration:

1. Product does not require revisions to the Contract Documents, is consistent with the Contract Documents and will produce the indicated results, and is compatible with other portions of the Work.
2. Comparison of proposed product with those named in the Specifications.
3. Product provides specified warranty.
4. Similar installations, if requested.
5. Samples, if requested.

END OF SECTION 01 6000

SECTION 01 7300 - EXECUTION

1.1 INFORMATIONAL SUBMITTALS

A. Qualification data.

B. Certificates: Signed by land surveyor certifying that location and elevation of improvements comply with requirements.

1.2 EXECUTION

A. Existing Conditions: Existence and location of site improvements, utilities, and other construction affecting the Work must be investigated and verified.

B. Review of the Contract Documents and field conditions.

C. Construction Layout: Engage a land surveyor to lay out the Work using accepted surveying practices.

D. Field Engineering: Owner will identify existing benchmarks, control points, and property corners. Locate existing permanent benchmarks, control points, and similar reference points.

1. Benchmarks: Establish two permanent benchmarks on Project site.
2. Certified survey of construction and sitework.

E. Installation: Comply with manufacturer's written instructions.

F. Remove and replace damaged, defective, or nonconforming Work.

1.3 CUTTING AND PATCHING

A. Provide temporary support.

B. Protect in-place construction.

C. Protect adjacent occupied areas.

D. Existing Utility Services and Mechanical/Electrical Systems: Minimize interruption to occupied areas.

1.4 OWNER-INSTALLED PRODUCTS

A. Provide access to Project site for Owner's personnel.

B. Inform Owner of Contractor's preferred construction schedule for Owner's portion of the Work. Adjust construction schedule based on a mutually agreeable timetable.

C. Include Owner's personnel at preinstallation conferences.

1.5 PROGRESS CLEANING

A. Clean Project site and work areas daily. Dispose of materials lawfully.

B. Keep installed work clean.

C. Remove debris from concealed spaces.

1.6 STARTING AND ADJUSTING

A. Start equipment and operating components to confirm proper operation.

B. Adjust equipment for proper operation.

1.7 PROTECTION OF INSTALLED CONSTRUCTION

A. Provide final protection and maintain conditions that ensure Work is without damage.

END OF SECTION 01 7300

SECTION 01 7700 - CLOSEOUT PROCEDURES

1.1 CLOSEOUT PROCEDURES

A. Prepare and submit Contractor's list of incomplete items (punch list) in the form of upload to web-based project website.

B. Submit closeout items required in other Sections.

C. Submit project warranties.

D. Complete final cleaning.

E. Replace bulbs that are dim or burned out.

F. Clean ducts, blowers, and coils if units were operated without filters during construction or that display contamination with particulate matter on inspection.

G. Touch up or repair finishes.

END OF SECTION 01 7700

SECTION 01 7900 - DEMONSTRATION AND TRAINING

1.1 INSTRUCTION PROGRAM

A. Provide training for each system and for equipment not part of a system, presented by factory-authorized service representatives.

B. Program Structure: Provide training modules for each of the following:

1. Basis of system design, operational requirements, and criteria.
2. Documentation.
3. Emergencies.
4. Operations.
5. Adjustments.
6. Troubleshooting.
7. Maintenance.
8. Repairs.

C. Facilitator to prepare instruction program and training modules and to coordinate instructors.

1.2 DEMONSTRATION AND TRAINING VIDEO RECORDINGS

A. Record demonstration and training video recordings produced by professional videographer. Provide written transcript of each recording.

END OF SECTION 01 7900

SECTION 030300 – STRUCTURAL EXCAVATION AND BACKFILL

PART 1 - GENERAL

1.1 RELATED DOCUMENTS

A. Drawings and general provisions of the Contract, including General and Supplementary Conditions and Division 1 Specification Sections, apply to this Section.

1.2 SUMMARY

A. Structural Excavation and Backfill includes:

1. Preparing subgrades for slabs on grade.
2. Excavating and backfilling for building foundations from rough grade.
3. Over-excavation and structural backfill to achieve adequate support for foundations.
4. Subsurface drainage backfill for foundation walls.

B. Related Sections: The following Sections contain requirements that relate to this Section:

1. Division 1 Section “Structural Special Inspection.”
2. Division 1 Section "Temporary Facilities and Controls."
3. Division 3 Section "Cast-in-Place Concrete."
4. Division 31 Section "Dewatering."
5. Division 31 Section "Excavation Support and Protection."
6. Division 31 Section “Earth Moving.”
7. Division 33 Section "Subdrainage."

1.4 DEFINITIONS

1.5 SUBMITTALS

PART 2 - PRODUCTS

2.1 SOIL MATERIALS

2.2 CONTROLLED LOW-STRENGTH MATERIAL

PART 3 - EXECUTION

3.1 PREPARATION

3.2 DEWATERING

3.3 EXCAVATION, GENERAL

3.4 STRUCTURAL EXCAVATION

3.5 SUBGRADE INSPECTION

3.6 UNAUTHORIZED EXCAVATION

3.7 STORAGE OF SOIL MATERIALS

3.8 BACKFILL, GENERAL

3.9 SOIL FILL

3.10 SOIL MOISTURE CONTROL

3.11 COMPACTION OF SOIL BACKFILLS AND FILLS

3.12 GRADING

3.13 SUBBASE UNDER CONCRETE SLABS-ON-GRADE

3.14 FIELD QUALITY CONTROL

3.15 DISPOSAL OF SURPLUS AND WASTE MATERIALS

END OF SECTION 030300

SECTION 033000 – CAST-IN-PLACE CONCRETE

PART 1 – GENERAL

1.1 RELATED DOCUMENTS

1.2 SUMMARY

A. This Section specifies cast-in-place concrete, including formwork, reinforcing, mix design, placement procedures, and finishes. This section applies to concrete work shown on the structural drawings. See Division 2 for site concrete.

B. Cast-in-place concrete includes the following:

1. Foundations and footings.
2. Slabs-on-grade.
3. Foundation walls.
4. Equipment pads and bases.

C. Related Sections: The following Sections contain requirements that relate to this Section:

1. Division 1 Section “Structural Special Inspection.”
2. Division 7 Section “Thermal and Moisture Protection.”

D. Coordination: Unless other satisfactory agreements are specifically entered into by contractors concerned, all miscellaneous iron and steel, sleeves, anchors, etc., required by work of other contractors, will be furnished and installed by such other contractors with the cooperation of this contractor.

1.3 SUBMITTALS

1.4 QUALITY ASSURANCE

PART 2 - PRODUCTS

2.1 FORM MATERIALS

2.2 REINFORCING MATERIALS

2.3 CONCRETE MATERIALS

2.4 RELATED MATERIALS

2.5 PROPORTIONING AND DESIGNING MIXES

2.6 ADMIXTURES

2.7 CONCRETE MIXING

PART 3 - EXECUTION

3.1 GENERAL

3.2 FORMS

3.3 VAPOR RETARDER INSTALLATION

3.4 PLACING REINFORCEMENT

3.5 JOINTS

3.6 INSTALLING EMBEDDED ITEMS

3.7 PREPARING FORM SURFACES

3.8 CONCRETE PLACEMENT

3.9 FINISHING FORMED SURFACES

3.10 MONOLITHIC SLAB FINISHES

3.11 FACE FLOOR PROFILE NUMBERS (F-NUMBERS)

3.12 MISCELLANEOUS CONCRETE ITEMS

3.13 CONCRETE CURING AND PROTECTION

3.14 PENETRATING CONCRETE SEALER

3.1 PENETRATING CONCRETE SEALER AND LIQUID DENSIFIER

3.2 SHORES AND SUPPORTS

3.3 REMOVING FORMS

3.4 REUSING FORMS

3.5 CONCRETE SURFACE REPAIRS

3.6 QUALITY CONTROL

END OF SECTION 033000

SECTION 04 2000 - UNIT MASONRY

1.1 PERFORMANCE REQUIREMENTS

A. Net-Area Compressive Strengths of Structural Unit Masonry: As indicated.

1.2 MATERIALS

A. Concrete Masonry Units (CMUs):
   1. CMUs: Lightweight.

B. Brick: Clay face brick.

C. Reinforcement: Uncoated-steel reinforcing bars.

D. Masonry-Joint Reinforcement:

   1. Interior Walls: Mill- galvanized, carbon steel.
   2. Exterior Walls: Hot-dip galvanized, carbon steel.

E. Ties and Anchors: Galvanized steel.
   1. Individual wire ties.
   2. Adjustable anchors for connecting to structural steel framing.
   3. Adjustable anchors for connecting to concrete.
   4. Rigid anchors.
   5. Adjustable Masonry-Veneer Anchors: Screw attached.

F. Embedded Flashing:
   1. Partially Exposed Flashing: Stainless steel.
   2. Concealed (Flexible) Flashing: butyl rubber.

      a. Used with stainless steel drip edge.

   3. Single-Wythe CMU Flashing System: Polyethylene flashing pans and web covers.

G. Weep/Vent Holes: cellular plastic.

H. Cavity drainage material.

I. Mortar:

   1. Portland cement-lime or mortar cement mortar unless otherwise indicated.

1.3 INSTALLATION

A. Match existing masonry coursing, bonding, color, and texture.

B. Bond Pattern: Running bond.

C. Clean masonry waste recycled as fill material.

END OF SECTION 04 2000

SECTION 051000 – STRUCTURAL ANCHORS

PART 1 – GENERAL

1.1 RELATED DOCUMENTS

1.2 SUMMARY

A. This Section includes post-installed metal anchors in concrete, masonry, and steel, as shown on drawings including schedules, notes, and details showing size and location of anchors, typical connections, and types of anchors required.

1. Adhesive anchors.
2. Wedge anchors.
3. Concrete screw anchors.
4. Powder actuated fasteners.

B. Related Sections: The following Sections contain requirements that relate to this Section:

1. Division 1 Section “Structural Special Inspection.”
2. Division 3 Section “Cast-in-Place Concrete.”
3. Division 5 Section “Structural Steel Framing.”

1.3 SUBMITTALS

1.4 QUALITY ASSURANCE

1.5 DELIVERY, STORAGE, AND HANDLING

1.6 SEQUENCING

PART 2 - PRODUCTS

2.1 ADHESIVE ANCHORS

2.2 MECHANICAL ANCHORS

2.3 POWDER ACTUATED FASTENERS

PART 3 - EXECUTION

3.1 INSTALLATION

3.2 QUALITY CONTROL

END OF SECTION 051000

SECTION 051200 – STRUCTURAL STEEL FRAMING

PART 1 – GENERAL

1.1 RELATED DOCUMENTS

1.2 SUMMARY

A. This Section includes fabrication and erection of structural steel work, as shown on drawings including schedules, notes, and details showing size and location of members, typical connections, and types of steel required.

1. Structural steel is that work defined in American Institute of Steel Construction (AISC) “Code of Standard Practice” and as otherwise shown on drawings.

B. This Section includes architecturally exposed structural steel.

C. Related Sections: The following Sections contain requirements that relate to this Section:

1. Division 1 Section “Structural Special Inspection.”
2. Division 3 Section “Cast-in-Place Concrete.”
3. Division 5 Section “Steel Joists”.
4. Division 9 Section “Painting.”

1.3 PERFORMANCE REQUIREMENTS

1.4 SUBMITTALS

1.5 QUALITY ASSURANCE

1.6 DELIVERY, STORAGE, AND HANDLING

1.7 SEQUENCING

PART 2 - PRODUCTS

2.1 MATERIALS

2.2 PRIMER

2.3 GROUT

2.4 FABRICATION

2.5 SHOP CONNECTIONS

2.6 SHOP PRIMING

PART 3 - EXECUTION

3.1 EXAMINATION

3.2 PREPARATION

3.3 ERECTION

3.4 FIELD CONNECTIONS

3.5 QUALITY CONTROL

3.6 CLEANING

END OF SECTION 051200

SECTION 052100 – STEEL JOIST FRAMING

PART 1 - GENERAL

1.1 RELATED DOCUMENTS

1.2 SUMMARY

A. This Section includes the following:

1. K-series open-web steel joists.
2. KCS-series open-web steel joists.
3. Joist accessories.

B. Related Sections: The following Sections contain requirements that relate to this Section:

1. Division 1 Section “Structural Special Inspection.”
2. Division 3 Section “Cast-in-Place Concrete.”
3. Division 5 Section “Structural Steel Framing.”
4. Division 9 Section “Painting.”

1.3 PERFORMANCE REQUIREMENTS

1.4 SUBMITTALS

1.5 QUALITY ASSURANCE

1.6 DELIVERY, STORAGE, AND HANDLING

PART 2 – PRODUCTS

2.1 MATERIALS

2.2 PRIMERS

2.3 STEEL JOISTS

2.4 JOIST ACCESSORIES

2.5 SHOP PAINTING

PART 3 – EXECUTION

3.1 EXAMINATION

3.2 INSTALLATION

3.3 QUALITY CONTROL

3.4 REPAIRS AND PROTECTION

END OF SECTION 052100

SECTION 053100 – STEEL DECKING

PART 1 – GENERAL

1.1 RELATED DOCUMENTS

1.2 SUMMARY

A. This Section includes the following:

1. Steel roof deck.

B. Related Sections: The following Sections contain requirements that relate to this Section:

1. Division 1 Section “Structural Special Inspection.”
2. Division 5 Section “Structural Steel Framing.”
3. Division 9 Section “Painting.”

1.3 SUBMITTALS

1.4 QUALITY ASSURANCE

1.5 DELIVERY, STORAGE, AND HANDLING

1.6 COORDINATION

PART 2 – PRODUCTS

2.1 MANUFACTURERS

2.2 ROOF DECK

2.3 ACCESSORIES

PART 3 – EXECUTION

3.1 EXAMINATION

3.2 PREPARATION

3.3 INSTALLATION, GENERAL

3.4 ROOF DECK INSTALLATION

3.5 QUALITY CONTROL

3.6 REPAIRS AND PROTECTION

END OF SECTION 053100

SECTION 054000 – COLD-FORMED METAL FRAMING – STRUCTURAL

PART 1 – GENERAL

1.1 RELATED DOCUMENTS

1.2 SUMMARY

A. This Section includes the following:

1. Exterior non-load-bearing curtain-wall framing.

B. Related Sections include the following:

1. Division 1 Section “Structural Special Inspection.”
2. Division 9 Section “Gypsum Board Assemblies.”

1.3 DEFINITIONS

1.4 PERFORMANCE REQUIREMENTS

1.5 SUBMITTALS

1.6 QUALITY ASSURANCE

1.7 DELIVERY, STORAGE, AND HANDLING

PART 2 – PRODUCTS

2.1 MANUFACTURERS

2.2 MATERIALS

2.3 NON-LOAD-BEARING CURTAIN-WALL FRAMING

2.4 FRAMING ACCESSORIES

2.5 ANCHORS, CLIPS, AND FASTENERS

2.6 MISCELLANEOUS MATERIALS

2.7 FABRICATION

PART 3 – EXECUTION

3.1 EXAMINATION

3.2 INSTALLATION, GENERAL

3.3 NON-LOAD-BEARING CURTAIN-WALL INSTALLATION

3.4 QUALITY CONTROL

3.5 REPAIRS AND PROTECTION

END OF SECTION 054000

SECTION 05 5000 - METAL FABRICATIONS

1.1 PRODUCTS

A. Materials: Steel plates, shapes, and bars Slotted channel framing Iron castings Aluminum.

B. Miscellaneous Framing and Supports: Galvanized where indicated Primed using zinc-rich primer where indicated.

1. Steel framing and supports for ceiling-hung toilet compartments mechanical and electrical equipment applications where framing and supports are not specified in other Sections.

C. Metal Ladders: Aluminum.

D. Metal Bollards: Schedule 40 steel pipe.

1. Primed using zinc-rich primer.

E. Metal Downspout Boots: Cast iron, primed using zinc-rich primer.

F. Loose bearing and leveling plates, galvanized, primed using zinc-rich primer.

G. Loose steel lintels, galvanized at exterior walls, primed using zinc-rich primer at exterior walls.

H. Anchor bolts, steel pipe sleeves, slotted-channel inserts, and wedge-type inserts cast into concrete or built into unit masonry.

I. Steel weld plates and angles not specified in other Sections, for casting into concrete.

END OF SECTION 05 5000

SECTION 06 1053 - MISCELLANEOUS ROUGH CARPENTRY

1.1 MATERIALS

A. Wood Products, General:

1. Maximum Moisture Content of Lumber: 15 percent for 2-inch nominal thickness or less, 19 percent for more than 2-inch nominal thickness.

B. Wood-Preservative-Treated Materials:

1. Preservative Treatment: AWPA U1; Use Category UC2 except Use Category UC3b for exterior construction and Use Category UC4a for items in contact with ground.

a. Preservative Chemicals: Containing no arsenic or chromium. Do not use inorganic boron (SBX) for sill plates.

2. Application: Items indicated and the following:

a. Items in contact with roofing or waterproofing.
b. Items in contact with concrete or masonry.
c. Framing less than 18 inches aboveground in crawlspaces.
d. Floor plates installed over concrete slabs-on-grade.

C. Fire-Retardant-Treated Materials:

1. Exterior type for exterior locations and where indicated.
2. Interior Type A, High Temperature (HT) for enclosed roof framing and where indicated.
3. Interior Type A unless otherwise indicated.
4. Application: Items indicated and the following:

a. Framing for raised platforms.
b. Concealed blocking.
c. Roof framing and blocking.
d. Items in contact with roofing.
e. Plywood backing panels.

D. Miscellaneous Lumber:

1. Dimension Lumber: Standard, Stud, or No. 3 grade any species.

2. Concealed Boards: 15 percent maximum moisture content.

a. Mixed southern pine, No. 2.

E. Plywood Backing Panels: fire-retardant treated.

1. Complies with low-emitting materials requirements of LEED for Schools.

F. Fasteners: Hot-dip galvanized steel where exposed to weather, in ground contact, in contact with treated wood, or in area of high relative humidity.

G. Metal Framing Anchors:

1. Metal: Galvanized steel; hot-dip heavy galvanized steel for wood-preservative-treated lumber and where indicated.

END OF SECTION 06 1053

SECTION 06 1600 - SHEATHING

1.1 MATERIALS

A. Wall Sheathing:
   1. Glass-Mat Gypsum: Type X, 5/8 inch thick.

B. Parapet Sheathing:
   1. Glass-Mat Gypsum: Type X, 5/8 inch thick.

C. Fasteners: Hot-dip galvanized steel where exposed to weather, in ground contact, in contact with treated wood, or in area of high relative humidity.

D. Miscellaneous Materials:

   1. Sealant for gypsum sheathing.
   2. Sheathing tape.

1.2 INSTALLATION

A. Gypsum Sheathing:
   1. Screw to cold-formed metal framing.

END OF SECTION 06 1600

SECTION 06 2023 - INTERIOR FINISH CARPENTRY

1.1 SUSTAINABILITY REQUIREMENTS
1. Certified wood.
2. Low-emitting adhesives.
3. Low-emitting composite wood products.

1.2 MATERIALS

A. Preservative Treatment by Pressure Process: Where indicated.

B. Interior Standing and Running Trim:
1. Hardwood Lumber Trim for Transparent Finish (Stain or Clear Finish): White Ash.

1.3 INSTALLATION

A. Install trim with minimum number of joints as is practical, using full-length pieces from maximum lengths of lumber available.

1. Do not use pieces less than 24 inches long, except where necessary.
2. Stagger joints in adjacent and related standing and running trim.
3. Miter at returns, miter at outside corners, and cope at inside corners to produce tight-fitting joints with full-surface contact throughout length of joint.
4. Use scarf joints for end-to-end joints.
5. Plane backs of casings to provide uniform thickness across joints where necessary for alignment.
6. Match color and grain pattern of trim for transparent finish (stain or clear finish) across joints.
7. Install trim after gypsum-board joint finishing operations are completed.
8. Install without splitting; drill pilot holes before fastening where necessary to prevent splitting.
9. Fasten to prevent movement or warping.
10. Countersink fastener heads on exposed carpentry work and fill holes.

END OF SECTION 06 2023

SECTION 06 4113 - WOOD-VENEER-FACED ARCHITECTURAL CABINETS

PART 1 - GENERAL

1.1 RELATED DOCUMENTS

A. Drawings and general provisions of the Contract, including General and Supplementary Conditions and Division 01 Specification Sections, apply to this Section.

1.2 SUMMARY

A. Section Includes:

1. Wood-veneer-faced architectural cabinets.
2. Wood furring, blocking, shims, and hanging strips for installing architectural cabinets that are not concealed within other construction.
3. Shop finishing of architectural cabinets.

B. Related Requirements:

1. Section 06 1053 "Miscellaneous Rough Carpentry" for wood furring, blocking, shims, and hanging strips required for installing cabinets that are concealed within other construction before cabinet installation.

1.3 COORDINATION

A. Coordinate sizes and locations of framing, blocking, furring, reinforcements, and other related units of Work specified in other Sections to support loads imposed by installed and fully loaded cabinets.

1.4 ACTION SUBMITTALS

A. Product Data: For each type of product.

1. Include data for fire-retardant treatment from chemical-treatment manufacturer and certification by treating plant that treated materials comply with requirements.

B. Shop Drawings: For architectural cabinets.

1. Include plans, elevations, sections, and attachment details.
2. Show large-scale details.
3. Show locations and sizes of furring, blocking, and hanging strips, including concealed blocking and reinforcement specified in other Sections.
4. Show locations and sizes of cutouts and holes for items installed in architectural cabinets.
5. Show veneer leaves with dimensions, grain direction, exposed face, and identification numbers indicating the flitch and sequence within the flitch for each leaf.

C. Samples: For each exposed product and for each color and finish specified, in manufacturer's standard size.

D. Samples for Initial Selection: For each type of exposed finish.

E. Samples for Verification: For the following:

1. Lumber for Transparent Finish: Not less than 5 inches wide by 12 inches long, for each species and cut, finished on one side and one edge.
2. Veneer Leaves: Representative of and selected from flitches to be used for transparent-finished cabinets.
3. Lumber and Panel Products with Shop-Applied Opaque Finish: 5 inches wide by 12 inches long for lumber and 8 by 10 inches for panels, for each finish system and color.

4. Corner Pieces:

a. Cabinet-front frame joints between stiles and rails and at exposed end pieces, 18 inches high by 18 inches wide by 6 inches deep.
b. Miter joints for standing trim.

5. Exposed Cabinet Hardware and Accessories: One full-size unit for each type and finish.

1.5 INFORMATIONAL SUBMITTALS

A. Qualification Data: For manufacturer and Installer.

B. Product Certificates: For each type of product.

1. Composite wood and agrifiber products.
2. Adhesives.

C. Evaluation Reports: For fire-retardant-treated materials, from ICC-ES.

1.6 QUALITY ASSURANCE

A. Manufacturer's Qualifications: Employs skilled workers who custom fabricate products similar to those required for this Project and whose products have a record of successful in-service performance.

B. Installer Qualifications: Manufacturer of products.

C. Mockups: Build mockups to verify selections made under Sample submittals, to demonstrate aesthetic effects, and to set quality standards for materials and execution.

1. Build mockups of typical architectural cabinets as shown on Drawings.
2. Subject to compliance with requirements, approved mockups may become part of the completed Work if undisturbed at time of Substantial Completion.

1.7 DELIVERY, STORAGE, AND HANDLING

A. Do not deliver cabinets until painting and similar finish operations that might damage architectural cabinets have been completed in installation areas. Store cabinets in installation areas or in areas where environmental conditions comply with requirements specified in "Field Conditions" Article.

1.8 FIELD CONDITIONS

A. Environmental Limitations: Do not deliver or install cabinets until building is enclosed, wet-work is complete, and HVAC system is operating and maintaining temperature and relative humidity at levels planned for building occupants during the remainder of the construction period.

B. Field Measurements: Where cabinets are indicated to fit to other construction, verify dimensions of other construction by field measurements before fabrication, and indicate measurements on Shop Drawings. Coordinate fabrication schedule with construction progress to avoid delaying the Work.

1. Locate concealed framing, blocking, and reinforcements that support cabinets by field measurements before being enclosed/concealed by construction, and indicate measurements on Shop Drawings.

C. Established Dimensions: Where cabinets are indicated to fit to other construction, establish dimensions for areas where cabinets are to fit. Provide allowance for trimming at site, and coordinate construction to ensure that actual dimensions correspond to established dimensions.

PART 2 - PRODUCTS

2.1 ARCHITECTURAL CABINET MANUFACTURERS

A. Source Limitations: Engage a qualified woodworking firm to assume responsibility for production of architectural cabinets with sequence-matched wood veneers and transparent-finished wood doors that are required to be of same species as architectural cabinets.

2.2 CABINETS, GENERAL

A. Quality Standard: Unless otherwise indicated, comply with the Architectural Woodwork Standards for grades of architectural cabinets indicated for construction, finishes, installation, and other requirements.

1. The Contract Documents contain requirements that are more stringent than the referenced woodwork quality standard. Comply with requirements of Contract Documents in addition to those of the referenced quality standard.

2.3 WOOD CABINETS FOR TRANSPARENT FINISH

A. Architectural Woodwork Standards Grade: Custom.

B. Type of Construction: Frameless.

C. Door and Drawer-Front Style: Flush overlay.
1. Door and Drawer: ¾ inch solid wood frame, mitered corners, with recessed veneer center panel and panel trim bead, matching Salem style door by Eastman St Woodworks.

D. Wood for Exposed Surfaces:

1. Species: White ash.

2. Blueprint Matching: Comply with veneer and other matching requirements indicated for blueprint-matched paneling.
3. Cut: Quarter cut/quarter sawn.
4. Grain Direction: Vertically for drawer fronts, doors, and fixed panels.
5. Matching of Veneer Leaves: Book match.
6. Veneer Matching within Panel Face: Balance match.
7. Veneer Matching within Room: Provide cabinet veneers in each room or other space from a single flitch with doors, drawer fronts, and other surfaces matched in a sequenced set with continuous match where veneers are interrupted perpendicular to the grain.

E. Semiexposed Surfaces:

1. Surfaces Other Than Drawer Bodies: Same species and cut indicated for exposed surfaces.

F. Dust Panels: 1/4-inch plywood or tempered hardboard above compartments and drawers unless located directly under tops.

G. Drawer Construction: Fabricate with exposed fronts fastened to subfront with mounting screws from interior of body.

1. Join subfronts, backs, and sides with glued dovetail joints.

2.4 WOOD MATERIALS

A. Wood Products: Provide materials that comply with requirements of referenced quality standard for each type of architectural cabinet and quality grade specified unless otherwise indicated.
1. Wood Moisture Content: 5 to 10 percent.

B. Composite Wood and Agrifiber Products: Provide materials that comply with requirements of referenced quality standard for each type of architectural cabinet and quality grade specified unless otherwise indicated.

1. Recycled Content of MDF and Particleboard: Postconsumer recycled content plus one-half of preconsumer recycled content not less than 25 percent.

C. Composite Wood Products: Verify products are made using ultra-low-emitting formaldehyde resins, as defined in the California Air Resources Board's "Airborne Toxic Control Measure to Reduce Formaldehyde Emissions from Composite Wood Products," or are made with no added formaldehyde.

1. Softwood Plywood: DOC PS 1, medium-density overlay.
2. Veneer-Faced Panel Products (Hardwood Plywood): HPVA HP-1.

2.5 FIRE-RETARDANT-TREATED MATERIALS

A. Fire-Retardant-Treated Materials, General: Where fire-retardant-treated materials are indicated, use materials that are acceptable to authorities having jurisdiction and with fire-test-response characteristics specified as determined by testing identical products per test method indicated by a qualified testing agency.

1. Use treated materials that comply with requirements of referenced quality standard. Do not use materials that are warped, discolored, or otherwise defective.

2. Use fire-retardant-treatment formulations that do not bleed through or otherwise adversely affect finishes. Do not use colorants to distinguish treated materials from untreated materials.
3. Identify fire-retardant-treated materials with appropriate classification marking of qualified testing agency in the form of removable paper label or imprint on surfaces that will be concealed from view after installation.

B. Fire-Retardant-Treated Lumber and Plywood: Products with a flame-spread index of 25 or less when tested according to ASTM E84, with no evidence of significant progressive combustion when the test is extended an additional 20 minutes, and with the flame front not extending more than 10.5 feet beyond the centerline of the burners at any time during the test.

1. Kiln-dry lumber and plywood after treatment to a maximum moisture content of 19 and 15 percent, respectively.
2. For items indicated to receive a stained or natural finish, use organic resin chemical formulation.
3. Mill lumber after treatment within limits set for wood removal that do not affect listed fire-test-response characteristics, using a woodworking shop certified by testing and inspecting agency.
4. Mill lumber before treatment and implement procedures during treatment and drying processes that prevent lumber from warping and developing discolorations from drying sticks or other causes, marring, and other defects affecting appearance of architectural cabinets.

2.6 CABINET HARDWARE AND ACCESSORIES

A. General: Provide cabinet hardware and accessory materials associated with architectural cabinets except for items specified in Section 08 7100 "Door Hardware."

B. Standards for Adjustable Shelf Brackets:

1. Basis-of-Design Product: CRL Satin Anodized 72" Aluminum Wall Standard.

C. Adjustable Shelf Brackets:

1. Basis-of-Design Product: CRL Satin Anodized Aluminum Bracket.

a. Size: As indicated on the drawings.
b. Provide clear plastic shelf rests for glass shelving at each bracket.

2.7 MISCELLANEOUS MATERIALS

A. Furring, Blocking, Shims, and Hanging Strips: Fire-retardant-treated softwood lumber, kiln-dried to less than 15 percent moisture content.

B. Anchors: Select material, type, size, and finish required for each substrate for secure anchorage. Provide metal expansion sleeves or expansion bolts for post-installed anchors. Use nonferrous-metal or hot-dip galvanized anchors and inserts at inside face of exterior walls and at floors.

C. Adhesives: Use adhesives that meet the testing and product requirements of the California Department of Public Health's "Standard Method for the Testing and Evaluation of Volatile Organic Chemical Emissions from Indoor Sources Using Environmental Chambers."

2.8 FABRICATION

A. Sand fire-retardant-treated wood lightly to remove raised grain on exposed surfaces before fabrication.

B. Fabricate architectural cabinets to dimensions, profiles, and details indicated. Ease edges and corners to 1/16-inch radius unless otherwise indicated.

C. Complete fabrication, including assembly and hardware application, to maximum extent possible before shipment to Project site. Disassemble components only as necessary for shipment and installation. Where necessary for fitting at site, provide ample allowance for scribing, trimming, and fitting.

1. Notify Architect seven days in advance of the dates and times architectural cabinet fabrication will be complete.
2. Trial fit assemblies at manufacturer's shop that cannot be shipped completely assembled. Install dowels, screws, bolted connectors, and other fastening devices that can be removed after trial fitting. Verify that various parts fit as intended and check measurements of assemblies against field measurements before disassembling for shipment.

D. Shop-cut openings to maximum extent possible to receive hardware, appliances, electrical work, and similar items. Locate openings accurately and use templates or roughing-in diagrams to produce accurately sized and shaped openings. Sand edges of cutouts to remove splinters and burrs.

E. Install glass to comply with applicable requirements in Section 088000 "Glazing" and in GANA's "Glazing Manual."

2.9 SHOP FINISHING

A. General: Finish architectural cabinets at manufacturer's shop as specified in this Section. Defer only final touchup, cleaning, and polishing until after installation.

B. Preparation for Finishing: Comply with referenced quality standard for sanding, filling countersunk fasteners, sealing concealed surfaces, and similar preparations for finishing architectural cabinets, as applicable to each unit of work.

1. Backpriming: Apply one coat of sealer or primer, compatible with finish coats, to concealed surfaces of cabinets.

C. Transparent Finish:

1. Architectural Woodwork Standards Grade: Custom.
2. Finish: System -11, catalyzed polyurethane.
3. Wash Coat for Closed-Grain Woods: Apply wash-coat sealer to cabinets made from closed-grain wood before staining and finishing.
4. Staining: Match Architect's sample.
5. Effect: Semifilled finish, produced by applying an additional finish coat to partially fill the wood pores.
6. Sheen: Satin, 31-45 gloss units measured on 60-degree gloss meter per ASTM D523.

PART 3 - EXECUTION

3.1 PREPARATION

A. Before installation, condition cabinets to humidity conditions in installation areas for not less than 72 hours.

3.2 INSTALLATION

A. Architectural Woodwork Standards Grade: Install cabinets to comply with quality standard grade of item to be installed.

B. Assemble cabinets and complete fabrication at Project site to extent that it was not completed in the shop.

C. Anchor cabinets to anchors or blocking built in or directly attached to substrates. Secure with countersunk, concealed fasteners and blind nailing. Use fine finishing nails or finishing screws for exposed fastening, countersunk and filled flush with cabinet surface.

1. For shop-finished items, use filler matching finish of items being installed.

D. Install cabinets level, plumb, and true in line to a tolerance of 1/8 inch in 96 inchesusing concealed shims.

1. Scribe and cut cabinets to fit adjoining work, refinish cut surfaces, and repair damaged finish at cuts.
2. Install cabinets without distortion so doors and drawers fit openings and are accurately aligned. Adjust hardware to center doors and drawers in openings and to provide unencumbered operation. Complete installation of hardware and accessory items as indicated.
3. Maintain veneer sequence matching of cabinets with transparent finish.
4. Fasten wall cabinets through back, near top and bottom, and at ends not more than 16 inches o.c. with No. 10 wafer-head screws sized for not less than 1-1/2-inch penetration into wood framing, blocking, or hanging strips.

E. Shop Finishes: Touch up finishing after installation of architectural cabinets. Fill nail holes with matching filler.

1. Apply specified finish coats, including stains and paste fillers if any, to exposed surfaces where only sealer/prime coats are shop applied.

3.3 ADJUSTING AND CLEANING

A. Repair damaged and defective cabinets, where possible, to eliminate functional and visual defects. Where not possible to repair, replace architectural cabinets. Adjust joinery for uniform appearance.

B. Clean, lubricate, and adjust hardware.

C. Clean cabinets on exposed and semiexposed surfaces. Touch up finishes to restore damaged or soiled areas.

END OF SECTION 06 4113

SECTION 06 4116 - PLASTIC-LAMINATE-CLAD ARCHITECTURAL CABINETS

1.1 QUALITY ASSURANCE

A. Manufacturer's Qualifications: AWI's Quality Certification Program licensed participant.

1.2 PLASTIC-LAMINATE-CLAD CABINETS

A. Architectural Woodwork Standards Grade: Custom.

B. Type of Construction: Frameless.

C. Door and Drawer-Front Style: Flush overlay.

D. Laminate Cladding for Exposed Surfaces:

1. Horizontal Surfaces: Grade HGS.
2. Postformed Surfaces: Grade HGP.
3. Vertical Surfaces: Grade VGS.

E. Materials for Semiexposed Surfaces: Thermoset decorative panels.

1.3 MATERIALS

A. Fire-Retardant-Treated Materials: Where indicated on Drawings.

B. Cabinet Hardware:

1. Hinges: Frameless, concealed.
2. Pulls: Back mounted Wire.
3. Adjustable shelf supports.
4. Locks: Door and drawer.
5. Exposed Hardware Finishes: Satin chromium plated.

END OF SECTION 06 4116

SECTION 07 2100 - THERMAL INSULATION

1.1 MATERIALS

A. Insulation:

1. Extruded Polystyrene Board: Type IV, 25 psi.
2. Glass-Fiber Blanket: Unfaced.

B. Auxiliary Insulating Materials:

1. Insulation fasteners.
2. Adhesive.

END OF SECTION 07 2100

SECTION 07 2119 - FOAMED-IN-PLACE INSULATION

1.1 MATERIALS

A. Closed-Cell Spray Polyurethane Foam: Type II, minimum density of 1.5 lb/cu. ft..

END OF SECTION 07 2119

SECTION 07 2713 - MODIFIED BITUMINOUS SHEET AIR BARRIERS

1.1 QUALITY ASSURANCE

A. Installer Qualifications: Trained and approved by manufacturer and ABAA certified.

1.2 PERFORMANCE REQUIREMENTS

A. Air-Barrier Assembly Air Leakage: Maximum 0.04 cfm/sq. ft. of surface area at 1.57 lbf/sq. ft..

1.3 SELF-ADHERING SHEET AIR BARRIER

A. Modified Bituminous Sheet: 40 mils thick.

B. Air Permeance: Maximum 0.004 cfm/sq. ft. of surface area at 1.57-lbf/sq. ft..

C. Fire Propagation Characteristics: Passes NFPA 285.

D. UV Resistance: Can be exposed to sunlight for 60 days.

1.4 FIELD QUALITY CONTROL

A. ABAA Quality Assurance Program.

END OF SECTION 07 2713

SECTION 07 5423 - THERMOPLASTIC-POLYOLEFIN (TPO) ROOFING

1.1 WARRANTY

A. Manufacturer's Materials and Workmanship Warranty: 20 years.

B. Installer's Warranty: Two years.

1.2 PERFORMANCE REQUIREMENTS

A. Wind Uplift Resistance:

1. Zone 1 (Roof Area Field): See Structural.
2. Zone 2(Roof Area Perimeter): See Structural.
3. Zone 3(Roof Area Corners): See Structural.

B. FM Approvals' RoofNav Listing: Class 1A-60.

C. Cool-Roof Performance: LEED v4.

D. Exterior Fire-Test Exposure: Class A.

1.3 MATERIALS

A. Low-emitting adhesives and sealants.

B. TPO Roofing: ASTM D6878/D6878M, internally fabric- or scrim-reinforced, self-adhering TPO sheet.

1. Thickness: 60 mils, nominal.
2. Color: White.

C. Sheet Flashing: Same as TPO sheet.

D. Roof Insulation: Polyisocyanurate board.

1. Tapered Insulation: 1/4 inch per foot.

E. Cover Board: Glass-mat, water-resistant gypsum substrate.

F. Walkways: Pads or Rolls.

1.4 INSTALLATION

A. Roof Insulation: Mechanically fastened.

B. Membrane Roofing: Adhered.

END OF SECTION 07 5423

SECTION 07 6200 - SHEET METAL FLASHING AND TRIM

1.1 SUSTAINABILITY REQUIREMENTS

1. Recycled content.

1.2 PERFORMANCE REQUIREMENTS

A. Sheet Metal Standard for Flashing and Trim: SMACNA's "Architectural Sheet Metal Manual".

1.3 MATERIALS

A. Sheet Metals:
1. Metallic-Coated Steel Sheet:
a. Coil-Coated Finish: Two-coat fluoropolymer.

B. Underlayment: Self-adhering, high-temperature sheet.

1.4 PRODUCTS

A. Formed Low-Slope Roof Fabrications: Including counterflashing flashing receivers.

B. Formed Wall Fabrications: Including opening flashings in frame construction.

C. Miscellaneous Formed Fabrications.

END OF SECTION 07 6200

SECTION 07 7100 - ROOF SPECIALTIES

1.1 SUSTAINABILITY REQUIREMENTS

1. Recycled content.

1.2 WARRANTY

A. Roofing-System Warranty: Roof specialties included in warranty provisions of roofing Section.

B. Special Warranty on Painted Finishes: 20 years.

1.3 PERFORMANCE REQUIREMENTS

A. Copings: FM Approvals listed.

1. FM Windstorm Classification: Class 1-60.

B. Roof-Edge Flashings: FM Approvals listed.

1. FM Windstorm Classification: Class 1-60.

1.4 PRODUCTS

A. Copings: Zinc-coated (galvanized) steel.

B. Roof-Edge Specialties:

1. Canted Roof-Edge Fascia and Gravel Stop: Zinc-coated (galvanized) steel.

C. Reglets and Counterflashings:

1. Reglets, Embedded: Zinc-coated (galvanized) steel.
2. Counterflashings: Zinc-coated (galvanized) steel.

D. Splash Pans: Formed aluminum.

E. Finishes:

1. Zinc-Coated (Galvanized) Steel: Two-coat fluoropolymer.
2. Stainless Steel: No. 4.

END OF SECTION 07 7100

SECTION 07 7200 - ROOF ACCESSORIES

1.1 WARRANTY

A. Painted Finishes: 20 years.

1.2 PRODUCTS

A. Roof Hatches: Insulated with single-walled curbs.

1. Height: Minimum 12 inches.
2. Hatch Lid: Opaque, single leaf.
3. Material: Zinc-coated (galvanized) steel.
4. Finish: Two-coat fluoropolymer.
5. Accessories: Safety railing system and ladder-assist post.

END OF SECTION 07 7200

SECTION 07 7253 - SNOW GUARDS

1.1 PRODUCTS

A. Seam-Mounted, Rail-Type Snow Guards:

1. One rail with color-matching inserts of material and finish used for metal roofing.

END OF SECTION 07 7253

SECTION 07 8413 - PENETRATION FIRESTOPPING

1.1 QUALITY ASSURANCE

A. Installer Qualifications: FM Global approved or UL qualified.

1.2 SUSTAINABILITY REQUIREMENTS

1. Low-emitting sealants.

1.3 PENETRATION FIRESTOPPING

A. Penetrations in Fire-Resistance-Rated Walls: F-ratings per ASTM E814 or UL 1479.

1.4 INSTALLATION

A. Identification: Walls and penetrations.

1.5 FIELD QUALITY CONTROL

A. Inspection of Installed Firestopping: By Owner-engaged agency according to ASTM E2174.

END OF SECTION 07 8413

SECTION 07 8443 - JOINT FIRESTOPPING

1.1 QUALITY ASSURANCE

A. Installer Qualifications: FM Global approved or UL qualified.

1.2 SUSTAINABILITY REQUIREMENTS

1. Low-emitting sealants.

1.3 FIRE-RESISTIVE JOINT SYSTEMS

A. Joints in or between Fire-Resistance-Rated Construction: ASTM E1966 or UL 2079.

1.4 FIELD QUALITY CONTROL

A. Inspection of Installed Firestopping: By Owner-engaged agency according to ASTM E2393.

END OF SECTION 07 8443

SECTION 07 9200 - JOINT SEALANTS

1.1 PRECONSTRUCTION TESTING

A. Preconstruction field-adhesion testing.

1. Low-emitting sealants.

1.2 WARRANTY

A. Installer Warranty: Two years.

B. Special Manufacturer's Warranty: Five years.

1.3 JOINT SEALANTS

A. Silicone joint sealants.

B. Nonstaining silicone joint sealants.

C. Urethane joint sealants.

D. Mildew-resistant joint sealants.

E. Butyl joint sealants.

F. Latex joint sealants.

G. Joint-sealant backing.

1.4 FIELD QUALITY CONTROL

A. Field-adhesion testing.

1.5 SCHEDULE

A. Exterior joints in horizontal traffic surfaces.

B. Exterior joints in vertical surfaces and horizontal nontraffic surfaces.

C. Interior joints in horizontal traffic surfaces .

D. Interior joints in vertical surfaces and horizontal nontraffic surfaces.

E. Interior joints in vertical surfaces and horizontal nontraffic surfaces not subject to significant movement.

F. Mildew-resistant interior joints in vertical surfaces and horizontal nontraffic surfaces.

G. Concealed mastics.

END OF SECTION 07 9200

SECTION 07 9219 - ACOUSTICAL JOINT SEALANTS

1.1 SUSTAINABILITY REQUIREMENTS

A. Low-emitting sealants.

1.2 WARRANTY

A. Installer Warranty: Two years.

1.3 JOINT SEALANTS

A. Acoustical Sealants for Exposed and Concealed Joints: Latex.

END OF SECTION 07 9219

SECTION 07 9513.13 - INTERIOR EXPANSION JOINT COVER ASSEMBLIES

1.1 FLOOR EXPANSION JOINT COVERS

A. Metal-plate floor joint cover.

1.2 WALL EXPANSION JOINT COVERS

A. Elastomeric-seal wall joint cover.

1.3 CEILING EXPANSION JOINT COVERS

A. Elastomeric-seal ceiling joint cover.

1.4 ACCESSORIES

A. Moisture barriers.

END OF SECTION 07 9513.13

SECTION 07 9513.16 - EXTERIOR EXPANSION JOINT COVER ASSEMBLIES

1.1 EXTERIOR EXPANSION JOINT COVERS

A. Exterior elastomeric-seal joint cover.

1.2 ACCESSORIES

A. Moisture barriers.

END OF SECTION 07 9513.16

SECTION 08 1113 - HOLLOW METAL DOORS AND FRAMES

1.1 SUSTAINABILITY REQUIREMENTS

1. Recycled content.

1.2 PERFORMANCE REQUIREMENTS

A. Fire-rated assemblies.

1.3 INTERIOR STANDARD STEEL DOORS AND FRAMES

A. Heavy-Duty Doors and Frames: SDI A250.8, Level 2.

1. Face: Uncoated steel sheet, minimum thickness of 0.042 inch.
2. Edge Construction: Model 2, Seamless.
3. Core: Manufacturer's standard.
4. Frames: ; steel sheet, minimum thickness of 0.053 inch.
5. Exposed Finish: Prime.

B. EXTERIOR STANDARD STEEL DOORS AND FRAMES

C. Heavy-Duty Doors and Frames: SDI A250.8, Level 2.

1. Face: Metallic-coated steel sheet, minimum thickness of 0.042 inch.
2. Edge Construction: Model 2, Seamless.
3. Core: Polyisocyanurate.
4. Frames Full profile welded; metallic-coated steel sheet, minimum thickness of 0.053 inch.
5. Exposed Finish: Prime.

END OF SECTION 08 1113

SECTION 08 3113 - ACCESS DOORS AND FRAMES

1.1 PRODUCTS

A. Flush access doors and frames with exposed flanges.

1. Material: Stainless steel.

B. Flush access doors and frames with concealed flanges.

1. Material: Steel.

C. Finishes:
1. Steel: Factory primed.
2. Stainless Steel: ASTM A480/A480M No. 4 finish.

END OF SECTION 08 3113

SECTION 08 3323 - OVERHEAD COILING DOORS

PART 1 - GENERAL

1.1 RELATED DOCUMENTS

A. Drawings and general provisions of the Contract, including General and Supplementary Conditions and Division 01 Specification Sections, apply to this Section.

1.2 SUMMARY

A. Section Includes:

1. Insulated and non-insulated service doors.

1.3 ACTION SUBMITTALS

A. Product Data: For each type and size of overhead coiling door and accessory.

1. Include construction details, material descriptions, dimensions of individual components, profiles for slats, and finishes.
2. Include rated capacities, operating characteristics, electrical characteristics, and furnished accessories.
3. Include description of automatic-closing device and testing and resetting instructions.

B. Shop Drawings: For each installation and for special components not dimensioned or detailed in manufacturer's product data.

1. Include plans, elevations, sections, and mounting details.
2. Include details of equipment assemblies, and indicate dimensions, required clearances, method of field assembly, components, and location and size of each field connection.
3. Include points of attachment and their corresponding static and dynamic loads imposed on structure.
4. For exterior components, include details of provisions for assembly expansion and contraction and for excluding and draining moisture to the exterior.
5. Show locations of controls, locking devices, detectors or replaceable fusible links, and other accessories.
6. Include diagrams for power, signal, and control wiring.

C. Samples for Initial Selection: Manufacturer's finish charts showing full range of colors and textures available for units with factory-applied finishes.

1. Include similar Samples of accessories involving color selection.

1.4 INFORMATIONAL SUBMITTALS

A. Qualification Data: For Installer.

B. Sample Warranty: For special warranty.

1.5 CLOSEOUT SUBMITTALS

A. Special warranty.

B. Maintenance Data: For overhead coiling doors to include in maintenance manuals.

1.6 QUALITY ASSURANCE

A. Installer Qualifications: An entity that employs installers and supervisors who are trained and approved by manufacturer for both installation and maintenance of units required for this Project.

1. Maintenance Proximity: Not more than two hours' normal travel time from Installer's place of business to Project site.

1.7 WARRANTY

A. Special Warranty: Manufacturer agrees to repair or replace components of doors that fail in materials or workmanship within specified warranty period.

1. Warranty Period: Two years from date of Substantial Completion.

PART 2 - PRODUCTS

2.1 MANUFACTURERS

A. Source Limitations: Obtain overhead coiling doors from single source from single manufacturer.

1. Obtain operators and controls from overhead coiling-door manufacturer.

2.2 PERFORMANCE REQUIREMENTS

A. Accessibility Standard: Comply with applicable provisions in the USDOJ's "2010 ADA Standards for Accessible Design" and ICC A117.1.

B. Structural Performance, Exterior Doors: Capable of withstanding the following design wind loads:

1. Design Wind Load: As indicated on Drawings.
2. Testing: According to ASTM E330/E330M.
3. Deflection Limits: Design overhead coiling doors to withstand design wind load without evidencing permanent deformation or disengagement of door components.
4. Operability under Wind Load: Design overhead coiling doors to remain operable under design wind load, acting inward and outward.

2.3 DOOR ASSEMBLY – INSULATED

A. Insulated Service Door: Overhead coiling door formed with curtain of interlocking metal slats.

1. Manufacturers: Subject to compliance with requirements, provide products by one of the following:

    a. Clopay Building Products.
    b. Cookson Company.
    c. Cornell.
    d. McKeon Rolling Steel Door Company, Inc.
    e. Overhead Door Corporation.
    f. Raynor.

B. Operation Cycles: Door components and operators capable of operating for not less than 50,000. One operation cycle is complete when a door is opened from the closed position to the fully open position and returned to the closed position.

C. Air Infiltration: Maximum rate of 0.46 cfm/sq. ft. at 15 and 25 mph when tested according to ASTM E283.

D. Curtain R-Value: 8.0 deg F x h x sq. ft./Btu.

E. Door Curtain Material: Galvanized steel.

F. Door Curtain Slats: Flat profile slats of 3 to 3 1/4-inch center-to-center height.

1. Insulated-Slat Interior Facing: Metal.
2. Gasket Seal. Manufacturer's standard continuous gaskets between slats.

G. Insulated Bottom Bar: Reinforced extruded aluminum interior face with full depth insulation and exterior skin slat to match curtain material and gauge. Minimum 4” tall x 1-1/16” thickness.

H. Curtain Jamb Guides: Galvanized steel with exposed finish matching curtain slats.

1. Provide manufacturer’s standard thermal break.

I. Hood: Match curtain material and finish.

1. Shape: Round or square as standard with manufacturer.
2. Mounting: As indicated on Drawings.

J. Locking Devices: Equip door with locking device assembly.

1. Locking Device Assembly: Cremone-type, both jamb sides locking bars, operable from inside and outside with cylinders.

K. Electric Door Operator:

1. Usage Classification: Standard duty, up to 25 cycles per hour and up to 90 cycles per day.
2. Operator Location: Top of hood or Front of hood.
3. Safety: Listed according to UL 325 by a qualified testing agency for commercial or industrial use; moving parts of operator enclosed or guarded if exposed and mounted at 8 feet or lower.
4. Motor Exposure: Exterior, wet, and humid.
5. Motor Electrical Characteristics:

    a. Horsepower:: 1/2 hp.
    b. Voltage: 115-V ac, single phase, 60 Hz.

6. Emergency Manual Operation:: Push-up type.

7. Obstruction-Detection Device: Automatic electric sensor edge on bottom bar.
8. Control Station(s): Interior mounted and exterior mounted where indicated on Drawings.

L. Curtain Accessories: Equip door with weatherseals and push/pull handles.

M. Door Finish:

1. Baked-Enamel or Powder-Coated Finish: Color as selected by Architect from manufacturer's full range.
2. Interior Curtain-Slat Facing: Match finish of exterior curtain-slat face.

2.4 DOOR ASSEMBLY – NON-INSULATED, STAINLESS

A. Service Door: Overhead coiling door formed with curtain of interlocking metal slats.

1. Manufacturers: Subject to compliance with requirements, provide products by one of the following:

a. Clopay Building Products.
b. Cookson Company.
c. Cornell.
d. McKeon Rolling Steel Door Company, Inc.
e. Overhead Door Corporation.
f. Raynor.

B. Operation Cycles: Door components and operators capable of operating for not less than 50,000. One operation cycle is complete when a door is opened from the closed position to the fully open position and returned to the closed position.

C. Door Curtain Material: Stainless steel.

D. Door Curtain Slats: Flat profile slats of 3 to 3-1/4-inch center-to-center height.

E. Curtain Jamb Guides: Stainless steel with exposed finish matching curtain slats.

F. Hood: Stainless steel.

1. Shape: Round or square as standard with manufacturer.
2. Mounting: As indicated on Drawings.

G. Locking Devices: Equip door with locking device assembly.

1. Locking Device Assembly: Cremone-type, both jamb sides locking bars, operable from inside and outside with cylinders.

H. Electric Door Operator:

1. Usage Classification: Standard duty, up to 25 cycles per hour and up to 90 cycles per day.
2. Operator Location: Top of hood or front of hood.

3. Safety: Listed according to UL 325 by a qualified testing agency for commercial or industrial use; moving parts of operator enclosed or guarded if exposed and mounted at 8 ft. or lower.
4. Motor Exposure: Interior.
5. Motor Electrical Characteristics:

    a. Horsepower: 1/2 hp.
    b. Voltage: 115 V ac, single phase, 60 Hz.

6. Emergency Manual Operation: Push-up type.
7. Obstruction-Detection Device: Automatic electric sensor edge on bottom bar.
8. Control Station(s): Interior mounted where indicated on Drawings.

I. Curtain Accessories: Equip door with push/pull handles.

J. Door Finish:

1. Stainless Steel Finish: ASTM A480/A480M No. 4 (polished directional satin).
2. Interior Curtain-Slat Facing: Match finish of exterior curtain-slat face.

2.5 MATERIALS, GENERAL

A. Electrical Components, Devices, and Accessories: Listed and labeled as defined in NFPA 70, by a qualified testing agency, and marked for intended location and application.

2.6 DOOR CURTAIN MATERIALS AND CONSTRUCTION

A. Door Curtains: Fabricate overhead coiling-door curtain of interlocking metal slats, designed to withstand wind loading indicated, in a continuous length for width of door without splices. Unless otherwise indicated, provide slats of thickness and mechanical properties recommended by door manufacturer for performance, size, and type of door indicated, and as follows:

1. Steel Door Curtain Slats: Zinc-coated (galvanized), cold-rolled structural-steel sheet; complying with ASTM A653/A653M, with G90 zinc coating; nominal sheet thickness (coated) of 0.028 inch; and as required.
2. Stainless Steel Door Curtain Slats: ASTM A666, Type 304; sheet thickness of 0.025 inch; and as required.
3. Insulation: Fill slats for insulated doors with manufacturer's standard thermal insulation complying with maximum flame-spread and smoke-developed indexes of 75 and 450, respectively, according to ASTM E84 or UL 723. Enclose insulation completely within slat faces.
4. Metal Interior Curtain-Slat Facing: Match metal of exterior curtain-slat face, with minimum steel thickness of 0.010 inch.

B. Curtain Jamb Guides: Manufacturer's standard angles or channels and angles of same material and finish as curtain slats unless otherwise indicated, with sufficient depth and strength to retain curtain, to allow curtain to operate smoothly, and to withstand loading. Slot bolt holes for guide adjustment. Provide removable stops on guides to prevent overtravel of curtain, and a continuous bar for holding windlocks.

2.7 HOODS

A. General: Form sheet metal hood to entirely enclose coiled curtain and operating mechanism at opening head. Contour to fit end brackets to which hood is attached. Roll and reinforce top and bottom edges for stiffness. Form closed ends for surface-mounted hoods and fascia for any portion of between-jamb mounting that projects beyond wall face. Equip hood with intermediate support brackets as required to prevent sagging.

1. Galvanized Steel: Nominal 0.028-inch- thick, hot-dip galvanized-steel sheet with G90 zinc coating, complying with ASTM A653/A653M.
2. Stainless Steel: 0.025-inch- thick, stainless steel sheet, Type 304, complying with ASTM A666.

2.8 LOCKING DEVICES

A. Locking Device Assembly: Fabricate with cylinder lock, spring-loaded dead bolt, operating handle, cam plate, and adjustable locking bars to engage through slots in tracks.

1. Lock Cylinders: As specified in Section 087100 "Door Hardware" and keyed to building keying system.

2.9 CURTAIN ACCESSORIES

A. Weatherseals for Exterior Doors: Equip each exterior door with weather-stripping gaskets fitted to entire exterior perimeter of door for a weather-resistant installation unless otherwise indicated.

1. At door head, use 1/8-inch- thick, replaceable, continuous-sheet baffle secured to inside of hood or field-installed on the header.
2. At door jambs, use replaceable, adjustable, continuous, flexible, 1/8-inch- thick seals of flexible vinyl, rubber, or neoprene.

B. Push/Pull Handles: Equip each push-up-operated or emergency-operated door with lifting handles on each side of door, finished to match door.

2.10 COUNTERBALANCE MECHANISM

A. General: Counterbalance doors by means of manufacturer's standard mechanism with an adjustable-tension, steel helical torsion spring mounted around a steel shaft and contained in a spring barrel connected to top of curtain with barrel rings. Use grease-sealed bearings or self-lubricating graphite bearings for rotating members.

B. Counterbalance Barrel: Fabricate spring barrel of manufacturer's standard hot-formed, structural-quality, seamless carbon-steel pipe, of sufficient diameter and wall thickness to support rolled-up curtain without distortion of slats and to limit barrel deflection to not more than 0.03 in./ft. of span under full load.

C. Counterbalance Spring: One or more oil-tempered, heat-treated steel helical torsion springs. Size springs to counterbalance weight of curtain, with uniform adjustment accessible from outside barrel. Secure ends of springs to barrel and shaft with cast-steel barrel plugs.

D. Torsion Rod for Counterbalance Shaft: Fabricate of manufacturer's standard cold-rolled steel, sized to hold fixed spring ends and carry torsional load.

E. Brackets: Manufacturer's standard mounting brackets of either cast iron or cold-rolled steel plate.

2.11 ELECTRIC DOOR OPERATORS

A. General: Electric door operator assembly of size and capacity recommended and provided by door manufacturer for door and operation-cycles requirement specified, with electric motor and factory-prewired motor controls, starter, gear-reduction unit, solenoid-operated brake, clutch, control stations, control devices, integral gearing for locking door, and accessories required for proper operation.

1. Comply with NFPA 70.
2. Control equipment complying with NEMA ICS 1, NEMA ICS 2, and NEMA ICS 6, with NFPA 70 Class 2 control circuit, maximum 24-V ac or dc.

B. Usage Classification: Electric operator and components capable of operating for not less than number of cycles per hour indicated for each door.

C. Door Operator Location(s): Operator location indicated for each door.

1. Top-of-Hood Mounted: Operator is mounted to the right or left door head plate with the operator on top of the door-hood assembly and connected to the door drive shaft with drive chain and sprockets. Headroom is required for this type of mounting.
2. Front-of-Hood Mounted: Operator is mounted to the right or left door head plate with the operator on coil side of the door-hood assembly and connected to the door drive shaft with drive chain and sprockets. Front clearance is required for this type of mounting.

D. Motors: Reversible-type motor with controller (disconnect switch) for motor exposure indicated for each door assembly.

1. Electrical Characteristics: Minimum as indicated for each door assembly. If not indicated, large enough to start, accelerate, and operate door at an opening speed not less than 80 in./sec. and closing speed not less than 20 in./sec. , without exceeding nameplate ratings or service factor.
2. Operating Controls, Controllers, Disconnect Switches, Wiring Devices, and Wiring: Manufacturer's standard unless otherwise indicated.
3. Coordinate wiring requirements and electrical characteristics of motors and other electrical devices with building electrical system and each location where installed.

E. Limit Switches: Equip each motorized door with adjustable switches interlocked with motor controls and set to automatically stop door at fully opened and fully closed positions.

F. Obstruction-Detection Devices: External entrapment protection consisting of indicated automatic safety sensor capable of protecting full width of door opening.

1. Electric Sensor Edge: Automatic safety sensor edge, located within astragal or weather stripping mounted to bottom bar. Contact with sensor activates device. Connect to control circuit using manufacturer's standard take-up reel or self-coiling cable.

a. Self-Monitoring Type: Designed to interface with door operator control circuit to detect damage to or disconnection of sensor edge.

G. Control Station: Three-button control station in fixed location with momentary-contact push-button controls labeled "Open" and "Stop" and sustained- or constant-pressure push-button control labeled "Close."

1. Interior-Mounted Units: Full-guarded, surface-mounted, heavy-duty type, with general-purpose NEMA ICS 6, Type 1 enclosure, key operated.

a. Provide key operated switch compatible with cylinders specified in Section 087100 “Door Hardware”
b. Locate control station on inside only, supplied by overhead door supplier. Refer to the Electrical Drawings.

H. Emergency Manual Operation: Equip each electrically powered door with capability for emergency manual operation. Design manual mechanism so required force for door operation does not exceed 25 lbf.

I. Emergency Operation Disconnect Device: Equip operator with hand-operated disconnect mechanism for automatically engaging manual operator and releasing brake for emergency manual operation while disconnecting motor without affecting timing of limit switch. Mount mechanism so it is accessible from floor level. Include interlock device to automatically prevent motor from operating when emergency operator is engaged.

J. Motor Removal: Design operator so motor may be removed without disturbing limit-switch adjustment and without affecting emergency manual operation.

2.12 GENERAL FINISH REQUIREMENTS

A. Comply with NAAMM/NOMMA 500 for recommendations for applying and designating finishes.

B. Appearance of Finished Work: Noticeable variations in same piece are not acceptable. Variations in appearance of adjoining components are acceptable if they are within the range of approved Samples and are assembled or installed to minimize contrast.

2.13 STEEL AND GALVANIZED-STEEL FINISHES

A. Baked-Enamel or Powder-Coat Finish: Manufacturer's standard baked-on finish consisting of prime coat and thermosetting topcoat. Comply with coating manufacturer's written instructions for cleaning, pretreatment, application, and minimum dry film thickness.

2.14 STAINLESS STEEL FINISHES

A. Surface Preparation: Remove tool and die marks and stretch lines, or blend into finish.

B. Polished Finishes: Grind and polish surfaces to produce uniform finish, free of cross scratches.

1. Run grain of directional finishes with long dimension of each piece.
2. When polishing is completed, passivate and rinse surfaces. Remove embedded foreign matter and leave surfaces chemically clean.
3. Directional Satin Finish: ASTM A480/A480M No. 4.

PART 3 - EXECUTION

3.1 EXAMINATION

A. Examine substrates areas and conditions, with Installer present, for compliance with requirements for substrate construction and other conditions affecting performance of the Work.

B. Examine locations of electrical connections.

C. Proceed with installation only after unsatisfactory conditions have been corrected.

3.2 INSTALLATION

A. Install overhead coiling doors and operating equipment complete with necessary hardware, anchors, inserts, hangers, and equipment supports; according to manufacturer's written instructions and as specified.

B. Install overhead coiling doors, hoods, controls, and operators at the mounting locations indicated for each door.

C. Accessibility: Install overhead coiling doors, switches, and controls along accessible routes in compliance with the accessibility standard.

D. Power-Operated Doors: Install according to UL 325.

3.3 STARTUP SERVICE

A. Engage a factory-authorized service representative to perform startup service.

1. Complete installation and startup checks according to manufacturer's written instructions.
2. After electrical circuitry has been energized, operate doors to confirm proper motor rotation and door performance.
3. Test and adjust controls and safety devices. Replace damaged and malfunctioning controls and equipment.

3.4 ADJUSTING

A. Adjust hardware and moving parts to function smoothly so that doors operate easily, free of warp, twist, or distortion.

1. Adjust exterior doors and components to be weather resistant.

B. Lubricate bearings and sliding parts as recommended by manufacturer.

C. Adjust seals to provide tight fit around entire perimeter.

3.5 DEMONSTRATION

A. Engage a factory-authorized service representative to train Owner's maintenance personnel to adjust, operate, and maintain overhead coiling doors.

END OF SECTION 08 3323

SECTION 08 4113 - ALUMINUM-FRAMED ENTRANCES AND STOREFRONTS

PART 1 - GENERAL

1.1 RELATED DOCUMENTS

A. Drawings and general provisions of the Contract, including General and Supplementary Conditions and Division 01 Specification Sections, apply to this Section.

1.2 SUMMARY

A. Section Includes:

1. Storefront framing.
2. Manual-swing entrance doors.

B. Related Requirements:

1.3 ACTION SUBMITTALS

A. Product Data: For each type of product.

1. Include construction details, material descriptions, dimensions of individual components and profiles, and finishes.

B. Sustainable Design Submittals:

1. Product Data: For sealants, indicating VOC content.
2. Product Data: For recycled content, indicating postconsumer and preconsumer recycled content and cost.

C. Shop Drawings: For aluminum-framed entrances and storefronts. Include plans, elevations, sections, full-size details, and attachments to other work.

1. Include details of provisions for assembly expansion and contraction and for draining moisture occurring within the assembly to the exterior.
2. Include full-size isometric details of each type of vertical-to-horizontal intersection of aluminum-framed entrances and storefronts, showing the following:

a. Joinery, including concealed welds.
b. Anchorage.
c. Expansion provisions.
d. Glazing.
e. Flashing and drainage.

3. Show connection to and continuity with adjacent thermal, weather, air, and vapor barriers.
4. Include point-to-point wiring diagrams showing the following:

a. Power requirements for each electrically operated door hardware.

b. Location and types of switches, signal device, conduit sizes, and number and size of wires.

D. Samples for Initial Selection: For units with factory-applied color finishes.

E. Delegated-Design Submittal: For aluminum-framed entrances and storefronts indicated to comply with performance requirements and design criteria, including analysis data signed and sealed by the qualified professional engineer responsible for their preparation.

1.4 INFORMATIONAL SUBMITTALS

A. Qualification Data: For Installer.

B. Energy Performance Certificates: For aluminum-framed entrances and storefronts, accessories, and components, from manufacturer.

1. Basis for Certification: NFRC-certified energy performance values for each aluminum-framed entrance and storefront.

C. Product Test Reports: For aluminum-framed entrances and storefronts, for tests performed by manufacturer and witnessed by a qualified testing agency.

D. Sample Warranties: For special warranties.

1.5 CLOSEOUT SUBMITTALS

A. Maintenance Data: For aluminum-framed entrances and storefronts to include in maintenance manuals.

1.6 QUALITY ASSURANCE

A. Installer Qualifications: An entity that employs installers and supervisors who are trained and approved by manufacturer.

B. Product Options: Information on Drawings and in Specifications establishes requirements for aesthetic effects and performance characteristics of assemblies. Aesthetic effects are indicated by dimensions, arrangements, alignment, and profiles of components and assemblies as they relate to sightlines, to one another, and to adjoining construction.

1. Do not change intended aesthetic effects, as judged solely by Architect, except with Architect's approval. If changes are proposed, submit comprehensive explanatory data to Architect for review.

1.7 WARRANTY

A. Special Warranty: Installer agrees to repair or replace components of aluminum-framed entrances and storefronts that do not comply with requirements or that fail in materials or workmanship within specified warranty period.

1. Failures include, but are not limited to, the following:

a. Structural failures, including, but not limited to, excessive deflection.
b. Noise or vibration created by wind and thermal and structural movements.
c. Deterioration of metals, metal finishes, and other materials beyond normal weathering.
d. Water penetration through fixed glazing and framing areas.
e. Failure of operating components.

2. Warranty Period: Two years from date of Substantial Completion.

B. Special Finish Warranty, Anodized Finishes: Standard form in which manufacturer agrees to repair finishes or replace aluminum that shows evidence of deterioration of anodized finishes within specified warranty period.

1. Deterioration includes, but is not limited to, the following:

a. Color fading more than 5 Delta E units when tested according to ASTM D2244.
b. Chalking in excess of a No. 8 rating when tested according to ASTM D4214.
c. Cracking, peeling, or chipping.

2. Warranty Period: 10 years from date of Substantial Completion.

PART 2 - PRODUCTS

2.1 MANUFACTURERS

A. Source Limitations: Obtain all components of aluminum-framed entrance and storefront system, including framing and accessories, from single manufacturer.

2.2 PERFORMANCE REQUIREMENTS

A. Delegated Design: Engage a qualified professional engineer, as defined in Section 014000 "Quality Requirements," to design aluminum-framed entrances and storefronts.

B. General Performance: Comply with performance requirements specified, as determined by testing of aluminum-framed entrances and storefronts representing those indicated for this Project without failure due to defective manufacture, fabrication, installation, or other defects in construction.

1. Aluminum-framed entrances and storefronts shall withstand movements of supporting structure, including, but not limited to, twist, column shortening, long-term creep, and deflection from uniformly distributed and concentrated live loads.
2. Failure also includes the following:

a. Thermal stresses transferring to building structure.
b. Glass breakage.
c. Noise or vibration created by wind and thermal and structural movements.
d. Loosening or weakening of fasteners, attachments, and other components.
e. Failure of operating units.

C. Structural Loads:

1. Wind Loads: As indicated on Drawings.
2. Other Design Loads: As indicated on Drawings.

D. Deflection of Framing Members: At design wind pressure, as follows:

1. Deflection Normal to Wall Plane: Limited to edge of glass in a direction perpendicular to glass plane not exceeding 1/175 of the glass edge length for each individual glazing lite or an amount that restricts edge deflection of individual glazing lites to 3/4 inch (19.1 mm), whichever is less.
2. Deflection Parallel to Glazing Plane: Limited to 1/360 of clear span or 1/8 inch (3.2 mm), whichever is smaller.
3.

E. Air Infiltration: Test according to ASTM E283 for infiltration as follows:

1. Fixed Framing and Glass Area:

a. Maximum air leakage of 0.06 cfm/sq. ft. at a static-air-pressure differential of 1.57 lbf/sq. ft..

2. Entrance Doors:

a. Single Doors: Maximum air leakage of 0.5 cfm/sq. ft. at a static-air-pressure differential of 1.57 lbf/sq. ft..

F. Water Penetration under Static Pressure: Test according to ASTM E331 as follows:

1. No evidence of water penetration through fixed glazing and framing areas, including entrance doors, when tested according to a minimum static-air-pressure differential of 20 percent of positive wind-load design pressure, but not less than 6.24 lbf/sq. ft..

G. Energy Performance: Certify and label energy performance according to NFRC as follows:

1. Thermal Transmittance (U-factor): Fixed glazing and framing areas as a system shall have U-factor of not more than 0.38 Btu/sq. ft. x h x deg F as determined according to NFRC 100.
2. Solar Heat Gain Coefficient (SHGC): Fixed glazing and framing areas as a system shall have SHGC of no greater than 0.40 as determined according to NFRC 200.

H. Thermal Movements: Allow for thermal movements resulting from ambient and surface temperature changes.

1. Temperature Change: 120 deg F, ambient; 180 deg F, material surfaces.
2. Thermal Cycling: No buckling; stress on glass; sealant failure; excess stress on framing, anchors, and fasteners; or reduction of performance when tested according to AAMA 501.5.

a. High Exterior Ambient-Air Temperature: That which produces an exterior metal-surface temperature of 180 deg F.
b. Low Exterior Ambient-Air Temperature: 0 deg F.
c. Interior Ambient-Air Temperature: 75 deg F.

2.3 STOREFRONT SYSTEMS

A. Manufacturers: Subject to compliance with requirements, provide products by one of the following:

1. EFCO Corporation.
2. Kawneer North America, an Arconic company.
3. Oldcastle BuildingEnvelope (OBE); CRH Americas.
4. Trulite Glass & Aluminum Solutions, LLC.
5. Tubelite Inc.
6. U.S. Aluminum; a brand of C.R. Laurence.
7. YKK AP America Inc.

B. Framing Members: Manufacturer's extrudedframing members of thickness required and reinforced as required to support imposed loads.

1. Exterior Framing Construction: Thermally broken.
2. Interior Vestibule Framing Construction: Nonthermal.
3. Glazing System: Retained mechanically with gaskets on four sides.
4. Glazing Plane: Front.
5. Finish: High-performance organic finish.
6. Aluminum: Alloy and temper recommended by manufacturer for type of use and finish indicated.
7. Steel Reinforcement: As required by manufacturer.

C. Backer Plates: Manufacturer's standard, continuous backer plates for framing members, if not integral, where framing abuts adjacent construction.

D. Brackets and Reinforcements: Manufacturer's standard high-strength aluminum with nonstaining, nonferrous shims for aligning system components.

2.4 ENTRANCE DOOR SYSTEMS

A. Manufacturers: Subject to compliance with requirements, provide products by one of the following:

1. EFCO Corporation.
2. Kawneer North America, an Arconic company.
3. Oldcastle BuildingEnvelope (OBE); CRH Americas.
4. Trulite Glass & Aluminum Solutions, LLC.
5. Tubelite Inc.
6. U.S. Aluminum; a brand of C.R. Laurence.
7. YKK AP America Inc.

B. Entrance Doors: Manufacturer's standard glazed entrance doors for manual-swing or automatic operation.

1. Door Construction: 1-3/4-inch overall thickness, with minimum 0.125-inch- thick, extruded-aluminum tubular rail and stile members. Mechanically fasten corners with reinforcing brackets that are deeply penetrated and fillet welded or that incorporate concealed tie rods.

2. Door Design: As indicated.

3. Glazing Stops and Gaskets: Square, snap-on, extruded-aluminum stops and preformed gaskets.

    a. Provide non-removable glazing stops on outside of door.

2.5 ENTRANCE DOOR HARDWARE

A. Entrance Door Hardware: Hardware not specified in this Section is specified in Section 087100 "Door Hardware."

B. Weather Stripping: Manufacturer's standard replaceable components.

1. Compression Type: Made of ASTM D2000 molded neoprene.
2. Sliding Type: AAMA 701/702, made of wool, polypropylene, or nylon woven pile with nylon-fabric or aluminum-strip backing.

2.6 GLAZING

A. Glazing: Comply with Section 08 8000 "Glazing."

B. Glazing Gaskets: Manufacturer's standard sealed-corner pressure-glazing system of black, resilient elastomeric glazing gaskets, setting blocks, and shims or spacers.

C. Glazing Sealants: Comply with Section 088000 "Glazing."

1. Verify sealant has a VOC content of 250 g/L or less.

D. Weatherseal Sealants: ASTM C920 for Type S; Grade NS; Class 25; Uses NT, G, A, and O; chemically curing silicone formulation that is compatible with structural sealant and other system components with which it comes in contact; recommended by structural-sealant, weatherseal-sealant, and structural-sealant-glazed storefront manufacturers for this use.

2.7 MATERIALS

A. Extruded Bars, Rods, Profiles, and Tubes: ASTM B221.

B. Structural Profiles: ASTM B308/B308M.

C. Steel Reinforcement:

1. Structural Shapes, Plates, and Bars: ASTM A36/A36M.
2. Cold-Rolled Sheet and Strip: ASTM A1008/A1008M.
3. Hot-Rolled Sheet and Strip: ASTM A1011/A1011M.
4. Primer: Manufacturer's standard zinc-rich, corrosion-resistant primer complying with SSPC-PS Guide No. 12.00; applied immediately after surface preparation and pretreatment. Select surface preparation methods according to recommendations in SSPC-SP COM, and prepare surfaces according to applicable SSPC standard.

D. Recycled Content of Aluminum Components: Postconsumer recycled content plus one-half of preconsumer recycled content not less than 25 percent.

2.8 ACCESSORIES

A. Fasteners and Accessories: Manufacturer's standard corrosion-resistant, nonstaining, nonbleeding fasteners and accessories compatible with adjacent materials.

1. Use self-locking devices where fasteners are subject to loosening or turning out from thermal and structural movements, wind loads, or vibration.
2. Reinforce members as required to receive fastener threads.
3. Use exposed fasteners with countersunk Phillips screw heads, finished to match framing system.

B. Anchors: Three-way adjustable anchors with minimum adjustment of 1 inch that accommodate fabrication and installation tolerances in material and finish compatible with adjoining materials and recommended by manufacturer.

1. Concrete and Masonry Inserts: Hot-dip galvanized cast-iron, malleable-iron, or steel inserts complying with ASTM A123/A123M or ASTM A153/A153M requirements.

C. Concealed Flashing: Manufacturer's standard corrosion-resistant, nonstaining, nonbleeding flashing compatible with adjacent materials.

D. Bituminous Paint: Cold-applied asphalt-mastic paint containing no asbestos, formulated for 30-mil thickness per coat.

E. Rigid PVC Filler.

2.9 FABRICATION

A. Form or extrude aluminum shapes before finishing.

B. Weld in concealed locations to greatest extent possible to minimize distortion or discoloration of finish. Remove weld spatter and welding oxides from exposed surfaces by descaling or grinding.

C. Fabricate components that, when assembled, have the following characteristics:

1. Profiles that are sharp, straight, and free of defects or deformations.
2. Accurately fitted joints with ends coped or mitered.
3. Physical and thermal isolation of glazing from framing members.
4. Accommodations for thermal and mechanical movements of glazing and framing to maintain required glazing edge clearances.
5. Provisions for field replacement of glazing from interior for vision glass and exterior for spandrel glazing or metal panels.
6. Fasteners, anchors, and connection devices that are concealed from view to greatest extent possible.

D. Mechanically Glazed Framing Members: Fabricate for flush glazing without projecting stops.

E. Storefront Framing: Fabricate components for assembly using screw-spline system.

F. Entrance Door Frames: Reinforce as required to support loads imposed by door operation and for installing entrance door hardware.

1. At interior and exterior doors, provide compression weather stripping at fixed stops.

G. Entrance Doors: Reinforce doors as required for installing entrance door hardware.

1. At pairs of exterior doors, provide sliding-type weather stripping retained in adjustable strip and mortised into door edge.

H. Entrance Door Hardware Installation: Factory install entrance door hardware to the greatest extent possible. Cut, drill, and tap for factory-installed entrance door hardware before applying finishes.

I. After fabrication, clearly mark components to identify their locations in Project according to Shop Drawings.

2.10 ALUMINUM FINISHES

A. Clear Anodic Finish: AAMA 611, AA-M12C22A41, Class I, 0.018 mm or thicker.

2.11 SOURCE QUALITY CONTROL

A. Structural Sealant: Perform quality-control procedures complying with ASTM C1401 recommendations, including, but not limited to, assembly material qualification procedures, sealant testing, and assembly fabrication reviews and checks.

PART 3 - EXECUTION

3.1 EXAMINATION

A. Examine areas, with Installer present, for compliance with requirements for installation tolerances and other conditions affecting performance of the Work.

B. Proceed with installation only after unsatisfactory conditions have been corrected.

3.2 PREPARATION

A. Prepare surfaces that are in contact with structural sealant according to sealant manufacturer's written instructions, to ensure compatibility and adhesion. Preparation includes, but is not limited to, cleaning and priming surfaces.

3.3 INSTALLATION

A. General:

1. Comply with manufacturer's written instructions.
2. Do not install damaged components.
3. Fit joints to produce hairline joints free of burrs and distortion.
4. Rigidly secure nonmovement joints.
5. Install anchors with separators and isolators to prevent metal corrosion and electrolytic deterioration and to prevent impeding movement of moving joints.
6. Seal perimeter and other joints watertight unless otherwise indicated.

B. Metal Protection:

1. Where aluminum is in contact with dissimilar metals, protect against galvanic action by painting contact surfaces with materials recommended by manufacturer for this purpose or by installing nonconductive spacers.
2. Where aluminum is in contact with concrete or masonry, protect against corrosion by painting contact surfaces with bituminous paint.

C. Set continuous sill members and flashing in full sealant bed, as specified in Section 07 9200 "Joint Sealants," to produce weathertight installation.

D. Install components plumb and true in alignment with established lines and grades.

E. Install operable units level and plumb, securely anchored, and without distortion. Adjust weather-stripping contact and hardware movement to produce proper operation.

F. Install glazing as specified in Section 08 8000 "Glazing."

G. Install weatherseal sealant according to Section 07 9200 "Joint Sealants" and according to sealant manufacturer's written instructions to produce weatherproof joints. Install joint filler behind sealant as recommended by sealant manufacturer.

H. Entrance Doors: Install doors to produce smooth operation and tight fit at contact points.

1. Exterior Doors: Install to produce weathertight enclosure and tight fit at weather stripping.
2. Field-Installed Entrance Door Hardware: Install surface-mounted entrance door hardware according to entrance door hardware manufacturers' written instructions using concealed fasteners to greatest extent possible.

3.4 ERECTION TOLERANCES

A. Erection Tolerances: Install aluminum-framed entrances and storefronts to comply with the following maximum tolerances:

1. Plumb: 1/8 inch in 10 feet; 1/4 inch in 40 feet.
2. Level: 1/8 inch in 20 feet; 1/4 inch in 40 feet.
3. Alignment:

a. Where surfaces abut in line or are separated by reveal or protruding element up to 1/2 inch wide, limit offset from true alignment to 1/16 inch.
b. Where surfaces are separated by reveal or protruding element from 1/2 to 1 inch wide, limit offset from true alignment to 1/8 inch.
c. Where surfaces are separated by reveal or protruding element of 1 inch wide or more, limit offset from true alignment to 1/4 inch.

4. Location: Limit variation from plane to 1/8 inch in 12 feet; 1/2 inch over total length.

3.5 FIELD QUALITY CONTROL

A. Field Quality-Control Testing: Perform the following test on representative areas of aluminum-framed entrances and storefronts.

1. Water-Spray Test: Before installation of interior finishes has begun, areas designated by Architect shall be tested according to AAMA 501.2 and shall not evidence water penetration.

    a. Perform a minimum of two tests in areas as directed by Architect.
    b. Perform tests in each test area as directed by Architect. Perform at least three tests, prior to 70 percent completion.

2. Water Penetration: ASTM E1105 at a minimum uniform static-air-pressure differential of 0.67 times the static-air-pressure differential specified for laboratory testing in "Performance Requirements" Article, but not less than 6.24 lbf/sq. ft. (300 Pa), and shall not evidence water penetration.

B. Aluminum-framed entrances and storefronts will be considered defective if they do not pass tests and inspections.

C. Prepare test and inspection reports.

END OF SECTION 08 4113

SECTION 08 4413 - GLAZED ALUMINUM CURTAIN WALLS

PART 1 - GENERAL

1.1 RELATED DOCUMENTS

A. Drawings and general provisions of the Contract, including General and Supplementary Conditions and Division 01 Specification Sections, apply to this Section.

1.2 SUMMARY

A. Section Includes:

1. Conventionally glazed aluminum curtain walls.

B. Related Requirements:
1. Section 07 9200 "Joint Sealants" for installation of joint sealants installed with glazed aluminum curtain walls and for sealants to the extent not specified in this Section.
2. Section 08 8000 "Glazing" for curtain wall glazing.

1.3 ACTION SUBMITTALS

A. Product Data: For each type of product.

1. Include construction details, material descriptions, dimensions of individual components and profiles, and finishes.

B. Shop Drawings: For glazed aluminum curtain walls. Include plans, elevations, sections, full-size details, and attachments to other work.

1. Include details of provisions for assembly expansion and contraction and for draining moisture occurring within the assembly to the exterior.
2. Include full-size isometric details of each type of vertical-to-horizontal intersection of glazed aluminum curtain walls, showing the following:

a. Joinery, including concealed welds.
b. Anchorage.
c. Expansion provisions.
d. Glazing.
e. Flashing and drainage.

3. Show connection to and continuity with adjacent thermal, weather, air, and vapor barriers.

C. Samples for Initial Selection: For units with factory-applied color finishes.

D. Delegated-Design Submittal: For glazed aluminum curtain walls, including analysis data signed and sealed by the qualified professional engineer responsible for their preparation.

1.4 INFORMATIONAL SUBMITTALS

A. Qualification Data:

1. For Installer.
2. For professional engineer's experience with providing delegated-design engineering services of the kind indicated, including documentation that engineer is licensed in the state in which Project is located.

B. Energy Performance Certificates: For glazed aluminum curtain walls, accessories, and components from manufacturer.

1. Basis for Certification: NFRC-certified energy performance values for each glazed aluminum curtain wall.

C. Product Test Reports: For glazed aluminum curtain walls, for tests performed by manufacturer and witnessed by a qualified testing agency.

D. Field quality-control reports.

E. Sample Warranties: For special warranties.

1.5 CLOSEOUT SUBMITTALS

A. Maintenance Data: For glazed aluminum curtain walls to include in maintenance manuals.

1.6 QUALITY ASSURANCE

A. Installer Qualifications: An entity that employs installers and supervisors who are trained and approved by manufacturer.

B. Testing Agency Qualifications: Qualified according to ASTM E699 for testing indicated and accredited by IAS or ILAC Mutual Recognition Arrangement as complying with ISO/IEC 17025 and accredited by AAMA-certified laboratory and acceptable to Owner and Architect.

C. Product Options: Information on Drawings and in Specifications establishes requirements for aesthetic effects and performance characteristics of assemblies. Aesthetic effects are indicated by dimensions, arrangements, alignment, and profiles of components and assemblies as they relate to sightlines, to one another, and to adjoining construction.

1. Do not change intended aesthetic effects, as judged solely by Architect, except with Architect's approval. If changes are proposed, submit comprehensive explanatory data to Architect for review.

1.7 WARRANTY

A. Special Assembly Warranty: Installer agrees to repair or replace components of glazed aluminum curtain wall that do not comply with requirements or that fail in materials or workmanship within specified warranty period.

1. Failures include, but are not limited to, the following:

a. Structural failures including, but not limited to, excessive deflection.
b. Noise or vibration created by wind and thermal and structural movements.
c. Deterioration of metals, metal finishes, and other materials beyond normal weathering.
d. Water penetration through fixed glazing and framing areas.
e. Failure of operating components.

2. Warranty Period: Two years from date of Substantial Completion.

B. Special Finish Warranty, Anodized Finishes: Standard form in which manufacturer agrees to repair finishes or replace aluminum that shows evidence of deterioration of anodized finishes within specified warranty period.

1. Deterioration includes, but is not limited to, the following:

a. Color fading more than 5 Delta E units when tested according to ASTM D2244.
b. Chalking in excess of a No. 8 rating when tested according to ASTM D4214.
c. Cracking, peeling, or chipping.

2. Warranty Period: 10 years from date of Substantial Completion.

PART 2 - PRODUCTS

2.1 PERFORMANCE REQUIREMENTS

A. Delegated Design: Engage a qualified professional engineer, as defined in Section 01 4000 "Quality Requirements," to design glazed aluminum curtain walls.

B. General Performance: Comply with performance requirements specified, as determined by testing of glazed aluminum curtain walls representing those indicated for this Project without failure due to defective manufacture, fabrication, installation, or other defects in construction.

1. Glazed aluminum curtain walls shall withstand movements of supporting structure, including, but not limited to, story drift, twist, column shortening, long-term creep, and deflection from uniformly distributed and concentrated live loads.
2. Failure also includes the following:

a. Thermal stresses transferring to building structure.
b. Glass breakage.
c. Noise or vibration created by wind and thermal and structural movements.
d. Loosening or weakening of fasteners, attachments, and other components.
e. Failure of operating units.

C. Structural Loads:

1. Wind Loads: As indicated on Drawings.
2. Other Design Loads: As indicated on Drawings.

D. Deflection of Framing Members: At design wind pressure, as follows:

1. Deflection Normal to Wall Plane: Limited to edge of glass in a direction perpendicular to glass plane not exceeding 1/175 of the glass edge length for each individual glazing lite

or an amount that restricts edge deflection of individual glazing lites to 3/4 inch, whichever is less.

2. Deflection Parallel to Glazing Plane: Limited to 1/360 of clear span or 1/8 inch, whichever is smaller.

    a. Operable Units: Provide a minimum 1/16-inch clearance between framing members and operable units.

E. Air Infiltration: Test according to ASTM E283 for infiltration as follows:

1. Fixed Framing and Glass Area:

    a. Maximum air leakage of 0.06 cfm/sq. ft. at a static-air-pressure differential of 1.57 lbf/sq. ft..

F. Water Penetration under Static Pressure: Test according to ASTM E331 as follows:

1. No evidence of water penetration through fixed glazing and framing areas when tested according to a minimum static-air-pressure differential of 20 percent of positive wind-load design pressure, but not less than 6.24 lbf/sq. ft. Insert value.
2.

G. Energy Performance: Certify and label energy performance according to NFRC as follows:

1. Thermal Transmittance (U-factor): Fixed glazing and framing areas as a system shall have U-factor of not more than 0.38 Btu/sq. ft. x h x deg F Insert value as determined according to NFRC 100.
2. SHGC: Fixed glazing and framing areas as a system shall have a SHGC of no greater than 0.40 as determined according to NFRC 200.

H. Thermal Movements: Allow for thermal movements resulting from ambient and surface temperature changes:

1. Temperature Change: 120 deg F, ambient; 180 deg F, material surfaces.
2. Thermal Cycling: No buckling; stress on glass; sealant failure; excess stress on framing, anchors, and fasteners; or reduction of performance when tested according to AAMA 501.5.

    a. High Exterior Ambient-Air Temperature: That which produces an exterior metal-surface temperature of 180 deg F.
    b. Low Exterior Ambient-Air Temperature: 0 deg F.

2.2 SOURCE LIMITATIONS

A. Obtain all components of curtain-wall system and storefront system, including framing entrancessun control and accessories, from single manufacturer.

2.3 GLAZED ALUMINUM CURTAIN WALL SYSTEMS

A. Manufacturers: Subject to compliance with requirements, provide products by one of the following:

1. EFCO Corporation.

2. Kawneer North America, an Arconic company.
3. Oldcastle BuildingEnvelope (OBE); CRH Americas.
4. Trulite Glass & Aluminum Solutions, LLC.
5. Tubelite Inc.
6. U.S. Aluminum; a brand of C.R. Laurence.
7. YKK AP America Inc.

B. Framing Members: Manufacturer's extruded framing members of thickness required and reinforced as required to support imposed loads.

1. Construction: Thermally broken.
2. Glazing System: Retained mechanically with gaskets on four sides.
3. Glazing Plane: Front.
4. Finish: High-performance organic finish.
5. Fabrication Method: Either factory- or field-fabricated system.
6. Aluminum: Alloy and temper recommended by manufacturer for type of use and finish indicated.
7. Steel Reinforcement: As required by manufacturer.

C. Pressure Caps: Manufacturer's standard aluminum components that mechanically retain glazing.

1. Include snap-on aluminum trim that conceals fasteners.

D. Brackets and Reinforcements: Manufacturer's standard high-strength aluminum with nonstaining, nonferrous shims for aligning system components.

E. Glazing: As specified in Section 08 8000 "Glazing".

F. Entrance Door Systems: Comply with Section 08 4113 "Aluminum-Framed Entrances and Storefronts".

2.4 SUN CONTROL

A. Sunshades: Assemblies consisting of manufacturer's standard outrigger brackets, louvers, and fascia, designed for attachment to curtain wall with mechanical fasteners.

1. Basis-of-Design Product: Kawneer Versoleil SunShade Single Blade System
2. Orientation: Vertical.
3. Projection from Wall: As indicated on Drawings.
4. Mounting Bracket: Adjustable to angle indicated on Drawings.
5. Louvers:
   a. Shape: Airfoil.
   b. Width: 14 inches.
   c. Mounting Angle: As indicated on Drawings.
6. Finish: Match adjacent glazed aluminum curtain wall.
7. Aluminum: Alloy and temper recommended by manufacturer for type of use and finish indicated.
8. Steel Reinforcement: As required by manufacturer.

2.5 GLAZING

A. Glazing: Comply with Section 08 8000 "Glazing."

B. Glazing Gaskets: ASTM C509 or ASTM C864. Manufacturer's standard.

1. Color: Black.

C. Glazing Sealants: Comply with Section 088000 "Glazing."

1. Verify sealant has a VOC content of 250 g/L or less.

D. Weatherseal Sealants: ASTM C920 for Type S; Grade NS; Class 25; Uses NT, G, A, and O; chemically curing silicone formulation that is compatible with structural sealant and other system components with which it comes into contact; recommended by structural-sealant, weatherseal-sealant, and structural-sealant-glazed curtain-wall manufacturers for this use.

1. Color: Match structural sealant.

2.6 MATERIALS

A. Sheet and Plate: ASTM B209.

B. Steel Reinforcement:

1. Structural Shapes, Plates, and Bars: ASTM A36/A36M.
2. Cold-Rolled Sheet and Strip: ASTM A1008/A1008M.
3. Hot-Rolled Sheet and Strip: ASTM A1011/A1011M.

C. Steel Reinforcement Primer: Manufacturer's standard zinc-rich, corrosion-resistant primer complying with SSPC-PS Guide No. 12.00; applied immediately after surface preparation and pretreatment. Select surface preparation methods according to recommendations in SSPC-SP COM, and prepare surfaces according to applicable SSPC standard.

D. Recycled Content of Aluminum Components: Postconsumer recycled content plus one-half of preconsumer recycled content not less than 25 percent.

2.7 ACCESSORIES

A. Fasteners and Accessories: Manufacturer's standard corrosion-resistant, nonstaining, nonbleeding fasteners and accessories compatible with adjacent materials.

1. Use self-locking devices where fasteners are subject to loosening or turning out from thermal and structural movements, wind loads, or vibration.
2. Reinforce members as required to receive fastener threads.
3. Use exposed fasteners with countersunk Phillips screw heads, finished to match framing system.

B. Anchors: Three-way adjustable anchors with minimum adjustment of 1 inch that accommodate fabrication and installation tolerances in material and finish compatible with adjoining materials and recommended by manufacturer.

C. Concealed Flashing: Manufacturer's standard corrosion-resistant, nonstaining, nonbleeding flashing compatible with adjacent materials.

D. Bituminous Paint: Cold-applied asphalt-mastic paint containing no asbestos, formulated for 30-mil thickness per coat.

2.8 FABRICATION

A. Form or extrude aluminum shapes before finishing.

B. Weld in concealed locations to greatest extent possible to minimize distortion or discoloration of finish. Remove weld spatter and welding oxides from exposed surfaces by descaling or grinding.

C. Fabricate components that, when assembled, have the following characteristics:

1. Profiles that are sharp, straight, and free of defects or deformations.
2. Accurately fitted joints with ends coped or mitered.
3. Physical and thermal isolation of glazing from framing members.
4. Accommodations for thermal and mechanical movements of glazing and framing to maintain required glazing edge clearances.
5. Provisions for field replacement of glazing from exterior.
6. Fasteners, anchors, and connection devices that are concealed from view to greatest extent possible.
7. Components curved to indicated radii.

D. Fabricate components to resist water penetration as follows:

1. Internal guttering system or other means to drain water passing joints, condensation occurring within framing members, and moisture migrating within glazed aluminum curtain wall to exterior.
2. Pressure-equalized system or double barrier design with primary air and vapor barrier at interior side of glazed aluminum curtain wall and secondary seal weeped and vented to exterior.

E. Curtain-Wall Framing: Fabricate components for assembly using shear-block system Insert description.

F. Factory-Assembled Frame Units:

1. Rigidly secure nonmovement joints.
2. Prepare surfaces that are in contact with structural sealant according to sealant manufacturer's written instructions, to ensure compatibility and adhesion.
3. Preparation includes, but is not limited to, cleaning and priming surfaces.
4. Seal joints watertight unless otherwise indicated.
5. Install glazing to comply with requirements in Section 08 8000 "Glazing."

G. After fabrication, clearly mark components to identify their locations in Project according to Shop Drawings.

2.9 ALUMINUM FINISHES

A. Clear Anodic Finish: AAMA 611, AA-M12C22A41, Class I, 0.018 mm or thicker.

2.10 SOURCE QUALITY CONTROL

A. Structural Sealant: Perform quality-control procedures complying with ASTM C1401 recommendations, including, but not limited to, assembly material qualification procedures, sealant testing, and assembly fabrication reviews and checks.

PART 3 - EXECUTION

3.1 EXAMINATION

A. Examine areas, with Installer present, for compliance with requirements for installation tolerances and other conditions affecting performance of the Work.

B. Proceed with installation only after unsatisfactory conditions have been corrected.

3.2 PREPARATION

A. Prepare surfaces that will contact structural sealant according to sealant manufacturer's written instructions, to ensure compatibility and adhesion. Preparation includes, but is not limited to, cleaning and priming surfaces.

3.3 INSTALLATION, GENERAL

A. Comply with manufacturer's written instructions.

B. Do not install damaged components.

C. Fit joints to produce hairline joints free of burrs and distortion.

D. Rigidly secure nonmovement joints.

E. Install anchors with separators and isolators to prevent metal corrosion and electrolytic deterioration and to prevent impeding movement of moving joints.

F. Where welding is required, weld components in concealed locations to minimize distortion or discoloration of finish. Protect glazing surfaces from welding.

G. Seal joints watertight unless otherwise indicated.

H. Metal Protection:

1. Where aluminum is in contact with dissimilar metals, protect against galvanic action by painting contact surfaces with primer, applying sealant or tape, or installing nonconductive spacers as recommended by manufacturer for this purpose.
2. Where aluminum is in contact with concrete or masonry, protect against corrosion by painting contact surfaces with bituminous paint.

I. Install components to drain water passing joints, condensation occurring within framing members, and moisture migrating within glazed aluminum curtain wall to exterior.

J. Install components plumb and true in alignment with established lines and grades.

3.4 INSTALLATION OF GLAZING

A. Install glazing as specified in Section 08 8000 "Glazing."

1. Prepare surfaces that will contact structural sealant according to sealant manufacturer's written instructions, to ensure compatibility and adhesion. Preparation includes, but is not limited to, cleaning and priming surfaces.

3.5 INSTALLATION OF WEATHERSEAL SEALANT

A. Install weatherseal sealant according to Section 07 9200 "Joint Sealants" and according to sealant manufacturer's written instructions to produce weatherproof joints. Install joint filler behind sealant as recommended by sealant manufacturer.

3.6 ERECTION TOLERANCES

A. Install glazed aluminum curtain walls to comply with the following maximum tolerances:

1. Plumb: 1/8 inch in 10 feet; 1/4 inch in 40 feet.
2. Level: 1/8 inch in 20 feet; 1/4 inch in 40 feet.
3. Alignment:

    a. Where surfaces abut in line or are separated by reveal or protruding element up to 1/2 inch wide, limit offset from true alignment to 1/16 inch.
    b. Where surfaces are separated by reveal or protruding element from 1/2 to 1 inch wide, limit offset from true alignment to 1/8 inch.
    c. Where surfaces are separated by reveal or protruding element of 1 inch wide or more, limit offset from true alignment to 1/4 inch.

4. Location: Limit variation from plane to 1/8 inch in 12 feet; 1/2 inch over total length.

3.7 FIELD QUALITY CONTROL

A. Testing Agency: Engage a qualified testing agency to perform tests and inspections.

B. Field Quality-Control Testing: Perform the following test on representative areas of glazed aluminum curtain walls.

1. Water-Spray Test: Before installation of interior finishes has begun, areas designated by Architect shall be tested according to AAMA 501.2 and shall not evidence water penetration.

    a. Perform a minimum of two tests in areas as directed by Architect.
    b. Perform tests in each test area as directed by Architect. Perform at least three tests, prior to 10, 35, and 70 percent completion.

2. Water Penetration: ASTM E1105 at a minimum uniform static-air-pressure differential of 0.67 times the static-air-pressure differential specified for laboratory testing in "Performance Requirements" Article, but not less than 6.24 lbf/sq. ft., and shall not evidence water penetration.

C. Glazed aluminum curtain walls will be considered defective if they do not pass tests and inspections.

D. Prepare test and inspection reports.

END OF SECTION 08 4413

SECTION 08 7100 - DOOR HARDWARE

1.1 WARRANTY

A. Materials and Workmanship: Three years.

1.2 FIELD QUALITY CONTROL

A. Independent Architectural Hardware Consultant: Contractor engaged.

B. Occupancy Adjustment: After six months.

1.3 DOOR HARDWARE SCHEDULE

A.

END OF SECTION 08 7100

SECTION 08 8000 - GLAZING

1.1 SUMMARY

A. Glass for doors, interior borrowed lites, storefront framing, glazed curtain walls.
B. Glass display case system.
C. Glass shelving for display cases.

1.2 WARRANTY

A. Coated-Glass Products: 10 years.

B. Insulating Glass: 10 years.

1.3 SUSTAINABILITY REQUIREMENTS

1. Low-emitting sealants.

1.4 PERFORMANCE REQUIREMENTS

A. Engineering design of glass by Contractor.

1.5 MATERIALS

A. Silicone Glazing Sealants: Neutral curing, Class 100/50.

B. Glazing Tapes: Expanded-cellular type.

1.6 MONOLITHIC GLASS SCHEDULE

A. Glass Type GL-#3: Clear annealed float glass.

B. Glass Type GL-#4: Clear fully tempered float glass.

1.7 INSULATING GLASS SCHEDULE

A. Glass Type GL-#2: Low-E-coated, tinted insulating glass.

1. Outdoor Lite: Tinted fully tempered float glass.
2. Indoor Lite: Clear fully tempered float glass.

B. Glass Type GL-#1: Low-E-coated, tinted insulating glass.

1. Outdoor Lite: Tinted annealed float glass.
2. Indoor Lite: Clear annealed float glass.

1.8 DISPLAY CASE SYSTEM

A. Basis-of-Design Product: Subject to compliance with requirements, provide Blumcraft Series 1301-SM Display Case Doors.

1. Pivots: Surface Mounted, top and bottom.
2. Glass: ½” thick, clear tempered
3. Top and Bottom Rails: Satin, clear aluminum. Top and bottom rails measure 1-1/4" x 1-1/4".
4. Sidelights/Centerlights: Fixed, matching door glass.
5. Accessories: Provide roller catch stop, lever type cam lock, and strike plate for each operable display case door.

a. Keying: Key all display case cam lock identically.

END OF SECTION 08 8000

SECTION 08 8300 - MIRRORS

1.1 WARRANTY

A. Warranty: Five years.

1.2 SUSTAINABILITY REQUIREMENTS

1. Low-emitting adhesives.

1.3 PRODUCTS

A. Glass Mirrors: ASTM C1503; manufactured using copper-free, low-lead mirror coating process.

B. Annealed Monolithic Glass Mirrors: Mirror Select Quality, clear.

1. Nominal Thickness: 6.0 mm.

C. Mirror Hardware: stainless-steel standoffs.

D. Mirror Edges: Flat polished.

END OF SECTION 08 8300

SECTION 09 2216 - NON-STRUCTURAL METAL FRAMING

1.1 SUSTAINABILITY REQUIREMENTS

1. Recycled content.

1.2 QUALITY ASSURANCE

A. Code-compliance certification of studs and tracks.

1.3 MATERIALS

A. Steel Framing:

1. Steel studs and tracks.
2. Embossed, high-strength steel studs and tracks.
3. **Heavy Duty jamb/header studs**
4. Slip-Type Head Joints:

   a. Single long-leg track.
   b. Double tracks.
   c. Deflection track.

5. Firestop track.
6. Flat strap and backing plate.
7. Cold-rolled channel bridging.
8. Hat-shaped, rigid furring channels.
9. Resilient furring channels.
10. Cold-rolled furring channels.
11. Z-shaped furring.

B. Suspension Systems:

1. Wire hangers.
2. Flat hangers.
3. Carrying channels (main runners).
4. Furring channels.
5. Grid suspension systems for ceilings.

END OF SECTION 09 2216

SECTION 09 2900 - GYPSUM BOARD

1.1 QUALITY ASSURANCE

A. Mockups for the following:

1. Levels of exposed gypsum board finish.
2. Texture finishes.

1.2 SUSTAINABILITY REQUIREMENTS

1. Recycled content.
2. Low-emitting adhesives.

1.3 MATERIALS

A. Interior Gypsum Board:

1. Gypsum wallboard.
2. Gypsum board, Type X.
3. Flexible gypsum board.
4. Gypsum ceiling board.
5. Impact-resistant gypsum board.
6. Mold-resistant gypsum board.

B. Exterior Gypsum Board for Ceilings and Soffits:

1. Exterior gypsum soffit board.

C. Tile-Backing Panels:

1. Glass-mat, water-resistant backing board.

D. Trim Accessories:

1. Interior.
2. Exterior.

E. Auxiliary Materials:
1. Acoustical Sealant.

END OF SECTION 09 2900

SECTION 09 3013 - CERAMIC TILING

1.1 SUSTAINABILITY REQUIREMENTS

1. Low-emitting adhesives.

1.2 TILE PRODUCTS

A. Tile Type: porcelain tile.

1. Basis-of-Design Product: As indicated on Drawings.
2. Size: As indicated on Drawings.
3. Face Size Variation: Rectified.
4. Description: As indicated on Drawings.
5. Trim Shapes: Base cove.

1.3 ACCESSORY MATERIALS

A. Crack Isolation Membrane: Fabric-reinforced, fluid-applied membrane.

B. Metal edge strips.

1.4 INTERIOR TILE INSTALLATION SCHEDULE

A. Interior Floors on Concrete:
1. TCNA F112: Cement mortar bed bonded to concrete. High-performance grout.

B. Interior Walls, Wood or Metal Studs or Furring:
1. TCNA W245 or TCNA W248: Thinset mortar on glass-mat, water-resistant gypsum backer board. High-performance grout.

END OF SECTION 09 3013

SECTION 09 5113 - ACOUSTICAL PANEL CEILINGS

1.1 QUALITY ASSURANCE

A. Mockups for each form of construction.

1.2 SUSTAINABILITY REQUIREMENTS

1. Recycled content.
2. Low-emitting ceilings.

1.3 PERFORMANCE REQUIREMENTS

A. Flame-Spread Index: Class A.

B. Smoke-Developed Index: 50.

1.4 PRODUCTS

A. Acoustical Panels:

1. Type III: Mineral base with painted finish.
2. Pattern: C (perforated, small holes).
3. Thickness: 5/8 inch.
4. Modular Size: 24 by 24 inches.

B. Metal Suspension System: .
1. Wide-Face, Capped, Double-Web Steel: Heavyduty.

C. Metal Edge Moldings and Trim: Roll-formed sheet metal.

1.5 ERECTION TOLERANCES

A. Main and Cross Runners: Level to within 1/8 inch in 12 feet.

B. Moldings and Trim: Level to within.

END OF SECTION 09 5113

SECTION 09 6513 - RESILIENT BASE AND ACCESSORIES

1.1 SUSTAINABILITY REQUIREMENTS

1. Low-emitting adhesives.

1.2 PRODUCTS

A. Resilient Base: Thermoset rubber.

1. Style and Location:

a. Straight: In areas with carpet.
b. Cove: In areas with resilient flooring.

2. Minimum Thickness: 0.125 inch.
3. Height: As indicated on Drawings.
4. Outside Corners: Job formed.
5. Inside Corners: Job formed.

B. Resilient Accessories: Rubber.
1. Reducer strip for resilient flooring.
2. Joiner for tile and carpet.
3. Transition strips.

C. Installation Materials:

1. Trowelable leveling and patching compounds.
2. Adhesives.
3. Metal edge strips.

END OF SECTION 09 6513

SECTION 09 6813 - TILE CARPETING

1.1 QUALITY ASSURANCE

A. Mockups for each type of carpet tile installation.

1.2 WARRANTY

A. Materials and Workmanship for Carpet Tile: 10 years.

1.3 SUSTAINABILITY REQUIREMENTS

1. Low-emitting adhesives.

1.4 PRODUCTS

A. Carpet Tile CPT-1: As indicated on Drawings

B. Carpet Tile CPT-2: As indicated on Drawings

END OF SECTION 09 6813

SECTION 09 9113 - EXTERIOR PAINTING

1.1 SUSTAINABILITY REQUIREMENTS

A. Low-emitting exterior applied products.

1.2 PAINT, GENERAL

A. MPI-listed products.

1.3 SOURCE QUALITY CONTROL

A. Testing Agency: Owner engaged.

1.4 EXTERIOR PAINTING SCHEDULE

A. Concrete Substrates, Nontraffic Surfaces:
   1. High-build latex system.

B. Steel and Iron Substrates:

   1. Water-based light industrial coating system.

C. Galvanized-Metal Substrates:
   1. Water-based light industrial coating system.

D. Exterior Gypsum Board Substrates:

   1. Latex system.

END OF SECTION 09 9113

SECTION 09 9123 - INTERIOR PAINTING

1.1 SUSTAINABILITY REQUIREMENTS

1. Low-emitting paints and coatings.

1.2 PAINT, GENERAL

A. MPI-listed products.

1.3 INTERIOR PAINTING SCHEDULE

A. Concrete Substrates, Nontraffic Surfaces:
1. High-performance architectural latex system.

B. Steel Substrates:
1. High-performance architectural latex system.
2. Water-based dry-fall over shop-applied quick-drying shop primer system.

C. Galvanized-Metal Substrates:

1. Latex system.
2. Institutional low-odor/VOC latex system.
3. High-performance architectural latex system.
4. Water-based light industrial coating system.
5. Water-based dry-fall system.
6. Alkyd over cementitious primer system
7. Alkyd dry-fall system (cementitious primer).
8. Aluminum paint system (cementitious primer).

D. Gypsum Board Substrates:
1. High-performance architectural latex system.

E. Cotton or Canvas and ASJ Insulation-Covering Substrates: Including pipe and duct coverings
1. Institutional low-odor/VOC latex system.

END OF SECTION 09 9123

SECTION 10 1100 - VISUAL DISPLAY UNITS

1.1 SUSTAINABILITY REQUIREMENTS

1. Low-emitting adhesives.
2. Low-emitting composite wood products.

1.2 WARRANTY

A. Materials and Workmanship for Porcelain-Enamel Face Sheets: 50 years.

1.3 PRODUCTS

A. Visual Display Board Assembly: Markerboard panels.

1. Assembly: factory.
2. Frames and Trim: Factory-applied aluminum.
3. Mounting: Direct to wall.
4. Accessories: Display rail Chalk tray.
5. Special-purpose graphics.

B. Rail support system for visual display boards.

C. Modular support system for visual display boards.

1.4 MATERIALS

A. Visual Display Panels:
1. Markerboard Panel: Faced with porcelain enamel.

B. Aluminum Finishes: Clear anodic.

END OF SECTION 10 1100

SECTION 10 1419 - DIMENSIONAL LETTER SIGNAGE

1.1 DIMENSIONAL CHARACTERS

A. Cutout Characters: Stainless steel.

1. Character Height: As indicated.
2. Finish: No. 4 stainless steel.
3. Mounting: Concealed studs.
4. Typeface: As indicated.

END OF SECTION 10 1419

SECTION 10 1423 - ROOM-IDENTIFICATION PANEL SIGNAGE

1.1 SUSTAINABILITY REQUIREMENTS

1. Low-emitting adhesives.

1.2 SIGNS

A. Room-Identification Sign: Sign with exposed edges.

1. Laminated-Sheet Sign: Photopolymer sheet with raised graphics.

a. Graphics: Paint.

2. Mounting: Surface mounted with two-face tape.
3. Text and Typeface: Accessible raised characters and Braille.

END OF SECTION 10 1423

SECTION 10 2113.19 - PLASTIC TOILET COMPARTMENTS

1.1 SUMMARY

A. Solid-plastic toilet compartments configured as toilet enclosures and urinal screens**.**

1. Toilet-Enclosure Style: Ceiling hung.
2. Urinal-Screen Style: Wall hung, flat panel.

1.2 SUSTAINABILITY REQUIREMENTS

1. Recycled content.

1.3 PERFORMANCE REQUIREMENTS

A. Surface-Burning Characteristics: ASTM E84.

1. Flame-Spread Index: 25 or less.
2. Smoke-Developed Index: 450 or less.

B. Regulatory Requirements: Comply with applicable provisions in U.S. Architectural & Transportation Barriers Compliance Board's ADA-ABA Accessibility Guidelines for Buildings and Facilities and ICC A117.1 for toilet compartments designated as accessible.

1.4 COMPONENTS

A. Door, Panel, Screen, and Pilaster Construction: Solid, high-density polyethylene (HDPE) panel material with homogenous color and pattern throughout thickness of material.

1. Integral Hinges: Configure doors and pilasters to receive integral hinges.
2. Heat-Sink Strip: Manufacturer's standard continuous, extruded-aluminum strip fastened to exposed bottom edges of solid-plastic components to hinder malicious combustion.
3. Color and Pattern: in each room as selected by Architect from manufacturer's full range.

B. Brackets (Fittings):
1. Full-Height (Continuous) Type: Extruded aluminum.

a. Polymer Color and Pattern: Contrasting with panel, as selected by Architect from manufacturer's full range.

1.5 HARDWARE AND ACCESSORIES

A. Hardware and Accessories: Manufacturer's heavy-duty stainless-steel operating hardware and accessories.

END OF SECTION 10 2113

SECTION 10 2600 - WALL AND DOOR PROTECTION

1.1 SUSTAINABILITY REQUIREMENTS
1. Low-emitting adhesives.

1.2 PERFORMANCE REQUIREMENTS

A. Surface Burning Characteristics: Class A.

B. Accessibility requirements of authority having jurisdiction.

1.3 PRODUCTS

A. Wall Guards:
1. Rub Strip: Surface-mounted, PVC-free plastic.

B. Corner Guards:

1. Surface-Mounted, Plastic-Cover Type: 8 feet high, using one-piece aluminum retainer.

C. Abuse-Resistant Wall Coverings:
1. Laminated, Impact-Resistant Wall Panels: (FRP) Plastic sheet wall covering laminated to high-impact-resistant core; full-wall height.

END OF SECTION 10 2600

SECTION 10 2800 - TOILET, BATH, AND LAUNDRY ACCESSORIES

1.1 WARRANTY

A. Silver Spoilage for Mirrors: 15 years.

1.2 PRODUCTS

A. Public-Use Washroom Accessories:

1. Toilet tissue (roll) dispenser.
2. Combination towel (folded) dispenser/waste receptacle.
3. Liquid-soap dispenser.
4. Grab bar.
5. Sanitary-napkin disposal unit.
6. Coat hook.

B. Childcare Accessories:

1. Diaper-changing station.

C. Underlavatory guards.

D. Custodial Accessories:
1. Mop and broom holder.

END OF SECTION 10 2800

SECTION 10 4413 - FIRE PROTECTION CABINETS

1.1 PRODUCTS

A. Fire-Protection Cabinets:

1. Type: Fire extinguisher.
2. Cabinet Construction: Nonrated.
3. Mounting: Recessed.
4. Door Style: Vertical duo panel with frame.
5. Door Glazing: Tempered float glass (clear).
6. Finish:

a. Steel: Baked enamel, TGIC polyester powder coat, HAA polyester powder coat, epoxy powder coat, or polyester/epoxy hybrid powder coat, complying with AAMA 2603.

END OF SECTION 10 4413

SECTION 10 4416 - FIRE EXTINGUISHERS

1.1 SUMMARY

A. Section includes portable, hand-carried fire extinguishers and mounting brackets for fire extinguishers.

1.2 WARRANTY

A. Materials and Workmanship: Six years.

1.3 PERFORMANCE REQUIREMENTS

A. Fire Extinguishers: Complying with NFPA 10 and approved, listed, and labeled by FM Global.

1.4 PRODUCTS

A. Portable Hand-Carried Fire Extinguishers:
   1. Multipurpose dry-chemical type.

B. Mounting brackets.

END OF SECTION 10 4416

SECTION 10 7300 - PROTECTIVE COVERS

PART 1 GENERAL

1.1 SECTION INCLUDES

A. Pre-Fabricated, Custom Designed Fixed Protective Canopies and Covers:
1. Design scope includes but is not limited to the following.
a. Overhead canopies.

1.2 REFERENCES

A. ASTM International (ASTM):
1. ASTM A307 - Standard Specification for Carbon Steel Bolts, Studs, and Threaded Rod 60 000 PSI Tensile Strength.
2. ASTM A792 - Standard Specification for Steel Sheet, 55 percent Aluminum-Zinc Alloy-Coated by the Hot-Dip Process.
3. ASTM B209 - Standard Specification for Aluminum and Aluminum-Alloy Sheet and Plate.
4. ASTM B221 - Standard Specification for Aluminum and Aluminum-Alloy Extruded Bars, Rods, Wire, Profiles, and Tubes.
5. ASTM E2950 - Standard Specification for Metal Canopy Systems.

B. American Society of Civil Engineers (ASCE):
1. ASCE 7 - Minimum Design Loads and Associated Criteria for Buildings and Other Structures.

C. American Welding Society (AWS):
1. AWS D1.1 - Structural Welding Code.

D. American Architectural Manufacturer's Association
1. AAMA 2603 - Voluntary Specification, Performance Requirements and Test Procedures for Pigmented Organic Coatings on Aluminum Extrusions and Panels (with Coil Coating Appendix).

1.3 SUBMITTALS

A. Submit under provisions of Section 01 3000 - Administrative Requirements.

B. Product Data:
1. Manufacturer's data sheets on each product to be used.
2. Preparation instructions and recommendations.
3. Storage and handling requirements and recommendations.
4. Typical installation methods.
5. Include information for factory finish, accessories and other required components.
6. Include color charts for finish indicating manufacturer's standard colors available for selection.

C. Verification Samples: Samples of Aluminum finishes for roof panels and all support structures will be provided as needed.

D. Drawings: Details of materials, construction and finish. Include relationship with adjacent construction. Layout of each canopy or shelter, showing location of supporting members. Include elevations and details.

E. Certification: Submit design calculations signed by a Registered Professional Engineer, licensed in the project state. Design calculations shall state that the protective cover system design complies with the wind requirements of ASCE 7, the stability criteria of applicable building code, and all other governing criteria.

1.4 QUALITY ASSURANCE

A. Manufacturer Qualifications: Company specializing in manufacturing products specified in this section with a minimum five years documented experience.
   1. Designer Qualifications: Engineer experienced in design of this type of work and licensed in State in which Project is located.
      a. Comply with applicable code for submission of design calculations, reviewed shop and erection drawings.

B. Installer Qualifications: Company specializing in performing Work of this section with minimum three years documented experience with projects of similar scope and complexity.

C. Source Limitations: Provide each type of product from a single manufacturing source to ensure uniformity.

1.5 DELIVERY, STORAGE, AND HANDLING

A. Deliver materials to project site ready for installation whenever possible.

B. Store and handle in strict compliance with manufacturer's written instructions and recommendations.

C. Protect from damage due to weather, excessive temperature, and construction operations.

1.6 PROJECT CONDITIONS

A. Maintain environmental conditions (temperature, humidity, and ventilation) within limits recommended by manufacturer for optimum results. Do not install products under environmental conditions outside manufacturer's recommended limits.

1.7 WARRANTIES

A. Manufacturer's standard limited warranty. Correct defective work within a three year period after Date of Substantial Completion.

PART 2 PRODUCTS

2.1 MANUFACTURERS

A. Subject to compliance with requirements, provide products from the following manufacturers:

1. Ballew's Aluminum Products, Inc.
2. Duo-Gard Industries
3. Mapes Architectural Products
4. Peachtree Protective Covers
5. Perfection Architectural Systems, Inc.
6. Superior Metal Products Company

2.2 PERFORMANCE AND DESIGN REQUIREMENTS

A. Pre-Engineered Metal Protective Covers.
   1. Standards compliance: Pre-engineered system complying with ASTM E2950 and in

accordance with ASCE 7.
a. Loading: As indicated on Drawings and in compliance with local authorities having jurisdiction.
b. Deflection Limit: L/120 of span.
2. Thermal Movement: No buckling, joint seal failure, fastener failure, or component failure.
a. Ambient Temperature Range: Up to 120 degrees F (49 degrees C)
b. Surface Temperature Range: Up to 180 degrees F (82 degrees C)
3. Shop fabricate to the greatest extent possible; disassemble if necessary for shipping.
a. Complete system ready for erection at project site.
b. Perform welding in accordance with AWS D1.1.

B. Extruded Aluminum Canopy Components:
1. Decking: 3 inch (76 mm) extruded aluminum deck with grooves on 1/3 points.
a. Wall Thickness: 0.060 inch (1.52 mm).
b. Section (Depth x Width): 2-15/16 x 6 inch (75 x 152 mm).
2.Extruded Fascia/Gutter (Width x Height x Thickness): 4.00 x 8 inches (102 x 203 mm).
a. Aluminum: 0.125 inch (3.00 mm) wall thickness.
3.Overhead Hangers: Extruded aluminum tubing 6005-T5 alloy.
a. Dimensions (Width x Depth x Wall Thickness): 1-1/2 x 1-1/2 x 0.125 inch (38 x 38 x 3.18 mm).

C. Material:
1. Smooth aluminum:
a. Extrusions: Meeting requirements of ASTM B221, alloy 6061-T6, 6063-T5, or 6063-T6.
b. Sheets: Meeting requirements of ASTM B209, alloy 3105-H28 or 3004-H34.
2. Sealants: Single component clear 100 percent silicone.
3. Accessories: Flashings, brackets, and other items as necessary for complete system.
4. Fasteners: Non-structural:
a. Stainless steel. ASTM F593.
b. Carbon steel. ASTM A307.

D. Anchorage Devices, Clips and Fasteners: Manufacturer's standard type, compatible with materials being secured, of size and spacing sufficient to resist indicated loads.
1. Above roof deck, utilize fasteners with neoprene washers.
2. Anchor Bolts: ASTM A307 or ASTM A572.
3. Provide nuts and washers as required for column leveling and plumbing.

E. Exposed Downspouts: Aluminum with baked enamel finish, color to match canopy covering, manufacturer's recommended size for canopy specified.

2.3 FABRICATION

A. Roof Panels: extruded panels with interlocking seams.

B. Fascias: Extrusions.
1. Fabricated, bored and notched for mechanical connection.
2. Provide notches, cut out, and internal deflectors in members as noted to act as internal water drainage system.

2.4 FINISHES

A. Factory Applied Polyester Paint Finish: Comply with AAMA 2603, chemically cleaned, conversion coated primer, followed by factory applied baked polyester enamel coating.
1. Color: As selected from manufacturer's standard colors.

PART 3 EXECUTION

3.1 EXAMINATION

A. Do not begin installation until substrates have been properly constructed and prepared.

B. If substrate preparation is the responsibility of another installer, notify Architect in writing of unsatisfactory preparation before proceeding.

3.2 PREPARATION

A. Clean surfaces thoroughly prior to installation.

B. Prepare surfaces using the methods recommended by the manufacturer for achieving the best result for the substrate under the project conditions.

3.3 INSTALLATION

A. Install in accordance with manufacturer's instructions approved submittals and in proper relationship with adjacent construction.
   1. Install members plumb and square, free from warp or twist, securely anchored to substrates with appropriate fasteners and accessories.
   2. Maintain dimensional tolerances and alignment with adjacent work.
   3. Ensure joints are hairline tight and surfaces flush with adjacent components.

3.4 FIELD QUALITY CONTROL

A. Field Inspection: Coordinate field inspection in accordance with appropriate sections in Division 01.

B. Manufacturer's Services: Coordinate manufacturer's services in accordance with appropriate sections in Division 01.

3.5 CLEANING AND PROTECTION

A. Clean products in accordance with the manufacturer’s recommendations.

B. Touch-up, repair or replace damaged products before Substantial Completion.

END OF SECTION 10 7300

SECTION 11 6623 - GYMNASIUM EQUIPMENT

1.1 SUSTAINABILITY REQUIREMENTS

1. Low-emitting composite wood products.

1.2 WARRANTY

A. Materials and Workmanship: Five years.

1.3 PRODUCTS

A. Safety Pads: column pads.

1. Surface-Burning Characteristics: ASTM E84.
2. Pad Coverings: Puncture- and tear-resistant PVC-coated polyester.
3. Column safety pads.

END OF SECTION 11 6623

SECTION 11 6833.43 - TRACK & FIELD EQUIPMENT

PART 1 - GENERAL

1.1 SUMMARY

A. This section covers all labor and materials required to install a first-class track & field equipment.

B. The SSC is responsible for the purchase & installation of all track & field equipment. The SSC is responsible for installation of synthetic surface in, around and on top of the specified equipment.

1.2 CODES AND STANDARDS

A. Codes and standards follow the current guidelines set forth by the National Collegiate Athletic Association. Where discrepancies or deficiencies are noted between these various governing bodies, the NCAA notes that for technical information it yields to the WA Facilities Manual.

1.3 ABBREVIATIONS

A. WA = World Athletics (formerly IAAF)

B. NCAA = National Collegiate Athletic Association

C. NFHS = National Federation of State High School Associations

D. T&F = Track & Field

E. SS = Synthetic Surface

F. SSC = Synthetic Surfacing Contractor

G. GC = General Contractor

H. TBD = To Be Determined

I. PSI = Pounds per Square Inch

1.4 RELATED WORK

A. Drawings and general provisions of the Contract, including General and Supplementary Conditions and other Division-1 Specification Sections, apply to this Section. The following Sections are specifically related to each other:
   1. Section 116833.43 – Track & Field Equipment
   2. Section 131823.40 – Track & Field Banked System
   3. Section 131823.41 – Track & Field Line Markings
   4. Section 131823.42 – Track & Field Event Materials
   5. Section 131823.44 – Track & Field NCAA Certification

1.5 SUBMITTALS

A. The following information must be submitted by the SSC prior to installation.

   1. Standard printed specifications and diagrams or drawings depicting installation directions and dimensions for all in-ground sports equipment.
   2. Installation process and requirements for subbase (concrete or stone and asphalt) and any conditions that may limit the installation or affect quality of installation.
   3. Material safety data sheets on all products, as necessary.

1.6 QUALITY ASSURANCE

A. The SSC shall only accept bids from those vendors or manufacturers that have been pre-approved or identified as approved equal.

PART 2 - PRODUCTS

2.1 T&F EQUIPMENT

A. The following vendors/manufacturers are approved for bidding:
   1. Gill Athletics, Ryver Morrow at cell # 706-362-4015
   2. SportsField Specialties, Dave Moxley at cell # 607-287-9460
   3. UCS, Mike Chappell at cell # 530-228-5826

B. Basis of Design: the manufacturer's product number listed in this specification establishes the minimum quality for each product. All items must come from the same manufacturer or vendor, mix & match is not allowed.

C. T&F Embedded Equipment
   1. UCS and their products are the basis of design.
   2. One Cast Aluminum Vault Box with no cover. Model # 711-1100.
   3. Three Grand Prix Long Jump Triple Jump Takeoff System. This product is the 8 inch wide synthetic board, with 4 inch foul board and blanking lids are required. Model # 519-2100.
   4. One College Long/Triple Jump Sand Pit Form with no Sand Catchers. Model # 519-3100.
   5. One College Mesh Sand Pit Cover for long/triple jump. Model # 519-1230.
   6. One aluminum curb, powder coated white, for a non-permanent install for the 200 meter oval. Model # 792-9413.
      a. The sections shall be numbered on the bottom side.
   7. One Aluminum Webbed Throwing Ring with Cross Bracing for shot put/weight throw. Model # 725-2540.
   8. One Cast Aluminum Toe Board for Depressed pad for the shot put. Model # 716-1630.
   9. One Aluminum Webbed Throwing Ring with Cross Bracing for discus. Model # 725-2530.
   10. One Cast Aluminum Concentric Circle, converts discus circle at 8’-2” down to 7’ diameter for hammer. Model # 725-2535.
   11. Ten Communication Boxes for Synthetic Surfacing, 19.25”W x 36.375”L x 12.875”H. Model # 712-1150.

D. T&F Loose Equipment – not included in this specification section.

PART 3 - EXECUTION

3.1 INSTALLATION REQUIREMENTS

A. The installation of the in-ground sports equipment shall follow the directions/instructions of the manufacturer and/or vendor. Shop drawings must be submitted and approved prior to ordering and installation of equipment.

B. Standard concrete with a minimum of 3500 psi or as per the vendor’s recommendation.

END OF SECTION 11 6833.43

SECTION 12 3661 - SOLID SURFACING COUNTERTOPS

1.1 SUSTAINABILITY REQUIREMENTS
1. Low-emitting adhesives.
2. Low-emitting composite wood.

1.2 SOLID SURFACE MATERIAL COUNTERTOPS

A. Front: Straight, slightly eased edge.

B. Backsplash and End Splash: Eased edge.

C. Countertops: 1/2-inch- thick, solid surface material.

D. Integral sinks.

1.3 INSTALLATION

A. Install on plywood subtops with adhesive.

END OF SECTION 12 3661

SECTION 129300 - SITE FURNISHINGS

PART 1 - GENERAL

1.1 SUMMARY

A. This Section includes the following University of Kentucky standard site furnishings:
   1. Bicycle Racks.
   2. Litter & Recycling Receptacle.
   3. Bollards.

1.2 SUBMITTALS

A. Product Data: For each type of product indicated.

B. Samples: For each exposed finish.

C. Material Certificates: For site furnishings, signed by manufacturers.

D. Maintenance Data.

PART 2 - PRODUCTS

2.1 MATERIALS

A. Steel:

   1. Plates, Shapes, and Bars: ASTM A 36/A 36M.
   2. Steel Pipe: Standard-weight steel pipe complying with ASTM A 53, or electric-resistance-welded pipe complying with ASTM A135.
   3. Tubing: Cold-formed steel tubing complying with ASTM A 500.
   4. Mechanical Tubing: Cold-rolled, electric-resistance-welded carbon or alloy steel tubing complying with ASTM A 513, or steel tubing fabricated from steel complying with ASTM A 569/A 569M and complying with dimensional tolerances in ASTM A 500; zinc coated internally and externally.
   5. Sheet: Commercial steel sheet complying with ASTM A 569/A 569M.
   6. Baked-Enamel, Powder-Coat Finish: Manufacturer's standard, baked, polyester-TGIC, powder-coat finish complying with finish manufacturer's written instructions for surface preparation, including pretreatment, application, baking, and minimum dry film thickness.

2.2 BICYCLE RACKS

A. Basis-of-Design Product: Provide the Varsity Bike Dock DV211 (2 Bike Capacity) by Parkabike, Inc., 800-630-7225.

B. Bicycle Rack Finish: Zinc galvanized with black powder-coated finish.

C. Installation Method: Surface mounted with (2) 3/8” x 4-1/2” wedge sleeve anchors.

2.3 LITTER & RECYCLING RECEPTACLE

A. Basis-of-Design Product: Provide model no: SC999-06231 by Landscape Forms 1-888-337-6729. This is the Scarborough model with vertical strap insert, special lid with two hole/slot combo openings. Two custom signs: Special Sign 75. Recycling Lid color: Ocean. Landfill Lid color: Black. Body color: Black.

2.4 BOLLARDS

A. Fixed Bollards shall consist of an 8” diameter concrete filled galvanized steel pipe with a plastic sleeve as depicted on the drawings.

B. Bollard Sleeves or Covers shall consist of a LDPE or HDPE cover with rounded top, 1/4-inch thick with integral color and adhesive/tape system to anchor cover to bollard. Reflective tape is to be provided but not installed unless requested by the Owner after installation is complete.
   1. Size: sleeve sizes to be coordinated with pipe bollard sizes and field verified prior to ordering.
   2. Color: sleeves for bollards at vehicular drop-off and approach to pedestrian bridge shall be Kentucky Blue (Pantone 286C).
   3. Basis of Design: Ideal Shield ¼-inch Bollard Cover – Detroit, MI, 1-866-825-8659.
   4. Additional Stock: Provide two (2) covers for additional Owner stock to be used for future replacement, including adhesive/tape anchor system.

2.5 FABRICATION

A. Metal Components: Form to required shapes and sizes with true, consistent curves, lines, and angles. Separate metals from dissimilar materials to prevent electrolytic action.

B. Welded Connections: At exposed connections, finish surfaces smooth and blended so no roughness or unevenness shows after finishing and welded surface matches contours of adjoining surfaces.

C. Pipes and Tubes: Form simple and compound curves by bending members in jigs to produce uniform curvature for each repetitive configuration required; maintain cylindrical cross section of member throughout entire bend without buckling, twisting, cracking, or otherwise deforming exposed surfaces of handrail and railing components.

D. Exposed Surfaces: Polished, sanded, or otherwise finished; all surfaces smooth, free of burrs, barbs, splinters, and sharpness; all edges and ends rolled, rounded, or capped.

E. Factory Assembly: Assemble components in the factory to greatest extent possible to minimize field assembly. Clearly mark units for assembly in the field.

PART 3 - EXECUTION

3.1 INSTALLATION, GENERAL

A. Comply with manufacturer's written installation instructions unless more stringent requirements are indicated. Complete field assembly of site furnishings where required.

END OF SECTION 129300

SECTION 13 1823.40 – TRACK & FIELD BANKED SYSTEM

PART 1 - GENERAL

1.1 SUMMARY

A. This section covers all design, engineering, fabrication, labor & materials required to install a Track & Field Banked System. The General Contractor must select the structure and Track & Field Synthetic Surface from the same Track & Field Synthetic Surfacing Contractor.

1.2 CODES AND STANDARDS

A. Codes and standards follow the current guidelines set forth by the National Collegiate Athletic Association. Where discrepancies or deficiencies are noted between these various governing bodies, the NCAA notes that for technical information it yields to the World Athletics Facilities Manual.

1.3 ABREVIATIONS

A. WA = World Athletics (formerly IAAF)

B. NCAA = National Collegiate Athletic Association

C. NFHS = National Federation of State High School Associations

D. T&F = Track & Field

E. SS = Synthetic Surface

F. SSC = Synthetic Surfacing Contractor

G. SSM = Synthetic Surfacing Manufacturer

H. GC = General Contractor

I. SBR = Styrene Butadiene Rubber

J. EPDM = Ethylene Propylene Diene Monomer

K. UV = Ultra-Violet

L. PU = Polyurethane

M. MDI = Methylene Diphenyl Isocyanate

N. TDI = Toluene Diisocyanate Isocyanate

O. PSF = Pounds per Square Foot

P. ASTM = American Society for Testing and Materials

Q. ML = Measure Line

1.4 RELATED WORK

A. Drawings and general provisions of the Contract, including General and Supplementary Conditions and other Division-1 Specification Sections, apply to this Section. The following Sections are specifically related to each other:
   1. Section 116833.43 – Track & Field Equipment
   2. Section 131823.40 – Track & Field Banked System
   3. Section 131823.41 – Track & Field Line Markings
   4. Section 131823.42 – Track & Field Event Materials
   5. Section 131823.44 – Track & Field NCAA Certification

1.5 SCOPE OF WORK

A. The T&F SSC is responsible for all the following items and these items are referred to as the

Track & Field Banked System:

1. The Track & Field Synthetic Surface:
   a. On the 200m banked oval, on the infield (the area inside the track oval) and all areas outside the track oval up to the walls, as defined in these bidding documents.
   b. Track & Field Synthetic Surfacing, Line Markings and NCAA Certification.
2. Throwing Area:
   a. Chain-link fencing is not included in this specification Section, can be found in a separate specification Section and prepared by others. The GC is responsible for this item.
   b. Concrete pads with embedded track equipment, is included and is specified in a related Section.
3. The structural steel & wood structure under the banked oval and two jump runways including all fixtures, event materials and equipment. The infield with the high jump and 8 sprint lanes do not have structure under them.
4. The vinyl skirt hiding the structure under the oval and 2 runways is not included in this project. This shall be provided by the Owner at a future date.
5. Embedded track equipment as specified in a related Section.
6. Guard Rails at both turns.
7. Crash Pads for the sprint lanes.

1.6 SUBMITTALS

A. The following information must be submitted by the T&F SSC prior to installation of the concrete floor.
   1. T&F Banked System including structural steel, plywood & fastners, guard rails and crash pads requiring all drawings must be signed and sealed by a licensed structural engineer.
   2. A colored layout of the T&F SS areas.
   3. Full shop drawings of the elevated structures for the oval and runways.
   4. Notify the Design Team of any deviations between this technical specification and the custom T&F SSC's specifications.
   5. Installation process, requirements and tolerances for concrete subbase under all T&F SS, including Concrete Moisture Mitigation.
   6. Any conditions that may limit the installation or affect the quality of installation; for example, 1) temperature & humidity conditions limiting quality of installation, 2) moisture content too high in the concrete, 3) dust from adjacent construction, 4) overhead work above the track, etc.
   7. Design and layout of all expansion & control joints in the concrete slab where the T&F SS is installed. This MUST be coordinated with the GC.
   8. Standard specification and application for recommended primers, crack filler, patching and leveling material.
   9. Acceptable concrete moisture mitigation: 1) vapor barrier under the concrete, 2) topically applied or 3) an admixture. This MUST be coordinated with the GC.
   10. Three product samples (one for the Owner, one for the Architect and one for the GC), a minimum of 1' x 1' in size, the same color, same texture, same thickness, etc. of the SS being installed. This must be a representative sample of the product. This sample must be submitted and approved by the Owner & Architect, prior to installation. During installation of the SS or at completion of the project this sample may be used as a comparison to judge the quality of the installed product. Separate SS samples are required for each product, texture and color being installed.
   11. WA certificate and the full laboratory testing report identifying all performance characteristics of the T&F SS product to be installed.
   12. Submittals for all products in this specification Section.
   13. Material safety data sheets on all individual components of the system being installed.

B. The following information shall be submitted after completion of the specified work:

1. SSC's standard Warranty, for labor and materials respectively, noting any exceptions to the Warranty information included in this Specification Section.
2. Operations and Maintenance Manual for the T&F Banked System.
3. Completed NCAA certification form.

1.7 QUALITY ASSURANCE

A. The SSC must have previous experience with the design, engineering, manufacturing & installation of at least five T&F Banked System in the USA. Hydraulic tracks are banked tracks and can be counted in this requirement.

B. On-site Project Manager/Superintendent Qualifications:
1. This person will be on-site during all T&F Banked System installations.
2. Once the installation of the T&F Banked System begins, no substitution of this person is allowed without prior approval.
3. This person must have worked on and have a complete understanding of this system.

C. The GC shall coordinate and ensure he has communicated with and provided all necessary information to the sub-contractors performing work that could affect the quality of installation of the T&F Banked System. Information includes, but are not limited, to:
1. Concrete floor tolerances and moisture mitigation methods.
2. No overhead work allowed after the T&F SS is being installed.
3. No construction that causes dust is allowed after the T&F SS is installed.

D. Prior to installation, or during installation or at completion of installation of the T&F SS, if the Owner has any question or doubt about the quality or formulation of the T&F SS material, SSC shall have the product tested. If the product meets these specifications, then the Owner shall pay for the cost of the testing; if the product does not meet these specifications or the SSM's specifications, then the SSC shall pay for the testing. Any material failing to meet specifications will be removed and replaced with new labor & material at the SSC's expense.

E. Slopes & Tolerances for Indoor Track & Field as per the currently published NCAA rule book; for example:
1. The maximum lateral inclination permitted, across all indoor banked oval straightaways and across all runways, should not exceed 1:100 (1%). The maximum lateral inclination permitted for a flat indoor oval, across the full width of the oval toward the inside lane, shall not exceed 1:1000 (0.1%). Any indoor facility that exceeds this inclination shall be defined as banked. The inside edge of the curb or lane line shall be horizontal throughout the length of the indoor track.
2. The maximum overall downward inclination permitted in the running direction shall not exceed 1:250 (0.4%), at any point and 1:1000 (0.1%) overall. The maximum overall downward inclination permitted in the throwing direction for all landing sectors shall not exceed 1:1000 (0.1%).
3. In the high jump approach and takeoff area, the maximum overall downward inclination of the last 15 meters shall not exceed 1:250 (0.4%), in the direction toward the center of the crossbar.
4. The surface of a throwing circle shall be level.
5. Where technically possible, runways shall have a uniform resilience.
6. For a banked oval, the angle of banking in all lanes should be the same at any cross section.
7. Concrete subbase to receive T&F SS must not deviate more than 1/8 inch under a 10 foot straight edge.
8. At least 9.14 meters (30 feet) of overhead clearance should be provided without obstruction (lights, beams, ceiling, etc.).

1.8 SPECIAL PROJECT CONDITIONS

A. The SSC must provide a technician that will serve as a consultant to the Owner and GC during the installation of the concrete floor, first reviewing the specification, accepting the specification as correct, and then, providing daily review and guidance of the construction of

the concrete which will directly affect the NCAA tolerances and longevity of the eventual installation.

B. Install SS in the following:
   1. 3 take-off board trays with 1” notches along the 8” side of the PU plug.
   2. 1 recessed Discus circle, cut PU plug in half.
   3. 10 ComBox covers

1.9 WARRANTY

A. Warranty Period:
   1. The structure under the oval and runways shall have a ten (10) year warranty and the T&F SS shall have a warranty for ten (10) years.

B. Warranties specified in this section shall not deprive the Owner of other rights the Owner may have under other provisions of the Contract Documents and are in addition to and run concurrent with other warranties made by the GC under requirements of the Contract Documents.

C. The following are inclusive of the term T&F Banked System for provisions of the guarantee:
   1. Design, engineering, fabrication, labor, materials and all components of the T&F Banked System.
   2. Structures under the oval and runways.
   3. T&F embedded equipment installed by the SSC, including the sand.
   4. T&F SS material.
   5. Painted line markings.
   6. Crash pad & structure.
   7. Guard rails and end pads.

D. Warranty: Provide in writing a “Full System Guarantee” agreement. The President/Principal(s) of both the SSC and the manufacturer of the T&F Banked System structure (if different) shall sign this document and it shall include the following:
   1. Shall cover all labor and materials to remove and dispose of all defective or damaged items and replace with new materials including labor at no cost to the Owner.
   2. All work executed under this section will be free from defects of materials and workmanship for the specified period from date of Substantial Completion/Acceptance of the Owner.
   3. The warranty shall not be prorated.
   4. All material shall be guaranteed to the extent that the T&F Banked System:
      a. Has been manufactured, applied and will perform in accordance with these specifications, the SSC’s specifications and industry standards.
      b. All protected steel, plywood, shims, fasteners, etc. will be properly constructed.
      c. T&F SS will hold fast and/or adhere to the primer, wood, prefabricated mat, concrete, edging, filler, patches or overlay materials.
      d. Is Ultra-Violet resistant, will not bubble, blister, fade, crack, chalk or wear excessively during the warranty period.
   5. One replacement of high stress areas during the warranty period at no cost to the Owner; High stress areas are estimated at 100 square yards of labor and materials.
   6. One free restriping of the T&F Line Markings during the T&F SS warranty period at no cost to the Owner.

E. The SSC shall, in the presence of the Owner, inspect the T&F SS each year until the end of the warranty period, or at any time requested by the Owner. Any defects in workmanship or materials (at no fault of the Owner) shall be repaired at the expense of the SSC to the satisfaction of the Owner.

F. The Warranties described shall be conditioned upon:
   1. Owner shall maintain all products as described in the Operation & Maintenance manual submitted by the SSC.

G. The Warranty does not cover any defect, failure, damage caused by or connected with abuse, neglect, deliberate acts, acts of God, casualty or loads exceeding the SSC's "Operation and Maintenance" manual.

PART 2 - PRODUCTS

2.1 PERFORMANCE REQUIREMENTS

A. Delegated Design: A qualified & experienced professional engineer must design the T&F Banked System.
   1. Engineering Responsibility: Preparation of Shop Drawings, design calculations, and other structural data.

B. Design Loads:
   1. The installed structure shall have a load rating of 100 PSF.

C. Steel Framing:
   1. Conform to the following minimum ASTM Grade & Yield Strength requirements:
      a. Plates at A36 & 36 Fy in Ksi
      b. Base Plates at A36 & 36 Fy in Ksi
      c. Structural Pipe at A53 Grade B & 35 Fy in Ksi
      d. Square/Rectangular HSS at A500 Grade C & 50 Fy in Ksi
      e. Round HSS at A500 Grade C & 46 Fy in Ksi
      f. All Other Steel at A36 & 36 Fy in Ksi
   2. Welded connections shall conform to the latest code of the American Welding Society.

D. Fire Performance:
   1. Surface-Burning Characteristics: Comply with ASTM E 84; testing by a qualified testing agency. Identify products with appropriate markings of applicable testing agency.
      a. Flame-Spread Index: 25 or less.
      b. Smoke-Developed Index: 450 or less.

E. Thermal Movements: Allow for thermal movements from ambient and surface temperature changes acting on exterior metal fabrications by preventing buckling, opening of joints, overstressing of components, failure of connections, and other detrimental effects. Base engineering calculation on surface temperatures of materials due to both solar heat gain and nighttime-sky heat loss.
   1. Temperature Change: 120 deg F, ambient; 180 deg F, material surfaces.

2.2 T&F SSC

A. Subject to compliance with these requirements, provide products by one of the following:
   1. Beynon Sports Surfaces, contact John Beynon at 410-935-4058.
   2. Mondo USA, contact Glenn Hoy at 610-389-2616.

2.3 T&F BANKED SYSTEM

A. Basis-of-Design Product: Beynon Sports Surfaces shall provide their T&F Banked System or a comparable approved product.

B. Steel Framing Materials:
   1. Steel Plates, Shapes, and Bars: ASTM A36/A36M.
   2. Steel Tubing: ASTM A500/A500M, cold-formed steel tubing.
   3. Steel Bolts and Nuts: Regular hexagon-head bolts, ASTM A307, Grade A (ISO 898-1, Property Class 4.6); with hex nuts, ASTM A563 (ASTM A563M); and, where indicated, flat washers.
   4. High-Strength Bolts, Nuts, and Washers: ASTM F3125/F3125M, Grade A325 (Grade A325M), Type 3, heavy-hex steel structural bolts; ASTM A563, Grade DH3, (ASTM A563M, Class 10S3) heavy-hex carbon-steel nuts; and where indicated, flat washers.
   5. Galvanizing: Hot dip galvanized steel, ASTM A123.
   6. Galvanizing Repair Paint: Repair with dry film containing a minimum of 94 percent zinc

dust by weight.
a. Galvilite by ZRC Worldwide or approved comparable product with a Galvanized finish.

C. Supporting Structure or Leveling Feet:
1. Leveling Feet: With rubber pads to absorb sound and vibration. No plywood between foot and concrete slab.
2. Laser/Brake mounting pad with steel shims for leveling.
3. Anchor to concrete slab:
a. 8 locations on the inside & 8 locations at the outside perimeter of the track oval, evenly spaced.
b. Both sides of the runway at the beginning, center and end of runway and all 4 corners of the sand pit
c. Both sides of the runway at the beginning, center and end of runway and all 4 corners of the landing area

D. Plywood:
1. Marine grade plywood.
2. Nominal Thickness: 3/4 inch, minimum; to meet performance requirements.
3. Finish the outside edge of the plywood to match the color of the Synthetic Surfacing on the oval.
4. Factory Finished: Intumescent paint applied to the underside to achieve a Class A rating.

E. Polyurethane Synthetic Surface:
1. Basis-of-Design Product: Beynon Sports Surfaces and their products as indicated below.
2. Products: BSS 4000 Hobart Texture, BSS1000 Hobart Texture and PolyTurf Plus SP.
3. WA Certification:
a. Current certified product.
b. Current certified thickness.
4. Product Locations:
a. BSS 4000 Hobart Texture installed on all structured areas, as identified on the drawings.
b. BSS 1000 Hobart Texture installed on all concrete subbase areas inside and outside the track oval, as identified on the drawings.
c. PolyTurf Plus SP smooth texture at the shot put / weight throw landing area.
5. Adhesive: Epoxy based, two-component, solvent free adhesive.
6. Rubber Shock Pad: Comprised of 100% recycled SBR rubber granules bound together with PU binder and is prefabricated into rolls.
7. Pore Sealer: Solvent free, thixotropic two-component PU.
8. Elastomeric PU: Two-component elastomeric PU compounded from polyol and isocyanate components based on 100% MDI.
9. EPDM Granulate: sized 0.5mm to 2.0mm and pigmented.
10. Hobart Texture:
a. Moisture cured aliphatic PU clear coat.
b. Moisture cured aliphatic, pigmented PU, matching the color of the EPDM granulate.

F. Rubber Synthetic Surface:
1. Mondo and their product or a comparable approved product as indicated below at all locations:
2. Product: Mondo Super X 720.
3. Wearing Texture: Embossed.
4. WA Certification:
a. Current certified product.
b. Current certified thickness.
5. Product Locations:

a. Mondo Super X 720 installed on all structured areas and concrete areas, as identified on the drawings.

6. Adhesive:
   a. Mondo PU 105 on concrete & wood substrates.
   b. Mondo PU 100 on Mondo Everlay.
7. Rubber Product:
   a. Rubber layers are calendered and vulcanized with a particular closed cell structure, based on special isoprenic rubbers, mineral fillers, stabilizing agents and pigmentation.
   b. Prefabricated rubber rolls with a honeycomb design.
   c. Texture: matte embossing.
   d. Provide extra stock material from original dye lots, for use in facility operations and maintenance (approximately 2% of the total floor surface for each color, surface texture and format of the SSM product).

G. Colors: The Owner would like a three color scheme and these colors shall be from the SSC's standard color palette and finalized with shop drawings.
   1. Track oval and sprint lanes are Royal Blue.
   2. Infield and area outside the oval are medium Gray.
   3. Throwing area landing sector is dark Gray.

H. Installation Tolerances in compliance with the NCAA rule book:
   1. The maximum lateral inclination permitted, across all indoor banked oval straightaways and across all runways, should not exceed 1:100 (1%). The maximum lateral inclination permitted for a flat indoor oval, across the full width of the oval toward the inside lane, shall not exceed 1:1000 (0.1%). Any indoor facility that exceeds this inclination shall be defined as banked. The inside edge of the curb or lane line shall be horizontal throughout the length of the indoor track.
   2. The maximum overall downward inclination permitted in the running direction shall not exceed 1:250 (0.4%), at any point and 1:1000 (0.1%) overall. The maximum overall downward inclination permitted in the throwing direction for all landing sectors shall not exceed 1:1000 (0.1%).
   3. In the high jump approach and takeoff area, the maximum overall downward inclination of the last 15 meters shall not exceed 1:250 (0.4%), in the direction toward the center of the crossbar.
   4. The surface of a throwing circle shall be level.
   5. Where technically possible, runways shall have a uniform resilience.
   6. For a banked oval, the angle of banking in all lanes should be the same at any cross section.
   7. Concrete subbase to receive T&F SS must not deviate more than 1/8 inch under a 10 foot straight edge.
   8. At least 9.14 meters (30 feet) of overhead clearance should be provided without obstruction (lights, beams, ceiling, etc.).

2.4 T&F BANKED SYSTEM ACCESSORIES

A. Guardrails:
   1. Similar to guardrails installed at previous vendues.
   2. Metal railing, 1-1/2" diameter and permanently installed.
   3. Finish: Powder Coated.
   4. Color: As selected by Architect from SSC's standard colors via shop drawings.
   5. End Pads: Foam padding covered with vinyl, as indicated on drawings.

B. Crash Pads:
   1. Mounted on a steel frame with wood back support and must withstand horizontal impact stresses caused by 6-8 athletes arriving at the Crash Pads at speeds of up to 8m/second.

2. Polyurethane foam at 8” to 12” thick.
3. Cover: 14oz. vinyl, spike proof.
4. Mounting: Frame mounted to oval structure and concrete slab.
5. Extend 2’ wider/past lane 1 and lane 8.
6. Begin 1 foot above the track surface and extend 6 feet high, for a total of 7 feet above the track surface.
7. Color: As selected by Architect from manufacturer's standard colors via shop drawings.
8. Logo: Custom.

C. Throws Area:
1. Landing area to receive Polyturf Plus SP with a smooth texture, spike-proof, and capable of withstanding the impact of the shot and weight implement.
2. See specification Section 116833.43 “Track and Field Equipment” for recessed shot put throwing circle & toe board and discus circle.

D. Warmup Lanes:
1. Surface: Same PU as installed at the infield and area outside the oval.

PART 3 - PART 3 - EXECUTION

3.1 EXAMINATION AND QUALITY CONTROL

A. Verify that substrate is dry and in suitable condition to begin installation in accordance with manufacturer's written instructions.

B. Proceed with installation only after unsatisfactory conditions have been corrected by the GC.

C. Concrete Slabs: Verify that concrete substrates are dry and moisture-vapor emissions are within acceptable levels according to manufacturer's written instructions.
1. Typical, minimum drying time for a 4” thick slab of concrete is 60 days, TBD with SSC.
2. Concrete surface pH is between 7 to 10 with the relative humidity of the concrete slab must not exceed 80% as per ASTM 2170.

D. Temperature and Relative Humidity:
1. During installation of the T&F SS the temperature inside the building must be between 65° to 85° F.
2. During installation of the T&F SS the relative humidity inside the building must be between 35% to 52%.
3. When installing over wood, plywood must be dry and should have a moisture content ranging between 6% and 12%, when measured with a quality wood moisture meter (electronic hygrometer).

3.2 PREPARATION

A. Concrete Slabs:
1. Grind high spots and fill low spots on concrete substrates to produce a maximum 1/8-inch deviation in any direction when checked with a 10-foot straightedge.
2. Use trowelable leveling and patching compounds, according to SSC's written instructions, to fill cracks, holes, and depressions in substrates.
3. Remove coatings including curing compounds and other substances on substrates that are incompatible with installation adhesives and that contain soap, wax, oil, or silicone; use mechanical methods recommended by manufacturer. Do not use solvents.

B. Move SS materials and installation machinery into spaces where they will be installed at least 48 hours in advance of installation unless manufacturer recommends a longer period in writing.

C. Broom and vacuum clean substrates to be covered immediately before product installation. After cleaning, examine substrates for moisture, alkaline salts, carbonation, or dust. Proceed with installation only after unsatisfactory conditions have been corrected.

3.3 T&F BANKED SYSTEM INSTALLATION

A. Install structures, plywood and accessories under supervision of SSC's authorized representative to produce a rigid, firm installation that complies with performance requirements and is free of instability, rocking, rattles, and squeaks.

B. After installation of steel structure frame, wire brush and clean all areas where galvanized coating has been damaged or is missing. Touch up areas with galvanizing repair paint in accordance with manufacturer's printed instructions.

C. Mechanical Attachment of Leveling Feet: Attach structure to concrete slab with mechanical anchors, as needed.

D. Adjust Leveling Feet so installed panels are flat, level, and at the proper height.

E. Install plywood subflooring on steel structure with proprietary fasteners.

F. Install T&F SS on plywood.

G. Install Line Markings, as per Section 131823.41.

H. Install guardrails, crash pads, and other accessories per SSC's instructions.

I. Allow for one area/section of the track oval, long/triple jump runway and the pole vault runway to be removable, approximately 10' to 15' wide for access.

J. Manufacture one portable ramp, approximately 10' wide, to be placed on the outside edge of the track oval's straight for access of a cleaning machine to clean the track oval. The cleaning machine can access the infield via the permanent ramp at the sprint lanes.

3.4 POLYURETHANE SYNTHETIC SURFACE INSTALLATION (BEYNON SPORTS SURFACES)

A. As per the SSC's standard installation literature and must follow all industry standards.

B. Rubber Shock Pad: Install 10mm thick recycled Rubber Shock Pad into fresh adhesive and roll with a 100lb. linoleum roller and continue to roll as necessary to ensure adhesive transfer. Pad must be firmly attached to all plywood.

C. Pore Sealer: Thoroughly mix Pore Sealer & install Pore Sealer onto Rubber Shock Pad with a flat trowel overlapping 50% with each pass. Pad must be totally sealed.

D. Base Layers or Force Reduction Layers: Thoroughly mix the 0.5mm to 2.0mm EPDM granules into the elastomeric PU by a specially designed machine with automatic portioning, which provides continuous mixing, feeding and finishing for accurate quality control. Excess granules shall be mechanically swept prior to next layer. Number of layers and thickness as per the WA Certification.

E. Resilient Wearing Layer: Thoroughly mix the 0.5mm to 2.0mm EPDM granules into the elastomeric PU by a specially designed machine with automatic portioning, which provides continuous mixing, feeding and finishing for accurate quality control. Excess granules shall be mechanically swept prior to next layer. Thickness as per the WA Certification.

F. The SSC shall take great care installing this SS by careful regulation of the viscosity of the liquid PU so the PU does not all run downhill into lane 1.

G. Hobart Texture:
   1. First Application: Apply one application of the single component, aliphatic clear PU coating over the embedded EPDM granules at a rate of 5-6 gallons per 1,000 square feet.
   2. Second Application: Apply two applications of the two component pigmented PU coating at a rate of 7 gallons per 1,000 square feet.

H. Line Markings: Install the Line Markings as per Section 131823.41.

I. NCAA Certification: Prepare and submit Certification, as per Section 131823.44.

3.5 RUBBER SYNTHETIC SURFACE INSTALLATION (MONDO)

A. As per the SSC's standard installation literature & brochure and must follow all industry standards.

B. Allow all material to acclimate to site temperature prior to installation.

C. Unroll material and allow rubber to relax overnight or minimum of 12 hours; colder temperatures may require additional time.

D. Dry lay and cut to fit all material prior to adhesion.

E. All head (short) seams shall be staggered.

F. All side (long) seams to fall under painted lines for running lanes and runways.

G. One edge of the head (short) seam and side (long) seam to have 3/16 inch overlap to provide a tight compression seam when glued.

H. Apply adhesive with proper sized trowel; a V shaped trowel with 1/8" (height, width & spacing) notch; adjust size of trowel to insure a minimum of 90% adhesive transfer.

I. Immediately remove any adhesive from areas where it is not intended to be while it is still fresh, dried adhesive is difficult to remove.

J. Prior to applying weights to the seams, manually work the seams to ensure all seams are perfectly flat and tight with NO peaking; Use a lightweight (100lb) roller to eliminate entrapped air and roll in multiple directions.

K. Weights must be applied over all seams and completely cover the seam; Only use gray concrete utility bricks (2"x4"x8"); weights to remain in place a minimum of 12 to 24 hours depending on site temperature and adhesive curing.

3.6 PROTECTING AND CLEANING

A. Protect installed products from damage and wear during remainder of construction period.

B. Clean spillage and soiling from adjacent construction using cleaning agents and procedures recommended by manufacturer of affected construction.

C. Perform the following operations immediately after completing flooring synthetic surface installation:
   1. Remove adhesive and other blemishes from flooring surfaces.
   2. Sweep and vacuum flooring thoroughly.
   3. Damp-mop flooring to remove marks and soil after time period recommended in writing by manufacturer.

D. Protect flooring from mars, marks, indentations, and other damage from construction operations and placement of equipment and fixtures during remainder of construction period. Use protection methods recommended in writing by manufacturer.

E. Do not move heavy and sharp objects directly over flooring. Protect synthetic surface with plywood or hardboard panels to prevent damage from storing or moving objects over flooring.

END OF SECTION 13 1823.40

SECTION 13 1823.41 - TRACK & FIELD LINE MARKINGS

PART 1 - GENERAL

1.1 SUMMARY

A. This section covers all labor and materials required to install the track & field line markings. The SSC is responsible for the layout, installation and certification of all items.

1.2 CODES AND STANDARDS

A. Codes and standards follow the current guidelines set forth by the National Collegiate Athletic Association. Where discrepancies or deficiencies are noted between these various governing bodies, the NCAA notes that for technical information it yields to the WA Facilities Manual.

1.3 ABREVIATIONS

A. WA = World Athletics (formerly IAAF)

B. NCAA = National Collegiate Athletic Association

C. NFHS = National Federation of State High School Associations

D. USATF = United States of America Track & Field (National Governing Body)

E. T&F = Track & Field

F. SS = Synthetic Surface

G. SSC = Synthetic Surfacing Contractor

H. SSM = Synthetic Surfacing Manufacturer

I. GC = General Contractor

J. UV = Ultra-Violet

1.4 RELATED WORK

A. Drawings and general provisions of the Contract, including General and Supplementary Conditions and other Division-1 Specification Sections, apply to this Section. The following Sections are specifically related to each other:
   1. Section 116833.43 – Track & Field Equipment
   2. Section 131823.40 – Track & Field Banked System
   3. Section 131823.41 – Track & Field Line Markings
   4. Section 131823.42 – Track & Field Event Materials
   5. Section 131823.44 – Track & Field NCAA Certification

1.5 SUBMITTALS

A. The following information must be submitted by the SSC and approved by the Owner or Designer prior to installation.
   1. A drawing depicting the colors of all line markings and labels of the events. Also, all symbols and markings clearly identified, illustrated, and their colors stated. The recommended NCAA colors shall be used.
   2. ***Review and submit this specification (Section 13 1823.41 – T&F Indoor Line Markings), as a submittal on the Vendors letterhead.***
   3. Installation process and requirements for line markings and any conditions that may limit the installation or affect quality of installation.
   4. Material safety data sheets on all products, as necessary.

B. The following information shall be submitted at the completion of the specified work.

1. Upon completion of all line markings, the SSC shall submit to the Owner five diagram/drawing depicting and identifying all line markings: 1) a key to the color codes, 2) a chart for all symbols, and 3) labels for all events.
2. The GC shall submit Section 131823.43 – T&F NCAA Certification.

1.6 QUALITY ASSURANCE

A. If the GC identifies any errors or omissions in these line markings, he shall notify the Owner & Design Team prior to painting any markings.

B. The following information must be submitted by the GC with the BID:

C. The line striper must have previous experience with the layout and installation of at least 5 indoor banked tracks in the United States in the past 10 years. All facilities must have been surveyed and be certified to meet the rules of the NCAA and/or the WA.

1.7 WARRANTY

A. All line marking shall be warranty for 5 years; one free repainting of the line markings is included in this warranty.

B. The line markings shall provide full coverage with no visible signs of synthetic surface below.

C. The paint shall not flake or peel or delaminate or wear excessively during the warranty period.

D. The installer of the line marking shall not paint the line markings if the synthetic surface is not properly prepared to receive the paint.

PART 2 - PRODUCTS

2.1 PAINT

A. The paint must be approved by the SSC and/or SSM.

B. Temporary reference markings must be removed at the completion of the project or within 14 days; i.e. chalk, nails or tape.

C. Paint shall be UV stable and adhere securely to the synthetic surface.

PART 3 - EXECUTION

3.1 SUMMARY

A. General line markings of the 200 meter track & field events shall be spray applied, using only paint, primers and finishes supplied and guaranteed by the synthetic surfacing contractor.

B. No line markings shall be installed if the indoor conditions are not proper, i.e. too dusty, too cold or humidity too high.

C. All line markings must be reviewed and verified with the Owner’s representative prior to installation.

D. The line striper must NOT make any changes to the approved line marking submittal without the written approval from the Owner’s representative (Architect, Engineer or track & field Consultant).

3.2 LINE MARKINGS

A. Paint – all markings to receive sufficient paint to fully cover the synthetic surface, no synthetic surface shall be visible under the installed paint. All paint shall be crisp with clean

edges, no excessive overspray from working too fast or improper equipment.

B. Line markings for all courts (basketball, volleyball, etc.) as shown on the architectural drawings. All line marking colors shall be determined by shop drawings and submittals.

C. Track Oval
1. The measure line is not painted.
2. Oval is 200.001 meters.
3. Track oval will utilize a regulation curb, 30 cm rule.
4. Radius to the oval's lane 1 measure line must be verified with SSC's line marking submittal.

D. Painted Line Precedence
1. Lane lines to take precedence over other markings.
2. Numbers and letters to be broken at all lane lines and start lines.
3. Waterfall starting lines take precedence over straight starting lines.
4. Straight starting lines to taper at waterfall starting lines and maintain a ½" unpainted gap.

E. Assembly Lines – not to be painted.

F. 55 Meters
1. One direction on the sprint lanes on the infield
2. Event label:
   a. 55
   b. Approximately 3" high
   c. The color is white
   d. Located in the outside lane and is above/past the starting line
3. Color of starting line is white

G. 55 Meter Hurdles
1. One direction on the sprint lanes on the infield
2. Event label:
   a. 55
   b. Approximately 3" high
   c. The color is white
   d. Located in the outside lane and is above/past the starting line
3. Color of the starting line is white
4. The hurdle tic marks are:
   a. Men: Green
   b. Women: Orange
   c. Hurdle tic marks are a 2" wide by 4" long bar
   d. Two tic marks per lane with each tic mark adjacent to the lane line

H. 60 Meters
1. One direction on the sprint lanes on the infield
2. Event label:
   a. 60
   b. Approximately 3" high
   c. The color is white
   d. Located in the outside lane and is above/past the starting line
3. Color of starting line is white

I. 60 Meter Hurdles
1. One direction on the sprint lanes on the infield
2. Event label:
   a. 60
   b. Approximately 3" high
   c. The color is white
   d. Located in the outside lane and is above/past the starting line

3. Color of the starting line is white
4. The hurdle tic marks are:
   a. Men: Blue
   b. Women: Yellow
   c. Hurdle tic marks are a 2” wide by 4” long bar
   d. Two tic marks per lane with each tic mark adjacent to the lane line

J. Sprint Lanes - Ramp Markings
1. The incline or ramp from the sprint lanes up to the oval lanes shall have 2” wide lines, yellow in color, at a 45° angle and painted every 2’ apart

K. 200 Meters
1. All in lanes
2. Event label:
   a. 200
   b. Approximately 3” high
   c. The color of the label to be white
   d. Located in lane 2 and is above/past the starting line
3. Color of the starting line is white

L. 300 Meters
1. All in lanes
2. Event label:
   a. 300
   b. Approximately 3” high
   c. The color is white
   d. Located in lane 2, and is above/past the starting line
3. Color of the starting line is white

M. 400 Meters
1. In lanes with a 2 Turn Stagger
2. Event label:
   a. 400
   b. Approximately 3” high
   c. The color is white
   d. Located in lane 2 and is above/past the starting line
3. Color of the starting line is white with a blue insert centered in start line (2” wide by 12” long)

N. 500 Meter
1. In lanes with a 2 Turn Stagger
2. Event label:
   a. 500
   b. Approximately 3” high
   c. The color is white
   d. Located in lane 2 and is above/past the starting line
3. Color of the starting line is white with a black insert centered in start line (2” wide by 12” long)

O. 600 Meter
1. In lanes with a 2 Turn Stagger
2. Event label
   a. 600
   b. Approximately 3” high
   c. The color is white
   d. Located in lane 2 and is above/past the starting line
3. Color of the starting line is white with a blue insert centered in start line (2” wide by 12” long), same start line as 400m

P. 800 Meters
1. Waterfall with a 2 Turn Staggered Alley
2. Event label:
   a. 800
   b. Approximately 3” high
   c. The color is white
   d. Located in the outside lane and the label is above/past the start line
3. The color of the start line is white

Q. 1000 Meters
1. Waterfall with a 2 Turn Staggered Alley
2. Event label:
   a. 1000
   b. Approximately 3” high
   c. The color is white
   d. Located in the outside lane and the label is above/past the start line
3. The color of the start line is white

R. 1500 Meters
1. Waterfall start
2. Event label:
   a. 1500
   b. Approximately 3” high
   c. The color is white
   d. Located in the outside lane and is above or past the start line
3. The color of the start line is white

S. 1600 Meters
1. Waterfall start
2. Event label:
   a. 1600
   b. Approximately 3” high
   c. The color is white
   d. Located in the outside lane and is above/past the start line
3. Color of the start line is white

T. 1 Mile Run
1. Waterfall start with 2 Turn Staggered Alley
2. Event label:
   a. 1 Mile
   b. Approximately 3” high
   c. The color is white
   d. Located in the outside lane and is above/past the start line
3. Paint three tic mark (¾” wide by 2” long) on the infield side of lane 1 (not in lane 1); Tic marks are for ¼, ½ and ¾ splits, with no labels
4. Color of the start line is white

U. 3000 Meters
1. Waterfall start
2. Event label:
   a. 3000
   b. Approximately 3” high
   c. The color is white
   d. Located in the outside lane and is above/past the start line
3. Color of the start line is white

V. 3200 Meters
1. Waterfall start
2. Event label:

a. 3200
b. Approximately 3” high
c. The color is white
d. Located in the outside lane and is above/past the start line

3. Color of the start line is white

W. 5000 Meters
1. Waterfall start
2. Event label:
a. 5000
b. Approximately 3” high
c. The color is white
d. Located in the outside lane and is above/past the start line
3. Color of the start line is white

X. 4 x 200m Relay
1. In lanes with 3 Turn Stagger
2. Event label:
a. 4x200
b. Approximately 3” high
c. The color is white
d. Located in lane 2 and is above/past the start line
3. Color of the 3 Turn Stagger start line is white with a yellow insert centered in start line, (2” wide by 12” long)
4. The relay exchange zone markers are yellow triangles
a. Exchange zone markings are approximately 36” wide by 36” tall yellow triangles, triangles point into the 20 meter long exchange zone
b. The first exchange of the baton shall use the staggered yellow triangles; lane 1 triangles at the beginning & end of the zone shall be split blue & yellow colors
c. The second and third exchange of the baton shall use blue triangles in a straight line, 10 meters before the finish line; and at the end of this exchange zone shall use the blue & yellow triangle in lane one and the blue triangles in lanes two thru five are in a straight line 10 meters past the finish line and parallel to the finish line

Y. 4 x 400m Relay
1. In lanes with 2 Turn Stagger
2. Event label:
a. 4x400
b. Approximately 3” high
c. The color is white
d. Located in lane 2 and is above/past the start line
3. Color of the starting line is white with a blue insert centered in start line (0.30m or 12” long)
4. The relay exchange zone markers are blue triangles
a. Exchange zone markings are approximately 36” wide by 36” tall triangles, triangles point into the 20 meter long exchange zone and the zone markings are included in the 20 meter long exchange zone
b. The exchange of the baton shall use the blue triangles in a straight line, 10 meters before the finish line and the end of this exchange zone shall use the painted blue & yellow triangle in lane one and the painted blue triangles in lanes two thru five are in a straight line 10 meters past the finish line and parallel to the finish line

Z. 4 x 800m Relay
1. Waterfall start, 2 turn staggered alley
2. Event label:
a. 4x800

b. Approximately 3” high
c. The color is white
d. Located in the outside lane and is above/past the start line
3. Color of the start line is white

AA. Distance Medley Relay
1. Waterfall start with 2 Turn Staggered Alley
2. Event label:
a. DMR
b. Approximately 3” high
c. The color is white
d. Located in the outside lane and is above/past the start line
3. Color of the start line is white
4. Running order is 1200m, 400m, 800m, 1600m

BB. Staggered Alleys
1. Provide 3 staggered alley start lines:
a. 2 turn staggered alley for main waterfall start, label painted as – 2 Turn
b. 2 turn staggered alley for 1-Mile, label painted as – 2 Turn 1 Mile
2. Event label:
a. Approximately 3” high
b. The color is white
c. Located in the outside lane and is above/past the start line
3. Color of the staggered alley start line is white:
4. Paint line in lanes 4, 5 & 6

CC. Break Lines
1. Two turn break line on the home straight is a solid line, curved and the color is green; painted from the outside lane to the inside of lane two
2. Paint green tic marks (2” wide by 4” long) every 4m on the inside of lane 4 from staggered alley start line to the break line at the beginning of home straight

DD. Finish Lines
1. Locations:
a. Common finish line for oval at the point of curvature (PC)
b. Sprint lanes finish line is located where a minimum of 3 meters is between the 60m start line to the nearest edge of the track oval (or obstruction) and the 60m finish
2. 2" wide and white in color
3. The intersection of all finish lines with the lane lines shall be alternating as per the current NCAA Rule Book
4. No lean lines are to be provided

EE. Lane Numbers
1. The numbers are a block style, approximately 24” high and the numbers will NOT have a color shadow
a. The color of the numbers will be white
2. There are 3 sets of numbers:
a. There is 1 set of numbers, 1 foot before the common finish line on the track oval, facing to the outside of the oval
b. There is 1 set of numbers, 1 foot before the sprint lanes finish line, facing the same direction as the track oval numbers
c. There is 1 set of numbers at the sprint start line, 1 foot from the track oval, facing the direction of running

FF. Letters & Logos
1. One set of letters and one logo are to be provided by the SSC, including the production of the stencils
2. The Owner shall select a standard or custom font and their logo

3. The size & color of the letters & logo shall be TBD by Owner
4. The letters and logo shall be field located by the Owner
5. Letters could be KENTUCKY WILDCATS and their Athletic Department logo could be the interlocking UK, colors Royal Blue with a white border

GG. Interval Marks
1. Provide a 3/4” wide by 2” long white tic mark on the infield side of lane one at the oval and jogging lane
2. These lines are to be at 50 meter intervals starting at the common finish line and running the entire length of the track oval

HH. Long/Triple Jump
1. Runway lines
   a. 2" wide lines
   b. White in color
   c. 48" wide runways (inside edge to inside edge of line)
   d. Terminate runway 45 meters from the men’s triple jump take-off board or intersection of the inside of lane 1
2. Distance marks
   a. Provide 1.5” long by ¾” wide white lines outside the runway on the right hand (direction of running) side every foot beginning at 20 feet from the long jump foul line and extending the length of the runway or 150’ whichever is shorter
   b. Every 5 and 10 foot line to be 2” long by ¾” wide
   c. Every 10 foot line to be labeled below the line facing the athlete

II. Pole Vault
1. Runway lines
   a. 2" wide lines
   b. White in color
   c. 48" wide runways (inside edge to inside edge of line)
   d. Terminate runway lines at zero line and 45 meters from zero line or prior to intersecting the oval
2. Zero line
   a. ½" wide line and 24' long centered on back edge of vault box (not flange)
   b. White in color
3. NCAA Marks (as per the current NCAA Rule Book)
   a. Provide 36" long by 2" wide white line in the center of the runway as per the NCAA rulebook
   b. Provide 12" long by 2" wide white lines in the center of the runway as per the NCAA rulebook
   c. No painted labels
4. Distance marks
   a. Provide 1.5” long by ¾” wide white lines outside the runway on the right hand (direction of running) side every foot beginning at 20 feet from the zero line and extending the length of the runway or 150’ whichever is shorter
   b. Every 5 and 10 foot line to be 2” long by ¾” wide
   c. Every 10 foot line to be labeled below the line facing the athlete

JJ. Shot Put & Weight Throw
1. Dividing lines
   a. 2" wide lines
   b. White in color
   c. Extend 2.46' (75cm) from outer edge of throw circle
   d. The 2” line is painted toward the top half of the circle, in the direction of throwing (the athlete must exit from the rear half of the circle)
2. Sector lines (34.92 degrees)
   a. 2" wide white lines
   b. White in color

c. Outside the recessed throwing circle and from outer edge of throw circle to the end of the 28m sector

3. Paint 1" wide sector arcs at 12m, 14m, 16m, 18m, 20m, 22m, 24m and 26m with labels down the right sector line

KK. Discus Throw

1. Dividing lines
   a. 2" wide lines
   b. Black in color
   c. Extend 2.46' (75cm) from outer edge of throw circle
   d. The 2” line is painted toward the top half of the circle, in the direction of throwing (the athlete must exit from the rear half of the circle)
2. Sector lines (34.92 degrees)
   a. 2" wide white lines
   b. Black in color
   c. Outside the recessed throwing circle and from outer edge of throw circle to the hanging net/curtain suspended from the ceiling

LL. Jogging Lane

1. Paint the jogging lane, 5’ wide, around the outside perimeter of the track oval, distance of 250 meters with 20cm rule (no portable curb).
2. Paint finish line at PC

MM. Wicket Lane for Training Hurdles

1. Painted lane is 5’ wide and aligns with the jogging lane, men’s and women’s hurdle tics marks are 48” apart and centered on the Jogging Lane, TBD via the shop drawings

NN. High Jump – This event does NOT have any painted lines.

END OF SECTION 13 1823.41

SECTION 13 1823.42 - TRACK & FIELD EVENT MATERIALS

PART 1 - GENERAL

1.1 SUMMARY

A. This section covers all labor and materials required to install high quality track & field event special materials by the SSC. The SSC is responsible for installing:

1. Sand for the long and triple jump sand pits.

1.2 CODES AND STANDARDS

A. Codes and standards follow the current guidelines set forth by the National Collegiate Athletic Association. Where discrepancies or deficiencies are noted between these various governing bodies, the NCAA notes that for technical information it yields to the WA Facilities Manual.

1.3 ABREVIATIONS

A. WA = World Athletics (formerly IAAF)

B. NCAA = National Collegiate Athletic Association

C. NFHS = National Federation of State High School Associations

D. T&F = Track & Field

E. SS = Synthetic Surface

F. SSC = Synthetic Surfacing Contractor

G. GC = General Contractor

1.4 RELATED WORK

A. Drawings and general provisions of the Contract, including General and Supplementary Conditions and other Division-1 Specification Sections, apply to this Section. The following Sections are specifically related to each other:
1. Section 11 6833.43 – Track & Field Equipment
2. Section 13 1823.40 – Track & Field Banked System
3. Section 13 1823.41 – Track & Field Line Markings
4. Section 13 1823.42 – Track & Field Event Materials
5. Section 13 1823.44 – Track & Field NCAA Certification

1.5 SUBMITTALS

A. The following information must be submitted by the SSC prior to installation.
1. Installation process and requirements for the special materials and any conditions that may limit the installation or affect quality of installation.
2. Material safety data sheets on all products, as necessary.
3. SSC to supply Design Team with a one-half gallon sample of product for visual inspection and testing.

1.6 QUALITY ASSURANCE

A. The physical make-up of these products varies across the country; therefore, the GC shall use his best efforts to supply the Design Team with a product that best meets the specifications listed below.

PART 2 - PRODUCTS

2.1 SAND FOR LONG & TRIPLE JUMP SAND PITS

A. All sand for the long/triple jumps sand pits shall follow the specifications outlined by the United States Golf Association (USGA) guidelines for Bunker Sand.

B. GC may wish to contact the local golf course or country club and the green superintendent should be able to tell you where to find this high-quality sand.

C. Sand shall be white in color (as white as possible for that region of the country), free of trash, organic matter, clay, silt, rocks, etc.

D. The sand shall be washed and sized to meet the USGA Bunker Sand or as a sample the below requirements.

E. Particle size and distribution:
1. Total sand content shall be ≥ 95%
2. Total combined silt and clay content shall be ≤ 5%
3. Screen Number 10 (2.0mm): < 3% Retained
4. Screen Number 18 (1.0mm): < 10% Retained
5. Screen Number 35 (0.5mm) and Screen Number 60 (0.25mm): > 60% Combined Retained
6. Screen Number 100 (0.15mm): < 20% Retained (recommend < 25% Retained)
7. Screen Number 270 (0.05mm): < 5% Retained

F. Particle Sphericity & Angularity:
1. Medium sphericity
2. Sub-angular to sub-rounded

G. Infiltration Rate:
1. Water permeability or infiltration rate shall be > 20 inches/hour

H. Penetrometer Value:
1. Penetrometer value shall be > 1.8kg/cm^3

PART 3 - EXECUTION

3.1 INSPECTION AND ACCEPTANCE

A. Examine all surfaces and contiguous elements to receive work of this section and correct, as part of the Work of this Contract, any defects affecting installation.

B. Commencement of work will be construed as complete acceptability of surfaces and contiguous elements.

3.2 INSTALLATION REQUIREMENTS

A. The following installation requirements must be met by the SSC:
1. These materials should be one of the last items installed on the facility to maintain the physical properties. Keep newly installed materials clean and free from debris.
2. Upon completion of installation, test materials to demonstrate satisfactory operation acceptable to Owner. The SSC shall clean or replace unsuitable or contaminated materials.

END OF SECTION 13 1823.42

SECTION 13 1823.43 – TRACK & FIELD NCAA CERTIFICATION

PART 1 - GENERAL

1.1 SUMMARY

A. This section covers all labor and materials required to provide certification of the final track & field facility. The SSC is responsible for completing all survey & certification work.

1.2 CODES AND STANDARDS

A. The survey work must be completed by a licensed land surveyor or professional engineer.

B. Codes and standards follow the current guidelines set forth by the National Collegiate Athletic Association. Where discrepancies or deficiencies are noted between these various governing bodies, the NCAA notes that for technical information it yields to the WA Facilities Manual.

1.3 ABREVIATIONS

A. WA = World Athletics

B. NCAA = National Collegiate Athletic Association

C. NFHS = National Federation of State High School Associations

D. T&F = Track & Field

E. SS = Synthetic Surface

F. SSC = Synthetic Surfacing Contractor

G. SSM = Synthetic Surfacing Manufacturer

H. GC = General Contractor

1.4 RELATED SECTIONS

A. Drawings and general provisions of Contract, including General and Supplementary Conditions and other Division-1 Specification Sections, apply to this Section. The following Sections are specifically related to each other:
1. Section 116833.43 – Track & Field Equipment
2. Section 131823.40 – Track & Field Banked System
3. Section 131823.41 – Track & Field Line Markings
4. Section 131823.42 – Track & Field Event Materials
5. Section 131823.44 – Track & Field NCAA Certification

PART 2 - CERTIFICATION SURVEY

2.1 FACILITY INFORMATION

A. Owner: _____

B. Facility Name: _____

C. Location: _____

2.2 SURVEYOR / ENGINEER INFORMATION

A. Firm Name: _____

B. Contact: _____

C. Phone #: _____

D. Registration: _____

2.3 SURVEY INFORMATION

A. Date of Survey: _____

B. Indoor Temperature: _____

PART 3 - TRACK OVAL MEASUREMENTS

3.1 All measurements and calculations to 0.001m

3.2 The stated running events cannot exceed +0.01% x length of race; the size of 200m oval shall not be less than 200.000 (+0.040m or 200.040m in length)

3.3 Raised aluminum curb (Y/N): _____

A. Note: measure line at 30cm for raised curb and 20cm for no curb

3.4 Radius to measure line: _____

3.5 Distance between radius points: _____

3.6 Oval - lane 1 distance: _____

3.7 Oval Lane Widths

A. Note: lanes shall have the same width of 1.067m (42”) including the white line to the right (+/- 1cm)

Oval Lane Widths						
Location	**1**	**2**	**3**	**4**	**5**	**6**
Ctr of Main Straight						
Ctr of Turn 1						
Ctr of Back Straight						
Ctr of Turn 2						

3.8 Track Oval – Lateral Slope

A. Note: maximum lateral slope across the full width of the track oval on the straight shall not exceed 1.0%

B. Lane 1 shall be at the same elevation all the way around the oval

C. Slope from outside lane to inside lane 1 (Y/N): _____

D. Angle of banking at the highest point, not to exceed 12.0 degrees: _____

E. Elevation shots taken on the right-hand edge of lane 1 to the right-hand edge of outer lane

Oval Location	Max	Lateral Incline
Center of main straight	1.0%	
Middle of Turn 1	12.0°	
Center of back straight	1.0%	
Middle of Turn 2	12.0°	

3.9 Sprint Lanes Widths

A. Note: lanes shall have the same width of 1.22m (48”) including the white line to the right (+/- 1cm)

60 Meters								
Location	**1**	**2**	**3**	**4**	**5**	**6**	**7**	**8**
At Start Line								
At 30 Meters								
At Finish Line								

B. Sprint Lanes – Lateral Inclination
   1. Maximum lateral inclination/slope across the full width of the sprint lanes shall not exceed 1.0%

Sprint Lanes	Max	Lateral Inclination
55 meter Start Line	1.0%	
60 meter Start Line	1.0%	
Finish Line	1.0%	

C. Sprint Lanes – Overall Direction of Running Inclination
   1. Maximum downward inclination/slope in the direction of running shall not exceed 0.1% over the entire length of the event

Sprint Lanes	Max	Inclination
55m Start Line to Finish Line	0.1%	
60m Start Line to Finish Line	0.1%	

PART 4 - FIELD EVENT MEASUREMENTS AND MARKINGS

4.1 NOTES:
   A. All entries to be in meters unless otherwise noted
   B. No event distance can be less than the stated event
   C. Races run on straightaway – distance shall be measured in a straight line from the starting line to the finish line.

Event	**Range**	**1**	**2**	**3**	**4**	**5**	**6**	**7**	**8**

55m	55.000-55.006								
60m	60.000-60.006								
200m	200.000-200.020								
300m	300.000-300.030								
400m	400.000-400.040								
500m	500.000-500.050								
600m	600.000-600.060								
800m	800.000-800.080								
1000m	1000.000-1000.100								
4 x 200m 3-Turn	800.000-800.080								
4 x 400m 2-Turn	1600.000-1600.160								

4.2 WATERFALL STARTING LINES

A. Box alley for inner lanes is the same as the main waterfall start line

1. Curved start line is painted properly: yes / no _____

B. Box alley for outer lanes is lanes 4, 5 & 6

1. Curved start line is painted properly: yes / no _____

4.3 RELAY RACES – Measured distance of exchange zones

A. Note: WA to add +/- 2cm tolerance to the exchange zone

B. 4 x 200m Relay is a 3-turn stagger

C. 4 x 400m Relay is a 2-turn stagger

Event							
4x200m	**Rule**	**1**	**2**	**3**	**4**	**5**	**6**
Zone Length of 1st Exchange	20m						
Zone Length of 2nd & 3rd Exchanges	20m						
4x400m	**Rule**	**1**	**2**	**3**	**4**	**5**	**6**
Zone Length	20m						

4.4 HURDLE EVENTS

A. Hurdle 1 is the distance of start to first hurdle

B. Hurdle 2-5 is the distance between hurdles
C. Hurdle 5 is the distance of last hurdle to finish line
D. WA allows hurdle marks tolerance of +/- 0.01m

Men 55 / 60 mh		Lane							
Hurdle	**Rule**	**1**	**2**	**3**	**4**	**5**	**6**	**7**	**8**
1	13.72								
2	9.14								
3	9.14								
4	9.14								
5	4.72/9.72								
Women 55 / 60mh		Lane							
Hurdle	**Rule**	**1**	**2**	**3**	**4**	**5**	**6**	**7**	**8**
1	13.00								
2	8.50								
3	8.50								
4	8.50								
5	8.00/13.00								

4.5 POLE VAULT

A. Rules:
1. Recommended runway width 1.22m (+/- 0.01m)
2. Minimum runway length of 40m and optimum length of 45m, measured from the back of the vault box or zero line to end of runway

Runway		
Location/Direction of Runway	**Length (m)**	**Width (m)**
1.		
2.		
3.		
4.		

B. Runway Markings
1. Line width of 5cm
2. Short line length of 30cm
3. Long line length of 90cm
4. Distance: the distance from the edge of the long line closest to the landing pit to the point where the back of the vaulting box meets the runway is 3.65m. Each line is 30cm from the same respective point of an adjacent line
5. Are the markings painted as per the NCAA rule book: yes / no _____

C. Lateral Inclination

1. Rule: Maximum lateral inclination/slope across the full width of runways shall not exceed 1.0%

Location	**Max**	**Runway 1**	**Runway 2**	**Runway 3**	**Runway 4**
40m	1.0%				
Box	1.0%				

D. Overall Inclination in the Direction of Running
1. Rule: Maximum downward inclination/slope in the direction of running shall not exceed 0.1% over the entire length of the runway, not to exceed 40 meters

Event	**Max**	**Runway 1**	**Runway 2**	**Runway 3**	**Runway 4**
Pole Vault	0.1%				

4.6 LONG & TRIPLE JUMP

A. Rules:
1. Recommended width 1.22m (+/- 1cm)
2. Minimum length 40m (131.234ft.) from take-off board (foul line) furthest from sand pit
3. Distance between long jump takeoff board and the nearer edge of the landing area shall not be less than 1m or greater than 3m.
4. Distance between the foul line and the farther edge of the landing area shall be at least 10m.
5. Distance from nearest edge of landing area to the triple jump foul line
   a. Men's: 11m (min) and 12.5m (recommended)
   b. Women's: 8.5m (min.) and 11m (recommended)
6. Depth of sand shall not be less than 30cm (11.81 inches)

Runways						
			Takeoff Boards (Distance in meters from foul line to nearest edge of sand)			
Location/Direction of Runway	**Length (m)**	**Width (m)**	**Board 1**	**Board 2**	**Board 3**	**Board 4**
1.						
2.						
3.						
4.						

B. Sand Pit Width
1. Sand pit #1 inside width (2.75m – 3.0m): _____
2. Sand pit #2 inside width (2.75m – 3.0m): N/A_____
3. Sand pit #3 inside width (2.75m – 3.0m): N/A_____
4. Sand pit #4 inside width (2.75m – 3.0m): N/A_____

C. Runway - Lateral Inclination

1. Rule: Maximum lateral inclination/slope across the full width of runways shall not exceed 1.0%

Location	**Max**	**Runway 1**	**Runway 2**	**Runway 3**	**Runway 4**
40m	1.0%				
LJ Board	1.0%				
W-TJ Board	1.0%				
M-TJ Board	1.0%				

D. Runway - Overall Inclination in the Direction of Running
1. Rule: Maximum downward inclination/slope in the direction of running shall not exceed 0.1% over the entire length of the runway

Event	**Max**	**Runway 1**	**Runway 2**	**Runway 3**	**Runway 4**
40m to LJ Board	0.1%				
40m to W-TJ Board	0.1%				
40m to M-TJ Board	0.1%				

4.7 HIGH JUMP
A. Rules:
1. The maximum overall downward inclination of the last 15 meters shall not exceed 1:250 or 0.4%, in the running direction toward the center of the crossbar
2. The minimum overall length shall be 15m.
3. Takeoff area shall be a semicircle enclosed by a 3m radius, whose center point is directly under the center of the crossbar

Runway		
Location	**Max %**	**High Jump Approach**
Last 15m of Approach	0.4%	
Last 15m of Approach	0.4%	

4.8 Shot Put & Weight Throw
A. Rules:
1. Throwing circles level (Y/N): _____
2. The interior of the throw circles to be between 13.0 – 25.0 millimeters lower than the surface outside the circle
3. The diameter of the shot put throw circle to be between 2.130 - 2.140 meters
4. Maximum downward inclination in the direction of throwing shall not exceed 0.1% over the entire length of the event
5. Sector Line Angle to be 34.92 degrees (WA allows between 34.78° to 35.05°)
6. Dividing lines shall be 29.53 inches long by 2 inches wide

Shotput & Weight Area

Location	Sector Line Angle (degrees)	Circle Depth (mm)	Circle Diameter (m)	Landing Area Incline %
1. Circle #1				
2. Circle #2				

END OF SECTION 13 1823.43

SECTION 133419 - METAL BUILDING SYSTEMS

PART 1 - GENERAL

1.1 RELATED DOCUMENTS

A. Drawings and general provisions of the Contract, including General and Supplementary Conditions and Division 01 Specification Sections, apply to this Section.

1.2 SUMMARY

A. This Section includes design, shop-fabrication and erection of pre-engineered steel building structural frame, as shown on drawings including plans, notes and details showing size and location of members.

B. Section Includes:

1. Structural-steel framing.
2. Metal roof panels.
3. Metal wall panels.
4. Metal soffit panels.
5. Thermal insulation.
6. Accessories.

C. Work supplied but installed under other Sections:

1. Division 3 Section “Cast-in-Place Concrete” for anchor bolts.

D. Related Sections: The following Sections contain requirements that relate to this Section:

1. Division 1 Section “Structural Inspection.”
2. Division 3 Section “Cast-in-Place Concrete.”
3. Division 8 Section “Overhead Coiling Doors.”
4. Division 9 Section “Painting.”
5. Division 13 Section “Pre-Engineered Building Components.”

E. Related Requirements:

1. Section 07 7253 "Snow Guards" for prefabricated devices designed to hold snow on the roof surface.
2. Section 08 3323 "Overhead Coiling Doors" for coiling vehicular doors in metal building systems.
3. Division 8 Section “Aluminum-Framed Entrances and Storefronts” for windows.
4. Division 8 Section “Hollow Metal Doors and Frames” for personnel doors & frames.

1.3 DEFINITIONS

A. Terminology Standard: See MBMA's "Metal Building Systems Manual" for definitions of terms for metal building system construction not otherwise defined in this Section or in referenced standards.

B. IAS: International Accreditation Service.

1.4 COORDINATION

A. Coordinate sizes and locations of concrete foundations and casting of anchor-rod inserts into foundation walls and footings. Anchor rod installation, concrete, reinforcement, and formwork requirements are specified in Section 03 3000 "Cast-in-Place Concrete."

B. Coordinate metal panel assemblies with rain drainage work, flashing, trim, and construction of supports and other adjoining work to provide a leakproof, secure, and noncorrosive installation.

1.5 PREINSTALLATION MEETINGS

A. Preinstallation Conference: Conduct conference at Project site.
   1. Review methods and procedures related to metal building systems including, but not limited to, the following:
      a. Condition of foundations and other preparatory work performed by other trades.
      b. Structural load limitations.
      c. Construction schedule. Verify availability of materials and erector's personnel, equipment, and facilities needed to make progress and avoid delays.
      d. Required tests, inspections, and certifications.
      e. Unfavorable weather and forecasted weather conditions and impact on construction schedule.
   2. Review methods and procedures related to metal roof panel assemblies including, but not limited to, the following:
      a. Compliance with requirements for purlin and rafter conditions, including flatness and attachment to structural members.
      b. Structural limitations of purlins and rafters during and after roofing.
      c. Flashings, special roof details, roof drainage, roof penetrations, equipment curbs, and condition of other construction that will affect metal roof panels.
      d. Temporary protection requirements for metal roof panel assembly during and after installation.
      e. Roof observation and repair after metal roof panel installation.
   3. Review methods and procedures related to metal wall panel assemblies including, but not limited to, the following:
      a. Compliance with requirements for support conditions, including alignment between and attachment to structural members.
      b. Structural limitations of girts and columns during and after wall panel installation.
      c. Flashings, special siding details, wall penetrations, openings, and condition of other construction that will affect metal wall panels.
      d. Temporary protection requirements for metal wall panel assembly during and after installation.
      e. Wall observation and repair after metal wall panel installation.

1.6 PERFORMANCE REQUIREMENTS

A. Structural Performance: Engineer, fabricate, and install pre-engineered structural steel frame to withstand design loadings indicated within limits and under conditions required.

   1. The design of the pre-engineered building frame shall be in accordance with the 2018 Kentucky Building Code, 2nd Edition (2018 KBC) (2015 International Building Code).
   2. Manufacturer shall use contract drawing information indicating maximum depth, size, and spacing limitations.
   3. The magnitude of the structure’s mass dead load (W) for seismic calculations shall be determined by the engineer responsible for the design of the pre-engineered building structure. The pre-engineered building structure is the sole lateral force resisting system and shall be designed as such. All components of the building including, but not limited to,

mechanical units and piping, ceiling components, interior partitions, etc. shall be considered when calculating W.

4. Pre-engineered building frame supplier shall design and provide connections for conventional structural steel members framed into the pre-engineered building columns.

B. Engineering Responsibility: Engage a fabricator who uses a qualified professional engineer to prepare design calculations, shop drawings, and other structural data.

C. Wind loads shall be in accordance with chapter 16 of the 2018 KBC, chapters 26 through 30 of the ASCE 7-10 Minimum Design Loads for Buildings and Other Structures, and the following:

1. Ultimate Design Wind Speed: 120 mph
2. Nominal Design Wind Speed: 93 mph
3. Risk Category: III
4. Exposure category: C
5. Enclosure Classification: Enclosed
6. Internal Pressure Coefficient: + 0.18

D. Seismic loads shall be in accordance with chapter 16 of the 2018 Kentucky Building Code, chapters 11 and 12 of ASCE 7-10 Minimum Design Loads for Buildings and Other Structures, and the following:

1. Seismic Risk Category: III
2. Importance factor: 1.25
3. Site Class: C
4. Short period mapped spectral acceleration (SS): 0.188
5. 1 second period mapped spectral acceleration (S1): 0.091
6. Design for structural systems not complying with AISC-Seismic Provisions for Structural Steel Buildings (where allowed by the 2018 KBC) shall utilize Response Modification Coefficient, System Overstrength Factor, and Deflection Amplification Factor for “Structural Steel Systems Not Specifically Detailed for Seismic Resistance” as shown in Kentucky Building Code Table 1617.6.

E. Snow loads shall be in accordance with chapter 16 of the 2018 KBC, chapter 7 of ASCE 7-10 Minimum Design Loads for Buildings and Other Structures, and the following:

1. Importance factor: 1.10
2. Exposure factor: 1.0
3. Thermal factor: 1.0
4. Ground snow load: 15 psf

F. Live loads shall be in accordance with the 2018 KBC. Live loads on roofs shall not be reduced for tributary live load reduction.

G. Dead loads shall include the self-weight of the pre-engineered building components, any roof supported mechanical equipment, and a collateral dead load of 8 psf for dead load imposed by ceilings, lights, mechanical ductwork, etc.

H. Building drift shall be limited to a maximum of H/180, where H equals the building height, for load combinations which include wind. Drift limitations for seismic loading shall be as defined in the Kentucky Building Code.

I. Deflection of structural members shall be limited to the following:

1. Wind spandrel beams: Horizontal deflection of L/180 due to wind load, where L is the member length.
2. Wind girts and wind columns: Horizontal deflection of L/180 due to wind load, where L is the member length.
3. Primary and Secondary roof framing members: L/120 due to total load and L/180 due to live load, where L is the member length or horizontal distance from eave to eave.
4. Design secondary-framing system to accommodate deflection of primary framing and construction tolerances, and to maintain clearances at openings.

J. Thermal Movements: Allow for thermal movements resulting from the following maximum change (range) in ambient and surface temperatures by preventing buckling, opening of joints, overstressing of components, failure of joint sealants, failure of connections, and other detrimental effects. Base engineering calculations on surface temperatures of materials due to both solar heat gain and nighttime-sky heat loss when subjected to a temperature range of 125 degrees F.

1.7 ACTION SUBMITTALS

A. General: Furnish submittals in quantity, format, and other Conditions of the Contract and as specified in Division 1 of the Project Manual.

1. Shop drawings which show the Architect's or Engineer's title block, logo and/or seal will be rejected and returned unchecked.
2. Computer generated electronic structural construction document files (ACAD) will be made available to the Contractor. The Contractor will be required to sign the Engineer's standard release of liability form and pay a handling fee of $50.00 per drawing prior to receiving the drawing files.
3. Shop drawing resubmittals are reviewed for conformance with review marks only. Any changes or questions originating on a resubmittal shall be clearly clouded.
4. Architect's and Engineer's review of the calculations is for general conformance with the contract documents. Actual calculations are the responsibility of the Metal Building System design engineer and shall not be reviewed for content or accuracy by the Architect or Engineer.

B. Building Permit Issuance: Contractor shall submit Anchor Bolt Plans and Reactions, calculations, and Shop Drawings to the Building Official. Submittal must be signed and sealed by a professional engineer registered in the state where the project is situated. Submittal typically must be received prior to processing of the building permit by the plans reviewer.

C. Product Data: For each type of metal building system component.

1. Include construction details, material descriptions, dimensions of individual components and profiles, and finishes for the following:
2. Metal roof panels.
3. Metal wall panels.
4. Metal soffit panels.
5. Thermal insulation and vapor-retarder facings.
6. Window framing.

D. Anchor-Bolt Plans: Submit anchor-bolt plans and templates before foundation work begins.

1. Provide setting drawings, templates, and directions for installation of anchor rods and other anchorages.
2. Include location, diameter, and projection of anchor bolts required to attach metal building to foundation.

3. Indicate design criteria and loading (wind, snow, seismic, live) as specified in section 1603 of the Kentucky Building Code on the shop drawing cover sheet.
4. Provide foundation reactions for each load type.

E. Shop Drawings detailing fabrication and erection of pre-engineered building structural components. Include construction details, material descriptions, dimensions of individual components and profiles, and finishes.

1. Indicate profiles, sizes, spacing, and locations of structural members, connections, attachments, openings, fasteners, and ASTM specifications for materials.
2. Indicate field welds by standard AWS symbols, showing size, length, and type of each weld.
3. Indicate type, size, and length of bolts, distinguishing between shop and field bolts. Include erection plans and details.
4. Include ASTM material specifications and grade of steel.
5. Provide erection details of all field connections.
6. Metal Roof and Wall Panel Layout Drawings: Show layouts of panels including methods of support. Include details of edge conditions, joints, panel profiles, corners, anchorages, clip spacing, trim, flashings, closures, and special details. Distinguish between factory- and field-assembled work; show locations of exposed fasteners.
   a. Show roof-mounted items including equipment supports, pipe supports and penetrations, and items mounted on roof curbs.
   b. Show wall-mounted items including personnel doors, windows, and louvers.
7. Indicate surface preparation for primer, primer, and galvanizing to be used.
8. Accessory Drawings: Include details of the following items, at a scale of not less than 1 inch per 12 inches
   a. Flashing and trim.
   b. Gutters.
   c. Downspouts.
9. To the extent pre-engineered building design considerations are indicated as fabricator's responsibility, provide shop drawings signed and sealed by the qualified professional engineer, registered in the State of Kentucky, responsible for their preparation. The shop drawings will be reviewed for design intent only. Engineering and detailing shall be solely the responsibility of the manufacturer and the professional engineer responsible for their preparation. Include analysis data indicating compliance with performance requirements and design data signed and sealed by the qualified professional engineer responsible for their preparation.
10. Shop drawing resubmittals are reviewed for conformance with review marks only. Any changes or questions originating on a resubmittal shall be clearly clouded.

F. Samples for Initial Selection: For units with factory-applied finishes.

G. Samples for Verification: For the following products:

1. Panels: Nominal 12 inches long by actual panel width. Include fasteners, closures, and other exposed panel accessories.
2. Flashing and Trim: Nominal 12 inches long. Include fasteners and other exposed accessories.
3. Vapor-Retarder Facings: Nominal 6-inch- square Samples.
4. Accessories: Nominal 12-inch- long Samples for each type of accessory.

1.8 INFORMATIONAL SUBMITTALS

A. General: Furnish submittals in quantity, format, and other Conditions of the Contract and as specified in Division 1 of the Project Manual.

B. Fabricator shall participate in the certified Quality Certification Program and shall submit, at the completion of fabrication, a certificate of compliance stating that the work was performed in accordance with the approved construction documents.

C. Metal Building System Certificates: For each type of metal building system, from manufacturer.

1. Letter of Design Certification in subparagraph below is useful in ensuring compliance with requirements and in comparing competitive quotes from several manufacturers. MBMA's "Metal Building Systems Manual" expressly excludes compliance with codes except as noted in Letter of Design Certification.
   a. Letter of Design Certification: Signed and sealed by a qualified professional engineer. Include the following:
   b. Name and location of Project.
   c. Order number.
   d. Name of manufacturer.
   e. Name of Contractor.
   f. Building dimensions including width, length, height, and roof slope.
   g. Indicate compliance with AISC standards for hot-rolled steel and AISI standards for cold-rolled steel, including edition dates of each standard.
   h. Governing building code and year of edition.
   i. Design Loads: Include dead load, roof live load, collateral loads, roof snow load, deflection, wind loads/speeds and exposure, seismic design category or effective peak velocity-related acceleration/peak acceleration, and auxiliary loads (cranes).
   j. Load Combinations: Indicate that loads were applied acting simultaneously with concentrated loads, according to governing building code.
   k. Building-Use Category: Indicate category of building use and its effect on load importance factors.

D. IAS Certification: Copy of IAS certification.

E. Erector Certificates: For qualified erector, from manufacturer.

F. Material Test Reports: For each of the following products:
   1. Structural steel including chemical and physical properties.
   2. Bolts, nuts, and washers including mechanical properties and chemical analysis.
   3. Tension-control, high-strength, bolt-nut-washer assemblies.
   4. Shop primers.
   5. Non-shrink grout.

G. Source quality-control reports.

H. Field quality-control reports.

I. Surveys: Show final elevations and locations of major members. Indicate discrepancies between actual installation and the Contract Documents. Have surveyor who performed surveys certify their accuracy.

J. Sample Warranties: For special warranties.

1.9 CLOSEOUT SUBMITTALS

A. Maintenance Data: For metal panel finishes to include in maintenance manuals.

1.10 QUALITY ASSURANCE

A. Manufacturer Qualifications: A qualified manufacturer.

1. Accreditation: Manufacturer's facility accredited according to the International Accreditation Service's AC472, "Accreditation Criteria for Inspection Programs for Manufacturers of Metal Building Systems."
2. Engineering Responsibility: Preparation of comprehensive engineering analysis and Shop Drawings by a professional engineer who is legally qualified to practice in jurisdiction where Project is located.

B. Installer Qualifications: Engage an experienced Installer who has completed pre-engineered building structure work similar in material, design, and extent to that indicated for this Project and with a record of successful in-service performance.

C. Erector Qualifications: An experienced erector who specializes in erecting and installing work similar in material, design, and extent to that indicated for this Project and who is acceptable to manufacturer.

D. Welding Qualifications: Qualify procedures and personnel according to the following:

1. AWS D1.1/D1.1M, "Structural Welding Code - Steel."
2. AWS D1.3, "Structural Welding Code - Sheet Steel."

E. Land Surveyor Qualifications: A professional land surveyor who practices in jurisdiction where Project is located and who is experienced in providing surveying services of the kind indicated.

F. Professional Engineer Qualifications: A professional engineer who is legally authorized to practice in the State of Kentucky and who is experienced in providing engineering services of the kind indicated. Engineering services are defined as those performed for projects with structural steel framing that are similar to that indicated for this Project in material, design, and extent.

G. Comply with applicable provisions of the following specifications and documents:

1. AISC 360 “Specification for Structural Steel Buildings.”
2. AISC 303 “Code of Standard Practice for Steel Buildings and Bridges.”
3. AISC 341 “Seismic Provisions for Structural Steel Buildings.”
4. Research Council on Structural Connections’ (RCSC) “The Specification for Structural Joints Using High-Strength Bolts, 2009.”
5. American Welding Society’s (AWS) D1.1-2010 “Structural Welding Code – Steel.”
6. ASTM A 6 “Standard Specification for General Requirements for Rolled Structural Steel Bars, Plates, Shapes, and Sheet Piling.”
7. AGA – American Galvanizers Association publication “Recommended Details for Galvanized Structures”.
8. AWS – “AWS Standard for Certification AWS Certified Welders” AWS QC7-93.
9. AISI's "North American Specification for the Design of Cold-Formed Steel Structural Members" for design requirements and allowable stresses.
10. SSPC – Steel Structures Painting Manual, Volume 1 and 2, latest edition.
11. SSPC Surface Preparation Specification, SP1 through SP15.

1.11 PROJECT CONDITIONS

A. Shop Drawings: Comply with established column layout and grid, column base elevation, and frame type shown on the Drawings establishing foundation dimensions.

B. Established Dimensions for Foundations: Install anchor rods per established dimensions on approved anchor-bolt plans, proceeding with fabricating structural framing without field measurements. Coordinate anchor-bolt installation to ensure that actual anchorage dimensions correspond to established dimensions.

1.12 DELIVERY, STORAGE, AND HANDLING

A. Deliver pre-engineered building structure components to Project site in such quantities and at such times to ensure continuity of installation.

B. Deliver components, sheets, panels, and other manufactured items so as not to be damaged or deformed. Package metal panels for protection during transportation and handling.

C. Unload, store, and erect metal panels in a manner to prevent bending, warping, twisting, and surface damage.

D. Store materials to permit easy access for inspection and identification. Keep steel members off ground by using pallets, platforms, or other supports. Protect steel members and packaged materials from erosion and deterioration.

1. Store fasteners in a protected place. Clean and relubricate bolts and nuts that become dry or rusty before use.
2. Do not store materials on structure in a manner that might cause distortion or damage to members or supporting structures. Repair or replace damaged materials or structures as directed.

E. Stack metal panels horizontally on platforms or pallets, covered with suitable weathertight and ventilated covering. Store metal panels to ensure dryness, with positive slope for drainage of water. Do not store metal panels in contact with other materials that might cause staining, denting, or other surface damage.

F. Protect foam-plastic insulation as follows:

1. Do not expose to sunlight, except to extent necessary for period of installation and concealment.
2. Protect against ignition at all times. Do not deliver foam-plastic insulation materials to Project site before installation time.
3. Complete installation and concealment of foam-plastic materials as rapidly as possible in each area of construction.

1.13 FIELD CONDITIONS

A. Weather Limitations: Proceed with panel installation only when weather conditions permit metal panels to be installed according to manufacturers' written instructions and warranty requirements.

1.14 WARRANTY

A. Special Warranty on Metal Panel Finishes: Manufacturer agrees to repair finish or replace metal panels that show evidence of deterioration of factory-applied finishes within specified warranty period.
1. Exposed Panel Finish: Deterioration includes, but is not limited to, the following:
a. Color fading more than 5 Hunter units when tested according to ASTM D2244.
b. Chalking in excess of a No. 8 rating when tested according to ASTM D4214.
c. Cracking, checking, peeling, or failure of paint to adhere to bare metal.
2. Finish Warranty Period: 20 years from date of Substantial Completion.

B. Special Weathertightness Warranty for Standing-Seam Metal Roof Panels: Manufacturer agrees to repair or replace standing-seam metal roof panel assemblies that leak or otherwise fail to remain weathertight within specified warranty period.
   1. Warranty Period: 20 years from date of Substantial Completion.

PART 2 - PRODUCTS

2.1 MANUFACTURERS

A. Basis of Design Manufacturer: Nucor Building Systems.

B. Manufacturers: Subject to compliance with requirements, [available manufacturers offering products that may be incorporated into the Work include, but are not limited to, the following:

   1. A&S Building Systems, Inc.; Division of NCI Building Systems, L.P.
   2. American Steel Building Co., Inc.
   3. Butler Manufacturing Company; a BlueScope Steel company.
   4. Ceco Building Systems; Division of NCI Building Systems, L.P.
   5. Chief Buildings; Division of Chief Industries, Inc.
   6. Gulf States Manufacturers, Inc.; a Nucor company.
   7. Kirby Building Systems; a Nucor company.
   8. Metallic Building Company; Division of NCI Building Systems, L.P.
   9. Nucor Building Systems.
   10. Star Building Systems; an NCI company.
   11. USA, Inc.
   12. VP Buildings; a United Dominion company.

C. Source Limitations: Obtain metal building system components, including primary and secondary framing and metal panel assemblies, from single source from single manufacturer.

2.2 SYSTEM DESCRIPTION

A. Description: Provide a complete, integrated set of metal building system manufacturer's standard mutually dependent components and assemblies that form a metal building system capable of withstanding structural and other loads, thermally induced movement, and exposure to weather without failure or infiltration of water into building interior

B. Primary Framing: Manufacturer's standard primary-framing system, designed to withstand required loads and specified requirements. Primary framing includes transverse and lean-to frames; rafter, rake, and canopy beams; sidewall, intermediate, end-wall, and corner columns; and wind bracing.

   1. General: Provide frames with attachment plates, bearing plates, and splice members. Factory drill for field-bolted assembly. Provide frame span and spacing indicated.
   2. Primary framing to be prime painted.
   3. Rigid Clear-Span Frames: I-shaped frame sections fabricated from shop-welded, built-up steel plates or structural-steel shapes. Interior columns are not permitted.
   4. Lean-To: Solid-member, structural-framing system without interior columns, designed to be partially supported by another structure.

C. Endwall Framing: Endwall framing shall include the corner columns and endwall columns and wind girts, and shall be manufactured of I-shaped sections fabricated from structural-steel shapes; shop-welded, built-up steel plates; or C-shaped, cold-formed, structural-steel sheet according to the following:

1. Structural members to be prime painted.
2. Load-bearing end-wall and corner columns with rafters capable of supporting the tributary one-half bay design load. Lateral X-bracing of rods are permitted where shown.
3. Load-bearing end-wall and rigid frame capable of supporting the tributary one-half bay design load. Lateral X-bracing rods are permitted where shown.
4. Expandable end-end wall with clear spanning rigid frame and removeable columns capable of supporting a full bay (two times the end bay) loading.

D. Secondary Framing: Manufacturer's standard secondary framing, including purlins, girts, eave struts, flange bracing, base members, gable angles, clips, headers, jambs, and other miscellaneous structural members. Unless otherwise indicated, fabricate framing from either cold-formed, structural-steel sheet or roll-formed, steel sheet to comply with the following:

1. Structural members to be prime painted.
2. Spandrel beams to be I-shaped sections fabricated from structural-steel shapes or shop-welded, built-up steel plates or closed tube sections. Open wide flange sections shall be designed with interior flange as unbraced for compression stresses.
3. Wall girts shall be nominal 8” deep “C” or “Z” shaped members fabricated from built-up steel plates, steel sheet, or structural-steel shapes. Form edges of sections with stiffening lips angled 40 to 50 degrees from flange, with minimum 2-1/2-inch wide flanges. Design as simple span, continuous, or partially continuous for the specified loads. Wall girts shall be fabricated to be run outside the primary frame columns.
4. Roof purlins shall be manufacturer’s standard depth “C” or “Z” shaped members fabricated from built-up steel plates, steel sheet, or structural-steel shapes. Form edges of sections with stiffening lips angled 40 to 50 degrees from flange, with minimum 2-1/2-inch wide flanges. Design as simple span, continuous, or partially continuous for the specified loads.
5. Eave Struts: Unequal-flange, C-shaped sections; fabricated from built-up steel plates, steel sheet, or structural-steel shapes; to provide adequate backup for metal panels.
6. Flange Bracing: Minimum 2-by-2-by-1/8-inch structural-steel angles or 1-inch diameter, cold-formed structural tubing to stiffen primary-frame flanges.
7. Sag Bracing: Minimum 1-by-1-by-1/8-inch structural-steel angles.
8. Base or Sill Angles: Minimum 3-by-2-inch (76-by-51-mm) zinc-coated (galvanized) steel sheet.
9. Purlin and Girt Clips: Manufacturer's standard clips fabricated from steel sheet. Provide galvanized clips where clips are connected to galvanized framing members.
10. Secondary End-Wall Framing: Manufacturer's standard sections.
11. Framing for Openings: Channel shapes; fabricated from cold-formed, structural-steel sheet or structural-steel shapes. Frame head and jamb of door openings and head, jamb, and sill of other openings.
12. Miscellaneous Structural Members: Manufacturer's standard sections fabricated from cold-formed, structural-steel sheet; built-up steel plates; or zinc-coated (galvanized) steel sheet; designed to withstand required loads.
13. Wind bracing shall be a system of diagonal cable bracing. Unless otherwise noted, column bases shall be designed as pinned as to not transfer moment into the foundations.
14. Metal roofing shall be assumed to have zero capacity for diaphragm action. Cable or rod bracing shall be utilized in the plane of the roof to transfer lateral loads into the primary and secondary frames.

E. Canopy Framing: Manufacturer's standard structural-framing system, designed to withstand required loads; fabricated from shop-welded, built-up steel plates or structural-steel shapes. Provide frames with attachment plates and splice members, factory drilled for field-bolted assembly.

1. Type: Purlin-extension type

F. Column Type

1. Straight columns at wind and lean-to columns.
2. Tapered columns at frame columns.

A. Eave Height: 38+/- feet as indicated by nominal height on Drawings. Actual height to be determined by manufacturer and the inside clearance requirements.

B. Bay Spacing: As indicated on Drawings.

C. Roof Slope: As indicated on Drawings.

D. Roof System: Manufacturer's standard standing-seam, vertical-rib, metal roof panels.

E. Exterior Wall System: Manufacturer's standard concealed-fastener, metal wall panels.

2.3 MATERIALS

A. All structural steel shapes shall be new, unused and perfect stock, free from millscale, rust, flake, pitting, and imperfections, without bends, kinks, and distortions.

B. Wide Flange and Tee Shapes (Designated as W and WT): ASTM A36 or ASTM A992.

C. Channels, Angles, M-Shapes, and S-Shapes: ASTM A36.

D. Plates and Bars: ASTM A36; ASTM A572, Grade 50 or 55; or ASTM A529, Grade 50 or 55.

E. Cold-Formed Structural Steel Tubing: ASTM A500, Grade B.

F. Steel Pipe: ASTM A53, Grade B.

G. Structural-Steel Sheet: Hot-rolled, ASTM A 1011, Structural Steel (SS), Grades 30 through 55, or High-Strength Low-Alloy Steel (HSLAS), Grades 45 through 70; or cold-rolled, ASTM A 1008, Structural Steel (SS), Grades 25 through 80, or High-Strength Low-Alloy Steel (HSLAS), Grades 45 through 70. Prime painted [hot dip galvanized].

H. Metallic-Coated Steel Sheet Prepainted with Coil Coating: Steel sheet, metallic coated by the hot-dip process and prepainted by the coil-coating process with clear acrylic to comply with ASTM A 755.

1. Zinc-Coated (Galvanized) Steel Sheet: ASTM A 653, Structural Steel (SS), Grades 33 through 80; or High-Strength Low-Alloy Steel (HSLAS), Grades 50 through 80; with G30 coating designation.

I. Non-High-Strength Bolts, Nuts, and Washers: ASTM A 307, Grade A, carbon-steel, hex-head bolts; ASTM A 563 carbon-steel hex nuts; and ASTM F 844 plain (flat) steel washers.

1. Finish: Plain.

J. High-Strength Bolts, Nuts, and Washers: ASTM A325 or A490, Type 1, heavy hex steel structural bolts; ASTM A563 heavy hex carbon-steel nuts; and ASTM F436 hardened carbon-steel washers.

1. Finish: Plain.

K. Welding Electrodes: Comply with AWS requirements.

L. Finish: Factory primed. Apply specified primer immediately after cleaning and pretreating.

1. Clean and prepare in accordance with SSPC-SP2.
2. Coat with manufacturer's standard primer. Apply primer to primary and secondary framing to a minimum dry film thickness of 1 mil.
    a. Prime secondary framing formed from uncoated steel sheet to a minimum dry film thickness of 0.5 mil on each side.

2.4 PERFORMANCE REQUIREMENTS

A. Delegated Design: Engage a qualified professional engineer, as defined in Section 01 4000 "Quality Requirements," to design metal building system.

B. Structural Performance: Metal building systems shall withstand the effects of gravity loads and the following loads and stresses within limits and under conditions indicated according to procedures in MBMA's "Metal Building Systems Manual."

1. Design Loads: As indicated on Drawings.
2. Deflection and Drift Limits: Design metal building system assemblies to withstand serviceability design loads without exceeding deflections and drift limits recommended in AISC Steel Design Guide No. 3 "Serviceability Design Considerations for Steel Buildings."
3. Deflection and Drift Limits: No greater than the following:
    a. Purlins and Rafters: Vertical deflection of 1/240 of the span.
    b. Girts: Horizontal deflection of 1/180 of the span.
    c. Metal Roof Panels: Vertical deflection of 1/240 of the span.
    d. Metal Wall Panels: Horizontal deflection of 1/180 of the span.
    e. Design secondary-framing system to accommodate deflection of primary framing and construction tolerances, and to maintain clearances at openings.
    f. Lateral Drift: Maximum of 1/200 of the building height.

C. Seismic Performance: Metal building system shall withstand the effects of earthquake motions determined according to ASCE/SEI 7.

D. Thermal Movements: Allow for thermal movements from ambient and surface temperature changes by preventing buckling, opening of joints, overstressing of components, failure of joint sealants, failure of connections, and other detrimental effects. Base calculations on surface temperatures of materials due to both solar heat gain and nighttime-sky heat loss.

1. Temperature Change: 120 deg F, ambient; 180 deg F (100 deg C), material surfaces.

E. Structural Performance for Metal Roof and Wall Panels: Provide metal panel systems capable of withstanding the effects of the following loads, based on testing according to ASTM E1592:

1. Wind Loads: As indicated on Drawings.

F. Air Infiltration for Metal Roof Panels: Air leakage of not more than 0.06 cfm/sq. ft. when tested according to ASTM E1680 at the following test-pressure difference:

1. Test-Pressure Difference: 6.24 lbf/sq. ft..

G. Air Infiltration for Metal Wall Panels: Air leakage of not more than 0.06 cfm/sq. ft. when tested according to ASTM E283 at the following test-pressure difference:

1. Test-Pressure Difference: 6.24 lbf/sq. ft..

H. Water Penetration for Metal Roof Panels: No water penetration when tested according to ASTM E1646 at the following test-pressure difference:

1. Test-Pressure Difference: 6.24 lbf/sq. ft..

I. Water Penetration for Metal Wall Panels: No water penetration when tested according to ASTM E331 at the following test-pressure difference:

1. Test-Pressure Difference: 6.24 lbf/sq. ft..

J. Wind-Uplift Resistance: Provide metal roof panel assemblies that comply with UL 580 for wind-uplift-resistance class indicated.

1. Uplift Rating: UL 90.

K. FM Global Listing: Provide metal roof panels and component materials that comply with requirements in FM Global 4471 as part of a panel roofing system and that are listed in FM Global's "Approval Guide" for Class 1 or noncombustible construction, as applicable. Identify materials with FM Global markings.

1. Fire/Windstorm Classification: Class 1A-90.
2. Hail Resistance: MH.

L. Thermal Performance for Opaque Elements: Provide the following maximum U-factors and minimum R-values when tested according to ASTM C1363 or ASTM C518:

1. Roof:
   a. R-Value: 19.
2. Walls:
   a. R-Value: 19.

2.5 METAL ROOF PANELS

A. Standing-Seam, Vertical-Rib, Metal Roof Panels: Formed with vertical ribs at panel edges and intermediate stiffening ribs symmetrically spaced between ribs; designed for sequential installation by mechanically attaching panels to supports using concealed clips located under one side of panels and engaging opposite edge of adjacent panels.

1. Material: Zinc-coated (galvanized) or aluminum-zinc alloy-coated steel sheet, 0.030-inch nominal uncoated steel thickness. Prepainted by the coil-coating process to comply with ASTM A755/A755M.
   a. Exterior Finish: Two-coat fluoropolymer.
   b. Color: As selected by Architect from manufacturer's full range.
2. Clips: One-piece fixed to accommodate thermal movement.
3. Joint Type: Mechanically seamed.
4. Panel Coverage: 16 inches.
5. Panel Height: 2 inches.

B. Finishes:

1. Exposed Coil-Coated Finish:
   a. Two-Coat Fluoropolymer: AAMA 621. Fluoropolymer finish containing not less than 70 percent PVDF resin by weight in color coat. Prepare, pretreat, and apply coating to exposed metal surfaces to comply with coating and resin manufacturers' written instructions.
2. Concealed Finish: Apply pretreatment and manufacturer's standard white or light-colored acrylic or polyester backer finish, consisting of prime coat and wash coat with a minimum total dry film thickness of 0.5 mil.

2.6 METAL WALL PANELS

A. Type 1: Concealed-Fastener, Flush-Profile, Metal Wall Panels: Formed with vertical panel edges and a double recess panel,; with flush joint between panels; with 1-inch- wide flange for attaching interior finish; designed to be installed by lapping and interconnecting side edges of adjacent panels and mechanically attaching through panel to supports using concealed fasteners and factory-applied sealant in side laps.

1. Basis of Design Product: MBCI Nuwall.

2. Material: Zinc-coated (galvanized) or aluminum-zinc alloy-coated steel sheet, 0.030-inch nominal uncoated steel thickness. Prepainted by the coil-coating process to comply with ASTM A755/A755M.
   a. Exterior Finish: Fluoropolymer.
   b. Color: As selected by Architect from manufacturer's full range.
3. Panel Coverage: 12 inches (406 mm).
4. Panel Height: 2 1/2 inches (76 mm).

B. Type 2: Concealed-Fastener, Flush-Profile, Metal Wall Panels: Formed with vertical panel edges and a single wide recess, centered between panel edges]; with flush joint between panels; with 1-inch- wide flange for attaching interior finish; designed to be installed by lapping and interconnecting side edges of adjacent panels and mechanically attaching through panel to supports using concealed fasteners and factory-applied sealant in side laps.

1. Basis of Design Product: MBCI Shadow Rib.

2. Material: Zinc-coated (galvanized) or aluminum-zinc alloy-coated steel sheet, 0.030-inch nominal uncoated steel thickness. Prepainted by the coil-coating process to comply with ASTM A755/A755M.

   a. Exterior Finish: Fluoropolymer.
   b. Color: As selected by Architect from manufacturer's full range.

3. Panel Coverage: 16 inches (406 mm).
4. Panel Height: [3 inches (76 mm).

C. Finishes:

1. Exposed Coil-Coated Finish:
   a. Retain "Two-Coat Fluoropolymer," "Three-Coat Fluoropolymer," or "Siliconized Polyester" Subparagraph below, or add other finishes to suit Project.

   b. Two-Coat Fluoropolymer: AAMA 621. Fluoropolymer finish containing not less than 70 percent PVDF resin by weight in color coat. Prepare, pretreat, and apply coating to exposed metal surfaces to comply with coating and resin manufacturers' written instructions.

2. Concealed Finish: Apply pretreatment and manufacturer's standard white or light-colored acrylic or polyester backer finish, consisting of prime coat and wash coat with a minimum total dry film thickness of 0.5 mil.

2.7 METAL SOFFIT PANELS

A. General: Provide factory-formed metal soffit panels designed to be installed by lapping and interconnecting side edges of adjacent panels and mechanically attaching through panel to supports using concealed fasteners and factory-applied sealant in side laps. Include accessories required for weathertight installation.

B. Concealed-Fastener, Flush-Profile, Metal Soffit Panels: Formed with vertical panel edges and flush surface; with flush joint between panels; with 1-inch- wide flange for attaching interior finish; designed to be installed by lapping and interconnecting side edges of adjacent panels and mechanically attaching through panel to supports using concealed fasteners and factory-applied sealant in side laps.

1. Material: Zinc-coated (galvanized) or aluminum-zinc alloy-coated steel sheet, 0.030-inch nominal uncoated steel thickness. Prepainted by the coil-coating process to comply with ASTM A755/A755M.

a. Exterior Finish: Fluoropolymer.
b. Color: As selected by Architect from manufacturer's full range.

2. Panel Coverage: 12 inches.
3. Panel Height: 1 inch.

2.8 THERMAL INSULATION

A. Faced Metal Building Insulation: ASTM C991, Type II, glass-fiber-blanket insulation; 0.5-lb/cu. ft. density; 2-inch- wide, continuous, vapor-tight edge tabs; with a flame-spread index of 25 or less.

B. Retainer Strips: For securing insulation between supports, 0.025-inch nominal-thickness, formed, metallic-coated steel or PVC retainer clips colored to match insulation facing.

C. Vapor-Retarder Facing: ASTM C1136, with permeance not greater than 0.02 perm when tested according to ASTM E96/E96M, Desiccant Method.

1. Composition: White polypropylene film facing and fiberglass-polyester-blend fabric backing.

D. Vapor-Retarder Tape: Pressure-sensitive tape of type recommended by vapor-retarder manufacturer for sealing joints and penetrations in vapor retarder.

2.9 ACCESSORIES

A. General: Provide accessories as standard with metal building system manufacturer and as specified. Fabricate and finish accessories at the factory to greatest extent possible, by manufacturer's standard procedures and processes. Comply with indicated profiles and with dimensional and structural requirements.

1. Form exposed sheet metal accessories that are without excessive oil-canning, buckling, and tool marks and that are true to line and levels indicated, with exposed edges folded back to form hems.

B. Roof Panel Accessories: Provide components required for a complete metal roof panel assembly including copings, fasciae, corner units, ridge closures, clips, sealants, gaskets, fillers, closure strips, and similar items. Match material and finish of metal roof panels unless otherwise indicated.

1. Closures: Provide closures at eaves and ridges, fabricated of same material as metal roof panels.
2. Clips: Manufacturer's standard, formed from stainless-steel sheet, designed to withstand negative-load requirements.
3. Cleats: Manufacturer's standard, mechanically seamed cleats formed from stainless-steel sheet or nylon-coated aluminum sheet.
4. Backing Plates: Provide metal backing plates at panel end splices, fabricated from material recommended by manufacturer.
5. Closure Strips: Closed-cell, expanded, cellular, rubber or crosslinked, polyolefin-foam or closed-cell laminated polyethylene; minimum 1-inch- thick, flexible closure strips; cut or premolded to match metal roof panel profile. Provide closure strips where indicated or necessary to ensure weathertight construction.
6. Thermal Spacer Blocks: Where metal panels attach directly to purlins, provide thermal spacer blocks of thickness required to provide 1-inch standoff; fabricated from extruded polystyrene.

C. Wall Panel Accessories: Provide components required for a complete metal wall panel assembly including copings, fasciae, mullions, sills, corner units, clips, sealants, gaskets, fillers, closure strips, and similar items. Match material and finish of metal wall panels unless otherwise indicated.

1. Closures: Provide closures at eaves and rakes, fabricated of same material as metal wall panels.
2. Backing Plates: Provide metal backing plates at panel end splices, fabricated from material recommended by manufacturer.
3. Closure Strips: Closed-cell, expanded, cellular, rubber or crosslinked, polyolefin-foam or closed-cell laminated polyethylene; minimum 1-inch- thick, flexible closure strips; cut or premolded to match metal wall panel profile. Provide closure strips where indicated or necessary to ensure weathertight construction.

D. Flashing and Trim: Zinc-coated (galvanized) or aluminum-zinc alloy-coated steel sheet, 0.018-inch nominal uncoated steel thickness, prepainted with coil coating; finished to match adjacent metal panels.

1. Provide flashing and trim as required to seal against weather and to provide finished appearance. Locations include, but are not limited to, eaves, rakes, corners, bases, framed openings, ridges, fasciae, and fillers.

E. Opening Trim: Zinc-coated (galvanized) or aluminum-zinc alloy-coated steel sheet, 0.018-inch nominal uncoated steel thickness, prepainted with coil coating. Trim head and jamb of door openings, and head, jamb, and sill of other openings.

F. Gutters: Zinc-coated (galvanized) or aluminum-zinc alloy-coated steel sheet, 0.018-inch nominal uncoated steel thickness, prepainted with coil coating; finished to match roof fascia and rake trim. Match profile of gable trim, complete with end pieces, outlet tubes, and other special pieces as required. Fabricate in minimum 96-inch- long sections, sized according to SMACNA's "Architectural Sheet Metal Manual."

1. Gutter Supports: Fabricated from same material and finish as gutters.
2. Strainers: Bronze, copper, or aluminum wire ball type at outlets.

G. Downspouts: Zinc-coated (galvanized) or aluminum-zinc alloy-coated steel sheet, 0.018-inch nominal uncoated steel thickness, prepainted with coil coating; finished to match metal wall panels. Fabricate in minimum 10-foot- long sections, complete with formed elbows and offsets.

1. Mounting Straps: Fabricated from same material and finish as gutters.

H. Materials:

1. Fasteners: Self-tapping screws, bolts, nuts, self-locking rivets and bolts, end-welded studs, and other suitable fasteners designed to withstand design loads. Provide fasteners with heads matching color of materials being fastened by means of plastic caps or factory-applied coating.
   a. Fasteners for Metal Roof Panels: Self-drilling or self-tapping, zinc-plated, hex-head carbon-steel screws, with a stainless-steel cap or zinc-aluminum-alloy head and EPDM sealing washer.
   b. Fasteners for Metal Roof Panels: Self-drilling, Type 410 stainless steel or self-tapping, Type 304 stainless-steel or zinc-alloy-steel hex washer head, with EPDM washer under heads of fasteners bearing on weather side of metal panels.
   c. Fasteners for Metal Wall Panels: Self-drilling or self-tapping, zinc-plated, hex-head carbon-steel screws**,** with EPDM sealing washers bearing on weather side of metal panels.
   d. Fasteners for Metal Wall Panels: Self-drilling, Type 410 stainless steel or self-tapping, Type 304 stainless-steel or zinc-alloy-steel hex washer head**,** with EPDM sealing washers bearing on weather side of metal panels.
   e. Fasteners for Flashing and Trim: Blind fasteners or self-drilling screws with hex washer head.
   f. Blind Fasteners: High-strength aluminum or stainless-steel rivets.
2. Corrosion-Resistant Coating: Cold-applied asphalt mastic, compounded for 15-mil dry film thickness per coat. Provide inert-type noncorrosive compound free of asbestos fibers, sulfur components, and other deleterious impurities.
3. Nonmetallic, Shrinkage-Resistant Grout: ASTM C1107/C1107M, factory-packaged, nonmetallic aggregate grout, noncorrosive, nonstaining, mixed with water to consistency suitable for application and a 30-minute working time.
4. Metal Panel Sealants:
   a. Sealant Tape: Pressure-sensitive, 100 percent solids, gray polyisobutylene-compound sealant tape with release-paper backing. Provide permanently elastic, nonsag, nontoxic, nonstaining tape of manufacturer's standard size.
   b. Joint Sealant: ASTM C920; one part elastomeric polyurethane or polysulfide; of type, grade, class, and use classifications required to seal joints in metal panels and remain weathertight; and as recommended by metal building system manufacturer.

PART 3 - EXECUTION

3.1 FABRICATION

A. General: Design components and field connections required for erection to permit easy assembly.

1. Mark each piece and part of the assembly to correspond with previously prepared erection drawings, diagrams, and instruction manuals.
2. Fabricate structural framing to produce clean, smooth cuts and bends. Punch holes of proper size, shape, and location. Members shall be free of cracks, tears, and ruptures.

B. Tolerances: Comply with MBMA's "Metal Building Systems Manual" for fabrication and erection tolerances.

C. Fabricate and assemble pre-engineered building structure in shop to greatest extent possible.

D. Fabricate building structure components exposed to view with exposed surfaces smooth, square, and free of surface blemishes, including pitting, rust and scale seam marks, roller marks, rolled trade names, and roughness.
   1. Remove blemishes by filling, grinding, or by welding and grinding, prior to cleaning, treating and shop priming.

E. Primary Framing: Shop fabricate framing components to indicated size and section, with baseplates, bearing plates, stiffeners, and other items required for erection welded into place. Cut, form, punch, drill, and weld framing for bolted field assembly.

   1. Make shop connections by welding or by using high-strength bolts.
   2. Join flanges to webs of built-up members by a continuous, submerged arc-welding process.
   3. Brace compression flange of primary framing with steel angles or cold-formed structural tubing between frame web and purlin web or girt web, so flange compressive strength is within allowable limits for any combination of loadings.
   4. Weld clips to frames for attaching secondary framing.

F. Secondary Framing: Shop fabricate framing components to indicated size and section by roll-forming or break-forming, with baseplates, bearing plates, stiffeners, and other plates required for erection welded into place. Cut, form, punch, drill, and weld secondary framing for bolted field connections to primary framing.

   1. Make shop connections by welding or by using non-high-strength bolts.

3.2 EXAMINATION

A. Examine substrates, areas, and conditions, with erector present, for compliance with requirements for installation tolerances and other conditions affecting performance of the Work.

B. Before erection proceeds, survey elevations and locations of concrete- and masonry-bearing surfaces and locations of anchor rods, bearing plates, and other embedments to receive structural framing, with erector present, for compliance with requirements and metal building system manufacturer's tolerances.

   1. Engage land surveyor to perform surveying.

C. Proceed with erection only after unsatisfactory conditions have been corrected.

3.3 PREPARATION

A. Clean and prepare surfaces to be painted according to manufacturer's written instructions for each particular substrate condition.

B. Provide temporary shores, guys, braces, and other supports during erection to keep structural framing secure, plumb, and in alignment against temporary construction loads and loads equal in intensity to design loads. Remove temporary supports when permanent structural framing, connections, and bracing are in place unless otherwise indicated.

3.4 ERECTION

A. Erect metal building system according to manufacturer's written erection instructions and erection drawings.

B. Set pre-engineered building structure accurately in locations and to elevations indicated and according to AISC specifications referenced in this Section.

C. Maintain structural stability of frame during erection.

D. Do not field cut, drill, or alter structural members without written approval from metal building system manufacturer's professional engineer.

E. Base Plates: Clean concrete- and masonry-bearing surfaces of bond-reducing materials, and roughen surfaces prior to setting plates. Clean bottom surface of plates.

1. Set plates for structural members on wedges, shims, or setting nuts as required.
2. Tighten anchor rods after supported members have been positioned and plumbed. Do not remove wedges or shims but, if protruding, cut off flush with edge of plate before packing with grout.
3. Promptly pack grout solidly between bearing surfaces and plates so no voids remain. Neatly finish exposed surfaces; protect grout and allow to cure. Comply with manufacturer's written installation instructions for shrinkage-resistant grouts.

F. Align and adjust structural framing before permanently fastening. Before assembly, clean bearing surfaces and other surfaces that will be in permanent contact with framing. Perform necessary adjustments to compensate for discrepancies in elevations and alignment.

1. Level and plumb individual members of structure.
2. Make allowances for difference between temperature at time of erection and mean temperature when structure will be completed and in service.

G. Primary Framing and End Walls: Erect framing level, plumb, rigid, secure, and true to line. Level baseplates to a true even plane with full bearing to supporting structures, set with double-nutted anchor bolts. Use grout to obtain uniform bearing and to maintain a level base-line elevation. Moist-cure grout for not less than seven days after placement.

1. Make field connections using high-strength bolts installed according to RCSC's "Specification for Structural Joints Using ASTM A 325 or A 490 Bolts" for bolt type and joint type specified.

H. Secondary Framing: Erect framing level, plumb, rigid, secure, and true to line. Field bolt secondary framing to clips attached to primary framing.

1. Provide rake or gable purlins with tight-fitting closure channels and fasciae.
2. Locate and space wall girts to suit openings such as doors and windows.
3. Provide supplemental framing at entire perimeter of openings, including doors, windows, louvers, ventilators, and other penetrations of roof and walls.

I. Bracing: Install bracing in roof and sidewalls where indicated on erection drawings.

1. Tighten rod and cable bracing to avoid sag.
2. Locate interior end-bay bracing only where indicated.

J. Framing for Openings: Provide shapes of proper design and size to reinforce openings and to carry loads and vibrations imposed, including equipment furnished under mechanical and electrical work. Securely attach to structural framing.

K. Maintain erection tolerances of structural steel within AISC's "Code of Standard Practice for Steel Buildings and Bridges."

3.5 METAL PANEL INSTALLATION, GENERAL

A. Fabricate and finish metal panels and accessories at the factory, by manufacturer's standard procedures and processes, as necessary to fulfill indicated performance requirements demonstrated by laboratory testing. Comply with indicated profiles and with dimensional and structural requirements.

B. On-Site Fabrication: Subject to compliance with requirements of this Section, metal panels may be fabricated on-site using UL-certified, portable roll-forming equipment if panels are of same profile and warranted by manufacturer to be equal to factory-formed panels. Fabricate according to equipment manufacturer's written instructions and to comply with details shown.

C. Examination: Examine primary and secondary framing to verify that structural-panel support members and anchorages have been installed within alignment tolerances required by manufacturer.

1. Examine roughing-in for components and systems penetrating metal panels, to verify actual locations of penetrations relative to seams before metal panel installation.

D. General: Anchor metal panels and other components of the Work securely in place, with provisions for thermal and structural movement.

1. Field cut metal panels as required for doors, windows, and other openings. Cut openings as small as possible, neatly to size required, and without damage to adjacent metal panel finishes.
   a. Field cutting of metal panels by torch is not permitted unless approved in writing by manufacturer.
2. Install metal panels perpendicular to structural supports unless otherwise indicated.
3. Flash and seal metal panels with weather closures at perimeter of openings and similar elements. Fasten with self-tapping screws.
4. Locate and space fastenings in uniform vertical and horizontal alignment.
5. Locate metal panel splices over structural supports with end laps in alignment.
6. Lap metal flashing over metal panels to allow moisture to run over and off the material.

E. Metal Protection: Where dissimilar metals contact each other or corrosive substrates, protect against galvanic action by painting contact surfaces with corrosion-resistant coating, by applying rubberized-asphalt underlayment to each contact surface, or by other permanent separation as recommended by metal roof panel manufacturer.

F. Joint Sealers: Install gaskets, joint fillers, and sealants where indicated and where required for weatherproof performance of metal panel assemblies. Provide types of gaskets, fillers, and sealants indicated; or, if not indicated, provide types recommended by metal panel manufacturer.

1. Seal metal panel end laps with double beads of tape or sealant the full width of panel. Seal side joints where recommended by metal panel manufacturer.
2. Prepare joints and apply sealants to comply with requirements in Section 07 9200 "Joint Sealants."

3.6 METAL ROOF PANEL INSTALLATION

A. General: Provide metal roof panels of full length from eave to ridge unless otherwise indicated or restricted by shipping limitations.

1. Install ridge caps as metal roof panel work proceeds.

2. Flash and seal metal roof panels with weather closures at eaves and rakes. Fasten with self-tapping screws.

B. Standing-Seam Metal Roof Panels: Fasten metal roof panels to supports with concealed clips at each standing-seam joint, at location and spacing and with fasteners recommended by manufacturer.

1. Install clips to supports with self-drilling or self-tapping fasteners.
2. Install pressure plates at locations indicated in manufacturer's written installation instructions.
3. Snap Joint: Nest standing seams and fasten together by interlocking and completely engaging factory-applied sealant.
4. Seamed Joint: Crimp standing seams with manufacturer-approved motorized seamer tool so that clip, metal roof panel, and factory-applied sealant are completely engaged.
5. Rigidly fasten eave end of metal roof panels and allow ridge end free movement for thermal expansion and contraction. Predrill panels for fasteners.
6. Provide metal closures at peaks, rake walls and each side of ridge caps.

C. Metal Fascia Panels: Align bottom of metal panels and fasten with blind rivets, bolts, or self-drilling or self-tapping screws. Flash and seal metal panels with weather closures where fasciae meet soffits, along lower panel edges, and at perimeter of all openings.

D. Metal Roof Panel Installation Tolerances: Shim and align metal roof panels within installed tolerance of 1/4 inch in 20 feet on slope and location lines and within 1/8-inch offset of adjoining faces and of alignment of matching profiles.

3.7 METAL WALL PANEL INSTALLATION

A. General: Install metal wall panels in orientation, sizes, and locations indicated on Drawings. Install panels perpendicular to girts, extending full height of building, unless otherwise indicated. Anchor metal wall panels and other components of the Work securely in place, with provisions for thermal and structural movement.

1. Unless otherwise indicated, begin metal panel installation at corners with center of rib lined up with line of framing.
2. Shim or otherwise plumb substrates receiving metal wall panels.
3. When two rows of metal panels are required, lap panels 4 inches minimum.
4. When building height requires two rows of metal panels at gable ends, align lap of gable panels over metal wall panels at eave height.
5. Rigidly fasten base end of metal wall panels and allow eave end free movement for thermal expansion and contraction. Predrill panels.
6. Flash and seal metal wall panels with weather closures at eaves and rakes, and at perimeter of all openings. Fasten with self-tapping screws.
7. Install screw fasteners in predrilled holes.
8. Install flashing and trim as metal wall panel work proceeds.
9. Apply elastomeric sealant continuously between metal base channel (sill angle) and concrete, and elsewhere as indicated on Drawings; if not indicated, as necessary for waterproofing.
10. Align bottom of metal wall panels and fasten with blind rivets, bolts, or self-drilling or self-tapping screws.
11. Provide weatherproof escutcheons for pipe and conduit penetrating exterior walls.

B. Installation Tolerances: Shim and align metal wall panels within installed tolerance of 1/4 inch in 20 feet, noncumulative; level, plumb, and on location lines; and within 1/8-inch offset of adjoining faces and of alignment of matching profiles.

3.8 METAL SOFFIT PANEL INSTALLATION

A. Provide metal soffit panels the full width of soffits. Install panels perpendicular to support framing.

B. Flash and seal metal soffit panels with weather closures where panels meet walls and at perimeter of all openings.

3.9 THERMAL INSULATION INSTALLATION

A. General: Install insulation concurrently with metal panel installation, in thickness indicated to cover entire surface, according to manufacturer's written instructions.

1. Set vapor-retarder-faced units with vapor retarder toward warm side of construction unless otherwise indicated. Do not obstruct ventilation spaces except for firestopping.
2. Tape joints and ruptures in vapor retarder, and seal each continuous area of insulation to the surrounding construction to ensure airtight installation.
3. Install factory-laminated, vapor-retarder-faced blankets straight and true in one-piece lengths, with both sets of facing tabs sealed, to provide a complete vapor retarder.
4. Install blankets straight and true in one-piece lengths. Install vapor retarder over insulation, with both sets of facing tabs sealed, to provide a complete vapor retarder.

B. Blanket Roof Insulation: Comply with the following installation method:

1. Two-Layers-between-Purlin-with-Spacer-Block Installation: Extend insulation and vapor retarder between purlins. Carry vapor-retarder-facing tabs up and over purlin, overlapping adjoining facing of next insulation course and maintaining continuity of retarder. Install layer of filler insulation over first layer to fill space between purlins formed by thermal spacer blocks. Hold in place with bands and crossbands below insulation.
   a. Thermal Spacer Blocks: Where metal roof panels attach directly to purlins, install thermal spacer blocks.
2. Retainer Strips: Install retainer strips at each longitudinal insulation joint, straight and taut, nesting with secondary framing to hold insulation in place.

C. Blanket Wall Insulation: Extend insulation and vapor retarder over and perpendicular to top flange of secondary framing. Hold in place by metal wall panels fastened to secondary framing.

3.10 ACCESSORY INSTALLATION

A. General: Install accessories with positive anchorage to building and weathertight mounting, and provide for thermal expansion. Coordinate installation with flashings and other components.

1. Install components required for a complete metal roof panel assembly, including trim, copings, ridge closures, seam covers, flashings, sealants, gaskets, fillers, closure strips, and similar items.
2. Install components for a complete metal wall panel assembly, including trim, copings, corners, seam covers, flashings, sealants, gaskets, fillers, closure strips, and similar items.
3. Where dissimilar metals contact each other or corrosive substrates, protect against galvanic action by painting contact surfaces with corrosion-resistant coating, by applying rubberized-asphalt underlayment to each contact surface, or by other permanent separation as recommended by manufacturer.

B. Flashing and Trim: Comply with performance requirements, manufacturer's written installation instructions, and SMACNA's "Architectural Sheet Metal Manual." Provide concealed fasteners where possible, and set units true to line and level. Install work with laps, joints, and seams that will be permanently watertight and weather resistant.

1. Install exposed flashing and trim that is without excessive oil-canning, buckling, and tool marks and that is true to line and levels indicated, with exposed edges folded back to form hems. Install sheet metal flashing and trim to fit substrates and to result in waterproof and weather-resistant performance.
2. Expansion Provisions: Provide for thermal expansion of exposed flashing and trim. Space movement joints at a maximum of 10 feet with no joints allowed within 24 inches of corner or intersection. Where lapped or bayonet-type expansion provisions cannot be used or would not be sufficiently weather resistant and waterproof, form expansion joints of intermeshing hooked flanges, not less than 1 inch deep, filled with mastic sealant (concealed within joints).

C. Gutters: Join sections with riveted-and-soldered or lapped-and-sealed joints. Attach gutters to eave with gutter hangers spaced as required for gutter size, but not more than 36 inches o.c. using manufacturer's standard fasteners. Provide end closures and seal watertight with sealant. Provide for thermal expansion.

D. Downspouts: Join sections with 1-1/2-inch telescoping joints. Provide fasteners designed to hold downspouts securely 1 inch away from walls; locate fasteners at top and bottom and at approximately 60 inches o.c. in between.

1. Provide elbows at base of downspouts to direct water away from building.
2. Tie downspouts to underground drainage system indicated.

E. Use concealed anchorages where possible. Provide brass or lead washers fitted to screws where required to protect metal surfaces and to make a weathertight connection.

F. Provide perimeter reveals and openings of uniform width for sealants and joint fillers.

G. Protect galvanized- and nonferrous-metal surfaces from corrosion or galvanic action by applying a heavy coating of corrosion-resistant paint on surfaces that will be in contact with concrete, masonry, or dissimilar metals.

H. Install concealed gaskets, flashings, joint fillers, and insulation as louver installation progresses, where weathertight louver joints are required. Comply with Section 07 9200 "Joint Sealants" for sealants applied during louver installation.

I. Pipe Flashing: Form flashing around pipe penetration and metal roof panels. Fasten and seal to panel as recommended by manufacturer.

3.11 QUALITY CONTROL

A. General: The Owner will engage an independent testing and inspecting agency to perform inspections and tests and to prepare test reports. Testing agency will conduct and interpret tests and state in each report whether tested Work complies with or deviates from requirements. Failure to detect any defective materials shall not prevent later rejection when such defect is discovered, or obligate the Architect or Owner for final acceptance.

1. See Section 014110 – Structural Special Inspections for testing and inspection to be performed.
2. Provide access for testing agency to places where structural framing work is being installed so that required inspection and testing can be accomplished.
3. The General Contractor shall provide the testing agency a complete set of approved shop drawings.
4. Reports will be delivered to the Architect, Engineer, and the General Contractor within one week of inspection.

5. Deviations from requirements of the contract documents will be reported in writing to the General Contractor within 24 hours.
6. Correct deficiencies in or remove and replace structural steel that inspections and test reports indicate do not comply with specified requirements.

3.12 CLEANING AND PROTECTION

A. Repair damaged galvanized coatings on galvanized items with galvanized repair paint according to ASTM A780/A780M and manufacturer's written instructions.

B. Touchup Painting: After erection, promptly clean, prepare, and prime or reprime field connections, rust spots, and abraded surfaces of prime-painted structural framing, bearing plates, and accessories.

1. Clean and prepare surfaces by SSPC-SP 2, "Hand Tool Cleaning," or by SSPC-SP 3, "Power Tool Cleaning."
2. Apply a compatible primer of same type as shop primer used on adjacent surfaces.

C. Touchup Painting: Cleaning and touchup painting are specified in Section 09 9113 "Exterior Painting" and Section 09 9123 "Interior Painting."

D. Metal Panels: Remove temporary protective coverings and strippable films, if any, as metal panels are installed. On completion of metal panel installation, clean finished surfaces as recommended by metal panel manufacturer. Maintain in a clean condition during construction.

1. Replace metal panels that have been damaged or have deteriorated beyond successful repair by finish touchup or similar minor repair procedures.

END OF SECTION 133419

SECTION 20 0100 - GENERAL PROVISIONS - MECHANICAL

1. GENERAL

A. The Advertisement for Bids, Instructions to Bidders, Bidding Requirements, General, Special and Supplementary Conditions, and all other contract documents shall apply to the Contractor's work as well as to each of his Sub-Contractor's work. All manufacturers, suppliers, fabricators, contractors, etc. submitting proposals to any part if for work, services, materials or equipment to be used on or applied to this project are hereby directed to familiarize themselves with all documents pertinent to this Contract. In case of conflict between these General Provisions and the General and/or Special Conditions, the affected Contractor shall contact the Engineer for clarification and final determination.

B. Each Proposer shall also be governed by any unit prices and Addenda insofar as they may affect his part of the work or services.

C. The work included in this division consists of the furnishing of all labor, equipment, transportation, excavation, backfill, supplies, material, appurtenances and services necessary for the satisfactory installation of the complete and operating Mechanical System(s) indicated or specified in the Contract Documents.

D. Any materials, labor, equipment or services not mentioned specifically herein which may be necessary to complete or perfect any part of the Mechanical Systems in a substantial manner, in compliance with the requirements stated, implied or intended in the drawings and/or specifications, shall be included as part of this Contract.

E. It is not the intent of this section of the specifications to make any Contractor, other than the General Contractor (or Construction Manager, if applicable), responsible to the Owner, Architect and Engineer. All transactions such as submittal of shop drawings, claims for extra costs, requests for equipment or materials substitution, shall be routed through the General Contractor to the Architect (if applicable), then to the Engineer. Also, this section of the specifications shall not be construed as an attempt to arbitrarily assign responsibility of work, material, equipment or services to a particular trade or Contractor. Unless stated otherwise, the subdivision and assignment of work under the various sections shall be optional.

F. It is the intent of this Contract to deliver to the Owners a "like new" project once work is complete. Although plans and specifications are complete to the extent possible, it shall be the responsibility of the Contractors involved to remove and/or relocate or re-attach any existing or new systems which interfere with new equipment or materials required for the complete installation without additional cost to the Owner.

G. In general, and to the extent possible, all work shall be accomplished without interruption of existing facilities operations. The Contractor shall advise the Owners at least two weeks prior to the interruption of any services or utilities. The Owners shall be advised of the exact time that interruption will occur and the length of time the interruption will last. Failure to comply with this requirement may result in complete work stoppage by the Contractors involved until a complete schedule of interruptions can be developed.

H. Definitions and Abbreviations

(1) Contractor - Any Contractor whether proposing or working independently or under the supervision of a General Contractor and/or Construction Manager and who installs any type of mechanical work (Controls, Plumbing, HVAC, Sprinkler, Gas Systems, etc.) or, the General Contractor.

(2) Engineer - The Consulting Mechanical-Electrical Engineers either consulting to the Owners, Architect, other Engineers, etc. In this case: CMTA, Inc., Consulting Engineers.

(3) Architect - The Architect of Record for the project.

(4) Furnish - Deliver to the site in good condition and turn over to the Contractor who is to install.

(5) Provide - Furnish and install complete, tested and ready for operation.

(6) Install - Receive and place in satisfactory operation.

(7) Indicated - Listed in the Specifications, shown on the Drawings or Addenda thereto.

(8) Typical - Where indicated repeat this work, method or means each time the same or similar condition occurs whether indicated or not.

(9) Contract Documents - All documents pertinent to the quality and quantity of work to be performed on this project. Includes, but not limited to: Plans, Specifications, Instructions to Bidders, General and Special Conditions, Addenda, Alternates, Lists of Materials, Lists of Sub-Contractors, Unit Prices, Shop Drawings, Field Orders, Change Orders, Cost Breakdowns, Schedules of Value, Periodical Payment Requests, Construction Contract with Owners, etc.

(10) Proposer - Any person, agency or entity submitting a proposal to any person, agency or entity for any part of the work required under this contract.

(11) OSHA - Office of Safety and Health Administration.

(12)KBC - Kentucky Building Code.

(13)The Project - All of the work required under this Contract.

(14)NEC - National Electrical Code.

(15)NFPA - National Fire Protection Association.

(16)ASME - American Society of Mechanical Engineers.

(17)AGA - American Gas Association.

(18)SMACNA - Sheet Metal and Air Conditioning Contractors National Association.

(19)ANSI - American National Standards Institute.

(20)ASHRAE - American Society of Heating, Refrigeration and Air Conditioning Engineers.

(21)NEMA - National Electrical Manufacturers Association.

(22)UL - Underwriters Laboratories.

(23)ADA - Americans with Disabilities Act.

(24)IMC - International Mechanical Code.

(25)IECC - International Energy Conservation Code.

(26)IFGC - International Fuel Gas Code.

I. Required Notices:

(1) Ten days prior to the submission of a proposal, each proposer shall give written notice to the Engineer of any materials or apparatus believed inadequate or unsuitable; in violation of laws, ordinances, rules or regulations of authorities having jurisdiction; and any necessary items of work omitted. In the absence of such written notice, Proposers signify that they have included the cost of all required items in the proposal and that the Proposer will be responsible for the safe and satisfactory operation of the entire system.

J. All work shall conform to University of Kentucky official design standards. A complete copy of the design standards is located at the following location:
https://www.uky.edu/cpmd/design-standards/divisions-20---29---facility-services-subgroup
All contractors shall familiarize themselves with this standard and bid the project accordingly. If a conflict arises between the specifications and the facility standard, the proposer shall notify the engineer of the conflict prior to his bid.

2. INTENT

A. It is the intention of the Contract Documents to call for finished work, tested and ready for operation.
B. Details not usually shown or specified, but necessary for the proper installation and operation of systems, equipment, materials, etc., shall be included in the work, the same as if herein specified or indicated.

3. DRAWINGS AND SPECIFICATIONS

A. The drawings are diagrammatic only and indicate the general arrangement of the systems and are to be followed. If deviations from the layouts are necessitated by field conditions, detailed layouts of the proposed departures shall be submitted to the Engineer for approval before proceeding with the work. The drawings are not intended to show every item which may be necessary to complete the systems. All proposers shall anticipate that additional items may be required and submit their bid accordingly.

B. The drawings and specifications are intended to supplement each other. No Proposer shall take advantage of conflict between them, or between parts of either. Should this condition exist, the Proposer shall request a clarification not less than twelve days prior to the submission of the proposal so that the condition may be clarified by Addendum. In the event that such a condition arises after work is started, the interpretation of the Engineer shall be final.

C. The drawings and specifications shall be considered to be cooperative and anything appearing in the specifications which may not be indicated on the drawings or conversely, shall be considered as part of the Contract and must be executed the same as though indicated by both.

D. Contractor shall make all his own measurements in the field and shall be responsible for correct fitting. He shall coordinate this work with all other branches of work in such a manner as to cause a minimum of conflict or delay.

E. The Engineer shall reserve the right to make adjustments in location of piping, ductwork, equipment, etc. where such adjustments are in the interest of improving the project.

F. Should conflict or overlap (duplication) of work between the various trades become evident, this shall be called to the attention of the Engineer. In such event neither trade shall assume that he is to be relieved of the work which is specified under his branch until instructions in writing are received from the Engineer.

G. Unless dimensioned, the mechanical drawings only indicate approximate locations of equipment, piping, ductwork, etc. Dimensions given in figures on the drawings shall take precedence over scaled dimensions and all dimensions, whether given in figures or scaled, shall be verified in the field to ensure no conflict with other work.

H. Each Proposer shall review all drawings including Architectural, Mechanical, Electrical, Fire Protection, Landscaping, Structural, Surveys, etc., to ensure that the work he intends to provide does not encroach a conflict with or affect the work of others in any way. Where such effect does occur, it shall be the Proposer's responsibility to satisfactorily eliminate any such encroachment conflict or effect prior to the submission of his proposal. Each Proposer shall in particular ensure that there is adequate space to install his equipment and materials. Failure to do so shall result in the correction of such encroachment conflict or effect of any work awarded the proposer and shall be accomplished fully without expense to others and that they are reasonably accessible for maintenance. Check closely all mechanical and electrical closets, chases, ceiling voids, wall voids, crawl spaces, etc., to ensure adequate spaces.

I. Where on the drawings a portion of the work is drawn out and the remainder is indicated in outline, or not indicated at all, the parts drawn out shall apply to all other like portions of the work. Where ornamentation or other detail is indicated by starting only, such detail shall be continued throughout the courses or parts in which it occurs and shall also apply to all other similar parts of the work, unless otherwise indicated.

J. Details not usually shown or specified, but necessary for the proper installation and operation of systems, equipment, materials, etc., shall be included in the work, the same as if herein specified or indicated.

K. Where on the Drawings or Addenda the word typical is used, it shall mean that the work method or means indicated as typical shall be repeated in and each time it occurs whether indicated or not.

L. Special Note: Always check ceiling heights indicated on Architectural Drawings and Schedules and ensure that they may be maintained after all mechanical and electrical equipment is installed. Do not install equipment in the affected area until the conflict is resolved.

4. EXAMINATION OF SITE AND CONDITIONS

A. Each Proposer shall inform himself of all of the conditions under which the work is to be performed, the site of the work, the structure of the ground, above and below grade, the obstacles that may be encountered, the availability and location of necessary facilities and all relevant matters concerning the work. Each Proposer shall also fully acquaint himself with all existing conditions as to ingress and egress, distance of haul from supply points, routes for transportation of materials, facilities and services, availability of utilities, etc. His proposal shall cover all expenses or disbursements in connection with such matters and conditions. No allowance will be made for lack of knowledge concerning such conditions after bids are accepted.

5. EQUIPMENT AND MATERIALS SUBSTITUTIONS OR DEVIATIONS

A. When any Contractor requests approval of materials and/or equipment of different physical size, capacity, function, color, access, it shall be understood that such substitution, if approved, will be made without additional cost to anyone other than the Contractor requesting the change regardless of changes in connections, space requirements, electrical characteristics, electrical services, etc., from that indicated. In all cases where substitutions affect other trades, the Contractor requesting such substitutions shall advise all such Contractors of the change and shall remunerate them for all necessary changes in their work. Any drawings, Specifications, Diagrams, etc., required to describe and coordinate such substitutions or deviations shall be professionally prepared at the responsible Contractor's expense. Review of Shop Drawings by the Engineers does not in any way absolve the Contractor of this responsibility.

B. Notwithstanding any reference in the specifications to any article, device, product, material, fixture, form, or type of construction by name, make or catalog number, such reference shall be interpreted as establishing a standard of quality and shall not be construed as limiting competition; any devices, products, materials, fixtures, forms, or types of construction which, in the judgment of the Engineer, are equivalent to those specified are acceptable, provided the provisions of Paragraph (A) immediately preceding are met. Requested substitutions shall be submitted to the Engineer a minimum of twelve days prior to bids.

C. Wherever any equipment and material is specified exclusively only such items shall be used unless substitution is accepted in writing by the Engineers.

D. Each Proposer shall furnish along with his proposal a list of specified equipment and materials which he is to provide. Where several makes are mentioned in the specifications and the Contractor fails to state which he proposes to furnish, the Engineer shall choose any of the makes mentioned without change in price. Inclusion in this list shall not ensure that the Engineers will approve shop drawings unless the equipment, materials, etc., submitted in shop drawings is satisfactorily comparable to the items specified and/or indicated.

6. SUPERVISION OF WORK

A. The Contractor shall personally supervise the work for which he is responsible or have a competent superintendent, approved by the Engineers, on the work at all times during progress with full authority to act for him.

7. CODES, RULES, PERMITS, FEES, INSPECTIONS, REGULATIONS, ETC.

A. The Contractor shall give all necessary notices, obtain and pay for all permits, government sales taxes, fees, inspections and other costs, including all utility connections, meters, meter settings, taps, tap fees, extensions, water and/or sewer system development charge, etc. in connection with his work. He shall also file all necessary plans, prepare all documents and obtain all necessary approvals of all governmental departments and/or the appropriate municipality or utility company having jurisdiction, whether indicated or specified or not. He shall hire an independent Registered Engineer to witness installations and provide necessary certifications where required by utility companies, municipal agencies or others that have review authority. He shall also obtain all required certificates of inspection for his work and deliver same to the Engineers before request for acceptance and final payment for the work. Ignorance of Codes, Rules, Regulations, Laws, etc. shall not render the Contractor irresponsible for compliance. The Contractor shall also be versed in all Codes, Rules and Regulations pertinent to his part of the work prior to submission of a proposal.

B. The Contractor shall include in his work, without extra cost, any labor, materials, services, apparatus and drawings in order to comply with all applicable laws, ordinances, rules and regulations, whether or not indicated or specified.

C. All materials furnished and all work installed shall comply with the National Fire Codes of the National Fire Protection Association, with the requirements of local utility companies, or municipalities and with the requirements of all governmental agencies having jurisdiction.

D. All materials and equipment so indicated and all equipment and materials for the electrical portion of the mechanical systems shall bear the approval label of, or shall be listed by the Underwriters' Laboratories (UL), Incorporated. Each packaged assembly shall be approved as a package. Approval of components of a package shall not be acceptable. Where required by the Code and/or the Authority Having Jurisdiction, provide the services of a field labeling agency to provide a UL label for the entire system in the field under evaluation.

E. All plumbing work is to be constructed and installed in accordance with plans and specifications which have been approved in their entirety and/or reflect any changes requested by the State Department of Health. Plumbing work shall not commence until such plans are in the hands of the Contractor.

F. All Heating, Ventilation and Air Conditioning work shall be accomplished in accordance with the Kentucky Building Code (KBC) and amendments thereto, the latest standards recognized by the American Society of Heating, Refrigerating and Air Conditioning and the National Fire Protection Association. Contractor shall secure a permit from the Division of HVAC. Final inspection certificate shall be provided by Contractor and a copy included in Operation and Maintenance Manuals.

G. All pressure vessel installations shall comply with the State, and/or Federal Code applicable. A Certificate of Final Boiler Inspection shall be required.

H. The Contractor shall furnish three (3) copies of all Final Inspection Certificates obtained to the Engineer when work is complete. Final payment for work will be contingent upon compliance with this requirement.

I. Where minimum code requirements are exceeded in the Design, the Design shall govern.

J. The Contractor shall ensure that his work is accomplished in accord with the OSHA Standards and that he conducts his work and the work of his personnel in accord with same.

K. All work relating to the handicapped shall be in accord with regulations currently enforced by the Department of Housing, Buildings and Construction, Commonwealth of Kentucky and the American Disabilities Act.

L. All work in conjunction with a natural gas installation shall, in addition to all other Codes, Rules, Regulations, Standards, etc., comply with the requirements of the local gas supplier and/or standards and recommendations of the American Gas Association.

M. All work in relation to domestic water systems shall, in addition to all other Codes, Rules, Regulations and Standards, be in compliance with the requirements of the local water utility company and the adopted edition of the 10 States Standards.

N. All work in relation to the installation of sanitary or storm sewers shall, in addition to all other Codes, Rules, Regulations and Standards, be in compliance with the local agency governing such installations and the adopted edition of the 10 States Standards.

O. All work relating to the handicapped shall be in accord with regulations currently enforced by the Department of Housing, Buildings, and Construction, Commonwealth of Kentucky and the American Disabilities Act.

8. EQUIPMENT AND PIPING SUPPORT

A. Each piece of equipment, apparatus, piping, or conduit suspended from the structure or mounted above the floor level shall be provided with suitable structural support, pipe stand, platform or carrier in accordance with the best recognized practice. Such supporting or mounting means shall be provided by the Contractor for all equipment and piping. Exercise extreme care that structural members of building are not overloaded by such equipment. Provide any required additional bracing, cross members, angles, support, etc., as indicated or required by the Structural Engineer. This, in some instances, will require the Contractor to add an angle to a joist to transfer the load to a panel point. If in doubt, contact the Structural Engineer.

9. DUCT AND PIPE MOUNTING HEIGHTS

A. All exposed or concealed ductwork, piping, etc., shall be held as high as possible unless otherwise noted and coordinated with all other trades. Exposed piping and ductwork shall, insofar as possible, run perpendicular or parallel to the building structure.

10. COST BREAKDOWNS (SCHEDULE OF VALUES)

A. Within thirty days after acceptance of the Contract, the Contractor shall furnish to the Engineer, one copy of a detailed cost breakdown on each respective area of work. These cost breakdowns shall be made in a format approved by the Engineer. Payments will not be made until satisfactory cost breakdowns are submitted.

11. CORRECTION PERIOD

A. All equipment, apparatus, materials, and workmanship shall be the best of its respective kind. The Contractor shall replace all parts at his own expense, which are proven defective as described in the General Conditions. The effective date of completion of the work shall be the date of the Architect's or Engineer's Statement of Substantial Completion. Items of equipment which have longer guarantees, as called for in these specifications, shall have warranties and guarantees completed in order, and shall be in effect at the time of final acceptance of the work by the Engineer. The Contractor shall present the Engineer with such warranties and guarantees at the time of final acceptance of the work. The Owner reserves the right to use equipment installed by the Contractor prior to date of final acceptance. Such use of equipment shall not invalidate the guarantee except that the Owner shall be liable for any damage to equipment during this period, due to negligence of his operator or other employees. Refer to other sections for any special or extra warranty requirements.

B. It is further clarified that all required and specified warranties shall begin on the date of Substantial Completion, not at the time of equipment start-up.

C. All gas fired heat exchangers shall have 20-year warranty.

D. All compressors shall have five-year warranty.

12. COMPUTER-BASED SYSTEM SOFTWARE

A. For all equipment, controls, hardware, computer-based systems, programmable logic controllers, and other materials provided as a part of the work, software that is installed shall be certified in writing to the Engineer and Owner by the manufacturer and/or writer to be free of programming errors that might affect the functionality of the intended use.

13. CHANGES IN MECHANICAL WORK

REFER TO GENERAL AND SPECIAL CONDITIONS.

14. CLAIMS FOR EXTRA COST

REFER TO GENERAL AND SPECIAL CONDITIONS.

15. SURVEY, MEASUREMENTS AND GRADE

A. The Contractor shall lay out his work and be responsible for all necessary lines, levels, elevations and measurements. He must verify the figures shown on the drawings before laying out the work and will be held responsible for any error resulting from his failure to do so.

B. The Contractor shall base all measurements, both horizontal and vertical from established bench marks. All work shall agree with these established lines and levels. Verify all measurements at the site and check the correctness of same as related to the work.

C. Should the Contractor discover any discrepancy between actual measurements and those indicated, which prevents following good practice or the intent of the contract documents, he shall promptly notify the Engineer and shall not proceed with this work until he has received instructions from the Engineer on the disposition of the work.

16. TEMPORARY USE OF EQUIPMENT

A. The permanent heating and plumbing equipment, when installed, may be used for temporary services, with the consent of the Engineers. Should the permanent systems be used for this purpose the Contractors shall make all temporary connections required at their expense. They shall also make any replacement required due to damage wear and tear, etc., leaving the same in "as new" condition.

B. Permission to use the permanent equipment does not relieve the Contractors from the responsibility for any damages to the building construction and/or equipment which might result because of its use.

C. A pre-start-up conference shall be held with the Architect, Owner, General Contractor and the Mechanical Contractor. Equipment shall not be started until after this meeting.

D. During all phases of construction:

(1) Air Handling Units:

a. At a minimum, four complete sets of filter media are required for each unit. In each unit, install two sets of filter media during construction (more shall be required if construction activities dictate more frequent changes). In each unit, install one set of filter media at substantial completion. Leave one set of filter media in boxes in appropriate mechanical room as a spare set for the Owner. All other filters shall be used by the Contractor during construction. Dispose of all construction filter media.

b. On the outside of all return air openings install a minimum of two sets of fiberglass filter media, such as cheesecloth, to be utilized as pre-filters for the “construction” filters. Install first set upon start-up and then install second set when first set is dirty. Dispose of all dirty construction filters. Change filters as often as necessary to keep units from becoming dirty at no additional cost.

c. At substantial completion of the project the entire unit shall be cleaned to present a like “new” unit for the Owner and all filters shall be replaced with new.

(2) Heat Pump Units:

a. At a minimum, four complete sets of filter media are required for each unit. In each unit, install two sets of filter media during construction (more shall be required if construction activities dictate more frequent changes). In each unit, install one set of filter media at substantial completion. Leave one set of filter media in boxes in appropriate mechanical room as a spare set for the Owner. All other filters shall be used by the Contractor during construction. Dispose of all construction filter media.

b. On the outside of all return air openings install a minimum of two sets of fiberglass filter media, such as cheesecloth, to be utilized as pre-filters for the “construction” filters. Install first set upon start-up and then install second set when first set is dirty. Dispose of all dirty construction filters. Change filters as often as necessary to keep units from becoming dirty at no additional cost.

c. At substantial completion of the project the entire unit shall be cleaned to present a like “new” unit for the Owner and all filters shall be replaced with new.

(3) Outside Air Units:

a. These units shall not be used for temporary heating and cooling by the Contractor. They shall, however, be made operational, tested, etc. as specified during construction by the Contractor. Three complete sets of filters are required for each unit. In each unit, install one set of filters during construction. In each unit, install one set of filters at substantial completion. For each unit, leave third set of filters in boxes in appropriate mechanical room as a spare set for the Owner. Dispose of all construction filters.

b. At substantial completion of the project the entire unit shall be cleaned to present a like “new” unit for the Owner and all filters shall be replaced with new.

17. TEMPORARY SERVICES

A. The Contractor shall arrange any temporary water, electrical and other services which he may require to accomplish his work. Refer also to General and Special Conditions.

18. RECORD DRAWINGS

A. The Contractor shall ensure that any deviations from the Design are as they occur recorded in red, erasable pencil on record drawings kept at the jobsite. The Engineer shall review the record documents from time to time to ensure compliance with this specification. Compliance shall be a contingency of final payment. Pay particular attention to the location of under floor sanitary and water lines, shut-off valves, cleanouts and other appurtenances important to the maintenance and operation of Mechanical Systems. Also, pay particular attention to Deviations in the Control Systems and all exterior utilities. Keep information in a set of drawings set aside at the job site especially for this purpose. Deliver these record drawings electronically in PDF format along with the hand marked

field set to the Engineer. Electronic bid drawings will be furnished to the Contractor for his use upon request.

19. MATERIALS AND WORKMANSHIP

A. All equipment, materials and articles incorporated in the work shall be new and of comparable quality to that specified. Each Proposer shall determine that the materials and/or equipment he proposes to furnish can be brought into the building(s) and installed within the space available. In certain cases, it may be necessary to remove and replace walls, floors and/or ceilings and this work shall be the responsibility of the Contractor. All equipment shall be installed so that all parts are readily accessible for inspection, maintenance, replacement of filters, etc. Extra compensation will not be allowed for relocation of equipment for accessibility or for dismantling equipment to obtain entrance into the building(s). Ensure, through coordination, that no other Contractor seals off access to space required for equipment, materials, etc.

B. Materials and equipment, where applicable, shall bear Underwriters' Laboratories label where such a standard has been established.

C. Use extreme care in the selection of equipment and its installation to ensure that noise and vibration are kept at a minimum. The Engineer's determination shall be final and corrections to such discrepancies shall be made at the cost of the Contractor.

D. Each length of pipe, fitting, trap, fixture and device used in the plumbing or drainage systems shall be stamped or indelibly marked with the weight or quality thereof and with the manufacturer's mark or name.

E. All equipment shall bear the manufacturer's name and address. All electrically operated equipment shall bear a data plate indicating required horsepower, voltage, phase and ampacity.

20. COOPERATION AND COORDINATION WITH OTHER TRADES

A. The Contractor shall give full cooperation to all other trades and shall furnish in writing with copies to the Engineer, any information necessary to permit the work of other trades to be installed satisfactorily and with the least possible interference or delay.

B. Where any work is to be installed in close proximity to, or will interfere with work of other trades, each shall cooperate in working out space conditions to make a satisfactory adjustment. If so directed by the Engineer, the Contractor shall prepare composite working drawings and sections at a suitable scale not less than 1/4” = 1'-0”, clearly indicating how his work is to be installed in relation to the work of other trades, or so as not to cause any interference with work of other trades. He shall make the necessary changes in his work to correct the condition without extra charge.

C. The Contractor shall furnish to other trades, as required, all necessary templates, patterns, setting plans, and shop details for the proper installation of work and for the purpose of coordinating adjacent work.

21. QUALIFICATIONS OF WORKMEN

A. All mechanical work shall be accomplished by qualified workmen competent in the area of work for which they are responsible. Untrained and incompetent workmen, as evidenced by their workmanship, shall be summarily relieved of their responsibilities in areas of incompetency. The Engineer shall reserve the right to determine the quality of workmanship of any workman and unqualified or incompetent workman shall refrain from work in areas not satisfactory to him.

Requests for relief of a workman shall be made through the normal channels of Architect, Contractor, etc.

B. All plumbing work shall be accomplished by Journeymen Plumbers under the direct supervision of a Master Plumber as defined and clarified under Kentucky State Plumbing Law Regulations and Code. Proof and Certification may be requested by the Engineer.

C. All sheet metal, insulation and pipe fitting work shall be installed by workmen normally engaged or employed in these respective trades, except where only small amounts of such work are required and are within the competency of workmen directly employed by the Contractor involved.

D. All automatic control systems shall be installed by workmen normally engaged or employed in this type work, except in the case of minor control requirements (residential type furnaces, packaged HVAC equipment with integral controls, etc.) in which case, if a competent workman is the employee of this Contractor, he may be utilized subject to review of his qualifications by the Engineer and after written approval from same.

E. All special systems (Automatic Sprinkler Equipment, etc.) shall be installed only by workmen normally engaged in such services. Exception to this specification may only be made in writing by the Engineer.

F. All electrical work shall be installed only by competent workmen under direct supervision of a fully qualified Electrician.

22. CONDUCT OF WORKMEN

A. The Contractor shall be responsible for the conduct of all workmen under his supervision. Misconduct on the part of any workman to the extent of creating a safety hazard, or endangering the lives and property of others, shall result in the prompt relief of that workman. The consumption of alcoholic beverages or other intoxicants, narcotics, barbiturates, hallucinogens or debilitating drugs on the job site is strictly forbidden.

23. PROTECTION OF MATERIALS AND EQUIPMENT

A. The Contractor shall be entirely responsible for all material and equipment furnished by him in connection with his work and special care shall be taken to properly protect all parts thereof from physical, sun, and weather damage during the construction period. Such protection shall be by a means acceptable to the manufacturer and Engineer. All rough-in soil, waste, vent and storm piping, ductwork, etc., shall be properly plugged or capped during construction in a manner approved by the Engineer. Equipment damaged, stolen or vandalized while stored on site, either before or after installation, shall be repaired or replaced by the Contractor at his own expense.

24. SCAFFOLDING, RIGGING AND HOISTING

A. The Contractor shall furnish all scaffolding, rigging, hoisting and services necessary for erection and delivery onto the premises of any equipment and apparatus furnished. All such temporary appurtenances shall be set up in strict accord with OSHA Standards and Requirements. Remove same from premises when no longer required.

25. BROKEN LINES AND PROTECTION AGAINST FREEZING

A. No conduits, piping, troughs, etc. carrying water or any other fluid subject to freezing shall be installed in any part of the building where danger of freezing may exist without adequate protection

being given by the Contractor whether or not insulation is specified or indicated on the particular piping. All damages resulting from broken and/or leaking lines shall be replaced or repaired at the Contractor's own expense. If in doubt, contact the Engineer. Do not install piping across or near openings to the outside whether they are carrying static or moving fluids or not. Special Note: Insulation on piping does not necessarily ensure that freezing will not occur.

26. CLEANING

A. The Contractor shall, at all times, keep the area of his work presentable to the public and clean of rubbish and debris caused by his operations; and at the completion of the work, shall remove all rubbish, debris, all of his tools, equipment, temporary work and surplus materials from and about the premises, and shall leave the area clean and ready for use. If the Contractor does not attend to such cleaning upon request, the Engineer may cause cleaning to be done by others and charge the cost of same to the Contractor. The Contractor shall be responsible for all damage from fire which originates in, or is propagated by, accumulations of his rubbish or debris.

B. After completion of all work and before final acceptance of the work, the Contractor shall thoroughly clean all equipment and materials and shall remove all foreign matter such as grease, dirt, plaster, labels, stickers, etc., from the exterior of piping, equipment, fixtures and all other associated or adjacent fabrication.

27. CONCRETE WORK

A. The Contractor shall be finally responsible for the provisions of all concrete work required for the installation of any of his systems or equipment. He may, at his option, arrange with the others to provide the work. This option, however, will not relieve the Contractor of his responsibilities relative to dimensions, quality of workmanship, locations, etc. In the absence of other concrete specifications, all concrete related to Mechanical work shall be 3000 psi minimum compression strength at 28 days curing and shall conform to the standards of the American Concrete Institute Publication AC1-318. Heavy equipment shall not be set on pads for at least seven (7) days after pour. Insert 6-inch steel dowel rods into floors to anchor pads.

B. All mechanical equipment (tanks, heaters, chillers, boilers, pumps, air handling units, etc.) shall be set on a minimum of 4” tall concrete pads. Pads shall be taller where required for condensate traps. All concrete pads shall be complete with all pipe sleeves, anchor bolts, reinforcing steel, concrete, etc. as required. Pads larger than 18” in width shall be reinforced with ½” round bars on 6” centers both ways. Bars shall be approximately 3” above the bottom of the pad. All parts of pads and foundations shall be properly rodded or vibrated. If exposed parts of the pads and foundations are rough or show honeycomb after removing forms, all surfaces shall be rubbed to a smooth surface. Chamfer all square edges one-half inch.

C. In general, concrete pads for equipment shall extend four (4) inches beyond the equipment's base dimensions. Where necessary, extend pads 30 inches beyond base or overall dimensions to allow walking and servicing space.

D. Exterior concrete pads shall be four (4) inches minimum above grade and four (4) inches below grade on a tamped four (4) inch dense grade rock base unless otherwise indicated or specified. Surfaces of all foundations and bases shall have a smooth finish with one-half (1/2) inch chamfer on exposed edges.

E. All exterior below grade concrete structures (utility vaults, grease traps, manholes, etc.) shall be provided with exterior waterproofing. Waterproofing shall be hot-fluid applied rubberized-asphalt waterproofing membrane with elastomeric sheets at edges, corners, and terminations of membrane

for continuous watertight construction. Apply in layers and reinforce as required to provide uniform seamless membrane minimum 4mm thickness. Also, seal penetrations into and out of the structure watertight. Provide Link-Seal modular seal or equal.

28. NOISE, VIBRATION OR OSCILLATION

A. All work shall operate under all conditions of load without any sound or vibration which is objectionable in the opinion of the Engineer. In case of moving machinery, sound or vibration noticeable outside of room in which it is installed, or annoyingly noticeable inside its own room, will be considered objectionable. Sound or vibration conditions considered objectionable by the Engineer shall be corrected in an approved manner by the Contractor at his expense.

B. All equipment subject to vibration and/or oscillation shall be mounted on vibration supports whether indicated or not suitable for the purpose of minimizing noise and vibration transmission, and shall be isolated from external connections such as piping, ducts, etc. by means of flexible connectors, vibration absorbers, or other approved means. Unitary equipment, such as small room heating units, small exhaust fans, etc., shall be rigidly braced and mounted to wall, floor or ceiling as required and tightly gasketed and sealed to mounting surface to prevent air leakage and to obtain quiet operation. Flush and surface mounted equipment such as diffusers, grilles, etc., shall be gasketed and affixed tightly to their mounting surface.

C. The Contractor shall provide supports for all equipment furnished by him. Supports shall be liberally sized and adequate to carry the load of the equipment and the loads of attached equipment, piping, etc. All equipment shall be securely fastened to the structure either directly or indirectly through supporting members by means of bolts or equally effective means. If strength of supporting structural members is questionable, contact Engineers.

29. ACCESSIBILITY

A. The Contractor shall be responsible for the sufficiency of the size of shafts and chases, the adequate clearance in double partitions and hung ceilings for the proper installation of his work. He shall cooperate with all others whose work is in the same space. Such spaces and clearances shall, however, be kept to the minimum size required.

B. The Contractor shall locate and install all equipment so that it may be serviced, and maintained as recommended by the manufacturer. Allow ready access and removal of the entire unit and/or parts such as valves, filters, fan belts, motors, prime shafts, etc.

C. The Contractor shall provide access panels for each concealed valve, control damper or other device requiring service as shown on engineer's plans or as required. Locations of these panels shall be identified in sufficient time to be installed in the normal course of work.

30. RESTORATION OF NEW OR EXISTING SHRUBS, PAVING, SURFACES, ETC.

A. The Contractor shall at his expense restore to their original conditions all paving, curbing, surfaces, drainage ditches, structures, fences, shrubs, existing or new building surfaces and appurtenances, and any other items damaged or removed by his operations. Replacement and repairs shall be in accordance with good construction practice and shall match materials employed in the original construction of the item and shall be to the satisfaction of the Architect and/or Engineer.

31. MAINTENANCE OF EXISTING UTILITIES AND LINES

A. The locations of all piping, conduits, cables, utilities and manholes existing, or otherwise, that comes within the contract construction site, shall be subject to continuous uninterrupted service with no other exception than the Owner of the utilities permission to interrupt same temporarily.

B. Utilities and lines, where known, are indicated on the drawings. Locations and sizes are approximate. Prior to any excavation being performed, the Contractor shall ascertain that no utilities or lines are endangered by new excavation. Exercise extreme caution in all excavation work.

C. If utilities or lines occur in the earth within the construction site, the Contractor shall probe and locate the lines prior to machine excavation or blasting in the respective area. Electromagnetic utility locators and acoustic pipe locators shall be utilized to determine where metallic and non-metallic piping is buried prior to any excavation.

D. Cutting into existing utilities and services where required shall be done in coordination with and only at times designated by the Owner of the utility.

E. The Contractor shall repair to the satisfaction of the Engineer, any surfaces or subsurface improvements damaged during the course of the work, unless such improvement is shown to be abandoned or removed.

F. Machine excavation shall not be permitted with ten feet of electrical lines or lines carrying combustible and/or explosive materials. Hand excavate only.

G. Protect all new or existing lines from damage by traffic, etc. during construction. Repairs or replacement of such damage shall be at the sole expense of the party responsible.

32. SMOKE AND FIRE PROOFING

A. The Contractor shall fire and smoke stop all openings made in fire or smoke rated walls, chases, ceilings and floors in accord with the KBC. Patch all openings around ductwork and piping with appropriate type material to stop smoke at smoke walls and provide commensurate fire rating at fire walls, floors, ceilings, roofs, etc. Back boxes in rated walls shall be a minimum distance apart as allowed by code to maintain the rating. If closer provide rated box or fireproofing in code approved manner.

33. MOTORS

A. Motors shall be built in accordance with the latest standards of NEMA and as specified. Motors shall be tested in accordance with standards of A.S.A. C50, conforming to this and all applicable standards for insulation resistance and dielectric strength.

B. Each motor shall be provided by the equipment supplier, installer or manufacturer with conduit terminal box, and N.E.C. required disconnecting means as specified or required. Three-phase motors shall be provided with external thermal overload protection in their starter units. Single-phase motors shall be provided with thermal overload protection, integral to their windings or external, in control unit. All motors shall be installed with NEMA-rated starters as specified and shall be connected per the National Electrical Code.

C. The capacity of each motor shall be sufficient to operate associated driven devices under all conditions of operation and load and without overload, and at least of the horsepower indicated or specified. Each motor shall be selected for quiet operation, maximum efficiency and lowest starting KVA per horsepower. Motors producing excessive noise or vibration shall be replaced by the

responsible contractor. See Division 26 of Specifications for further requirements related to installation of motors.

34. CUTTING AND PATCHING

A. The Contractor shall provide his own cutting and patching necessary to install his work. Patching shall match adjacent surfaces and shall be to the satisfaction of the Architect and Engineer.

B. No structural members shall be cut without the approval of the Engineer and all such cutting shall be done in a manner directed by him.

C. When installing conduit, pipe, or any other work in insulated concrete form (ICF) walls, the responsible subcontractor for the work shall provide spray foam insulation to patch the rigid insulation to maintain full integrity of the insulating value of the wall after the mechanical and electrical work is complete. Furthermore, all new work shall NOT be installed in concrete center of wall. All mechanical and electrical installations shall be on the interior side of the concrete.

35. CURBS, PLATES, ESCUTCHEONS & AIR TIGHT PENETRATIONS

A. In all areas where ducts are exposed and ducts pass thru floors, the opening shall be surrounded by a 4-inch-high by 3-inch-wide concrete curb.

B. Escutcheon plates shall be provided for all pipes and conduit passing thru walls, floors and ceilings. Plates shall be nickel plated, of the split ring type, of size to match the pipe or conduit. Where plates are provided for pipes passing thru sleeves which extend above the floor surface, provide deep recessed plates to conceal the pipe sleeves.

C. Seal all duct, pipe, conduit, etc., penetrations through walls and floors air tight. If wall or floor assembly is rated then use similarly rated sealing method.

36. WEATHERPROOFING

A. Where any work pierces waterproofing including waterproof concrete, the method of installation shall be as approved by the Engineer before work is done. The Contractor shall furnish all necessary sleeves, caulking and flashing required to make openings permanently watertight.

37. OPERATING INSTRUCTIONS, MAINTENANCE MANUALS AND PARTS LISTS

A. Upon completion of all work tests, the Contractor shall instruct the Owner or his representative(s) fully in the operations, adjustment and maintenance of all equipment furnished. The time and a list of representatives required to be present will be as directed by the Engineer. Turn over all special wrenches, keys, etc., to the owner at this time.

B. The Contractor shall furnish three (3) complete bound sets for delivery to the Engineer of typewritten and/or blueprinted instructions for operating and maintaining all systems and equipment included in this contract prior to substantial completion. All instructions shall be submitted in draft, for approval, prior to final issue. Manufacturer's advertising literature or catalogs alone will not be acceptable for operating and maintenance instructions.

C. The Contractor, in the instructions, shall include a preventive maintenance schedule for the principal items of equipment furnished under this contract and a detailed, parts list and the name and address of the nearest source of supply.

D. Per University standards, provide as part of the IOM, an equipment schedule list on 8.5x11 inch bond paper. Tabulate equipment identification number and identify Drawing numbers where equipment is indicated (plans, details, and schedules), plus the specification section number and title where equipment is specified. Equipment schedule shall be included in operation and maintenance data.

E. Per University standards, provide as part of IOM, a detailed valve schedule list. Refer to valve identification specification for details.

F. The Contractor shall frame under Lexan in the main mechanical room all temperature control diagrams and all piping diagrams.

G. Per University standards, IOM information shall include a complete copy of the reviewed TAB report.

38. PAINTING

A. In general, all finish painting shall be accomplished under the Painting Section of the specifications by the Contractor; however, unless otherwise specified under other sections of these specifications, the following items shall be painted:

(1) All exposed piping, valve bodies and fittings (bare and insulated), including hangers, platforms, etc.

(2) All mechanical equipment not factory finished. Aluminum and stainless-steel equipment, motors, identification plates, tags, etc. shall not be painted. All rust and foreign matter shall be thoroughly removed from surfaces prior to painting. All baked enamel factory finish of equipment which may have been scratched or chipped shall be touched up with the proper paint as recommended and supplied by the manufacturer.

(3) All ductwork exposed in finished areas (bare and insulated), all grilles, diffusers, etc. not factory finished. Paint the inside surfaces of all interior duct surfaces visible from any register, grille or diffuser opening on all jobs; surfaces shall receive one (1) prime coat of Rustoleum 1225 red "galvinoleum" or other approved equivalent primer and rust inhibitor and one (1) coat of Rustoleum 1579 jet black "Speedy Dry" enamel or approved equivalent applied in accordance with the manufacturer's recommendations.

(4) All insulated piping, ductwork and equipment shall be properly prepared for painting by the Contractor where mechanical items are to be painted. In the case of externally insulated duct and pipe, the Contractor shall provide 6 oz. canvas jacket with fire retardant lagging. The jacket shall be allowed to dry properly before applying paint to avoid shrinking after painting and exposing unpainted surfaces. The Contractor, at his option, may provide double wall ductwork in lieu of externally insulated ductwork with canvas jacket and lagging.

39. ELECTRICAL CONNECTIONS

A. The Contractor shall furnish and install all (1) temperature control wiring; (2) equipment control wiring and (3) interlock wiring. The Contractor shall furnish and install all power wiring complete from power source to motor or equipment junction box, including power wiring thru starters, and shall furnish and install all required starters not factory mounted on equipment.

B. The Contractor shall, regardless of voltage, furnish and install all temperature control wiring and all associated interlock wiring, all equipment control wiring and conduit for the equipment that the Contractor furnishes. He may, at his option, employ at his own expense, the Electrical Contractor to accomplish this work.

C. After all circuits are energized and completed, the Contractor shall be responsible for all power wiring, and all control wiring shall be the responsibility of the Contractor. Motors and equipment shall be provided for current characteristics as shown on the drawings.

D. The Contractor shall furnish motor starters of the type and size required by the manufacturer for all equipment provided by him, where such starters are necessary. Starters shall have overloads for each phase.

40. FINAL CONNECTIONS TO EQUIPMENT

A. The Contractor shall finally connect to mechanical services, any terminal equipment, appliances, etc., provided under this and other divisions of the work. Such connections shall be made in strict accord with current codes, safety regulations and the equipment manufacturer's recommendations. If in doubt, contact the Engineers prior to installation.

41. REQUIRED CLEARANCE FOR ELECTRICAL EQUIPMENT

A. The NEC has specific required clearances above, in front, and around electrical gear, panels etc. The Contractor shall not install any piping, ductwork, etc., in the required clearance. If any appurtenance is located in the NEC required clearance, it shall be relocated at no additional cost.

42. INDEMNIFICATION

A. The Contractor shall hold harmless and indemnify the Engineer, employees, officers, agents and consultants from all claims, loss, damage, actions, causes of actions, expense and/or liability resulting from, brought for, or on account of any personal injury or property damage received or sustained by any person, persons, (including third parties), or any property growing out of, occurring, or attributable to any work performed under or related to this contract, resulting in whole or in part from the negligence of the Contractor, any subcontractor, any employee, agent or representative.

43. HAZARDOUS MATERIALS

A. The Contractor is hereby advised that it is possible that asbestos and/or other hazardous materials are or were present in this building(s). Any worker, occupant, visitor, inspector, etc., who encounters any material of whose content they are not certain shall promptly report the existence and location of that material to the Contractor and/or Owner. The Contractor shall, as a part of his work, ensure that his workers are aware of this potential and what they are to do in the event of suspicion. He shall also keep uninformed persons from the premises during construction. Furthermore, the Contractor shall ensure that no one comes near to or in contact with any such material or fumes therefrom until its content can be ascertained to be non-hazardous.

B. CMTA, Inc., Consulting Engineers, have no expertise in the determination of the presence of hazardous materials. Therefore, no attempt has been made by them to identify the existence or location of any such material. Furthermore, CMTA nor any affiliate thereof will neither offer nor make any recommendations relative to the removal, handling or disposal of such material.

C. If the work interfaces, connects or relates in any way with or to existing components which contain or bear any hazardous material, asbestos being one, then, it shall be the Contractor's sole responsibility to contact the Owner and so advise him immediately.

D. The Contractor by execution of the contract for any work and/or by the accomplishment of any work thereby agrees to bring no claim relative to hazardous materials for negligence, breach of contract,

indemnity, or any other such item against CMTA, its principals, employees, agents or consultants. Also, the Contractor further agrees to defend, indemnify and hold CMTA, its principals, employees, agents and consultants, harmless from any such related claims which may be brought by any subcontractors, suppliers or any other third parties.

44. ABOVE-CEILING AND FINAL PUNCH LISTS

A. The Contractor shall review each area and prepare a punch list for each of the subcontractors, as applicable, for at least two stages of the project:

(1) For review of above-ceiling work that will be concealed by tile or other materials well before substantial completion.
(2) For review of all other work as the project nears substantial completion.

B. When all work from the Contractor's punch list is complete at each of these stages and prior to completing ceiling installations (or at the final punch list stage), the Contractor shall request that the Engineer develop a punch list. This request is to be made in writing seven days prior to the proposed date. After all corrections have been made from the Engineer's punch list, the Contractor shall review and initial off on each item. This signed-off punch list shall be submitted to the Engineer. The Engineer shall return to the site once to review each punch list and all work prior to the ceilings being installed and at the final punch list review.

C. If additional visits are required by the Engineer to review work not completed by this review, the Engineer shall be reimbursed directly by the Contractor at a rate of $140.00 per hour for extra trips required to complete either of the above-ceiling or final punch lists.

Phone: 859 253-0892 Fax: 859 231-8357

The following is CMTA's guide for Division 20-25 required information relative to the Schedule of Values. Please utilize all items that pertain to this project and add any specialized system as required. A thorough and detailed schedule of values will allow for fair and equitable Pay Application approval and minimize any discrepancies as to the status of the job.

DIVISION 20-25 – MECHANICAL **Field Representative:** _____
Project Engineer: _____

Description of Work	Scheduled Value	Labor	Material
Shop Drawings			
Mobilization/Permits			
Demolition			
Plumbing Underslab			
Sanitary Above Slab Rough-in			
Plumbing Fixtures			
Plumbing Inspections			
Sprinkler Plan Submittals			
Fire Protection Exterior			
Fire Protection Vault			
Fire Protection Interior			
Storm Piping Exterior			
Storm Piping Interior			
Plumbing Shop Drawings			
Mechanical Shop Drawings			
Domestic Water Piping			

Domestic Water Insulation			
Hydronic Piping			
Gas Piping Exterior			
Gas Piping Interior			
Steam Piping			
HVAC Sheet Metal			
Heat Pumps			
Air Rotation Units			
Pumps & Assoc. Equipment			
Grilles & Diffusers			
Insulation			
Controls			
Air Balance			
Water Balance			
Chemical Treatment			
Factory Start-Up Reports			
Owner Training			
Record Drawings			
O & M Manuals			
Punchlist/Closeout			
Controls Check-out			

END OF SECTION 20 0100

SECTION 20 0200- SCOPE OF THE MECHANICAL WORK

1. GENERAL

A. The Mechanical work for this Contract shall include all labor, materials, equipment, fixtures, excavation, backfill and related items required to completely install, test, place in service and deliver to the Owner the complete mechanical systems in accordance with the accompanying plans and all provisions of these specifications. This work shall primarily include, but is not necessarily limited to the following:

(1) Complete exterior domestic water service finally connected to the local domestic water system.

(2) Complete exterior sanitary sewer system connected to the local system.

(3) Complete exterior storm drainage system.

(4) Complete exterior fire protection system.

(5) Interior domestic hot, cold and recirculating hot water system.

(6) Interior soil, waste and vent systems.

(7) Roof drainage system.

(8) All plumbing equipment, fixtures and fittings.

(9) 100% automatic sprinkler system.

(10) All mechanical exhaust systems.

(11) All insulation associated with mechanical systems.

(12) Condensate drainage systems.

(13) Complete heating, ventilation and air conditioning systems.

(14) Final connection of all mechanical equipment furnished by others (e.g., kitchen equipment).

(15) Complete balancing of air and water systems.

(16) Complete natural gas piping systems.

(17) All applicable services and work specified in Section 200100; General Provisions - Mechanical.

(18) All specified or required control work.

(19) Provide all required motor starters, etc. not provided under the electrical sections.

(20) One year guarantee of all mechanical equipment, materials and workmanship.

(21) Thorough instruction of the owner’s maintenance personnel in the operation and maintenance of all mechanical equipment.

(22) Thorough coordination of the installation of all piping, equipment and any other material with other trades to ensure that no conflict in installation.

(23) Approved supervision of the mechanical work.

(24) Excavation, backfilling, cutting, patching, sleeving, concrete work, etc., required to construct the mechanical systems.

(25) Prior to submitting a bid, the Contractor shall contact all serving utility companies to determine exactly what each utility company will provide and exactly what is required of the Contractor and shall include such requirements in his base bid.

(26) Procurement of all required permits and inspections, including fees for all permits and inspection services and submission of final certificates of inspection to the Engineers (Plumbing, Boiler, HVAC, etc.).

(27) All necessary coordination with gas, water, and sewer utility companies, etc., to ensure that work, connections, etc., that they are to provide is accomplished.

(28) Factory start-up of all major equipment (including terminal HVAC equipment) and submission of associated factory start-up reports to the Engineer.

END OF SECTION 20 0200

SECTION 20 0300 - SHOP DRAWINGS, DESCRIPTIVE LITERATURE, MAINTENANCE MANUALS, PARTS LISTS, SPECIAL KEYS & TOOLS

1. GENERAL

A. The Contractor's attention is directed also to the General and Special Conditions and Section 200100 - General Provisions - Mechanical as well as to all other Contract Documents as they may apply to his work.

B. The Contractor shall prepare and submit to the Engineer, through the General Contractor and the Architect (where applicable) within thirty (30) days after the date of the Contract, all shop drawings, certified equipment drawings, installation, operating and maintenance instructions, samples, wiring diagrams, etc. on all items of equipment specified hereinafter through Ecomm. In addition to the electronic submittal, hard copies of the Fire Protection drawings shall be submitted.

C. Submittal data shall include specification data including metal gauges, finishes, accessories, etc. Also, the submittal data shall include certified performance data, wiring diagrams, dimensional data, and a spare parts list. Submittal data shall be reviewed by the Engineer before any equipment or materials is ordered or any work is begun in the area requiring the equipment.

D. All submittal data shall have the stamp of approval of the Contractor submitting the data as well as the General Contractor and the Architect (if applicable) to show that the drawings have been reviewed by the Contractor. Any drawings submitted without these stamps of approval may not be considered and will be returned for proper resubmission.

E. It shall be noted that review of shop drawings by the Engineer applies only to conformance with the design concept of the project and general compliance with the information given in the contract documents. In all cases, the Contractor alone shall be responsible for furnishing the proper quantity of equipment and/or materials required, for seeing that all equipment fits the available space in a satisfactory manner and that piping, electrical and all other connections are suitably located.

F. The Engineers review of shop drawings, schedules or other required submittal data shall not relieve the Contractor from responsibility for: adaptability of the item to the project; compliance with applicable codes, rules, regulations and information that pertains to fabrication and installation; dimensions and quantities; electrical characteristics; and coordination of the work with all other trades involved in this project. Any items that differ from the Drawings or Specifications shall be flagged by the Contractor so the Engineer will be sure to see the item. Do not rely on the Engineer to “catch” items that do not comply with the Drawings or Specifications. The Contractor is responsible for meeting the Drawings and Specification requirements, regardless of whether or not something does not get caught by the Contractor or Engineer during shop drawing reviews.

G. Equipment shall not be ordered and no final rough-in connections, etc., shall be accomplished until reviewed equipment shop drawings are in the hands of the Contractor. It shall be the Contractor's responsibility to obtain reviewed shop drawings and to make all connections, etc. in the neatest and most workmanlike manner possible. The Contractor shall coordinate with all the other trades having any connections, roughing-in, etc. to the equipment.

H. If the Contractor fails to comply with the requirements set forth above, the Engineer shall have the option of selecting any or all items listed in the Specifications or on the drawings; and the Contractor shall be required to furnish all materials in accordance with this list.

I. Colors for equipment in other than mechanical spaces shall be selected from the Manufacturer's standard and factory optional colors. Color samples shall be furnished with the shop drawing submission for such equipment.

J. Shop Drawing Submittals

(1) All submittals for HVAC equipment shall include all information specified. This shall include air and water pressure drops, RPM, noise data, face velocities, horsepower, voltage motor type, steel or aluminum construction, and all accessories clearly marked.

(2) All items listed in the schedules shall be submitted for review in a tabular form similar to the equipment schedule.

(3) All items submitted shall be designated with the same identifying tag as specified on each sheet.

(4) Any submittals received in an unorganized manner without options listed and with incomplete data will be returned for resubmittal.

2. SHOP DRAWINGS

Shop Drawings, descriptive literature, technical data and required schedules shall be submitted on the following:

Duct Insulation (Internal and External)
Condensing units
Pipe Insulation
Water Heaters
Hydronic Specialties
(1) Pumps and Circulators (HVAC)
Heat Pumps
Air handling units
Controls

<u>SPECIAL NOTES</u>:

1) Upon substantial completion of the project, the Contractor shall deliver to the Engineers (in addition to the required Shop Drawings) three (3) complete copies of operation and maintenance instructions and parts lists for each item marked (1) above. These documents shall include at least:

a. Detailed operating instructions
b. Detailed maintenance instructions including preventive maintenance schedules.
c. Addresses and phone numbers indicating where parts may be purchased.

2) Shop drawings for the Control Systems shall include detailed, scaled plans and schematic diagrams indicating the function and operation of the system.

3) Shop drawings for the Building Fire Protection System shall be prepared and stamped by a Certified Contractor and shall meet the criteria of the Department of Housing, Buildings and Construction and submitted to the Engineer. After the Engineer's review, they shall be submitted by the Contractor to the proper state authorities along with the required State review fee.

3. SPECIAL WRENCHES, TOOLS, ETC.

(1) The Contractor shall furnish, along with equipment provided, any special wrenches or tools necessary to dismantle or service equipment or appliances installed under the Contract. Wrenches shall include necessary keys, handles and operators for valves, cocks, hydrants, etc. A reasonable number of each shall be furnished.

4. BALANCE REPORTS

A. Upon substantial completion of the project, the Contractor shall submit to the Engineers four (4) bound copies of the Certified Air and Hydronic Balance Report.

END OF SECTION 20 0300

SECTION 20 0500 - COORDINATION AMONG TRADES, SYSTEMS INTERFACING AND CONNECTION OF EQUIPMENT FURNISHED BY OTHERS

1. COORDINATION

A. The Contractor is expressly directed to read the General Conditions and all detailed sections of these specifications for all other trades and to study all drawings applicable to his work, including Architectural and Structural drawings, to the end that complete coordination between trades will be affected. Special attention shall be given to the points where ducts or piping must cross other ducts or piping, where lighting fixtures must be recessed in ceilings, and where ducts, piping and conduit must fur into walls, soffits, columns, etc. It shall be the responsibility of the Contractor to leave the necessary room for other trades. No extra compensation will be allowed to cover the cost of removing piping, conduit, ducts, etc., or equipment found encroaching on space required by others.

B. The Contractor shall be responsible for coordination with the Electrical trade to ensure that he has made provision for connections, operational switches, disconnect switches, fused disconnects, etc. for electrically operated equipment provided under this division of the specifications, or called for on the plans.

C. If any discrepancies occur between accompanying drawings and these specifications and drawings and specifications covering other Contracts, each trade shall report such discrepancies to the Architect far enough in advance so that a workable solution can be presented. No extra payment will be allowed for relocation of piping, ductwork, conduit, and equipment not installed in accordance with the above instructions, and which interfered with work and equipment of other trades.

D. In all areas where air diffusers and lighting fixtures are to be installed, the Contractor shall coordinate their respective construction and installations so as to provide combined symmetrical arrangements.

2. INTERFACING

The Contractor shall ensure that coordination is affected relative to interfacing of systems. Some interface points are (but not necessarily all):

A. Connection of Domestic Water System to water service mains.

B. Connection of Natural Gas System to natural gas service.

C. Connection of Fire Protection System to domestic water service.

D. Connection of Sanitary sewer house line to municipal service.

E. Connection of Storm Drainage System to municipal system.

F. Connection of all controls to equipment.

G. Electrical power connections to electrically operated (or controlled) equipment.

3. CONNECTION OF EQUIPMENT FURNISHED BY OTHERS

A. The Contractor shall make all connections to equipment furnished by others, or relocated from the existing structure, whenever such equipment is shown on any part of the drawings or mentioned in any part of the Specifications, unless otherwise specifically specified hereinafter.

B. Supervision to assure proper functioning and operation shall be provided by the Contractor.

C. Items indicated on the drawings as rough-in only (RIO) will be connected by others. The Contractor shall be responsible for rough-in provisions only.

D. For items furnished by others, relocated, or RIO, the Contractor shall obtain from the supplier or shall field determine as appropriate, the exact rough-in locations and connection sizes for the referenced equipment.

E. The Contractor shall be responsible for coordinating to determine any and all final connections that he is to make to equipment furnished by others.

4. COORDINATION EFFORT AND RECORD DRAWINGS

(1) Pre-Coordination Meetings with all necessary trades shall occur. During these meetings, the Contractors shall discuss locations/elevations where piping, conduits, cable trays, etc will be installed with respect to the sheet metal fabrication drawings and other trades. The sheetmetal ductwork and gravity piping systems shall be given the first priority. Within 30 days of the meeting, each Trade shall provide the Mechanical Contractor electronic drawings of all of their systems (with elevation noted), coordinated with the ductwork and other trades for them to incorporate into the Coordination Drawings. Coordination Meetings shall then occur so that all conflicts can be resolved between Trades. All conflicts shall be resolved between all Trades at these Coordination Meetings and the Mechanical Contractor shall then amend the Drawings to include the Final Coordinated Work.

(2) RECORD DRAWINGS - Each Contractor shall ensure that any deviations from the Coordination Drawings are recorded as they occur, in red erasable pencil on Coordination Drawings kept at the jobsite. Upon completion of a particular phase, the Mechanical Contractor shall incorporate all field deviations into the Coordination Drawings to be utilized as Record Drawings. The Engineer shall review the Record Documents from time to time to ensure compliance with this specification. Compliance shall be a contingency of final payment. Pay particular attention to the location of under floor sanitary and water lines, shut-off valves, cleanouts and other appurtenances important to the maintenance and operation of Mechanical Systems. Also, pay particular attention to Deviations in the Control Systems and all exterior utilities. Keep information in a set of drawings set aside at the job site especially for this purpose. The Record Drawings shall be distributed electronically (on CD) to the Construction Manager, Owner, Architect and Engineer for their Records.

END OF SECTION 20 0500

SECTION 20 1100 - SLEEVING, CUTTING, PATCHING AND REPAIRING

1. GENERAL

A. The Contractor's attention is directed to the General and Special Conditions, General Conditions-Mechanical and to all other Contract Documents as they apply to this branch of the work. Attention is also directed to all other sections of the Contract Documents which affect the work of this section and which are hereby made a part of the work specified in this section.

B. The Contractor shall be responsible for all openings, sleeves, trenches, etc., that he may require in floors, roofs, ceilings, walls, etc., and shall coordinate all such work with the General Contractor and all other trades. Coordinate with the General Contractor, any openings which he is to provide before submitting a bid proposal in order to avoid conflict and disagreement during construction. Improperly located openings shall be reworked at the expense of the Contractor.

C. The Contractor shall plan his work ahead and shall place sleeves, frames or forms through all walls, floors and ceilings during the initial construction, where it is necessary for piping, ductwork, conduit, etc., to go through; however, when this is not done, the Contractor shall do all cutting and patching required for the installation of his work, or he shall pay other trades for doing this work when so directed by the Engineer. Any damage caused to the buildings by the workmen of the responsible Contractor must be corrected or rectified by him at is own expense.

D. The Contractor shall notify other trades in due time where he will require openings or chases in new concrete or masonry. He shall set all concrete inserts and sleeves for his work. Failing to do this, he shall cut openings for his work and patch same as required at his own expense.

E. The Contractor shall be responsible for properly shoring, bracing, supporting, etc., any existing and/or new construction to guard against cracking, settling, collapsing, displacing or weakening while openings are being made. Any damage occurring to the existing and/or new structures, due to failure to exercise proper precautions or due to action of the elements shall be promptly and properly made good to the satisfaction of the Engineer.

F. All work improperly done or not done at all as required by the Mechanical Trades in this section, will be performed by the Contractor at the direction of the trade whose work is affected.

2. SLEEVES, PLATES AND ESCUTCHEONS

A. The Contractor shall provide and locate all sleeves and inserts required for his work before the floors and surface being penetrated are built, otherwise the Contractor shall core drill for pipes where sleeves and inserts were not installed, or where incorrectly located. Core drilling is the only acceptable alternative to sleeves. Do not chisel openings. Where sleeves are placed in exterior walls or in slabs on grade, the space between the pipe or conduit and the sleeves shall be made completely and permanently water tight.

B. Pipe that penetrates fire and/or smoke rated assemblies shall have sleeves installed as required by the manufacturer of the rating seal used.

C. At all other locations either pipe sleeves or core drilled openings are acceptable.

D. Where thermal expansion does not occur, the wall may be sealed tight to the pipe or insulation.

E. Insulation, that requires a vapor barrier (i.e., cold water or refrigerant piping, etc.), must be continuous through the sleeve/cored hole. For other piping, insulation may stop on either side of the sleeve.

F. Sleeves shall be constructed of 24-gauge galvanized sheet steel with lock seam joints or Schedule 40 pipe. Sleeves in floors shall extend 1" above finished floor level.

G. Fasten sleeves securely in floors, walls, so that they will not become displaced when concrete is poured or when other construction is built around them. Take precautions to prevent concrete, plaster or other materials being forced into the space between pipe and sleeve during construction.

H. In all areas where ducts are exposed and ducts pass thru floors, the opening shall be surrounded by a 4-inch-high by 3-inch-wide concrete curb.

I. Escutcheon plates shall be provided for all pipes and conduit passing thru walls, floors and ceilings. Plates shall be nickel plated, of the split ring type, of size to match the pipe or conduit. Where plates are provided for pipes passing thru sleeves which extend above the floor surface, provide deep recessed plates to conceal the pipe sleeves.

3. CUTTING

A. All rectangular or special shaped openings in plaster, stucco or similar materials, including gypsum board, shall be framed by means of plaster frames, casing beads, wood or metal angle members as required. The intent of this requirement is to provide smooth even termination of wall, floor and ceiling finishes as well as to provide a fastening means for grilles, diffusers, lighting fixtures, etc.

B. Mechanical, plumbing, and fire protection contractors shall coordinate all openings in new and existing masonry walls with the General Contractor; and, unless otherwise indicated on the Architectural drawings, provide lintels for all openings required for the work (Louvers, wall boxes, exhaust fans, etc.). Lintels shall be sized as follows:

(1) New Openings under 48" in width: Provide one 3-1/2"x3-1/2"x3/8" steel angle for each 4" of masonry width. Lintel shall have 8" bearing on either side.

(2) New Openings 48" to 96" in width: Provide one 3-1/2"x6"x3/8" steel angle for each 4" of masonry width. Lintel shall have 8" bearing on either side.

(3) New Openings over 96" in width: Consult the Project Structural Engineer.

C. No cutting is to be done at points or in a manner that will weaken the structure and unnecessary cutting must be avoided. If in doubt, contact the Engineer.

D. Pipe openings in slabs and walls shall be cut with core drill. Hammer devices will not be permitted. Edges of trenches and large openings shall be scribe cut with a masonry saw.

E. Openings in metal building walls shall be made in strict accord with building suppliers recommendations.

4. PATCHING AND REPAIRING

A. Patching and repairing made necessary by work performed under this division shall be included as a part of the work and shall be done by skilled mechanics of the trade or trades for work cut or

damaged, in strict accordance with the provisions herein before specified for work of like type to match adjacent surfaces and in a manner acceptable to the Engineer.

B. Where portions of existing lawns, shrubs, paving, etc. are disturbed for installation of work of this Division, such items shall be repaired and/or replaced to the satisfaction of the Engineer.

C. Where the installation of conduit, ducts, piping, etc. requires the penetration of fire or smoke rated walls, ceilings or floors, the space around such conduit, duct, pipe, etc., shall be tightly filled with an approved non-combustible fire insulating material satisfactory to maintain the rating integrity of the wall, floor or ceilings affected.

D. Where ducts penetrate fire rated assemblies, fire dampers shall be provided with an appropriate access door.

E. Piping passing through floors, ceilings and walls in finished areas, unless otherwise specified, shall be fitted with chrome plated brass escutcheons of sufficient outside diameter to amply cover the sleeved openings and an inside diameter to closely fit the pipe around which it is installed.

F. Stainless steel collars shall be provided around all ducts, large pipes, etc., at all wall penetrations; both sides.

G. Where ducts, pipes, and conduits pass through interior or exterior walls, the wall openings shall be sealed air tight. This shall include sealing on both sides of the wall to ensure air does not enter or exit the wall cavity. This is especially critical on exterior walls where the wall cavity may be vented to the exterior.

H. When installing conduit, pipe, or any other work in insulated concrete form (ICF) walls, the responsible subcontractor for the work shall provide spray foam insulation to patch the rigid insulation to maintain full integrity of the insulating value of the wall after the mechanical and electrical work is complete. Furthermore, all new work shall NOT be installed in concrete center of wall. All mechanical and electrical installations shall be on the interior side of the concrete.

END OF SECTION 20 1100

SECTION 20 1200 - EXCAVATION, TRENCHING, BACKFILLING AND GRADING

1. GENERAL

   A. The Contractor's attention is directed to the General and Special Conditions, General Conditions-Mechanical and to all other Contract Documents as they apply to this branch of the work. Attention is also directed to all other sections of the Contract Documents which affect the work of this section and which are hereby made a part of the work specified in this section.

   B. The Contractor shall include all excavating, filling, grading, and related items required to complete his work as shown on the drawings and specified herein or as required to complete, connect and place all mechanical systems in satisfactory operation.

   C. Unless otherwise shown or required, provide separate trenches for sewers, water lines and other underground raceways, with a minimum of 10 feet measured from outside diameter between pipes. In locations, such as close to buildings where separate trenches for sewers and water lines are impractical, lay the water pipe on a solid shelf at least 2'-0" above the top of the sewer and 2-0" to the side. Electric and fuel lines shall always be placed in a separate trench. All exterior lines shall have a minimum earth cover of thirty (30) inches to top of pipe, unless otherwise indicated.

   D. Water lines crossing under sewer lines, or crossing less than 2 feet above sewer lines, must be encased for a distance not less than 5 feet on either side of the point of crossover.

2. SUBSURFACE DATA

   A. Materials to be excavated shall be unclassified, and shall include earth, rock, or any other material encountered in the excavating to the depth and extent indicated on the drawings and specified herein. No adjustment in the Contract sum will be made on account of the presence or absence of rock, shale, or other materials encountered in the excavating. This paragraph is written to include the removal of all rock with no extras, whether rock is indicated or not.

3. BENCH MARKS AND MONUMENTS

   A. Maintain carefully all bench marks, monuments and other reference points. If disturbed or destroyed, replace as directed.

4. EXCAVATION

   A. Excavate trenches of sufficient width for proper installation of the work. When the depth of backfill over sewer pipe exceeds 10 feet, keep the trench at the level of the top of the pipe as narrow as practicable. Trench excavation for piping eight inches and smaller shall not exceed thirty-inch width for exterior lines and twenty-four-inch width for interior lines.

   B. Sheet and brace trenches as necessary to protect workmen and adjacent structures. Comply with local regulations or, in the absence thereof, with the "Manual of Accident Prevention in Construction" of the Associated General Contractors of America, Inc., and current OSHA Standards. Do not remove sheeting until trench is backfilled sufficiently to protect pipe and prevent injurious caving. Where removal of sheeting and/or bracing is hazardous, leave in place. Cut off such sheeting not to be removed at least 3 feet below finished grade.

   C. Rules and regulations governing the respective utilities shall be observed in executing all work under this heading. Active utilities discovered in the course of excavation shall be protected or

relocated in accordance with written instructions from the Engineer. Inactive and abandoned utilities encountered in trenching operations shall be removed and abandoned with ends plugged or capped in accord with current codes and safe practice. If in doubt, contact Engineers. Machine excavation shall not be allowed within ten (10) feet of existing electric lines or lines carrying combustible materials. Use only hand tools.

D. The removal of rock shall be accomplished by use of hand or power tools only. Blasting shall not be permitted unless authorized in writing by the Engineer. Any damage to existing structures, exterior services, or rock intended for bearing, shall be corrected at the Contractor's expense.

E. Perform final grading of trench bottoms by hand tools; carry machine excavation only to such depth that soil bearing for pipes and raceways will not be disturbed. Grade the bottom of trenches evenly to ensure uniform bearing for all piping and raceways. Cut bell holes as necessary for joints and jointmaking. Except as hereinafter specified, bottom of trenches for bell and spigot pipe, flanged pipe, etc. shall be shaped to the lower quadrant of pipe with additional excavation for bell or flange. Piping installed where it rests on bell, or flange and/or is supported with blocks or wedges will not be accepted.

F. Keep trenches free from water while construction therein is in progress. Under no circumstances lay pipe or appurtenances in water. Pump or bail water from bell holes to permit proper jointing of pipe. Any water pumping from this Contractor's trenches which is required during construction, shall be included in this Contract.

G. In no case shall excavation work be accomplished that will damage in any way the new structure, existing structures, equipment, utility lines, large trees to remain, etc. The Contractors shall take the necessary steps to prevent flow of eroded earth by water or landslide onto the property of others, or against the structures. The repair of all such damage or any other damage incurred in the course of excavation shall be borne by the responsible Contractor.

H. Use surveyor's level to establish elevations and grades.

I. The Contractor shall accept the site as he finds it and remove all trash, rubbish and material from the site prior to starting excavation of his work.

J. The Contractor shall provide and maintain barricades and temporary bridges around excavations as required for safety. Temporary bridges shall be provided where excavations cross paved areas and walks. The Contractor shall maintain these bridges in a safe and passable condition for all traffic until removal. Refer to OSHA Standards for such installations and comply with same in all details.

K. Pay particular attention to existing utilities and lines to avoid damage. The locations of existing lines which are indicated on the plans were taken unconfirmed from drawings prepared for previous construction and locations are approximate only. Also, certain water, gas, electric, storm and sanitary sewer lines and other underground appurtenances, active or abandoned, may not appear on the drawings. It shall be each Mechanical Contractor's responsibility to ascertain the location of all lines and excavate with caution in their area.

5. BACKFILL AND SURFACE REPAIR

A. Backfilling for mechanical work shall include all trenches, manhole pits, storage tank pits, and/or any other earth and/or rock openings which are excavated under this Contract. Backfilling shall be carefully performed and the surface restored to its original level to receive new finish. Wherever trenches and earth openings have not been properly filled and/or settlement occurs,

they shall be re-excavated, re-filled and properly compacted, smoothed off and finally made to conform to the level of the original ground surface.

B. Unless otherwise indicated or specified, all piping shall be bedded on four (4) inches minimum of compacted naturally or artificially graded mixture of crushed gravel, crushed stone, or crushed sand with 100 percent passing a 1-inch sieve and not more than 8 percent passing a No. 200 sieve on undisturbed soil excavated as described hereinbefore. Install tracer wire above pipe. Cover the pipe with twelve (12) inches of compacted backfill to prevent settlement above and around the new pipe. The backfill shall be naturally or artificially graded mixture of crushed gravel, crushed stone, or crushed sand with 100 percent passing a 1-inch sieve and not more than 8 percent passing a No. 200 sieve. Prior to placing this second level of backfill, apply all required coatings and coverings to pipe, apply required tests and check the grading of the pipe to ensure that it is correct and that the pipe is free of swags, bows or bends. Also check lines for leaks at this point and repair as required. Once all of the preceding is accomplished, continue backfill with clean, debris and rock free earth tamped at six (6) inch intervals. Finish the backfill as specified following. Note: Water settling of backfill will be permitted only as an aid to mechanical compacting.

(1) When installing any type of pipe below building footing, parallel or perpendicular to the footing, the area underneath the footing and in the zone of influence shall be backfilled with cementitious flowable fill. The zone of influence is the area within a 45-degree angle projecting down from the bottom edge of footers on all sides of the footing. Piping within flowable fill shall be isolated from the fill by a layer of heavy duty felt paper. Piping installed in trenches backfilled with flowable fill shall be anchored to the soil below prior to backfilling.

C. Backfill beneath areas to be seeded or sodded within six (6) inches of finished grade. The remaining six (6) inches shall be backfilled with clean top soil.

D. Backfill beneath paved areas, walks, etc. shall be brought to proper grade to receive the sub-base and paving. No paving shall be placed on uncompacted fill or unstable soil.

E. Backfill for natural gas lines shall be in strict accordance with the utility company or local municipalities requirements. If in doubt, contact the utility company or local municipality and/or the Engineer.

F. Wherever, in the opinion of the Engineer, the soil at or below the requisite pipe grade is unsuitable for supporting piping, special support shall be provided as directed by the Engineer.

G. Unsuitable material and surplus excavated material not required for backfill shall be removed from the site. The location of dump and length of haul shall be the affected Contractor's responsibility.

H. Provide and place any additional fill material from off the site as may be required for backfill. Fill obtained from off site shall be of kind and quality as specified for backfill and the source approved by the Engineer and shall be brought to the site by the Contractor requiring the fill.

I. In the absence (if not specified or indicated elsewhere in the drawings or specifications to be done by others) of such work by others, the Contractor shall lay new sod over his excavation work. Level, compress and water in accord with sound sodding practice.

J. When running any type of piping below a footer or in the zone of influence the piping shall be backfilled with cementitious flowable fill. The zone of influence is the area under the footer within a 45-degree angle projecting down from the bottom edge of the footer on all sides of the footer. Additionally, grease traps, manholes, vaults, and other underground structures shall be held away from building walls far enough to be outside of the zone of influence.

K. Warning Tape and Tracer Wire

Per University standards, provide a bright-colored plastic tape in all trenches 6" above the buried utility that is appropriately marked to identify the utility about to be encountered. Tape to be continuous printed, intended for direct burial service, not less than 6” wide by 4 mils thick. Tape to be multi-ply consisting of solid aluminum foil core between 2-layres of plastic tape. For non-metallic pipe a #12 copper wire shall also be laid in the trench to aid in future location of the piping. A foil faced warning tape may be used in lieu of the plastic tape and wire. Per University

L. Utility Service Markers: Install per University standards to identify under-grade utilities.

(1) Markers shall consist of bronze plates, ground and polished, and marked to identify the service. Markers shall also be stamped with arrows indicating the direction the service extends. **DESIGNER NOTE: INCLUDE STANDARD UK MARKER DETAIL ON DRAWINGS.**

(2) Markers locating services at the building shall be installed in masonry or concrete walls 2 ft above grade. Markers locating services elsewhere on the site shall be installed inj concrete walks or curbs, or in 6”x6” steel reinforced concrete posts. Refer to detail.

M. All manholes, vaults, and similar underground structures shall have the top elevation set flush with finished grade unless specifically noted otherwise.

6. MINIMUM DEPTHS OF BURY (TO TOP OF PIPE)

In the absence of other indication, the following shall be the minimum depth of bury of exterior utility lines. (Check drawings for variations).

A. Domestic Water Lines .....36 inches.

B. Fire Protection Lines .....42 inches.

C. Storm Lines .....20 inches.

D. Sanitary Lines (Exterior).....36 inches.

E. Natural Gas Lines .....36 inches.

F. Other lines carrying combustible and/or hazardous materials.....36 inches.

END OF SECTION 20 1200

SECTION 20 1300 - PIPE, PIPE FITTINGS AND PIPE SUPPORT

1. GENERAL

A. The Contractor's attention is directed to the General and Special Conditions, General Conditions-Mechanical and to all other Contract Documents as they apply to this branch of the work. Attention is also directed to all other sections of the Contract Documents which affect the work of this section and which are hereby made a part of the work specified in this section.

B. When a pipe size is not indicated, the Contractor shall request the pipe size from the Engineers. All piping shall be installed straight and true, parallel or perpendicular to the building construction. Piping shall be installed so as to allow for expansion without damage to the building finishes, structure, pipe, equipment, etc., use offsets, U-bends or expansion joints as required. Where a section of piping is not indicated but is obviously required for completion of the system, the Contractor shall provide same at no additional cost to the project. No mitered joints or field fabricated pipe bends shall be accepted. Pipe shall clear all windows, doors, louvers and other building openings.

C. All pipe shall be supported in a neat and workmanlike manner and wherever possible, parallel runs of horizontal piping shall be grouped together on trapeze type hangers. Vertical risers shall be supported at each floor line with approved steel pipe riser clamps. The use of wire or perforated metal to support pipes will not be permitted. Hanging pipes from other pipes shall not be permitted. Spacing of pipe supports shall not exceed eight feet for pipes up to 1-1/4 inches and ten feet on all other piping. Small vertical pipes (1 inch and less) shall be bracketed to walls, structural members, etc. at four (4) foot intervals so as to prevent vibration or damage by occupants. Insulated piping shall be supported on a rigid insulation block at each hanger so as to prevent crushing of insulation by hangers. Hangers shall pass completely around the insulation jacket and a steel protective saddle shall be applied to prevent compression of the insulation. (Refer to Specifications Section entitled INSULATION-MECHANICAL). **DELETE BELOW IF NOT A METAL BUILDING.** In metal buildings, support piping with standard pipe hangers with C-clamp connection to main structural members (not purlins), use angle steel cross pieces between main structural members where required to provide rigid support.

D. Where piping rests directly on a hanger, clip, bracket or other means of support, the support element shall be of the same material as the pipe, (e.g., copper to copper, ferrous to ferrous, etc.) or shall be electrically isolated one from the other so as to prevent pipe damage by electrolysis. Pay particular attention and do not allow copper pipe to rest on ferrous structural members, equipment, etc. without electrolytic isolation.

E. In general, piping shall be installed concealed except in Mechanical, Janitor Rooms, etc. unless otherwise indicated, and shall be installed underground or beneath concrete slabs only where indicated. All lines at ceilings shall be held as high as possible and shall run so as to avoid conflicts with other trades, and to facilitate the Owner's use and maintenance. Location of pipe in interior partitions shall be carefully coordinated with whoever will construct the partitions after the piping is in place. Where exposed risers occur, they shall be kept as close to walls as possible.

F. Installation of pipe shall be in such a manner as to provide complete drainage of the system toward the source. Drain valves shall be provided at all drainage points on pipes. Drain valves shall be 1/2" size gate type with 3/4" hose thread end and vacuum breaker. Label each drain valve.

G. All hot and cold-water piping shall be kept a sufficient distance apart so as to prevent heat transfer between them. Cold water piping shall also be kept apart from refrigerant hot gas lines.

H. Piping carrying water or other fluids subject to freezing shall not be installed in locations subject to freezing; if in doubt, consult Engineer.

I. Piping for all drainage systems shall be installed to permit flow, trapping, and venting in accord with current codes and sound practice.

J. All cast iron soil pipe and fittings shall be coated inside and out with coal tar varnish.

K. Non-metallic piping shall be installed in strict accordance with the manufacturer's instructions. If no such instructions are available, consult Engineers.

L. Per University standards, no plastic pipe is to be used inside any building or structure unless explicitly approved within the project specification.

M. Nipples shall be of the same material, composition and weight classification as pipe with which installed.

N. Where piping is not indicated on the plans, but is obviously or apparently required, contact the Engineers prior to submission of a bid proposal.

O. Pay particular attention to conflict of piping with other work. Do not install until conflict is resolved. If necessary, contact Engineers.

P. Piping materials in each system shall, to the extent practicable, be of the same material. Frequent changes of material (for example, from copper to steel) shall be avoided and in no case, shall be accomplished without use of insulating unions and permission of the Engineers.

Q. Apply approved pipe dope (for service intended) to <u>all</u> male threaded joints. Pay particular attention to dope for fuel gas lines. The dope shall be listed for such use.

R. High points of closed loop hot water heating systems shall have manual or automatic air vents as indicated or required unless automatic air vents are specifically indicated. Pipe to suitable drainage point.

S. All piping shall be capped or plugged during erection as required to keep clean and debris and moisture free.

T. The entire domestic hot, cold and recirculating hot water piping system shall be sterilized in strict accord with requirements of the Department of Health Codes, Rules and Regulations for the State which the work is being accomplished in.

U. Provide expansion joints where shown on the plans and where required by good practice. Expansion joints shall be guided and anchored in accordance with the recommendations of the Expansion Joint Manufacturer's Association.

V. Where plastic pipe penetrates a fire rated assembly, it shall be replaced with a metal threaded adapter and a metal pipe per code.

W. Foam Core PVC is not permitted

Where piping penetrates interior or exterior walls, the wall shall be sealed air tight. Refer to the sleeving, cutting, patching and repairing section of the specifications for additional requirements.

X. Provide thrust blocks on all storm, sanitary, water, steam, hot, chilled, condenser, etc., and any other piping subject to hammering. Thrust blocks shall be provided at all turns.

Y. All piping to hydronic coils shall be full size all the way to the coil connection on the unit. If control valve is smaller than pipe size indicated, transition immediately before and after control valve. Also, if coil connection at unit is a different size than the branch pipe size indicated, provide transition at coil connection to unit. On 3-way valve applications, the coil bypass pipe shall be full size.

Z. Provide check valves on individual hot and cold-water supplies to each mixing valve (including each sensor style faucet, safety shower, mop sink, etc.) and each showerhead with a diverter valve (including all ADA showers). This requirement shall not be satisfied by mixing valves or fixtures with internal check valves. Independent external check valves are required.

AA. Ends of piping shall be reamed and , where applicable, all threads shall be sharp and true.

2. UNIONS AND FLANGES AND WELDED TEES

A. Screwed unions, soldered unions or bolted flanges shall be provided as required to permit removal of equipment, valves and piping accessories from the piping system. Keep adequate clearances for coil removal, rodding, tube replacement, motor lubrication, filter replacement, etc. Flanged joints shall be assembled with appropriate flanges, gaskets and bolting. Gaskets for steam piping systems shall be flexitalic spiral wound type. The clearance between flange faces shall be such that the connections can be gasketed and bolted tight without imposing undue strain on the piping system.

B. Dielectric insulating unions or couplings shall be used wherever the adjoining materials being connected are of dissimilar metals such as connections between copper and steel pipe.

C. Tee connections for welded pipe shall be made up with welding fittings. Where the size of the side outlet is such that a different connection technique than on the run is required, a weldolet, sockolet, or threadolet type fitting may be used for the branch in place of reducing tees only where the branch is 2/3 the run size or smaller.

3. SPECIFICATIONS STANDARDS

All piping and material shall be new, full weight, made in the United States and shall conform to the following minimum applicable standards:

A. Steel pipe; ASTM A-120, A-53 Grade A, A-53 Grade B.

B. Copper tube; Type K, L, M; ASTM B88-62; Type DWV ASTM B306-62.

C. Cast iron soil pipe; ASA A-40.l and CS 188-59.

D. Cast iron drainage fittings; ASA B16.12.

E. Cast iron screwed fittings; ASA B16.4.

F. Welding fittings; ASA B16.9.

G. Cast brass and wrought copper fittings; ASA B16.18.

H. Cast brass drainage fittings; ASA B16.23.

I. Reinforced concrete pipe; ASTM-C-76-64T.

J. Solder; Handy and Harmon, United Wire and Supply; Air Reduction Co. or equivalent.

K. CPVC Plastic pipe; ASTM D2846.

L. PVC plastic pipe; ASTM D1785.

M. ABS plastic pipe; ASTM D1788-73.

N. Cross-linked polyethylene (PEX) pipe; ASTM F876 and ASTM F877.

O. Cross-linked polyethylene (PEX) fittings; ASTM F1960

4. PITCH OF PIPING

All piping systems shall be installed so as to drain to a low point. Certain minimum pitches shall be required for this drainage. For proper flow and/or for proper operation, the following pitches shall be required:

A. Interior Soil, Waste and Vent Piping:

1/4 inch per foot in direction of flow where possible but in no case less than 1/8" per foot.

B. Exterior Sanitary Lines:

Not less than one (1) percent fall in direction of flow and no greater than indicated.

C. Roof Leaders:

1/8 inch per foot where possible. Where not possible, run dead level.

D. Condensate Drain Lines from Cooling Equipment:

Not less than 1/4 inch per foot in direction of flow.

E. High and Low-Pressure Steam Mains:

One inch in 20 feet in direction of flow.

F. Steam Condensate Return Lines:

One inch in 20 feet in direction of flow.

G. Exterior Storm Lines:

Not less than 1 percent grade in direction of flow.

H. All Other Lines:

Provide ample pitch to a low point to allow 100 percent drainage of the system.

5. APPLICATIONS

A. General Notes

DESIGNER EDIT THE BELOW UNLESS YOU HAVE RECEIVED WRITTEN APPROVAL FOR USE OF PLASTIC PIPE FROM UK PROJECT MANAGER.

(1) Where plastic piping penetrates a fire rated assembly, it shall be replaced with a threaded metal adapter and metal pipe or whatever means necessary to maintain the separation rating in accordance with local plumbing and fire codes.

(2) Plastic piping or any materials with a flame and smoke spread rating not approved for plenum use shall not be permitted in supply, return, relief or exhaust plenums.

(3) PVC, CPVC, or plastic piping shall not be used under paving, roads or areas where vehicular traffic is expected.

(4) PVC or plastic piping whether specifically listed or not may not be used in high rise buildings or anywhere else prohibited by code.

B. Sanitary Sewer – Exterior

Note: All underground building drain pipe and fittings to be Cast Iron Soil Pipe ASTM A74, service weight, hub and spigot soil pipe and fittings.

Hub and Spigot Cast Iron Soil Pipe and Fittings: Hub and Spigot Cast Iron pipe and fittings shall be manufactured from gray cast iron and shall conform to ASTM A 74. All pipe and fittings shall be marked with the collective trademark of the Cast Iron Soil Pipe Institute ® and listed by NSF® International. Pipe and fittings to be:

□ Service (SV) or

□ Extra Heavy (XH)

Joints can be made using a compression gasket manufactured from an elastomer meeting the requirements of ASTM C 564. All pipe and fittings to be produced by a single manufacturer and are to be installed in accordance with manufacturer's recommendations and applicable code requirements. The system shall be hydrostatically tested after installation to 10 ft. of head (4.3 psi maximum).

(1) SDR 35 PVC pipe extruded from Type 1, Grade 1 polyvinyl chloride material. PVC pipe shall have a bell type fitting on one end. All joints shall be solvent cement type, made in accordance with the Kentucky Plumbing Code.

C. Natural Gas Piping - Exterior

Exterior natural gas piping shall be thermoplastic gas pressure pipe with fittings complying with ASTM D 2513. All gas piping shall be installed per NFPA 54.

Columbia Gas of Kentucky requires, in compliance with Sections 192.283 and 192.285 of Title 49 of the Code of Federal Regulations, that Contractors installing plastic pipe be qualified in the procedures for joining plastic pipe. Contractors not previously qualified by Columbia should contact the local Columbia Gas office for information on the necessary procedures for qualifying under this requirement.

D. Domestic Water Piping - Exterior

(1) Type "K" hard copper with wrought copper fittings and brazed joints.

(2) Schedule 150 ductile iron piping with cement mortar lining and rubber gasketed joints.

(3) Schedule 40 PVC pipe, NSF approved for underground domestic cold-water pipe, with solvent weld joints. All piping and joints shall meet the Kentucky Plumbing Code.

(4) Class 200 PVC. Piping shall meet AWWA C900 requirements, be UL listed, Factory Mutual approved and NSF approved. Joints shall have spigot pipe ends with a flexible elastomeric ring seated in a groove to provide water tight seal. Minimum burst pressure to be 900 psi when tested in accordance with ASTM D1599.

E. Fire Protection - Exterior and Interior

Refer to the Fire Protection System section of these specifications.

F. Soil, Waste and Vent Piping (Below Slab)

Hub and Spigot Cast Iron Soil Pipe and Fittings: Hub and Spigot Cast Iron pipe and fittings shall be manufactured from gray cast iron and shall conform to ASTM A 74. All pipe and fittings shall be marked with the collective trademark of the Cast Iron Soil Pipe Institute® and listed by NSF® International.
Pipe and fittings to be:

□ Service (SV) or

□ Extra Heavy (XH)

Joints can be made using a compression gasket manufactured from an elastomer meeting the requirements of ASTM C 564. All pipe and fittings to be produced by a single manufacturer and are to be installed in accordance with manufacturer's recommendations and applicable code requirements. The system shall be hydrostatically tested after installation to 10 ft. of head (4.3 psi maximum).

IS THIS ACCEPTABLE FOR THIS PROJECT? UK PPD MUST APPROVE PRIOR TO BID TO BE USED.

(1) Schedule 40 PVC pipe with drainage pattern fittings and solvent cement joints made in accordance with the Kentucky Plumbing Code. **Foam core piping is not permitted.**

G. Soil, Waste and Vent Piping (Above Slab)

(1) Hubless Cast Iron Soil Pipe and Fittings (*NOTE: Can only be used above slab) Hubless Cast Iron pipe and fittings shall be manufactured from gray cast iron and shall conform to ASTM A 888 and CISPI Standard 301. All pipe and fittings shall be marked with the collective trademark of the Cast Iron Soil Pipe Institute ® and listed by NSF® International. Hubless Couplings shall conform to CISPI Standard 310 and be certified by NSF® International. All couplings shall be Heavy Duty couplings shall conform to ASTM C 1540 and shall be used on all projects. Gaskets shall conform to ASTM C 564. All pipe and fittings to be produced by a single manufacturer and are to be installed in accordance with manufacturer's recommendations and applicable code requirements. Couplings shall be installed in accordance with the manufacturer's band tightening sequence and torque recommendations. Tighten bands with a properly calibrated torque limiting device. The system shall be hydrostatically tested after installation to 10 ft. of head (4.3 psi maximum). Pipe size 1-1/2" through 4" shall have 4 clamps per coupling. Pipe size 5" through 10" shall have 6 clamps per coupling.

IS THIS ACCEPTABLE FOR THIS PROJECT? UK PPD MUST APPROVE PRIOR TO BID TO BE USED.

(2) Schedule 40 PVC pipe with drainage pattern fittings and solvent cement joints made in accordance with the Kentucky Plumbing code.

H. Natural Gas Piping – Interior

(1) Schedule 40 black steel pipe with malleable iron threaded fittings for pipe sizes 2" and smaller.

(2) Schedule 40 black steel pipe with wrought steel buttwelded fittings for pipe sizes 2-1/2" and larger.

(3) Where gas pressure is 5 psi or greater, piping shall be schedule 40 black steel pipe with wrought steel buttwelded fittings.

(4) Gas piping on the roof shall have expansion loops on all piping runs 75 feet or greater.

<u>NOTES</u>:

(1) All gas piping shall be installed per NFPA 54.

(2) Unions or valves shall not be installed in an air plenum.

(3) Piping below slab must be sleeved and vented.

(4) Piping installed in concealed locations shall not have mechanical joints.

I. Domestic Cold, Hot and Recirculating Hot Water Piping (Above Slab)

(1) Type "L" hard copper tubing with wrought copper fittings with lead free solder equivalent in performance to 95/5. (Maximum lead content of solder and flux is 2%).

J. Trap Prime Piping

(1) Above slab: It shall match domestic water piping requirements.

(2) Underslab: It shall match domestic water piping requirements with a protective wrap or cross-linked polyethylene (PEX) piping.

K. Domestic Cold, Hot and Recirculating Hot Water Piping (Below Slab)

Type "K" hard or soft copper tubing with wrought copper fittings and brazed joints. There shall be no joints beneath slabs.

L. Air Vent Discharge Lines

Type "L" soft copper; wrought copper fittings, 95/5 solder.

M. Refrigerant Piping

Interior Piping for Variable Refrigerant Flow Systems 1/8” to 1-3/8” shall be ACR soft copper tube with long radius bends of soft copper tube. Provide ACR hard copper tube in all sizes for systems other than Variable Refrigerant Flow. Interior lines larger than 1-3/8” shall be ACR hard copper tube. All exterior lines shall be ACR hard copper tube. Fitting shall be wrought or forged copper with silver solder joints and minimum 15% silver content.

(1) General Installation Notes:

a. Contact Engineer 24 hours prior to installation of refrigerant lines or evacuation of refrigerant system.

b. Refrigerant lines installation must meet HVAC equipment manufacturer's recommendations.

c. While installing or soldering refrigerant lines, system must continuously be purged with nitrogen.

d. After system is installed, the refrigerant system must be evacuated to 25 microns for eight hours.

N. Condensate Drain Lines

(1) Type "DWV” copper, wrought copper, lead free solder.

(2) Schedule 40 PVC with solvent welded fittings.

O. Water Heater Relief Line

Type "M" copper tubing with sweat fittings and 95/5 solder.

END OF SECTION 20 1300

SECTION 20 1310 - WELDING

1. GENERAL

   A. All welding accomplished by the Contractor shall comply with provision of the latest revision of applicable codes, whether ASME Boiler and Pressure Vessel Code for pressure piping or such State and Local requirements as may supersede these codes.

   B. Welds shall be of sound metal thoroughly fused to the base metal at all points, free from cracks and reasonably free from oxidation blow holes and non-metallic inclusions. No fins or weld metal shall project within the pipe and should they occur they shall be removed. All pipe beveling shall be done by machine. The surface of all parts to be welded shall be thoroughly cleaned free from paints, oil, rust or scale at the time of welding, except that a light coat of oil may be used to preserve the beveled surfaces from rust.

   C. Pipe and fittings shall be carefully aligned with adjacent parts and this alignment must be preserved in a rigid manner during the process of welding.

   D. Each Contractor shall be responsible for quality of welding done by his organization and shall repair or replace any work not done in accordance with specifications. If required by the Architect/Engineer, the Contractor shall cut out at least three (3) welds during the job for X-raying and testing. These welds shall be selected at random by the Resident Inspector and shall be tested as a part of the Contractor's Contract. Certifications of these tests and X-rays shall be submitted, in triplicate to the Engineer. In case a faulty weld is discovered, the Contractor shall be required to furnish additional tests.

2. WELDING QUALIFICATIONS

   A. It is required that all welding of piping covered by this specification, regardless of conditions of service, be installed as follows:

      (1) Pipe welding shall comply with the provisions of the latest revision of the applicable codes, whether ASME Boiler and Pressure Vessel Code, ASA Code for Pressure Piping, or such state or local requirements as may supercede codes mentioned above.

      (2) Before any pipe welding is performed, submit to the Owner or his authorized representative, a copy of the welding procedure specifications, together with proof of its qualification as outlined and required by the most recent issue of the code having jurisdiction.

      (3) Before any welder shall perform any pipe welding, submit to the Owner or his authorized agent the operator's qualification record in conformance with the provisions of the code having jurisdiction, showing that the operator was tested under the proven procedure specifications submitted.

      (4) Standard Procedure Specifications and Welders qualified by the National Certified Pipe Welding Bureau shall be considered as conforming to the requirements of these specifications.

      (5) “R” Stamp: Any welder performing modifications, repairs, etc. to boilers, pressure vessels, or other pressure retaining items shall have a current R stamp issued by the National Board of Boiler and Pressure Vessel Inspectors.

(6) “PP” Stamp: Any welder working with steam systems exceeding 15 PSIG shall have a current PP stamp issued by ASME. This shall apply up to the first stop valve for single boiler installations and up to the second stop valve for multiple boiler installations.

B. MATERIALS

(1) Welding fittings shall conform to ASA B16.9; of the same materials, thickness, etc., as the pipe being jointed; see ASA B36.10.

END OF SECTION 20 1310

SECTION 20 2100 - VALVES AND COCKS

1. GENERAL

A. The Contractor's attention is directed to the General and Special Conditions, General Conditions-Mechanical and to all other Contract Documents as they apply to this branch of the work. Attention is also directed to all other sections of the Contract Documents which affect the work of this section and which are hereby made a part of the work specified herein.

B. The Contractor shall provide all valves required to control, maintain and direct flow of all fluid systems indicated or specified. This shall include, but may not be limited to all valves of all types including balancing cocks, air cocks, lubricated plug cocks, packed plug cocks, special valves for special systems, etc., for all Mechanical Systems.

C. All valves shall be designed and rated for the service to which they are applied.

D. The following type valves shall not be acceptable: Zinc, plastic, fiber or non-metallic.

E. Ball valves with temperature and pressure ports are not an acceptable alternative to the balancing valves specified herein. Valves that do not comply with these specifications shall be removed and replaced by the Contractor with no increase in contract price.

F. Each type of valve shall be of one manufacturer, i.e., gate valves, one manufacturer, globe valves, one manufacturer, silent check valves, one manufacturer, etc. The following valve manufacturers shall be acceptable: Lunkenheimer, Tour & Anderssen, Powell, Nibco, Crane, Jenkins, T & S Brass, Walworth, Milwaukee, DeZurik, Consolidated Valve Industries, Inc., Victaulic, Bell & Gossett, Flow Design, Watts.

G. All valves shall comply with current Federal, State and Local Codes.

H. All valves shall be new and of first quality.

I. All valves shall be full line size. Valves and hydronic specialties shall not be reduced to coil or equipment connection size. Size reductions shall be made at the connection to the equipment.

J. Angle stops for plumbing fixtures shall be quarter turn ball type.

K. All valves for use in potable water systems shall comply with federal lead-free requirements that the lead content of wetted surfaces cannot exceed 0.25% by weight.

2. LOCATION OF MAINTENANCE VALVES

Maintenance valves and unions, installed so as to isolate equipment from the system shall be installed at the following locations:

A. All plumbing fixtures are to have stop valves installed under the unit for the isolation of the device. Per University standards, the stop valves are to be threaded on the inlet side of the valve with threaded or compression connections on the outlet side. Compression connections are not allowed on the inlet side of the stop valves.

B. Per University standards, isolation valves are to be installed on domestic water systems on all mains, all floor takeoff's of mains, and take-off's of branch lines where multiple devices are fed by that take-off.

C. At each air handling unit, and make–up air unit.

D. At each unit heater.

E. At each heating or cooling coil.

F. At all other locations indicated on the drawings.

3. WORKMANSHIP AND DESIGN

A. Handwheels for valves shall be of a suitable diameter to allow tight closure by hand with the application of reasonable force without additional leverage and without damage to stem, seat and disc. Seating surfaces shall be machined and finished to ensure tightness against leakage for service specified and shall seat freely. All screwed valves shall be so designed that when the screwed connection is properly made, no interference with, nor damage to the working parts of the valve shall occur. The same shall be true for sweat valves when solder or brazing is applied.

4. TYPES AND APPLICATION

A. GENERAL APPLICATIONS

(1) Per University standards for all domestic cold, hot, or recirculating water piping 2.5” or smaller, ball valves are required to be used for shutoff applications. Ball valves are to be screwed-on type. Soldered valves are not allowed.

(2) All valves shall conform to University valve pressure classification requirements. Refer to the following schedules:

VALVES 2.5” AND SMALLER

SERVICE	GATE	GLOBE	BALL	CHECK
Domestic Hot, Recirculating, and Cold Water	150	150	150	150

VALVES LARGER THAN 2.5”

SERVICE	GATE	GLOBE	BALL	CHECK
Domestic Hot, Recirculating, and Cold Water	150	150	150	150

B. GATE VALVES

Gate Valves shall be of the wedge disc type, permit straight line flow, complete shut-off and designed so that when the valve is wide open, it can be packed under pressure. Valves 1-1/2 inches and smaller shall be bronze, with ends to suit piping and non-rising stem. The valve shall have a deep stuffing box for long contact with the stem, packing gland and filled with high quality packing. Valves 2 inches thru 4 inches shall be iron body bronze mounted with flanged ends and non-rising stem. Boiler stop valves and valves larger than 4 inches shall be iron body bronze mounted flanged ends with outside screw and yoke with rising stem. Working pressure for bronze valves shall be 150 pounds and iron valves 125 pounds when installed in piping with system pressures up to 100 pounds

per square inch and 250 pounds for 100 pounds per square inch and over. 2" and under NIBCO T133, greater than 2" NIBCO F619. All gate valves 2” and smaller for use in potable water systems shall meet federal requirement to be lead free containing less than 0.25% lead by weight of wetted area. NIBCO F768B.

C. GLOBE VALVES

Globe Valves shall permit control of flow rate from full flow to complete shut-off and designed that when the valve is wide open it can be repacked under pressure, and have a deep stuffing box with gland and filled with high quality packing. Valves 1-1/2 inches and smaller shall be bronze with ends to suit piping union bonnet, and with stainless steel plug type disc and seat of not less than 500 Brinnell hardness. Valves 2 inches and larger shall be iron body bronze mounted with flanged ends, yoke bonnet, and disc guide. Working pressure for bronze valves shall be 150 pounds and iron valves 125 pounds when installed in piping with system pressures up to 100 pounds per square inch and 250 pounds for 100 pounds per square inch and over. 1-1/2" and under NIBCO T256AP, greater than 1-1/2" NIBCO F768B.

D. CHECK VALVES

Check Valves shall be horizontal swing type with two-piece hinges, disc construction seats to be bronze and bronze discs or with composition face depending on service and provide silent operation. Valves 1-1/2 inches and smaller shall be bronze with ends to suit piping, have full area "Y" pattern body and integral seats. Valves 2 inches and larger shall be iron body brass mounted and with flanged ends. Working pressure for bronze valves shall be 150 psi and iron valves 125 psi when installed in piping with system pressures up to 100 psi and 250 psi for 100 psi and over. 3" and under NIBCO T433Y, greater than 3" NIBCO F918B (for less than 100 psi systems) greater than 3” NIBCO F968B (for 100 psi or greater systems).

E. BALL VALVES (NON-POTABLE)

Ball Valves shall have removable lever handle with vinyl grip, adjustable stem gland screw, reinforced Teflon stuffing box ring, blow out proof stem, bronze body, reinforced Teflon seats, chrome plated steel ball as manufactured by Consolidated Valve Industries, Inc., Lunkenheimer, Apollo, Jenkins, Nibco or equivalent. Provide a stem extension so that the base of the handle is 1/4" above the insulation similar to Nibseal. NIBCO T5800-70.

F. BALL VALVES (POTABLE WATER)

All valves for use in potable water systems 2” and smaller contain less than 0.25% lead by weight and comply with federal lead free potable water requirements. Ball valves shall have a removable lever handle with vinyl grip, adjustable stem gland screw, reinforced Teflon stuffing box ring, blowout proof stem, stainless steel or bronze body, reinforced Teflon seats, stainless steel or chrome plate steel ball as manufactured by Apollo, Aslo, Nibco, Milwaukee, or equivalent. Provide a stem extension so that the base of the handle is ¼” above the insulation similar to Nibseal. NIBCO S-585-66-LF.

G. BUTTERFLY VALVES

Butterfly valves shall be line sized cast iron body, lug style, 200 PSI rating (bubble tight) EPT or Viton seat, cartridge type; high strength stem. Disc to have ground and polished seating surface. Operator shall be locking lever style. Quality equivalent to Crane Monarch series. 3" and under NIBCO LD3222-3, greater than 3" NIBCO LD322-5. Valves 6” and over shall have gear driven operators. For

domestic water service, provide Milwaukee Valve HP series (or equal) with stainless steel body, disc, stem, bearing, and seat.

H. BALANCING VALVES

Bell & Gossett, Model CB circuit setter balancing valve or approved equivalent. Calibrated balancing valve shall have flanged connections rated for the working pressure required for its application. Provide with brass readout valves fitted with an integral EPT insert and check valve. Each balance valve shall have a calibrated nameplate to assure specific valve settings and be constructed with internal seals to prevent leakage.

I. AIR COCKS

Straight nose; Lunkenheimer Fig. 476; bronze; tee handle; bent nose; Lunkenheimer Fig. 478, 125#; bronze; tee handle.

J. GAUGE COCKS

Straight, Lunkenheimer, Fig. 1178; 125#; bronze; tee handle. FIP.

K. LUBRICATED PLUG COCKS

2" and under; Homestead Fig. 601; 150#; semi-steel; screwed; 2-1/2" and over; Homestead Fig. 602; ±50#; semi-steel; flanged.

L. PACKED PLUG COCKS

2" and under; DeZurik Fig. 425-S; 175#; semi-steel; screwed. 2-1/2" and over; DeZurik Fig. 425-F; 175#; semi-steel; flanged.

END OF SECTION 20 2100

SECTION 20 2110 - ACCESS TO VALVES, EQUIPMENT, FILTERS, ETC.

1. GENERAL

   A. The Contractor's attention is directed to the General and Special Conditions, General Requirements-Mechanical and to all other Contract Documents as they apply to this branch of the work. Attention is also directed to all other sections of the Contract Documents which affect the work of this section and which are hereby made a part of the work specified herein.

   B. All mechanical equipment shall be installed in a manner which allows ready access to all components requiring service, adjustments, shutoff, etc.

   C. Filters shall be accessible, removable and replaceable without disconnecting mounting brackets, piping, wiring, etc.

   D. All oil cups, grease cups, grease fittings, etc. shall be accessible without disassembly of equipment, piping, ductwork, etc. (Extended oilers or grease fittings may be required).

   E. Provide access doors or panels for all equipment, valves, dampers, filters, fire dampers, etc. in concealed spaces not otherwise provided with suitable access. (Lay-in ceilings shall be considered acceptable access; splined or drywall ceilings shall not).

   F. All valves, unions, strainers, cleanouts, volume dampers, and test points shall be accessible.

   G. Access panels in lay-in ceilings shall be labeled with a lamacoid plate to indicate location of equipment, filters, valves, etc.

   H. Access panels in fire rated walls shall bear the same rating as the wall.

   I. Each fire damper shall be provided access through the duct to allow reset of the damper. This may be either a gasketed sheet metal panel over a suitable opening or a factory built access panel. The panel shall be at least one and one-half (12) inch larger than the opening all around and shall be held in place with sheet metal screws sufficiently to ensure that it is air tight. Manually check the size and location of each of these openings to ensure that the fire damper may be manually reset by use of hand only.

   J. Contractor shall coordinate the finish of all access doors and panels installed in finished areas with Architect.

2. ACCESS DOORS

   Refer to Sheet Metal and Flexible Duct section of the specifications.

END OF SECTION 20 2110

SECTION 20 2200 - INSULATION - MECHANICAL

1. GENERAL

   A. The Contractor's attention is directed to the General and Special Conditions, General Conditions-Mechanical and to all other Contract Documents as they apply to this branch of the work. Attention is also directed to all other sections of the Contract Documents which affect the work of this section and which are hereby made a part of the work specified herein.

   B. Work under this section shall include all labor, equipment, accessories, materials and services required to furnish and install all insulation, fittings and finishes for all mechanical systems specified herein and/or as indicated.

   C. Application of insulation materials shall be done in accordance with manufacturer's written recommendations. Where thickness of insulation is not specified, use applicable thickness recommended by manufacturer for specific use. Insulation shall be applied by a company regularly engaged in the application of insulation and any work deemed unacceptable by the Engineers shall be removed and properly installed at the expense of the Contractor.

2. MANUFACTURERS

   A. Insulation shall be as manufactured by Manville, Knauf, CertainTeed, Owens-Corning, Armacell or approved equivalent. Insulation sundries, adhesives, and jackets/covers shall be as made by Benjamin Foster, Zeston, Speedline, Proto, Childers, Vimasco or approved equivalent.

3. FIRE RATINGS AND STANDARDS

   A. Insulations, jackets and facings shall have composite fire and smoke hazard ratings as tested by ASTM E-84, NFPA 255 and UL 723 procedures not exceeding Flame Spread 25, Smoke Developed 50.

   B. Adhesives, mastics, tapes and fitting materials shall have component ratings as listed above.

   C. All products and their packaging shall bear a label indicating above requirements are not exceeded.

   D. Duct linings shall meet the Erosion Test Method in compliance with UL Publication No. 181.

4. GENERAL APPLICATION REQUIREMENTS

   A. Insulation shall be applied on clean, dry surfaces in a neat and workmanlike manner reflecting the best current practices in the trade. Insulation shall not be applied to piping, ductwork or equipment until tested, inspected and released for insulation.

   B. All insulation shall be continuous through walls, ceiling openings and sleeves. However, insulation shall be broken through fire walls. All covered pipe and ductwork is to be located a sufficient distance from walls, other pipe, ductwork and other obstacles to permit the application of the full thickness of insulation specified. If necessary, extra fittings and pipe are to be used. No noticeable deformation of insulation or discontinuity of vapor seal, where required, will be accepted.

   C. "Concealed", where used herein, shall mean hidden from sight as in trenches, chases, furred spaces, pipe shafts, or above hung finished ceilings. "Exposed" shall mean that piping or equipment is not "concealed" as defined above. Piping and equipment in service tunnels, mechanical equipment rooms, mechanical platform, mezzanine, penthouse, etc. storage areas, or unfinished rooms is to be considered as "exposed".

D. Existing and/or new insulation removed and/or damaged during course of construction shall be repaired or replaced as directed by the Engineer.

E. Vapor barrier jackets shall be applied with a continuous unbroken vapor seal. Do not use staples thru the jacket. NO EXCEPTIONS!

F. All insulation shall be installed with joints butted firmly together.

G. The Contractor shall ensure that all insulation (piping, ductwork, equipment, etc.) is completely continuous along all conduits, equipment, connection routes, etc. carrying cold fluids (air, water, other) and that condensation can, in no way, collect in or on the insulation, equipment, conduits, etc. Any such occurrence of condensation collection and/or damage therefrom shall be repaired solely at the expense of the Contractor.

5. PIPING SYSTEMS

A. GENERAL

(1) Bevel insulation and jacket at all points where insulation terminates at unions, flanges, valves and equipment. Note: Applies to hot water lines only; cold water lines require continuous insulation.

(2) Pipe insulation shall extend around valve bodies to above drain pans in hydronic equipment over pumps, etc. to ensure no condensation drip or collection.

(3) Factory molded fittings may be installed in lieu of built-up fittings. Jackets to be the same as adjoining insulation. Insulated fittings must have same or better K factors than adjoining straight run insulation.

(4) Valves, flanges and unions shall only be insulated when installed on piping whose surface temperature will be at or below the dew point temperature of the ambient air.

(5) Insulation shall not extend through fire and smoke walls. A UL-listed penetration system shall be used for each fire or smoke wall penetration in accordance with KBC. Materials used such as caulk, sleeves, etc. shall be manufactured by 3M, Hilti, or equal.

B. INSULATION SHIELDS

(1) Metal insulation shields are required at all pipe hangers where the piping is insulated. Metal shields shall be constructed of galvanized steel, formed to a 180-degree arc. Insulation shields shall be the following size:

PIPE SIZE	SHIELD GAUGE	SHIELD LENGTH
2" AND LESS	20	12"
2 1/2" TO 4"	18	12"
5" TO 10"	16	18"
12" AND GREATER	14	24"

C. INSULATION MATERIAL (FOR THE FOLLOWING SYSTEMS)

Insulation shall be Owens-Corning Model 25ASJ/SSL, or approved equivalent fiberglass pipe insulation with an all service jacket. The insulation shall be a heavy density, pipe insulation with a K factor .23 at 75°F mean temperature. The insulation shall be wrapped with a vapor barrier jacket. Approved manufacturers are listed in Section 2 – Manufacturers. The jacket shall have an inside foil surface with self sealing lap and a water vapor permeability of .02 perm/inch. All circumferential joints shall be vapor sealed with butt strips. All insulation shall be installed in strict accordance with the manufacturers' recommendations. The following pipes shall be insulated with the thickness of insulation as noted.

(1) Domestic Cold Water, Lab High Purity Water, Lab Deionized Water **(KDMC Projects – all 1")**

a. Piping 3'' or less – use 1/2" thick insulation. Provide an additional ½" layer of insulation 3" above and 3" below vertical pipe supports.

b. Piping 4'' or greater – use 1'' thick insulation.

(2) Hydronic System Fill Lines from Domestic Cold Water - 1/2" thick. **(KDMC Projects – 1")**

(3) Domestic 110°F Hot Water and 110°F Recirculating Hot Water. (If heat traced, see below)

a. Piping 1 ½'' or less – use 1 ½'' thick insulation.

b. Piping 2'' or greater – use 2'' thick insulation.

(4) Domestic 140°F Hot Water and 140°F Recirculating Hot Water. (If heat traced, see below)

a. Piping 1 ½'' or less – use 1 ½'' thick insulation.

b. Piping 2'' or greater – use 2'' thick insulation.

(5) Domestic Hot Water with Heat Tape for Heat Maintenance - Insulation thicknesses as required by the manufacturer to maintain water temperature.

(6) Horizontal Roof Leaders.

a. Piping 3'' or less – use 1/2" thick insulation

b. Piping 4'' or greater – use 1'' thick insulation

(7) Sanitary Sewer and plumbing fixture P-traps to waste stack – see schedule below. Insulate horizontal runs which receive air conditioning condensate and which are <u>not</u> located below slab or grade.

a. Piping 3'' or less – use 1/2" thick insulation

b. Piping 4'' or greater – use 1'' thick insulation

(8) Condensate Drain Lines.

a. Piping 1 ½'' or less – use 1/2" thick insulation

b. Piping 2'' or greater – use 1'' thick insulation

(9) Refrigerant Liquid and Suction Lines - Interior & Exterior

IMCOA, Nomaco, or Armacell closed cell polyethylene, 1.5 Lbs/Ft^3 density, 0.24 BTU-Hr.-Ft^3-°F/in at 75°F thermal conductivity, zero vapor permeance, 25/50 flame and smoke spread per NFPA 90 requirements. Elastomeric closed cell insulations that meet the above requirements are also allowed. Install insulation per the manufacturer's requirements. Provide UV protective coating for all exterior refrigerant lines.

a. All pipe sizes: 1 ½'' thick

D. JACKETS

(1) Exposed (Mechanical Rooms, Interior Finished Rooms and Storage Rooms)

All insulated piping installed in the above areas shall have a canvas or PVC jacket:

a. 6 oz. canvas jacket with fire retardant lagging. Apply to the insulation specified for the piping.

b. For all systems except steam, plenum rated PVC jacket equal to LoSmoke PVC jacket with flame/smoke rating of 25/50, ASTM-E84 test method. Minimum thickness 0.04 inches. Steam systems shall utilize plenum rated CPVC jacket with minimum thickness of 0.04 inches. Jackets shall be applied over top of specified pipe insulation. Approved equal manufacturers are Zeston and Speedline. Approved equal manufacturers are Zeston and Speedline.

(2) Exposed (Exterior)

In addition to the insulation specified for the exterior pipe, provide .016" aluminum jacket or PVC jacket 0.05" thick. The jackets shall be installed as recommended by the manufacturer to maintain water tight seal. All longitudinal and transverse seams to be sealed water tight. PVC jacket shall be Ceel-Co, Proto, or Zeston.

6. DUCTWORK SYSTEMS

A. GENERAL

(1) Duct sizes indicated are the net free area inside clear dimensions; where ducts are internally lined, overall dimensions shall be increased accordingly.

(2) Duct insulation shall extend completely to all registers, grilles, diffusers, and louver outlets, etc., to ensure no condensation drip or collection. The backs of all supply diffusers, plenums, grilles, etc. shall be insulated only if indicated by details on the drawings.

(3) All flexible duct connections on insulated ductwork shall be externally insulated.

(4) All duct outside of building envelope, including rooftop duct, duct in unconditioned attic spaces above the insulation, etc. shall have two layers of specified insulation. This shall apply to supply air, exhaust air where air is run through energy recovery unit, outside air, return air, and combustion air intake ducts.

B. EXTERNAL INSULATION

(1) Supply Air
(2) Return Air

(3) Outside Air
(4) Exhaust Air- Only from the discharge fan to the louver.

Owens/Corning “Faced Duct Wrap - Type 100", or approved equal, 2" thick fiberglass duct wrap, **1.0 pcf** density factory laminated to a reinforced foil kraft vapor barrier facing (FRK) with a 2" stapling flange at one edge. Flame spread 24, smoke developed 50, vapor barrier performance 0.02 perms per inch. K factor shall not exceed .26 at 75°F. mean temperature. Minimum R-value of the 2” thick insulation shall be 7.4 out of package and 6.0 installed.

Special Notes:

a. Do not provide externally insulated duct per the above specification for any duct that is to be painted. Insulated duct that is to be painted shall be dual wall ductwork per specification Section 231200, Sheet Metal and Flexible Duct.
b. Where supply, return, and outside air ductwork is routed through an unconditioned attic or any other space outside of the building thermal envelope, the ductwork shall be provided with a minimum of 2 layers of duct wrap for a minimum R value of 11.0. Additionally, this shall apply to exhaust ductwork on entering side of energy recovery type air handling units.

C. EXPOSED EXTERNALLY INSULATED DUCT

(1) Round. 1 ½’’ semi-rigid fiberglass tank and pipe wrap with kraft aluminum foil all service jacket vapor barrier or PSK facing. K=.27 @ 75°F. Minimum R-value shall be OK. Provide 6 oz. canvas jacket with fire retardant lagging.

(2) Rectangular. 1" rigid fiberglass industrial board with foil scrim kraft vapor barrier facing or PSK facing, 6.0 PCF density, K=.22 @ 75°F. Owens/Corning type 705. Provide 6 oz. canvas jacket with fire retardant lagging.

D. EXTERNALLY INSULATED DUCT – OUTDOORS

(1) 2" semi-rigid fiberglass industrial board with foil scrim kraft vapor barrier facing or PSK Facing, 3.0 PCF density, K=.23 @ 75°F. Minimum R-value of 8.7. Owens/Corning, or approved equivalent industrial installation type 703. Weather proofing shall be ductmastic adhesive and sealer rated for outdoor use, Hardcast Flex-Grip 550, or approved equivalent.

(2) As an alternative to duct mastic adhesive and sealer, Contractor may provide a field applied aluminum jacket meeting the following specification:

Aluminum Jacket Material: Smooth finished sheets manufactured from 0.024-inch-thick aluminum alloy complying with ASTM B209 and having an integrally bonded 10mil thick, heat-bonded polyethylene and kraft paper moisture barrier over entire surface in contact with insulation.

Aluminum Jacket Applications: Apply aluminum jacketing to all external ductwork that is externally insulated. Cover all fittings and specialties with aluminum jacketing. Provide a 2-inch overlap at longitudinal seams and end joints. Secure jacket with stainless-steel sheet metal screws 6 inches o.c. and at end joints. Overlap longitudinal seams arranged to shed water and seal end joints with weatherproof mastic.

E. INTERNALLY INSULATED DUCT – OUTDOORS

(1) In addition to the specified internal insulation, weatherproof ductwork with ductmastic adhesive and sealer, Cadoprene 725 as manufactured by Epolux Manufacturing Corp., or approved equivalent.

7. MECHANICAL EQUIPMENT

A. ROOF DRAIN SUMPS

(1) Owens-Corning Model 475-FR or approved equivalent rigid board insulation with exterior vapor barrier jacket formed to bottom of sump basin. Insulation shall have a K factor of .22 at 75°F. mean temperature. Insulation shall be 1" thick. Insulation shall be formed to roof drain sump. Vapor barrier shall remain continuous.

B. EXPANSION TANK

(1) Owens-Corning "Tank Wrap I" or approved equivalent. Insulation shall be constructed of non-combustible, flexible wool. Insulation shall be 2" thick. K factor shall be .29 at 100°F. mean temperature. Insulation shall be attached in strict accordance with the manufacturer's recommendations. All insulation shall be jacketed with 6 oz. canvas with fire retardant lagging. Coordinate with mechanical contractor to extend all piping connections, blowdown ports, etc. outside of the insulation. Additionally, for loop filters and other equipment requiring periodic service, provide removable insulated covers.

END OF SECTION 20 2200

SECTION 20 2300 - THERMOMETERS & OTHERS, MONITORING INSTRUMENTS

1. GENERAL

   A. The Contractor shall include all thermometers, pressure gauges and/or compound gauges at the locations indicated.

2. APPLICATIONS

   A. Per University standards, provide a temperature gauge in the domestic hot water and the domestic recirculating hot water piping on each floor level or each wing of the building adjacent to the required temperature sensors (refer to the controls specification and controls drawings). Mark gauge location on ceiling tiles. Refer to identification specification for additional details.

3. THERMOMETERS AND PRESSURE GAUGES

   A. All thermometers and gauges shall be readable from a standing position on the floor.

   B. Thermometers shall be linear, alcohol filled, graduated in 1°F. Or less and shall have adequate range for service intended.

   C. Pressure gauges shall be Bourdon Type, circular, 3" face, black letters on white face graduated in 2 PSI or less and shall have adequate range and shall be manufactured for service intended. Provide with pig tail connectors and gauge cocks.

   D. Pressure gauges and thermometers subject to vibration shall be mounted remotely away from vibrating pipe surface, etc., with flexible tubing.

   E. Mount thermometers in approved wells and install with thermal grease. Do not make direct contact of base with fluid in pipe.

   F. Gauges and thermometers shall be Marsh, Marshalltown, Weksler or equivalent.

4. Provide, when indicated on the plans, on the inlet and outlet of each terminal unit, a “Pete’s Plug” or equivalent pressure/temperature test station. Furnish two (2) matching thermometers and pressure gauges to the owner upon project completion.

END OF SECTION 20 2300

SECTION 20 2400 – IDENTIFICATIONS, TAGS, CHARTS, ETC.

1. GENERAL

   A. The Contractor's attention is directed to the General and Special Conditions, General Conditions-Mechanical and to all other Contract Documents as they apply to this branch of the work. Attention is also directed to all other Contract Documents which affect the work of this section and which are hereby made a part of the work specified herein.

2. VALVE TAGS AND CHARTS

   A. Valve Tags: Stamped or engraved with ¼" letters for piping system abbreviation and ½" numbers.

   B. Tag Material: Brass, 0.032 inch minimum thickness and having predrilled or stamped holes for attachment hardware.

   C. Fasteners: Brass wire-link or S-hook. Wire shall not be used as a method for connecting the tags to the valve. The tags shall be installed after insulation has been installed.

   D. All valves must have labels, both a tag on the valve and on the ceiling grid. All labels for valves must be on ceiling grid (see UK's standard for lettering below).

   E. UK's Standard for Standard Lettering:
   Attach Seton-Ply Discs to ceiling grid under equipment or to access doors in non-accessible ceiling.

EQUIPMENT: COLOR:	ENGRAVES:
Valve Yellow	V.
Fire Damper Black	F.D.
Smoke Damper Black	SM.D.
Volume Damper Black	V.D.
Terminal Unit Red	T.
Variable Volume Unit Red	V.V.
Heating Coil Blue	H.C.
Cabinet Unit Heater Red	C.H.

   F. Valve schedules: For each piping system, on 8.5x11 inch bond paper, tabulate valve number, piping system, system abbreviation (as shown on valve tag), location of valve (room or space), normal operating position (open, closed, or modulating) and variations for identifications. Mark valves for emergency shutoff and similar special uses.
      (1) Valve tag schedule shall be included in operation and maintenance data.

3. PIPING IDENTIFICATION

   A. GENERAL

      (1) Manufactured Pipe Labels: Pre-printed, color coded, with lettering indicating service and showing flow direction.

      (2) Pretensioned Pipe Labels: Precoiled, semirigid plastic formed to cover full circumference of pipe and to attach to pipe without fasteners or adhesive.

      (3) Self-Adhesive Pipe Labels: Printed plastic with contact-type, permanent-adhesive backing.

(4) Stencils: Prepared with letter sizes according to ASME A13.1.

a. Stencil Material: Fiberboard or metal
b. Stencil Paint: Exterior, gloss, acrylic enamel black unless otherwise indicated. Paint may be in pressurized spray-can.
c. Identification Paint: Exterior Acrylic enamel in colrs according to ASME A13.1 unless otherwise indicated.

(5) Pipe Label Contents: Include identification of piping service using the same designations or abbreviations as used on Drawings, pipe size, and an arrow indicating flow direction.
a. Flow Direction Arrows: Integral with piping system service lettering to accommodate both directions, or as separate unit on each pipe label to indicate flow direction.
b. Lettering size: At least 1.5”.

B. WHERE REQUIRED:

(1) Piping, whether exposed or concealed, shall be marked not less than every 15 linear feet and at the points where the piping passes through wall or floors.

(2) In mechanical rooms, piping shall be labeled every 10 feet.

4. PIPE PAINTING (REFER ALSO TO ARCHITECTURAL SECTION ON PAINTING)

A. GENERAL

(1) All exposed piping installed shall be painted according to the color coding chart hereinafter specified.

(2) “Concealed”, where used herein, shall mean hidden from sight as in trenches, chases, furred spaces, pipe shafts, or above hung finished ceilings. “Exposed” shall mean that piping or equipment is not “concealed” as defined above. Piping and equipment in service tunnels, mechanical equipment rooms, storage areas, or unfinished rooms is to be considered as “exposed”.

(3) Paint all equipment and metal surfaces which are not factory finished (and all damaged or rusted surfaces) in high grade rust proofing machinery enamel. Pay particular attention to flanges, valves, unions, etc., where condensation may collect.

(4) Paint exposed pipe (whether insulated or bare) and exposed surfaces (tanks, etc.).

(5) All piping shall be painted in accordance with the following color coding chart.

University of Kentucky Standard Color Coding for Mechanical Piping			
TYPE OF SERVICE	MARKINGS	COLOR	NO.*
High Pressure steam and return (over 76 psig)	H.P.S. & H. P. R.	Safety Red	SW4081
Medium pressure steam and return (21 psig to 75 psig)	M.P.S. & M. P. R.	International Orange	SW4082
Low pressure steam and return (0 psig to 20	L.P.S. & L. P. R.	Safety Orange	SW4083

psig)			
Domestic cold water	D.C.W.	Safety Green	SW4085
Domestic hot water	D.H.W.	Green Byte	SW4076
Medium temperature hot water & return (300F or less)	M.T.H.W. & M.T.H.W.R.	Safety Yellow	SW4084
Reheat supply & return	R.S. & R.R.	Junction Yellow	SW4033
Chilled water supply & return	C.W.S. & C. W. R.	Safety Blue	SW4086
Condenser water supply & return	C.D.W.S. & C.D.W.R	Slate Gray	SW4026
Natural gas	GAS	Deck Red	SW4040
Safety valve vents	S.V.V.	Galvano	SW4027
Cast iron soil & waste vents	W. & V.	Vacuum Black	SW4032
Chilled hot water	C.H.W.	Galvano	SW4027
Air (steel pipe)	AIR	Galvano	SW4027
Air (copper pipe)	AIR	None	--
Vacuum (copper pipe)	VAC	None	--
Vacuum (steel pipe)	VAC	Galvano	SW4027
Roof leaders	R. L.	Galvano	SW4027
Soft water	S.W.	Pillar White	SW4029
De-mineralized water	D.W.	None	--
Distilled water	DIST. W.	None	--
Diesel fuel	D. FUEL	Galvano	SW4027
Nitrogen	NITROGEN	Galvano	SW4027
Elevator oil lines	E.O.L.	Galvano	SW4027
Muriatic acid	MUR. ACID	Galvano	SW4027
Sulfuric acid	SUL. ACID	Galvano	SW4027
Chromate or cooling tower additives	C.T.A.	Galvano	SW4027
Boiler treatment	B.T.	Galvano	SW4027
Gasoline	GASOLINE	Galvano	SW4027
Nitrous oxide (copper)	N. OXIDE	None	--
Caustic soda	C. SODA	Galvano	SW4027
Condensate pump discharge	COND. P. D.	Galvano	SW4027
Sump pump discharge	S. PUMP DIS.	Galvano	SW4027
Oxygen	OXYGEN	None	--
Fire suppression/sprinkler system	FIRE	Safety Red	SW4081
Ammonia	AMMONIA	Bolt Brown	SW4001
Glycol solutions	GLYCOL	Rotor Turquoise	SW4066
Freon – R500	FREON R-500	Junction Yellow	SW4033
Freon – R502	FREON R-502	Recycled Red	SW4073

Notes: *Color and number are from the Sherwin Williams System 4000 color selection guide dated 1999.

A. Water heaters, storage tanks, heat exchangers, etc., shall be painted light gray.
B. Piping, whether exposed or concealed, shall be marked not less than every 15 linear feet and at the points where the piping passes through wall or floors.

C. In mechanical rooms, piping shall be labeled every 10 feet.

5. EQUIPMENT IDENTIFICATION

A. All equipment, except in finished rooms, shall be identified per University standards and shall conform to the following requirements:
   (1) Material and Thickness: Mulitlayer, multicolor, plastic labels for mechanical engraving, 1/8 inch thick and having predrilled holes for attachment hardware.
   (2) Letter Color: Black
   (3) Background Color: White
   (4) Maximum Temp: Able to withstand temperatures up to 160 deg F.
   (5) Minimum label size: Length and width vary for required label content, but not less than 2.5” by .75”.
   (6) Minimum Letter Size: .25” for name of units if viewing distance is less than 24 inches, ½” for viewing distances up to 72” and proportionally larger lettering for greater viewing distances. Include secondary lettering two-thirds to three-fourths the size of the principal lettering.
   (7) Fasteners: Stainless-steel rivets or self-tapping screws.
   (8) Label Content: Include equipment’s drawing designation or unique equipment number, drawing numbers where equipment is indicated (plans, details, and schedules), plus the specification section number and title where equipment is specified.
   (9) Equipment label schedule: Refer to IOM Requirements.

6. DUCTWORK IDENTIFICATION

A. All ductwork shall be identified as to the service of the duct and direction of flow.

B. Manufactured Duct Labels: Pre-printed, color coded, with lettering indicating service and showing flow direction.

C. Pretensioned Duct Labels: Precoiled, semirigid plastic formed to cover full circumference of pipe and to attach to pipe without fasteners or adhesive.

D. Self-Adhesive Duct Labels: Printed plastic with contact-type, permanent-adhesive backing.

E. Stencils: Prepared with letter size minimum of 1-1/4 inches.

   a. Stencil Material: Fiberboard or metal
   b. Stencil Paint: Exterior, gloss, acrylic enamel black unless otherwise indicated. Paint may be in pressurized spray-can.
   c. Identification Paint: Exterior Acrylic enamel in colrs according to ASME A13.1 unless otherwise indicated.

F. Duct Label Contents: Include identification of duct service using the same designations or abbreviations as used on Drawings, duct size, and an arrow indicating flow direction.

   a. Flow Direction Arrows: Integral with piping system service lettering to accommodate both directions, or as separate unit on each pipe label to indicate flow direction.

   b. Lettering size: At least 1.5”.

7. ACCESS THROUGH LAY-IN CEILINGS

A. Mark the ceiling T-bar nearest the ceiling panel access to equipment, valves, damper, filter, duct heaters, etc., with a small red lamacoid plate with name of item above ceiling.

8. EXECUTION

A. Preparation: Clean piping, duct, and equipment surfaces of substances that could impair bond of identification devices, paint, etc. including dirt, oil, grease, release agents, and incompatible primers, paints, and encapsulants.

B. Equipment Label Installation:

(1) Install or permanently fasten labels on each major item of mechanical equipment.
(2) Locate equipment labels where accessible and visible.

C. Pipe Label Installation:

(1) Piping Color-Coding: Painting of piping as specified.
(2) Stenciled Pipe Label Option: Stenciled labels may be provided instead of manufactured pipe labels, at installers option. Install stenciled pipe labels with painted, color coded bands or rectangles on each piping system.

a. Identification Paint: Use for contrasting background.

b. Stencil Paint: Use for Pipe Marking

(3) Locate Pipe Labels where piping is exposed or above accessible ceiling in finished spaces, machine rooms, accessible maintenance spaces such as shafts, tunnels and plenums and exterior exposed locations as follows:

a. Near each valve and control devices.

b. Near each branch connection, excluding short takeoffs for fixtures and terminal units. Where flow pattern is not obvious, mark each pipe at branch.

c. Near penetrations through walls, floors, ceilings, and inaccessible enclosures.

d. At access doors, manholes, and similar access points that permit view of concealed piping.

e. Near major equipment items and other points of origination and termination.

f. Spaced at maximum intervals of 25 feet along each run. Reduce intervals to 25 feet in areas of congested piping and equipment.

g. On piping above removable acoustical ceilings. Omit intermediately spaced labels.

h. Space every 10’ in mechanical rooms.

END OF SECTION 20 2400

SECTION 20 2500 - HANGERS, CLAMPS, ATTACHMENTS, ETC.

GENERAL

A. The Contractor's attention is directed to the General and Special Conditions, General Provisions - Mechanical and to all other Contract Documents as they apply to this branch of the work. Attention is also directed to other sections of the Contract Documents which affect the work of this section and which are hereby made a part of the work specified in this section.

B. Each Contractor's attention is also directed to Section 201300, Pipe, Pipe Fittings and Pipe Support.

C. This section includes, but is not limited to, furnishing and installing dampers, supports, anchors, and accessories for piping, ductwork, equipment, etc. Furnishing and installing shall be by each trade for the completion of their work.

D. Power driven anchors and expansion anchors shall be permitted only when permission is granted in writing by the Architect and Engineer.

2. MATERIALS AND EQUIPMENT

A. Hangers, Clamps, Attachments, Etc.:

	SIZE	SPECIFICATION
1. Pipe Rings	2" pipe and smaller	Adjustable swivel split ring or split pipe ring, Grinnell Figures 104 and 108, Elcen, Fee & Mason, or approved equivalent.
2. Pipe Clevis	2-1/2" pipe and larger	Adjustable wrought Clevis type, Grinnell Figure 260, Elcen, Fee & Mason, or approved equivalent.
3. Pipe Clevis	All	Steel Clevis for insulated pipe, Elcen Figure 12A, Grinnell, Fee & Mason or approved equivalent.
4. Rise Clamps	All	Extension pipe or riser clamp, Grinnell Figure 261, Elcen, Fee & Mason or approved equivalent.
5. Beam Clamps and Attachments	All	Grinnell Figure numbers listed or, Elcen, Fee & Mason, or approved equivalent. Malleable beam clamp with extension piece figure 229; I-beam clamp figure 131; C-clamp figures 83, 84, 85, 86, 87, and 88.
6. Brackets	All	Welded steel brackets medium weight, Grinnell Figure 195, Elcen, Fee & Mason or approved equivalent.
7. Concrete Inserts	All	Grinnell Figure numbers listed or, Elcen, Fee & Mason or approved equivalent. Wrought steel insert Figure 280 and wedge type insert Figure 281.

8. Concrete Fasteners	All	Self-drilling concrete inserts, Phillips, Grinnell, Elcen or approved equivalent.
9. Ceiling	All	Grinnell Figure numbers listed or Elcen, Fee & Mason, or approved equivalent. Pipe hanger flange Figure 153, adjustable swinging hanger flange Figure 155, ceiling flanges Figures 128 and 128R, and adjustable ceiling flange Figure 116.
10. Rod Attachments	All	Grinnell Figure numbers listed or Elcen, Fee & Mason, or approved equivalent. Extension piece Figure 157, rod coupling Figure 136, and forged steel turnbuckle Figure 230.
11. U-Bolts	All	Standard, U-bolt, Grinnell Figure 137, Elcen, Fee & Mason, or approved equivalent.
12. Welded Pipe Saddles	All	Pipe covering protection saddle sized for thickness of insulation, Grinnell Figure 186, Elcen, Fee & Mason or approved equivalent.
13. Pipe Roll	All	Adjustable swivel pipe roll, Grinnell Figure 174, Elcen, Fee & Mason, or approved equivalent.
14. Protection Saddle	All	18-gauge sheet metal pipe protection saddle, Elcen Figure 219, Fee & Mason, Power Strut, or approved equivalent.
15. Hanger Rods	All	Steel, diameter of the hanger threading, ASTM A-107.
16. Miscellaneous Steel	All	Steel angles, rods, bars, channels, etc., used in framing for supports and fabricated brackets, anchors, etc., shall conform to ASTM-A-7.
17. Concrete Channel Inserts	All	Continuous slot inserts, Unistrut, or approved equivalent. Heavy duty Series P-3200 or Light Duty Series P-3300 as required.
18. Adjustable Spot Insert	All	Adjustable spot insert Unistrut, or approved equivalent, P-3245. Design load 1000 lbs.

3. INSTALLATION

A. Unless otherwise specifically indicated or hereinafter specified in the specifications, all supporting, hanging and anchoring of piping, ductwork, equipment, etc., shall be done by each trade as is necessary for completion of the work and shall be as directed in the following paragraphs:

(1) Supporting and hanging shall be done so that excessive load will not be placed on any one hangers so as to allow for proper pitch and expansion of piping. Hangers and supports shall be placed as near as possible to joints, turns and branches.

(2) For concrete construction, utilize adjustable concrete inserts for fasteners. Expansion anchors and power-driven devices may be used when approved in writing by the Architect/Engineer. Utilize beam clamps for fastening to steel joists and beams and expansion anchors in masonry construction. When piping is run in joists, piping shall be top mounted on trapeze type hangers with each pipe individually clamped to trapeze hanger.

(3) Trapeze hangers shall be supported by steel rods of sufficient diameter to support piping from joists or concrete construction. Where desired or required, piping may be double mounted on trapeze hangers. Where conditions permit, trapeze hangers may be surface mounted on exposed joists by means of approved beam clamps, or to concrete construction by means of approved adjustable inserts or expansion anchors.

(4) Install all miscellaneous steel other than designed building structural members as required to provide means of securing hangers, supports, etc., where piping does not pass directly below or cross steel joists.

(5) Piping shall not be supported by the equipment to which it is connected. Support all piping so as to remove any load or stress from the equipment.

(6) Where piping, etc., is run vertically, approved riser clamps, brackets or other means shall be utilized at approximately 10'-0" center to center minimum and an approved adjustable base stand or fitting on concrete support base shall be utilized at the base of the vertical run.

(7) Where piping is run along walls, knee braced angle frames or pipe brackets with saddles, clamps, and rollers (where required) mounted on structural brackets fastened to walls or columns shall be used.

(8) Support all ceiling hung equipment, with approved vibration isolators.

(9) Where copper tubing is specified, hangers shall be of copper clad type when piping is uninsulated.

(10) Uninsulated piping hung from above shall be supported with ring and clevis type pipe hangers. Uninsulated piping mounted on trapeze and wall bracket type support shall be held in place with U-bolts. U-bolts shall allow for axial movement in the piping.

(11) All insulated piping shall be supported with clevis type and/or pipe roll hangers. Hangers shall be sized to allow the pipe insulation to pass through the hangers. Install insulation protection saddles at all hanger locations. Welded pipe saddles shall be installed at all hangers on piping 5" and larger. The pipe saddles shall be sized for the thickness of insulation used. Hangers shall fit snugly around outside of insulation saddles.

(12) Under no conditions will perforated band iron or steel wire driven hangers be permitted.

(13) In general, support piping at the following spacing:

a. Steel and copper piping - 5 feet intervals for piping 3/4" and smaller. 6 feet intervals for 1 ¼" and 1" pipe. 8-foot intervals for piping 1 ½" to 3". 10-foot intervals piping 3 ½" and larger.

b. Polyethylene piping – 4-foot intervals for piping 2" and smaller. 5-foot intervals for 3" pipe. 6-foot intervals for 4", 6", and 8" pipe. 7-foot intervals for 10" and larger pipe.

c. PVC piping – 4-foot intervals for piping 1 1/2" and smaller. 5-foot intervals for 2 and 2 ½" piping. 6-foot intervals for 3" pipe and larger.

d. Where the manufacturer of the pipe has more strict guidelines, the manufacturer's recommendations shall be followed.

END OF SECTION 20 2500

SECTION 20 3100 - TESTING, BALANCING, LUBRICATION AND ADJUSTMENTS

1. GENERAL

A. The General Conditions, Instructions to Bidders, Section 200100, and other Contract Documents are a part of this specification and shall be binding on all Mechanical Contractors. It shall be each Contractor's responsibility to apprise himself of all information pertinent to his work prior to submitting his proposal. No adjustments will be made in this Contract which are a result of failure to comply with this requirement.

B. The Engineer, or his authorized representative, shall be notified by the Contractor twenty-four (24) hours in advance of any tests called for in these specifications or required by others. Any leaks or imperfections found shall be corrected and a new test run to the satisfaction of the Engineer or his authorized representative. Upon completion of a test, a written approval of that part of the work will be given to the Contractor. Only after written approval, signed by the Engineer, shall the Contractor apply insulation or paint or allow his work to be furred-in. This written approval, however, does not relieve the Contractor of the responsibilities for any failure during the guarantee period. The expense of all tests shall be borne by the Contractor, along with all temporary equipment, materials, gauges, etc. required for tests.

2. PLUMBING

A. Piping shall be tested before being insulated or concealed in any manner. Where leaks or defects develop, required corrections shall be made and tests repeated until systems are proven satisfactory.

B. Water piping systems shall be subjected to a hydrostatic test of one hundred fifty pounds. The system shall be proven tight after a twenty-four (24) hour test.

C. The house drain line, interior storm sewers, interior rain water conductors, and all soil, waste and vent piping shall be subjected to a hydrostatic test of not less than a 10-foot head or an air test of not less than 5 lbs. per sq. inch using a mercury column gauge and shall hold for 15 minutes.

D. Exterior sewer lines to the termination point outside the building shall be subject to a ten-foot hydrostatic test or an approved smoke test. These lines shall be subjected to a second test after 2 feet of backfill has been properly installed.

E. After fixtures have been installed, the entire plumbing system, exclusive of the house sewer, shall be subjected to an air pressure test equivalent to one-inch water column and proven tight. The Contractor responsible shall furnish and install all of the test tees required, including those for isolating any portion of the system for tests.

F. The Contractor shall perform all additional tests that may be required by the Kentucky Department of Health or other governing agency.

G. Set temperature control on water heaters and adjust tempering valves as required. Per University standards, hot water shall be maintained at 120 deg F.

H. Any leaks or imperfections found shall be corrected and a new test run until satisfactory results are obtained. The cost of repair or restoration of surfaces damaged by leaks in any system shall be borne by the Contractor.

I. The compressed air system shall be tested for leaks for eight (8) hours at 250 PSI.

J. The natural gas piping shall be tested in accordance with requirements and/or recommendations of the local gas company.

K. The domestic hot water recirculation system balancing shall be performed. The system shall be balanced as often as necessary to obtain desired system operation and results.

3. HEATING, VENTILATING AND AIR CONDITIONING

A. All piping shall be tested before being insulated or concealed in any manner. Where leaks or defects develop, required corrections shall be made and tests repeated until systems are proven satisfactory. Water piping systems shall be subjected to a hydrostatic test of not less than one hundred pounds and shall be proven tight after a twenty-four (24) hour test.

B. All motors, bearings, etc. shall be checked and lubricated as required. All automatic, pressure regulating and control valves shall be adjusted. Excessive noise or vibration shall be eliminated.

C. Thermometers and gauges shall be checked for accuracy. If instruments are proven defective, they shall be replaced.

D. For all balance valves, include pressure drop and balance valve setting in the final balance reports.

E. System balancing, where required, shall be performed only by persons skilled in this work. The system shall be balanced as often as necessary to obtain desired system operation and results.

F. All fan belts shall be adjusted for proper operation of fans. If sheaves are required to obtain the air flows specified, the Contractor shall provide them.

G. The Contractor shall adjust all pump drives or balancing valves to obtain water flow specified. The Contractor shall also provide and change pump impellers, if required, to obtain flows specified.

H. The Contractor shall perform and be responsible for lubrication of all equipment prior to operation. Equipment damaged by failure to perform proper lubrication shall be repaired at his expense.

I. For the purpose of placing the heating, ventilating and air conditioning system in operation according to design conditions and certifying same, final testing and balancing shall be performed in complete accordance with AABC Standards for Field Measurements and Instrumentation Form No. 81266, Volume One, for air and hydronic systems as published by the Associated Air Balance Council. The Contractor shall procure the services of an AABC or NEBB Certified company, approved by the Engineer, that specializes in and whose business is to balance and test mechanical systems. The Balance Contractor must be independent and may not be a Branch or Company owned by any other Contractor on the project.

J. Instruments used for testing and balancing of air and hydronic systems shall have been calibrated within a period of six months prior to balancing. All final test analysis reports shall include a letter of certification listing instrumentation used and last date of calibration.

K. The temperature controls supplier shall provide thorough training, all required software and cable connections to the test and balance trades for use in balancing the systems.

L. Per University standards, the TAB contractor will conduct an inspection of the mechanical installation at 30% and 70% completion. A report on the installation will be given to the prime contractor listing items to be corrected and addressed prior to the TAB contractor beginning TAB work.

M. The Contractor must submit any list of interim deficiencies and preliminary balance reports to the Engineer prior to final balance. The Contractor shall make all necessary corrective measures prior to the final balance report submittal.

N. Four (4) copies of the complete test reports shall be submitted to the Consulting Engineer prior to final acceptance of the project. The TAB report is to be in a letter-sized binder with cover and edge title, introduction information, index, a set of drawings, equipment identification, data sheets, etc. A TAB report is to accompany each M&O manual required.

O. The Contractor shall provide and coordinate their work in the following manner:

(1) Provide sufficient time before final completion date so that tests and balancing can be accomplished.

(2) Provide immediate labor and tools to make corrections when required without undue delay.

(3) The Contractor shall put all heating, ventilating and air conditioning systems and equipment and range hood system into full operation and shall continue the operation of same during each working day of testing and balancing.

(4) Provide a fan curve with balance report for each fan with a flow of greater than or equal to 2,000 CFM.

(5) Per University standards, the TAB field work is to be conducted in both the heating and cooling mode of operation. This may require the contractor to return to the site after seasonal change-over.

(6) Per University standards, the TAB work shall be performed only after all equipment and controls have been installed and all systems are 100% functional.

P. Balance all water and air systems. Be sure to include:

(1) Balance all Air Handlers.

(2) Balance all supply, return, and exhaust air grilles to within 10% of design air flow rate.

(3) Balance all exhaust air fans and record inlet static pressure.

(4) Domestic Hot Water Recirculating System.

Q. Automatic Flow Control Balance Valves

(1) Verify that each installed automatic flow control device matches the GPM indicated on the drawings.

(2) Verify that the actual pressure at each automatic flow control device is within the pressure limits specified by the valve manufacturer.

(3) Include documentation of the above information for each control device in the final balance report.

4. FIRE PROTECTION SYSTEM

A. Test in accord with local Fire Marshal requirements and/or requirements or recommendations of NFPA Regulations.

5. AQUISITION OF DOCUMENTS

The general contractor or construction manager shall furnish one set of all documents, addenda, change orders, shop drawings, etc to the balance contractor for his use.

6. TESTING, ADJUSTING, AND BALANCING TO BE PERFORMED UNDER SEPARATE CONTRACT

A. GENERAL

(1) Related Documents

a. All Divisions 200000 through 250000 specification sections, drawings, and general provisions of the contract apply to work of this section, as do other documents referred to in this section.

(2) Scope of Work

a. The CM will directly contract with a certified testing, adjusting, and balancing (TAB Agency) to test, adjust, and balance the HVAC systems.

b. This specification section is included herein to assist and inform the Contractor of the standards, requirements and scope of the work to be performed by the Commonwealth's TAB Contractor.

(3) Preparation and Coordination Requirements – General

a. Shop drawings, submittal data, up-to-date revisions, change orders, and other data required for planning, preparation, and execution of the TAB work shall be provided to the TAB Agency no later than 30 days prior to the start of TAB work.

b. System installation and equipment startup shall be complete prior to the TAB Agency's being notified to begin.

c. The building control system shall be complete and operational. The Building Control system contractor shall install all necessary computers and computer programs, and make these operational. Assistance shall be provided as required for reprogramming, coordination, and problem resolution.

d. All test points, balancing devices, identification tags, etc., shall be accessible and clear of insulation and other obstructions that would impeded TAB procedures.

e. Qualified installation or startup personnel shall be readily available for the operation and adjustment of the systems. Assistance shall be provided as required for coordination and problem resolution.

(4) Preparation and Coordination Requirements - HVAC Controls

a. Written notice shall be submitted through the General Contractor to the Architect stating that the Control System is operating and controlling the HVAC System.

b. The control subcontractor shall have entered all data needed for the TAB Agency to begin work.

c. The control subcontractor shall be available to correct any problems that the TAB Agency might have with the systems.

d. All costs for additional work by the TAB Agency due to the Contractor's failure to comply with the above shall be paid by the Contractor and any subcontractor(s) for HVAC controls.

(5) Preparation and Coordination Requirements – Mechanical

a. Written notice shall be submitted through the General Contractor to the Architect stating that the HVAC system is operational and ready for the TAB Agency.

b. The mechanical subcontractor shall have proved all units operational and all air outlets in the full open position.

c. The mechanical contractor shall be available to correct any problems that the TAB Agency might have with any equipment or systems.

d. The mechanical contractor shall furnish and install any replacement sheaves, pulleys and drive belts required for flow adjustments, as determined by the TAB Agency. Adjustable sheaves shall be selected so that the final adjustment position is in the middle third of the total adjustment range.

e. All costs for additional work by the TAB Agency due to the Contractor's failure to comply with the above shall be paid by the Contractor and any subcontractor(s) for mechanical work.

(6) Preparation and Coordination Requirements – Ductwork

a. Ductwork air leakage testing shall be performed by the TAB Agency.

b. The ductwork/sheetmetal subcontractor shall promptly correct any related problems discovered by the leakage tests.

c. All costs associated with retesting and/or delays or other problems which impede the TAB Agency from performing such testing shall be paid by the Contractor and any subcontractor(s) for ductwork.

(7) Work by TAB Agency

a. The work included in the remainder of this section consists of furnishing labor, instruments, and tools required in testing, adjusting and balancing the HVAC systems, as described in these specifications or shown on accompanying drawings. Services shall include checking equipment performance, taking the specified measurements, and recording and reporting the results. This work shall be performed by the TAB Agency under direct contract to the Owner. The remainder herein is also for the information of the Contractor and all subcontractors.

b. The TAB agency shall provide lifts, scaffolding, etc. as required to balance devices in areas with high ceilings such as gymnasiums, auditoriums, atriums, cupolas, etc.

c. The items requiring testing, adjusting, and balancing include the following:

Air Systems:

Supply Fan AHU
Return Fans
Relief Fans
Exhaust Fans
Zone Branch and Main Ducts
Diffusers, Registers and Grilles
Coils (Air Temperatures)
Ventilation Fans

(8) Qualifications

a. Agency Qualifications: The TAB Agency shall be a current member of a nationally recognized balance organization (National Organization). This Organization shall provide the Owner with National Guarantee document certifying the work of the TAB Agency. Acceptable organizations are Associated Air Balance Council (AABC) or National Environmental Balancing Bureau (NEBB).

1) The selected TAB Agency must provide proof of certification for the total project (air, water, sound, vibration, etc.).

2) The selected TAB Agency shall possess computers, cables, and software needed to operate the building control system. This requires the TAB Agency to be properly licensed and/or trained to run the Control Contractor's software.

(9) Definitions, References and Standards

a. All work shall be in accordance with the latest edition of the National Standards, as published by the National Organization affiliated with the TAB Agency.

(10) Submittals

a. Qualifications: The TAB Agency shall submit a company resume listing personnel and project experience in air and hydronic system balancing and a copy of the Agency's test and balance engineer (TBE) certificate. Certification in noise, vibration, and air quality shall be submitted as the job requires.

b. Procedures and Agenda: The TAB Agency shall submit the TAB procedures and agenda proposed to be used.

(11) Reports

a. Final TAB Report: The TAB Agency shall submit the final TA report for review by the Engineer. All outlets, devices, HVAC equipment, etc., shall be identified, along with a numbering system corresponding to report unit identification. The TAB Agency shall submit a National Project Performance Guaranty assuring that the project systems were tested, adjusted and balanced in accordance with the project specifications and National Standards.

b. Submit 3 copies of the Final TAB Report.

(12)Deficiencies

a. Any deficiencies in the installation or performance of a system or component observed by the TAB Agency shall be brought to the attention of the appropriate responsible person. Also notify the mechanical project representative from the Division of Engineering.

b. The work necessary to correct items on the deficiency listing shall be performed and verified by the affected contractor before the TAB Agency returns to retest. Unresolved deficiencies shall be noted in the final report.

B. INSTRUMENTATION

All instruments used for measurements shall be accurate and calibrated. Calibration and maintenance of all instruments shall be in accordance with the requirements of the National Standards.

(1) General

a. The specific systems shall be reviewed and inspected for conformance to design documents. Testing, adjusting and balancing on each identified system shall be performed. The accuracy of measurements shall be in accordance with National Standards. Adjustment tolerances shall be + or - 10% unless otherwise stated.

b. Equipment settings, including manual damper quadrant positions, manual valve indicators, fan speed control levers, and similar controls and devices shall be marked to show final settings.

c. All information necessary to complete a proper TAB project and report shall be per National Organization's standards unless otherwise noted. The descriptions for work required, as listed in this section, are guides to the minimum information needed.

(2) Air Systems

a. The TAB Agency shall verify that all ductwork, dampers, grilles, registers, and diffusers have been installed per design and set in the full open position. The TAB Agency shall perform the following TAB procedures in accordance with the National Standards:

For Supply Fans:

1) Fan Speeds - Test and adjust fan RPM to achieve maximum or design CFM. Confirm proper rotation direction.

2) Current and Voltage - Test and record motor voltage and amperage, and compare data with the nameplate limits to ensure fan motor is not in or above the service factor.

3) Pitot-Tube Traverse - Perform a Pitot-tube traverse of main supply and return ducts, as applicable to obtain total CFM.

4) Outside Air - Test and adjust the outside air on applicable equipment using a Pitot-tube traverse. If a traverse is not practical use the mixed/air temperature method if the inside and outside temperature difference is at least 20 degrees Fahrenheit or use the difference between Pitot-tube traverses of the supply and return air ducts.

5) Static Pressure - Test and record system static profile of each supply fan.

For Return Fans:

1) Fan Speeds - Test and adjust fan RPM to achieve maximum or design CFM. Confirm proper rotation direction.

2) Current and Voltage - Test and record motor voltage and amperage, and compare data with the nameplate limits to ensure fan motor is not in or above the service factor.

3) Pitot-Tube Traverse - Perform a Pitot-tube traverse of the main return ducts to obtain total CFM.

4) Static Pressure - Test and record system static profile of each return fan.

For Relief Fans:

1) Fan Speeds - Test and adjust fan RPM to achieve maximum or design CFM. Confirm proper rotation direction.

2) Current and Voltage - Test and record motor voltage and amperage, and compare data with the nameplate limits to ensure fan motor is not in or above the service factor.

3) Static Pressure - Test and record system static profile of each relief fan.

4) Pitot-Tube Traverse - If possible, per system ductwork, perform a traverse to determine relief air CFM.

For Exhaust Fans:

1) Fan Speeds - Test and adjust fan RPM to achieve maximum or design CFM. Confirm proper rotation direction.

2) Current and Voltage - Test and record motor voltage and amperage, and compare data with the nameplate limits to ensure fan motor is not in or above the service factor.

3) Pitot-Tube Traverse - Perform a Pitot-tube traverse of main exhaust ducts to obtain total CFM.

For Zone, Branch and Main Ducts:

1) Adjust ducts to within design CFM requirements. As applicable, at least one zone balancing damper shall be completely open. Multi-diffuser branch ducts shall have at least one outlet or inlet volume damper completely open.

For Diffusers, Registers and Grilles:

1) Tolerances - Test, adjust, and balance each diffuser, grilles, and register to within 10% of design requirements.

2) Adjust all adjustable diffusers to minimize air drafts and eliminate suspended light fixture sway.

3) Adjustable diffusers in spaces with ceilings taller than 9 feet shall be adjusted to eliminate air stratification during heating season.

4) Identification - Identify the type, location, and size of each grille, diffuser, and register. This information shall be recorded on air outlet data sheets.

For Coils:

1) Air Temperature - Once air flows are set to acceptable limits, take wet bulb and dry bulb air temperatures on the entering and leaving side of each cooling coil. Dry-bulb temperature shall be taken on the entering and leaving side of each heating coil.

END OF SECTION 20 3100

SECTION 21 0100 - FIRE PROTECTION SYSTEM

1. GENERAL

A. The General Conditions, Instructions to Bidders, Section 200100, 1. A, and other Contract Documents are a part of this specification and shall be binding on the Contractor. It shall be the Contractor's responsibility to apprise himself of all information pertinent to his work prior to submitting his proposal. No adjustments will be made in this Contract which is a result of failure to comply with this requirement.

B. No Contractor, other than those regularly engaged in the installation of approved and franchised automatic sprinkler systems, will be considered or approved for the work under this section of the specifications. Bidders must have had not less than five (5) years experience in the fabrication and erection of such systems: wet, dry and rack storage types, and shall have completed installations similar and equivalent in scope to this system under approval by one or more of the recognized Underwriting Associations in the Insurance Field.

C. Before submitting bid, examine all Mechanical, Architectural, and Structural Drawings, visit the site and become acquainted with all conditions that may, in any way whatsoever, affect the execution of this work. Also, the Contractor shall coordinate with the rating bureau and insuring agency to verify adequacy of water supply for the proposed sprinkler system extension.

D. The Contractor shall take his own measurements and be responsible for exact size and location of all openings required for installation of this work. Figured dimensions where indicated are reasonably accurate and should govern in setting out work. Detailed method of installation is not indicated. Where variations exist between described work and approved practice, the Engineer shall be consulted for directive.

E. It is the intent of the Plans and Specifications to provide a general layout only and locate major equipment, piping, etc. Variations in head locations, pipe routing, etc., may be anticipated by the Contractor and shall be coordinated with all other trades and indicated on the drawings and descriptive literature called for hereinafter. It shall be the express responsibility of the Contractor to provide all required materials and equipment and perform all work required to install a complete and approved installation.

F. All materials and methods shall be in accordance with applicable codes, regulations and/or ordinances and meet approval of local inspection authority and the State Fire Marshal. Also, all work shall comply with the latest editions of the National Board of Fire Underwriters, National Fire Protection Association, OSHA Regulations, the National Building Code, the Life Safety Code, IMC Code and the Southern Building Code (Where applicable). The local insuring agency shall review plans prepared and submitted by the Contractor but shall have no authority to make changes once work has begun.

G. All work performed under this section shall be accomplished in close harmony with all other trades. All work not so coordinated shall be removed and reinstalled at the expense of the Contractor.

H. The Contractor shall submit a proposed layout to the Engineer prior to submittal to the Fire Marshal's Office.

I. Per University standards, provide labels on ceiling grid and/or at access panels to locate concealed valves and switches. Refer to section 202400 for additional requirements.

2. SCOPE OF WORK

A. Furnish all material, labor, tools, equipment and supervision required for installation of a complete fire protection and stand pipe system as indicated on the project drawings. Include all necessary piping, sprinkler heads, test connections, valves, drains, cabinets, siamese connections, fire hydrants, fire pump, etc.

B. The Contractor shall provide flushing and sterilization of all water lines in accordance with current Kentucky Plumbing Codes, Rules and Regulations and shall make connection to domestic water mains in accord with current rules and regulations of the State Department of Sanitary Engineering and Division of Water.

C. Per University standards, provide stand pipes with 2-1/2 inch connections in a labeled cabinet with glass breakout panel. Do not provide with fire hose or 1-1/2 inch connection.

D. Provide sprinklers in attics, overhangs, awnings, cooler/freezers, in accessible spaces and all other areas required by NFPA and the local fire authority.

E. Provide dry pipe systems or freeze proof heads as required to provide continuous coverage without freezing.

3. WATER SUPPLIES AND SYSTEM LAYOUT CRITERIA

A. Where flow and pressure data are available, they are indicated on the project drawings. The Contractor shall independently verify all such information and notify the engineer of any discrepancies discovered prior to beginning the work. Where no flow information is indicted on the project drawings, the Contractor shall obtain it and indicate it on the shop drawing submittal.

B. Piping systems shall be hydraulically sized based on the most conservative flow information obtained. No adjustments in the contract amount will be allowed for failure of the Contractor to obtain adequate flow information.

C. Per University standards, water velocity in sprinkler pipes is not to exceed 32 ft/sec.

D. Per University standards, all newly installed sprinkler systems must be fully flow-tested by the Contractor in the presence of the Consultant's engineer, University Project Manager, and the University Fire Marshall.

4. DRAWINGS AND DESCRIPTIVE LITERATURE

A. The Contractor shall prepare and submit to the Engineers, seven (7) copies of detailed drawings indicating his proposed Automatic Sprinkler System. These drawings shall indicate minimally the following components when they are used in the system.

(1) Name and address of Owner, Architect and Engineers.
(2) Make and type of sprinkler heads (Catalog cuts).
(3) Make and type of fire department connection (Catalog cuts).
(4) Make and type of post indicator valve (Catalog cuts).
(5) Make and type of detector check valve (Catalog cuts).
(6) Make and type of electric alarm bell (Catalog cuts).
(7) Make and type of retard chamber (Catalog cuts).
(8) Make and type of dry pipe alarm valve (Catalog cuts).
(9) Make and type of flanged check valve (Catalog cuts).
(10) Make and type of flanged gate valve (Catalog cuts).
(11) Make and type of automatic drains (Catalog cuts).
(12) Make and type of pipe hangers (1 catalog cut of each make and/or type).

(13) Make, type and electrical characteristics of:

a. The pressure sensing switch*.
b. The post indicator supervisory switch*.
c. The main gate valve supervisory switch*.
d. The flow switch*.
e. Air compressor.

(14) Make and type of fire pump (Catalog cuts).
(15) Make and type of jockey pump (Catalog cuts).
(16) Make and type of supervised O.S & Y valve.
(17) Make and type of indicating butterfly valve.
(18) Make and type of fire hose cabinets.
(19) Make and type of reduced pressure backflow preventer.

Note: All layouts and drawings are to be closely coordinated with the work of all other trades. The Engineers will, upon request, provide a complete set of Architectural, Structural, Mechanical and Electrical Plans and Specifications to aid the Contractor in this work.

*SPECIAL NOTE: 1) The items (indicated by asterisk) must be clearly coordinated with the Fire Alarm System supplier. 2) Supervisory switches located in wet locations (i.e., fire protection vault) shall be provided with NEMA 6 enclosures.

(20) On a set of drawings to the same scale as the drawings accompanying these specifications, indicate:

a. Each head location coordinated with lights, diffusers and other ceiling mounted device.
b. Location of all risers, mains, runout lines, etc.
c. Size of all risers, mains, runout lines, etc.
d. Location and type of pipe hangers.
e. All other information required by the Kentucky Department of Housing, Buildings and Construction.

The Contractor shall submit these drawings to the Engineer through the General Contractor/Construction Manager and Architect where applicable. The Contractor shall submit reviewed drawings to the Kentucky Department of Housing, Buildings and Construction for their review and approval. No work shall be done until drawings are approved by the Kentucky Department of HBC.

5. SYSTEM DRAINAGE

A. The entire Standpipe and Sprinkler System (except that part which is below grade and will not freeze) shall be installed so as to allow 100% drainage.

B. All sprinkler branch piping shall be installed so as to drain back to the main riser.

C. Approved 2" drawoff piping shall be provided on sprinkler risers with discharge piping running to nearest floor drain or open air.

D. Where sprinkler piping is trapped, an approved auxiliary draw-off shall be provided and neatly installed.

E. All draw-offs shall have a metal tag labeled "Sprinkler Drain."

6. INSPECTIONS AND TESTS

A. Furnish all labor, equipment and conduct all required tests in the presence of the Owner and Engineer or designated representative.

B. All piping and devices comprising the fire protection system shall be tested under hydrostatic pressure of not less than 200 PSI and maintained for not less than two (2) hours.

C. Upon completion of his work, the Contractor shall submit a written and signed certificate to the Engineers indicating that he performed the above prescribed tests and rectified all malfunctions arising there from.

7. PERMITS

A. The Contractor shall obtain and pay for all necessary state, municipal, county, city and other permits and fees and pay all State taxes which are applicable.

8. GUARANTEE

A. All workmanship, equipment and material shall be guaranteed in writing against defects from any cause, other than misuse, for a period of one year after date of final acceptance.

9. ACCEPTANCE CERTIFICATE

A. Upon completion, the Contractor shall submit to the Engineers, a properly filled out "Sprinkler Contractor's Certificate Covering Materials and Tests." (4 copies).

10. CLEANING

A. Upon completion of this work all debris, material, and equipment shall be removed from the building and premises; all piping shall be cleaned ready for finish painting. Note: Do not remove rust inhibitive primer specified hereinafter.

11. PAINTING

A. All fire protection piping, fittings, etc., shall have one factory or shop coat of rust inhibitive primer. The Contractor shall thoroughly clean all such items in areas where the piping will be exposed so as to readily receive the finish coat specified in the Architectural Division of Painting. Colors shall be as specified in Identification Section of these specifications.

12. PIPE LAYING

A. Bell holes shall be excavated accurately to size and barrel of pipe shall bear firmly on bottom of trench throughout its length. All foreign matter and dirt shall be removed from the inside of the pipe before it is lowered into its position in the trench, and it shall be kept clean by approved means during and after laying. At times when pipe laying is not in progress, the open ends of pipe shall be closed by approved means, and no trench water shall be permitted to enter the pipe. Cutting of pipe, where necessary, shall be done in a neat and workmanlike manner, without damage to pipe. Refer also to Excavation.

13. EQUIPMENT AND MATERIALS

A. Signs

Appropriate code approved and required signs shall be installed on all control valves, drains, inspector's test, etc., indicating the function, installation, etc. Signs shall be neatly affixed with rust inhibitive screws, rivets or where hung from piping; with stainless steel No. 14 AWG wire.

B. Finish

All exposed materials such as valves, fire department connections, sprinkler heads, fire pump test headers, etc., shall be brass or chrome-plated brass.

C. Check Valves

(1) 2-1/2" and over; listed and approved by UL and FM; marked SV-FM; 175# working pressure; 1 BBM; flanged; equivalent to Mueller, Scott or Lunkenheimer.

(2) 2" and under; 150# working pressure; bronze; screwed; equivalent to Jenkins, Scott or Lunkenheimer.

D. Pipe & Fittings

(1) Nipples and fittings shall be of same material, composition, and weight classification as pipe in which installed.

(2) Up to 2" (Interior) Schedule 40 ASTM A-53 black steel; 125# cast iron screwed fittings or Schedule 10, ASTM A-135 black steel with victaulic or similar type approved fittings.

(3) 2-1/2" and larger (Interior) Schedule 40 black steel with flanged, welded or victaulic (or similar) type approved fittings or Schedule 10, ASTM A-135 black steel with victaulic or similar type approved fittings.

(4) Exterior: Class 200 PVC piping for exterior fire protection piping. Piping shall meet AWWA C900 requirements, be UL listed, Factory Mutual approved and NSF approved. Joints shall have spigot pipe ends with a flexible elastomeric ring seated in a groove to provide water tight seal. Minimum burst pressure to be 900 psi when tested in accordance with ASTM D1599. No. 8 copper wire (tracer wire) shall parallel all exterior PVC pipe.

E. Clamps and Anchors

(1) Furnish and install approved clamps, as required, at all (45 degree) l/8 bends, (90 degree) 1/4 bends and flange and spigot pieces to the straight pipe to ensure permanent anchorage of all fire lines. Clamps, clamp rods, nuts, washers, and glands shall be coated with a quick drying coal tar bituminous paint after installation.

F. Hangers

(1) All piping shall be adequately and permanently supported in an approved manner on approved hangers (Submit with drawings).

G. Sleeves and Escutcheon Plates

(1) Furnish and install sleeves for pipes where piping penetrates masonry walls; exterior wall sleeves to be watertight. Fire and smoke stop all penetrations through fire and smoke walls and coordinate with General Contractor for locations.

(2) Furnish and install cast brass chrome plated split ring type escutcheons where piping penetrates walls, ceilings and floors, whether in finished areas or not.

H. Electric Wiring

(1) All electric wiring for the system which may be required shall be installed in accordance with the National Board of Fire Underwriters, and National Electric Code. The cost of this electric wiring shall be included under this Contract. All electrical wiring and conduit installed in fire protection pits shall be sealed watertight.

I. Inspection Test Connections & Pressure Gauges

(1) A 1" inspection test connection as required by the Kentucky Building Code. Per University of Kentucky standards, provide a test station at the furthest point on each zone. Plumb all test station discharge to nearest drain / floor drain.

(2) Control valve for test connection shall be installed not over 7' above the floor.

(3) A pressure gauge at the inspection. Test connection at each location indicated on the Plans. Pressure gauges shall be 2-1/2" diameter and readable from the floor.

J. Gate Valves

(1) 2-1/2" and over; listed and approved by UL and FM; marked SV-FM; 175# working pressure; 1 BBM; OS&Y; flanged; cast iron discs; bronze seat rings; four-point wedging mechanism; equivalent to Mueller, Scott or Lunkenheimer.

(2) 2" and under; 150# working pressure; bronze; rising stem; screwed; bronze discs; bronze seat rings; two-point wedging mechanism; equivalent to Jenkins, Scott or Lunkenheimer.

K. Sprinkler Head Cabinet

(1) Furnish and install a cabinet, clearly labeled, with four (4) sprinklers of each type complete with required wrenches. Locate as directed by Engineer. Label "Sprinkler Heads."

L. Fire Department Connection

(1) Furnish and install a fire department connection with threads as approved by the local fire department; cast brass polished and chromium plated; with connection sizes and lettering as directed by the local authority having jurisdiction; Units shall be Acron Brass or equal single 4" nozzle, clapper, etc. Per University standards, fire department connection to be painted.

M. Fire Valve Cabinets

(1) Manufacturer. The products specified hereunder shall be Crocker or equivalent by Larsen's Mfg. Co., J.L. Industries, Kidde, or other nationally recognized manufacturer of cabinets conforming closely to specification requirements.

(2) Valve cabinets for recessed installation at all locations where shown shall be similar to Crocker Model No. 2700 with flat trim and clear glazed full glass door. Provide 18-gauge steel tub, 20-gauge steel door, 16-gauge steel frame, and white enamel finish interior with all exposed exterior portions painted with color selected by Architect.

(3) Each cabinet shall be equipped with one 2-1/2" (or as required by the local authority) Fire Department valve with cap and chain. All connections and threads shall be as required by the local authority.

N. Fire Hose Valve

(1) Manufacturer. The products specified hereunder shall be Crocker or equivalent by Elkhart, Central Sprinkler, Kidde, or other nationally recognized manufacturer of hose valves conforming closely to specification requirements. Valve shall be with cap and chain. All connections shall be 2½" or as required by the local authority.

O. Siamese Hose Connection

(1) Furnish and install on the fire protection pit where required by the local authority a siamese hose connections with threads as approved by the local Fire Department. Unit shall be similar to Larsen's No. 15 sidewalk siamese, size: 2-1/2" x 2-1/2" x 6". Coordinate threads type with local Fire Department.

P. Post Indicator Valve

(1) Furnish and install a post indicator valve as required by the local authority. It shall be listed and approved by Underwriters Laboratories and Associated Factory Mutual Laboratories; Marked SV-FM; vertical; non-adjustable; with electric supervisory switch, handle, view window, brass padlock with (2) keys; gate valve to meet gate valve specifications, except to have non-rising stem and mechanical joint ends; equivalent to Mueller, Scott or Lunkenheimer. Per University standards, post indicator valve to be painted.

Q. Detector Check Valve

(1) Furnish and install detector check valve as required by the local authority. It shall be listed and approved by Underwriter Laboratories and Associated Factory Mutual Laboratories; 175# working pressure; IBBM; flanged; with tapped bosses each side for by-pass meter trimming; equivalent to Viking, Badger or Grinnell.

(2) The Contractor shall contact the servicing water company and ascertain their policy pertaining to the by-pass water meter; if not furnished by water company. The Contractor shall furnish and install the by-pass meter and trimming as detailed on the drawings.

R. Sprinkler Heads

Gem, Grinnell, Star, Viking, Reliable, Central or approved equivalent as follows:

(1) Where piping is exposed: "Standard up right."

(2) Where piping is concealed above finished ceilings, provide two pieces, semi recessed, white plated sprinkler heads with removable escutcheon.

(3) Install sprinkler head guards where heads are subject to physical abuse. Heads located below seven (7) feet above floor, etc.

(4) Sprinkler head degree ratings shall be determined by the area serviced in accord with current Codes and Standard Practices. Indicate degree ratings on submitted Shop Drawings.

(5) The Contractor shall submit to the Engineer for inspection, one (1) sample of each type of sprinkler head, proposed to be used on the project.

(6) Where heads are installed in a tile ceiling, they shall be installed in the middle of the tiles, at half or quarter points along the length of the tiles. Install sprinkler heads at quarter points of center scoured 2' X 4' ceiling tiles.

(7) Provide high temperature heads around range hoods, kitchen equipment, kilns, boilers, water heaters and other heat producing equipment.

(8) Per University standards, provide guards where sprinkler heads are to be located in mechanical spaces, in work shops, in athletic spaces, below eight (8) ft AFF or any other location in which heads may be subject to damage. If in doubt, consult with engineer.

(9) Install quick response heads.

(10) Per University standards, automatic reset or self-closing sprinkler heads are prohibited.

(11) Per University standards, concealed sprinkler heads are prohibited.

S. Water Motor Gong

(1) Furnish and install a water motor gong on the building exterior.

Grinnell, Viking, Mueller or equivalent.

(2) Per University standards, provide a permanent emergency telephone number label near the external alarm.

T. Retard Chamber

(1) Same as water motor gong.

U. Flow Indicator Switches

(1) Furnish and install flow indicator switches as required by NFPA 13. All flow indicator switches shall be UL approved. Coordinate with Fire Alarm System supplier/installer. Provide a set of dry contacts on each flow switch for interface to the Control System if this control point is specified in the Controls Section.

V. Tamper Switches for Water Shut-Off Valves

(1) Furnish and install tamper switches where required by NFPA 13. All tamper switches shall be UL approved. Coordinate with fire alarm system supplier/installer. All tamper switches located in fire protection pits shall be waterproof, capable of operating beneath water similar to Potter PTS Series and be NFPA approved.

W. Fire Hydrant

(1) Furnish and install fire hydrants as approved by local Fire Department.

(2) Per University standards, fire hydrants to be painted red, located away from the building near a hard surface for access and clearly labeled as to the building served with a permanent sign attached to the collar with 1” or larger letters.

X. Reduced Pressure Backflow Preventer

Y. Refer to plumbing specialties section of these specifications.

Z. Fire Pump

(1) Preliminary flow test suggest a fire pump will be required. An additional flow test has been requested.

END OF SECTION 21 0100

SECTION 22 0100 - PLUMBING SPECIALTIES

1. GENERAL

   A. The Contractor's attention is directed to the General and Special Conditions, General Conditions-Mechanical and to all other Contract Documents as they apply to this branch of the work. Attention is also directed to all other sections of the Contract Documents which affect the work specified in this section.

   B. The Contractor shall provide all equipment and specialties complete with trim required and connect in a manner conforming to the Kentucky Building Code.

   C. The Contractor shall obtain exact centerline rough-in dimensions between partitions, walls, etc. as required for lay-out of his rough-in work. All work shall be roughed-in so that all exposed piping will be straight and true without bends or offsets.

   D. Prior to final inspection, test by operation at least twice, all equipment.

   E. Prior to final inspection, remove all stick-on labels, dirt, grease, other removable stampings, lettering, etc. from equipment and specialties and thoroughly clean same.

   F. All equipment and specialties shall be installed as recommended by the manufacturer in a neat and workmanlike manner. Unacceptable workmanship shall be removed and replaced at the installing Contractor's cost.

   G. All pipes, valves, fittings, fixtures, etc. for use in potable water systems 2” and below shall comply with federal lead-free requirements that the lead content of wetted surfaces cannot exceed 0.25% by weight.

2. DRAINAGE SPECIALTIES

   A. GENERAL

      (1) Provide all drainage specialties indicated, specified and/or required to provide complete and acceptable removal of all storm, sanitary, waste, laboratory waste, etc. from the building and into approved receptors.

      (2) Drainage specialties shall be on non-electrolytic conduction to the material to which they are connected.

      (3) Drainage specialties shall be installed in a manner so as to ensure no leakage of toxic or odorous gases or liquids and shall have traps and/or backflow preventers where required. Nor shall they allow backflow into other or existing systems.

   B. CLEANOUTS - INTERIOR (CO)

      (1) In addition to cleanouts indicated, provide cleanouts in soil and waste piping and storm drainage at the following minimum locations:

         a. At base of each stack.
         b. At fifty (50) foot maximum intervals in horizontal lines.
         c. At each change of direction of a horizontal line.
         d. As required by current KBC.

e. As required to permit rodding of entire system. (If in doubt, contact Engineers.)

(2) Water closets, slop sinks and other fixtures with fixed traps shall not be accepted as cleanouts.

(3) Cleanouts and/or test tees concealed in inaccessible pipe spaces, walls and other locations shall have an eight (8) inch by eight (8) inch (minimum) access panel or cover plates shall be set flush with finished floors and walls and shall be key or screw driver operable.

(4) Access panels for cleanouts shall be of the Zurn, 1460 series or equivalent by Josam or Watts. They may, at the Contractor's option, be Perma-Coated steel, prepared to receive finish. The Contractor shall coordinate the finish of all access panels installed in finished areas with Architect.

(5) Cleanouts and access panels shall be sized so as to permit the entry of a full sized rodding head capable of one hundred percent circumferential coverage of the line served.

(6) Provide a non-hardening mixture of graphite and grease on threads of all screwed cleanouts during installation.

(7) Do not install cleanouts against walls, partitions, etc. where rodding will be difficult or impossible. Extend past the obstruction.

(8) In finished walls, floors, etc., ensure that cleanouts are installed flush with finished surfaces and, where required, grout or otherwise finish in a neat and workmanlike manner.

(9) Cleanouts shall be as manufactured by Zurn, Josam, Jay R. Smith, Watts, MIFAB, Ancon or equivalent, similar to the following:

a. Zurn, Z-1440 cleanouts or Z-1445 cleanout tee at base of exposed stack and at change in direction of exposed lines.

b. Zurn, Z-1440 cleanout or Z-1445-1 cleanout tee where stacks are concealed in finished walls

c. Zurn, ZN-1400-T cleanout with square scoriated top in finished concrete and masonry tile floors.

d. Zurn, ZN-1400-Tx cleanout with square recessed top for tile in vinyl and linoleum finished floors.

e. Zurn, ZN-1400-Z cleanout with round recessed top for terrazzo floors.

f. Zurn, Z-1400-HD cleanout with tractor cover for exterior locations. Provide concrete supporting pad crowned to shed water. Refer to drawings for pad size.

g. Mueller, No. D-731 or D-714, Nibco, Flage or equivalent for cleanouts in copper waste with cover plates and/or access panels listed for other cleanouts.

h. Threaded hex head type cleanouts of same materials as pipe for piping 2" and smaller.

i. Zurn, cleanout with round top with adjustable retainer for carpet area. Install flush with carpet.

C. FLOOR DRAINS

(1) Provide floor drains at locations indicated and/or as required by Kentucky Building Code. Install in a neat and workmanlike manner. Coordinate locations with appropriate persons or party to ensure floor pitch to drain where required.

(2) Install floor drains in strict accordance with manufacturer's recommendations and the KBC unless otherwise indicated.

(3) Each floor drain located on floors above the lowest floor shall be provided complete with a three (3) foot by three (3) foot, four (4) pound sheet lead flashing and clamping collar or chlorinated polyethylene shower pan liner of 30 mil. Lead pans shall be given a heavy coat of asphaltum on bottom and sides before installation and a heavy coat on exposed surfaces (if any). After installation, provide one ply of fifteen (15) pound roofing felt beneath each pan.

(4) Ensure by coordination with the appropriate persons or party that spaces served by a floor drain(s) has a water seal extending at least three (3) inches from the floor of the space served on all floors above the lowest level.

(5) The floor drains shall be Zurn, Josam, Watts, Jay R. Smith, MIFAB, Sioux Chief or equivalent, similar to the following:

a. FD-1 - Zurn, Z-415 with 6" X 6" top, Type "S" strainer. Provide with trap primer connection.

b. FD-2 - Zurn, ZN-610 with 12" X 12" locking grate, secondary strainer, sediment bucket, and galvanized cast iron construction with trap primer connection.

c. FD-3 – Zurn, Z415 with Type “E” strainer with 4” diameter funnel. Provide with trap primer connection.

D. TRAP PRIMERS

Provide trap primers for all floor drains and open receptacle. Acceptable Trap Primer Manufacturers included Zurn, Precision Plumbing Products and Sioux Chief. Trap Primer selection shall be as follows:

(1) Trap Primer Type-1 (TP-1)

Precisions Plumbing Products Prime-Time or equal electronic trap priming manifold, with atmospheric vacuum breaker, pre-set 24-hour clock, manual override switch, 120-volt solenoid valve with 120v/3wire connection. Provide in 12” x 12” x 4” surface mounted metal cabinet. Provide with 10-opening manifold, un-used manifold opening shall be capped. Install united as required by manufacturer.

(2) Trap Primer Type-2 (TP-2)

Precision plumbing products Prime-Rite or equal trap primer shall be installed on a cold-water line, with distribution unit(s) to serve 1 to 8 drains. Install per manufacturer’s recommendations.

(3) Trap Primer Type-3 (TP-3)

Zurn Z-1022 or equal trap primer shall be installed in cold water supply line of nearest plumbing fixture. One trap primer per floor drain, one trap primer per fixture. Pipe to waste inlet per manufacturer's recommendations.

E. CLEANOUTS (EXTERIOR) (ECO)

Provide exterior cleanouts at each location indicated and in the manner indicated. Permanently set all exterior cleanouts centered in a 30" X 30" X 6" deep concrete pad. The top of the concrete pad shall be flush with finished grade. The top of the cleanout box shall be flush with the top of the pad and shall be stamped "CO."

F. ROOF DRAINS

(1) Each drain shall be provided complete with a three (3) foot by three (3) foot, four (4) pound sheet lead flashing and clamping collar. Roof drains shall be installed in strict accordance with the drain manufacturers and roofing manufacturer's instructions. Provide all accessories required for a complete installation.

(2) RD-1, Zurn, Z-100 15", or equivalent, diameter roof drain, dura-coated cast iron body with combination membrane flashing clamp/gravel guard and low silhouette cast iron dome. Provide with any accessories needed for installation in roof specified by Architect and as recommended by the roofing manufacturer.

(3) RD-2 (Overflow Roof Drain with external water dam) Zurn, Z-100-89, or equivalent, 15" diameter roof drain, dura-coated cast iron body with 2" high combination membrane flashing clamp/gravel guard and low silhouette cast iron dome. Provide with any accessories for installation in roof specified by the Architect and as recommended by the roofing manufacturer.

G. HEADWALLS (HW)

Provide at the locations indicated and/or as required by Federal, State and/or local codes, rules, regulations, standards and/or requirements, headwalls of the type required or indicated. Install as prescribed by local authority or as indicated, whichever is superior.

H. VARMINT GUARDS

Provide at each live discharge and/or culvert discharge (where culvert exceeds 30 linear feet in length) and where the line has a surface opening greater than one-half (2) square feet, a three (3) inch mesh steel varmint guard made up with frame and 3/8-inch minimum steel rods welded together and affixed tightly into the end of the open pipe.

3. WATER SUPPLY SPECIALTIES

A. GENERAL

(1) Provide all water supply specialties indicated, specified and/or required for the complete installation. Install in a neat and workmanlike manner in accordance with the manufacturer's recommendations and the KBC.

(2) Where required by the KBC, install code approved vacuum breakers in each water supply specialty.

B. FREEZEPROOF WALL HYDRANTS (FPWH)

(1) Provide code approved wall hydrants at each location indicated in a neat and workmanlike manner. Affix tight to walls and ensure that the feed piping is on the heated side of the building insulation blanket.

(2) Where hydrants are of handwheel type, remove handwheels and turn over to owners in an envelope labeled "Wall Hydrants" exterior upon completion of the project.

(3) Where hydrants have key operators, turn over at least two (2) keys in an envelope labeled "Wall Hydrants" to owners upon completion of the project.

(4) Where hydrants have lockable boxes, turn over at least two (2) keys in an envelope labeled "Wall Hydrants, Exterior" to owners upon completion of project.

(5) Mount all wall hydrants at least twenty (20) inches above finished exterior grade. Where this is not possible or practical, contact Engineers.

(6) Wall hydrants shall be as follows or equivalent:

a. Zurn 1300 or equivalent, 3/4", encased, flush, non-freeze wall hydrant with key lock and combination backflow preventer/vacuum breaker.

C. HOSE BIBBS (HB)

(1) Provide code approved hose bibbs with vacuum breakers and male threaded spouts at each location indicated and as follows:

(2) Do not install hose bibbs spaces which do not have existing planned or installed floor drains even if sill cocks are indicated for these areas.

(3) Hose bibbs shall be mounted at eighteen (18) inches above finished floor served.

(4) The hose bibb shall be Zurn or equivalent similar to the following:

a. Zurn Z1350-VB Model. Encased moderate climate wall hydrant for narrow wall installation. Complete with bronze body, all bronze interior parts, replaceable seat washer, screwdriver operated stop valve in supply, key operated control valve, and ¾ [19] IP female inlet and ¾ [19] male hose connection standard. Adjustable stainless-steel box furnished with hinged cover, cylinder lock and “WATER” stamped on cover. Provide with 3/4 adapter vacuum breaker.

D. BOILER DRAINS (BD)

Install 3/4-inch bronze body boiler drains, similar and equivalent to Nibco, No. 72 or 73, as indicated and at the following locations:

(1) At the low point of the plumbing system.

(2) On boiler low point.

(3) In each hot water heater and/or storage tank.

(4) At the low point of each hydronic system.

(5) On the water refrigeration machine (100 percent drainage).

(6) On each water storage tank.

(7) At each pump suction.

(8) At the low point of each isolatable section of any system carrying water.

NOTE: Install a code approved vacuum breaker where installation on to domestic water system.

E. WATER HAMMER ARRESTORS (WHA): Provide water hammer arrestors at each location indicated and/or as required to eliminate hydrostatic on the domestic water system. Provide at least one water hammer arrestor at all quick acting valve locations including:

Automatic Clothes Washers – Type “A”
Commercial Dishwashers – Type “B”
Sterilizers – Type “B”
Mop Basins (downstream of check valve) – Type “A”
Flush valve fixtures - Type “B” (Each toilet room with 1-3 flush valve fixtures shall have its own Type “B” water hammer arrestor.)

(1) Multiple Fixtures – Branch Line Less Than 20’ Long: The preferred location for a Zurn Shoktrol is at the end of the branch line between the last two fixtures when the branch lines do not exceed 20’ in length, from the start of the horizontal branch line to the last fixture supply on this line.

(2) Multiple Fixtures – Branch Line More Than 20’ Long: On branch lines over 20’ in length, use two Shoktrols whose capacities total the requirement of the branch. Locate one unit between the last and next to last fixture and the other unit approximately midway between the fixtures.

(3) Water hammer arrestors shall be Zurn, Z-1700, Shoktrol, Smith, Josam, Wade, or equivalent. Water hammer arrestors shall be stainless steel, bellows type. Field fabricated capped cylinders shall not be acceptable.

(4) Note: Provide insulation unions where arrestors are of dissimilar material from the piping served (unless piping is non-conducting, such as ABS or PVC).

MARK	MANUFACTURER & MODEL	SIZE	P.D.I. SIZE
TYPE "A"	ZURN, Z-1700 # 100	1-11	A
TYPE "B"	ZURN, Z-1700 # 200	12-32	B
TYPE "C"	ZURN, Z-1700 # 300	33-60	C
TYPE "D"	ZURN, Z-1700 # 400	61-113	D

F. PRESSURE REDUCING VALVES (PRV)

Install at each location indicated and/or as required to reduce domestic building water service to a maximum of eighty (80) PSIG code approved pressure reducing stations with by-pass. Install in a

manner indicated or as required. Provide unions and stops for removal of station. PRV shall be adjustable from thirty (30) percent above or below reduced pressure. Where this cannot be attained with single stage, provide multi-staged reduction.

G. REDUCED PRESSURE BACKFLOW PREVENTERS (RPBP)

Watts #909 or equivalent reduced pressure backflow preventer. Provide with gate valves for isolation, FDA food grade strainer and air gap fitting. RPBP shall be UL listed.

H. DOUBLE CHECK VALVE ASSEMBLY

Watts #709, Watts #757, or equivalent double check valve assembly. Provide with FDA approved food grade strainer and gate valves for isolation. Assembly shall be UL listed.

4. GENERAL SPECIALTIES

A. VACUUM BREAKERS AND BACK FLOW PREVENTERS

Where required by the KBC, whether indicated or not, provide approved vacuum breakers or backflow preventers at the following locations.

(1) Where domestic water system connects to fire protection system.

(2) Where domestic water system connects to hydronic system.

(3) At any hose (threaded) tap on the domestic water system.

B. ROOF FLASHINGS

All plumbing vents or other plumbing passing thru the roof shall be flashed as approved by the KBC and as recommended by the roofing manufacturer and/or Contractor.

C. GAS PRESSURE REGULATORS

Provide gas pressure regulators for all gas fired equipment that requires a lower pressure than what is delivered to the appliance. Regulators shall be installed in accordance with the requirements of NFPA 54 and/or International Fuel Gas Code, whichever is more stringent.

END OF SECTION 22 0100

SECTION 22 0200 - PLUMBING FIXTURES, FITTINGS AND TRIM

GENERAL

A. The Contractor's attention is directed to the General and Special Conditions, General Conditions-Mechanical and to all other Contract Documents as they apply to this branch of the work. Attention is also directed to all other sections of the Contract Documents which affect the work of this section and which are hereby made a part of the work specified in this section.

B. The Contractor shall provide all fixtures complete with trim required and connect in a manner conforming to the State Plumbing Code.

C. The Contractor shall obtain exact centerline rough-in dimensions between partitions, walls, etc. as required for lay-out of his rough-in work. All work shall be roughed-in so that all exposed piping will be straight and true without bends or offsets.

D. All exposed piping or in casework below sinks, stops, traps, tailpieces, etc., shall be code approved chrome plated brass unless otherwise indicated or specified. Water supplies shall connect through walls with stops and chrome plated escutcheons with set screws.

E. All fittings, fixtures and trim shall be new unless otherwise indicated or specified. They shall also be of equivalent quality, dimensions, material, etc. as those specified. All faucets, shower heads, drains, levers, trim, etc. shall be constructed of metal and not plastic.

F. Handicapped fixtures shall be mounted as recommended by the KBC and ADA.

G. All fixtures shall be mounted as recommended by the manufacturer. Fixtures shall be rigidly mounted to walls and floors. Pay particular attention to flush valves and bracket concealed portion to building structure during rough-in. Loose, shaky flush valves, lavatories, etc. shall not be acceptable.

H. Prior to final inspection open all faucets and allow to run for fifteen (15) minutes, then remove all faucet aerators and thoroughly clean until smooth flow is obtained.

I. Prior to final inspection, test by operation at least twice:

(1) (Where applicable) adequate flow of hot and/or cold water at;

a. All Faucets
b. Flush Valves and Tanks
c. Tub Drains
d. Hose Bibbs
e. Sill Cocks
f. All Other Valved Hot and/or Cold-Water Openings in the Plumbing System

(2) All toilet seats

(3) All flush tank overflows

J. Prior to final inspection, remove all stick-on labels, dirt, grease, other removable stampings, lettering, etc. from plumbing fixtures and thoroughly clean same.

K. All sink and lavatory traps shall have screw in plugs in the bottom for ease of cleaning and have mechanical fittings for ease of removal.

L. All fixtures shall be set level and true and shall be grouted into finished walls, floors, etc. in a neat and workmanlike manner with an approved waterproof non-yellowing grout for such service.

M. Special Note for Handicap Grab Rails: Coordinate top of shower valves, flush valves, flush tank, etc., with location of grab rails as shown on the architectural plans. The Contractor shall install all items to allow for installation, removal and service without removal of the grab bar.

N. All exposed drain pipes and domestic water piping under handicap accessible sinks and lavatories shall be insulated in accordance with ADA requirements and shall have a vinyl plastic covering over all insulation.

O. The Contractor shall obtain a copy of the casework shop drawings and confirm sinks, faucets, gas turrets, etc., will fit in the space provided. Additionally, in ADA applications with handicap sink base cabinets, the Contractor shall limit the total distance from the bottom of the sink to the bottom of the P-trap and coordinate waste pipe rough-in height to ensure the proper installation of the handicap sink base cabinet front closure panel. The Contractor shall not order sinks until he confirms no conflicts occur and shall adjust sink sizes if required. If the Contractor orders sinks, faucets, etc., that do not fit in the casework supplied, he shall replace them at no additional cost.

P. All lavatories, sinks, etc. shall be supplied with center rear drain outlets where necessary to avoid conflict with casework, handicapped kneeboards, etc. If the Contractor orders sinks that do not fit in the casework supplied, he shall replace them at no additional cost.

Q. All single supply faucets shall be provided with mechanical mixing valves unless otherwise noted. Mechanical mixing valves shall have hot and cold-water inlet connections, common outlet, in-line check valves, and adjustable temperature setting. Mixing valves shall be Moen model 104424 or equal. Provide one mixing valve per single supply faucet unless otherwise noted. Contractor shall provide all required connections and set mixing valve to required temperature.

R. All gooseneck faucets shall have rigid spouts, unless swing spouts are specified. If swing spouts are specified, the spout shall have a maximum swing of 140 degrees from side to side.

S. All plumbing fixtures shall comply with federal lead-free requirements that the lead content of wetted surfaces cannot exceed 0.25% by weight.

T. All water closet handles on ADA water closets shall be located on the approach side of the fixture.

2. FIXTURES AND TRIM

Available Manufacturers: Subject to compliance with requirements of manufacturers offering plumbing fixtures and trim. Plumbing fixtures and trim, which may be incorporated in the work include, but are not limited to, the following:

A. Plumbing Fixtures - Water Closet, Lavatory, Urinal, Bathtubs, Clinical Sink and Scrub Sink

American Standard, U.S. Plumbing Products
Eljer Plumbingware Div., Wallace-Murray Corp.
Kohler Co.
Crane Plumbing
Universal-Rundle

Toto
Zurn Co.
Sloan Fixtures

B. Plumbing Trim

American Standard, U.S. Plumbing Products
Chicago Faucet Co.
Kohler Co.
Delta Co.
T&S Brass & Bronze Work Co. (Commercial)
Zurn Co.
Just Co.
Speakman Co.
Moen Commercial

C. Flush Valves

Delany Co.
Sloan Valve Co.
Zurn Co.
American Standard

D. Fixture Seats

Bemis Mfg. Co.
Church Seat Co.
Olsonite Corp., Olsonite Seats

E. Water Coolers

Elkay Mfg. Co.
Halsey Taylor Div., King-Sealey Thermos Co.
Haws Drinking Faucet Co.
Western Drinking Fountains, Div. of Sunroc Corp.
Oasis Co.
Acorn AQUA

F. Service Sinks and Mop Basins

American Standard, U.S. Plumbing Products
Eljer Plumbingware Div., Wallace-Murray Corp.
Fiat Products
Kohler Co.
Stern-Williams Co., Inc.
Florestone

G. Stainless Steel Sink

Elkay Mfg. Co.
Just Mfg. Co.
Moen, Div. of Stanadyne/Western
Sterling Co.

H. Fixture Carriers

Josam Mfg. Co.
Jay R. Smith
Tyler Pipe
Zurn Industries
Watts

I. Washer/Dryer Connection Box

Guy Gray Co.
Wolverine Brass, Inc.

J. P-Trap Insulation Kit (Trap Wrap)

Truebro
Brocar
Plumberex

Note: Kitchen, Lab, Science Room Fixtures, Special Equipment, Etc.

Contractor to provide final plumbing connections to all of the equipment furnished by Owner including, but not limited to: chrome supplies, stops, continuous drains, drain tailpiece, Kentucky Code "P" traps and escutcheons.

3. FIXTURE SELECTION

A. Refer to drawings for fixture schedule.

END OF SECTION 22 0200

SECTION 22 0300 - PLUMBING EQUIPMENT

1. GENERAL

   A. All plumbing equipment shall comply with the latest provisions of KBC.

   B. Provide magnesium anodes for water heaters and storage tanks.

2. RECIRCULATING DOMESTIC HOT WATER PUMPS

   A. Thrush, Armstrong, Bell and Gossett or approved equivalent all bronze in-line centrifugal circulating pump with mechanical seals, drip proof motor and all required overloads, starters and disconnects.

END OF SECTION 22 0300

SECTION 221313 - FACILITY SANITARY SEWERS

PART 1 - GENERAL

1.1 RELATED DOCUMENTS

A. Drawings and general provisions of the Contract, including General and Supplementary Conditions and Division 1 Specification Sections, apply to this Section.

1.2 SUMMARY

A. This Section includes sanitary sewerage outside the building.

1.3 PERFORMANCE REQUIREMENTS

A. Gravity-Flow, Nonpressure-Piping Pressure Ratings: At least equal to system test pressure.

1.4 SUBMITTALS

A. Field quality-control test reports.

1.5 DELIVERY, STORAGE, AND HANDLING

A. Do not store plastic structures, pipe, and fittings in direct sunlight.

B. Protect pipe, pipe fittings, and seals from dirt and damage.

1.6 PROJECT CONDITIONS

A. Site Information: Field verify existing utility locations.

B. Existing Utilities: Do not interrupt utilities serving facilities occupied by Owner or others unless permitted under the following conditions and then only after arranging to provide temporary utility services according to requirements indicated:

1. Notify Architect not less than two days in advance of proposed utility interruptions.
2. Do not proceed with utility interruptions without Architect's written permission.

PART 2 - PRODUCTS

2.1 PIPING MATERIALS

A. Refer to Part 3 "Piping Applications" Article for applications of pipe and fitting materials.

2.2 DUCTILE-IRON, GRAVITY SEWER PIPE AND FITTINGS

A. Pipe: ASTM A 746, for push-on joints.

B. Standard Fittings: AWWA C110, ductile or gray iron, for push-on joints.

C. Compact Fittings: AWWA C153, for push-on joints.

D. Gaskets: AWWA C111, rubber.

2.3 SPECIAL PIPE FITTINGS

A. Ductile-Iron, Flexible Expansion Joints: Compound fitting with combination of flanged and mechanical-joint ends complying with AWWA C110 or AWWA C153. Include 2 gasketed ball-joint sections and 1 or more gasketed sleeve sections, rated for 250-psig minimum working pressure and for offset and expansion indicated.

1. Available Manufacturers:

a. EBAA Iron Sales, Inc.
b. Romac Industries, Inc.
c. Star Pipe Products.

B. Ductile-Iron Deflection Fittings: Compound coupling fitting with ball joint, flexing section, gaskets, and restrained-joint ends complying with AWWA C110 or AWWA C153. Include rating for 250-psig minimum working pressure and for up to 15 degrees of deflection.

1. Available Manufacturers:

a. EBAA Iron Sales, Inc.

C. Ductile-Iron Expansion Joints: Three-piece assembly of telescoping sleeve with gaskets and restrained-type, ductile-iron, bell-and-spigot end sections complying with AWWA C110 or AWWA C153. Include rating for 250-psig minimum working pressure and for expansion indicated.

1. Available Manufacturers:

a. Dresser, Inc.; DMD Div.
b. EBAA Iron Sales, Inc.
c. JCM Industries.
d. Smith-Blair, Inc.

2.4 CLEANOUTS

A. Gray-Iron Cleanouts: ASME A112.36.2M, round, gray-iron housing with clamping device and round, secured, scoriated, gray-iron cover. Include gray-iron ferrule with inside calk or spigot connection and countersunk, tapered-thread, brass closure plug.

1. Available Manufacturers:

a. Josam Company.
b. MIFAB Manufacturing Inc.

c. Smith, Jay R. Mfg. Co.
d. Wade Div.; Tyler Pipe.
e. Watts Industries, Inc.
f. Watts Industries, Inc.; Enpoco, Inc. Div.
g. Zurn Specification Drainage Operation; Zurn Plumbing Products Group.

2. Top-Loading Classification: Heavy duty.
3. Sewer Pipe Fitting and Riser to Cleanout: ASTM A 74, Service class, cast-iron soil pipe and fittings.

2.5 CONCRETE

A. General: Cast-in-place concrete according to ACI 318, ACI 350R, and the following:

1. Cement: ASTM C 150, Type II.
2. Fine Aggregate: ASTM C 33, sand.
3. Coarse Aggregate: ASTM C 33, crushed gravel.
4. Water: Potable.

B. Portland Cement Design Mix: 4000 psi minimum, with 0.45 maximum water-cementitious materials ratio.

1. Reinforcement Fabric: ASTM A 185, steel, welded wire fabric, plain.
2. Reinforcement Bars: ASTM A 615/A 615M, Grade 60, deformed steel.

C. Ballast and Pipe Supports: Portland cement design mix, 3000 psi minimum, with 0.58 maximum water-cementitious materials ratio.

1. Reinforcement Fabric: ASTM A 185, steel, welded wire fabric, plain.
2. Reinforcement Bars: ASTM A 615/A 615M, Grade 60, deformed steel.

PART 3 - EXECUTION

3.1 EARTHWORK

A. Excavating, trenching, and backfilling are specified in Division 31 Section "Earth Moving."

3.2 IDENTIFICATION

A. Materials and their installation are specified in Division 2 Section "Earthwork." Arrange for installing green warning tapes directly over piping and at outside edges of underground structures.

1. Use warning tape or detectable warning tape over ferrous piping.
2. Use detectable warning tape over nonferrous piping and over edges of underground structures.

3.3 PIPING APPLICATIONS

A. General: Include watertight joints.

B. Refer to Part 2 of this Section for detailed specifications for pipe and fitting products listed below. Use pipe, fittings, and joining methods according to applications indicated.

C. Gravity-Flow Piping: Use the following:
   1. Ductile-iron, gravity sewer pipe or ductile-iron pressure pipe; ductile-iron standard or compact fittings; gaskets; and gasketed joints.

3.4 SPECIAL PIPE COUPLING AND FITTING APPLICATIONS

A. Special Pipe Couplings: Use where required to join piping and no other appropriate method is specified. Do not use instead of specified joining methods.

   1. Use the following pipe couplings for nonpressure applications:

      a. Sleeve type to join piping, of same size, or with small difference in OD.
      b. Increaser/reducer-pattern, sleeve type to join piping of different sizes.
      c. Bushing type to join piping of different sizes where annular space between smaller piping's OD and larger piping's ID permits installation.

3.5 INSTALLATION, GENERAL

A. General Locations and Arrangements: Drawing plans and details indicate general location and arrangement of underground sanitary sewerage piping. Location and arrangement of piping layout take design considerations into account. Install piping as indicated, to extent practical.

B. Install piping beginning at low point, true to grades and alignment indicated with unbroken continuity of invert. Place bell ends of piping facing upstream. Install gaskets, seals, sleeves, and couplings according to manufacturer's written instructions for using lubricants, cements, and other installation requirements. Maintain swab or drag in line, and pull past each joint as it is completed.

C. Use proper size increasers, reducers, and couplings where different sizes or materials of pipes and fittings are connected. Reducing size of piping in direction of flow is prohibited.

D. Install gravity-flow piping of sizes and in locations indicated.

   1. Install piping pitched down in direction of flow, at minimum slope of 1 percent, unless otherwise indicated.
   2. Install piping with 36-inch (1000-mm) minimum cover.
   3. Install ductile-iron, gravity sewer piping according to ASTM A 746.
   4. Install ductile-iron and special fittings according to AWWA C600 or AWWA M41.

E. Clear interior of piping and manholes of dirt and superfluous material as work progresses. Maintain swab or drag in piping, and pull past each joint as it is completed. Place plug in end of incomplete piping at end of day and when work stops.

3.6 PIPE JOINT CONSTRUCTION AND INSTALLATION

A. Join gravity-flow, nonpressure, drainage piping according to the following:
   1. Join ductile-iron, gravity sewer piping according to AWWA C600 for push-on joints.
   2. Join ductile-iron and special fittings according to AWWA C600 or AWWA M41.

3.7 CONCRETE PLACEMENT

A. Place cast-in-place concrete according to ACI 318 and ACI 350R.

3.8 CLEANOUT INSTALLATION

A. Install cleanouts and riser extensions from sewer pipes to cleanouts at grade. Use cast-iron soil pipe fittings in sewer pipes at branches for cleanouts and cast-iron soil pipe for riser extensions to cleanouts. Install piping so cleanouts open in direction of flow in sewer pipe.
   1. Use heavy-duty, top-loading classification cleanouts.

B. Set cleanout frames and covers in concrete pavement with tops flush with pavement surface.

3.9 CONNECTIONS

A. Connect nonpressure, gravity-flow drainage piping to building's sanitary building drains specified in Division 22 Section "Sanitary Waste and Vent Piping."

B. Make connections to existing piping and underground manholes.
   1. Make connections into existing piping or to underground manholes by cutting opening into existing unit large enough to allow 3 inches of concrete to be packed around entering connection. Cut end of connection pipe passing through pipe or structure wall to conform to shape of and be flush with inside wall, unless otherwise indicated. On outside of pipe or manhole wall, encase entering connection in 6 inches of concrete for minimum length of 12 inches to provide additional support of collar from connection to undisturbed ground.

      a. Use concrete that will attain minimum 28-day compressive strength of 3000 psi, unless otherwise indicated.
      b. Use epoxy-bonding compound as interface between new and existing concrete and piping materials.

   2. Protect existing piping and manholes to prevent concrete or debris from entering while making tap connections. Remove debris or other extraneous material that may accumulate.

3.10 IDENTIFICATION

A. Materials and their installation are specified in Division 31 Section "Earth Moving." Arrange for installation of green warning tapes directly over piping and at outside edges of underground manholes.

   1. Use warning tape or detectable warning tape over ferrous piping.

3.11 FIELD QUALITY CONTROL

A. Clear interior of piping and structures of dirt and superfluous material as work progresses. Maintain swab or drag in piping, and pull past each joint as it is completed.

   1. Place plug in end of incomplete piping at end of day and when work stops.

2. Flush piping between manholes and other structures to remove collected debris, if required by authorities having jurisdiction.

B. Inspect interior of piping to determine whether line displacement or other damage has occurred. Inspect after approximately 24 inches of backfill is in place, and again at completion of Project.

1. Submit separate reports for each system inspection.
2. Defects requiring correction include the following:

a. Alignment: Less than full diameter of inside of pipe is visible between structures.
b. Deflection: Flexible piping with deflection that prevents passage of ball or cylinder of size not less than 92.5 percent of piping diameter.
c. Crushed, broken, cracked, or otherwise damaged piping.
d. Infiltration: Water leakage into piping.
e. Exfiltration: Water leakage from or around piping.

3. Replace defective piping using new materials, and repeat inspections until defects are within allowances specified.
4. Reinspect and repeat procedure until results are satisfactory.

C. Test new piping systems, and parts of existing systems that have been altered, extended, or repaired, for leaks and defects.

1. Do not enclose, cover, or put into service before inspection and approval by Engineer and Inspector.
2. Test completed piping systems according to LFUCG standards.
3. Schedule tests to be witnessed by Engineer with at least 48 hours advance notice.
4. Submit separate reports for each test.
5. Perform tests as follows:

a. Vacuum test manholes per ASTM C 1244M.

b. Hydraulic test manholes per ASTM C 969.

c. Mandrel deflection testing of pipes per UNI-TR-1.

d. Camera pipes and provide video recording per LFUCG standards.

6. Deflections, leaks and loss in test pressure constitute defects that must be repaired.
7. Replace leaking piping using new materials, and repeat testing until leakage is within allowances specified.

D. Leaks and loss in test pressure constitute defects that must be repaired.

E. Replace leaking piping using new materials, and repeat testing until leakage is within allowances specified.

3.12 CLEANING

A. Clean interior of piping of dirt and superfluous material. Flush with potable water.

END OF SECTION 221313

SECTION 23 0200 - HVAC EQUIPMENT AND HYDRONIC SPECIALTIES

1. GENERAL

A. The Contractor's attention is directed to the General and Special Conditions, General Conditions-Mechanical and to all other Contract Documents as they apply to this branch of the work. Attention is also directed to all other sections of the Contract Documents which affect the work of this section and which are hereby made a part of the work specified herein.

B. The Contractor shall provide in complete working order the following heating, ventilation and air conditioning equipment located as indicated and installed, connected and placed in operation in strict accordance with the manufacturer's recommendations. All equipment shall be factory painted and, where applicable, factory insulated and shall, where such standards exist, bear the label of the Underwriters Laboratory.

C. Each subcontractor shall be responsible for their own completion of System Verification Checklists/Manufacturer’s Checklist.

D. Factory startup is required for all HVAC equipment. In general, as part of the verification process, equipment suppliers shall perform start-up by their factory authorized technicians and shall complete and submit start-up reports/checklists. This shall include air handling units, boilers, chillers, cooling towers, VFDs, etc.

E. All HVAC equipment shall comply with the latest provisions of ASHRAE Standard 90 and/or International Energy Conservation Code 2012, whichever is more stringent.

F. Installation of all heating, ventilating and air conditioning systems shall be performed by a master HVAC contractor licensed in the state the work will be performed.

G. Note to Suppliers and Manufacturers Representative furnishing proposals for equipment for the project:

(1) Review the Controls Section of these Specifications (if applicable) to determine controls to be furnished by the equipment manufacturer, if any. The Contractor shall provide all controls with equipment unless specifically listed otherwise.

(2) Review the section of these specifications entitle: SHOP DRAWINGS, DESCRIPTIVE LITERATURE, MAINTENANCE MANUALS, PARTS LISTS, SPECIAL KEYS, TOOLS, ETC., and provide all documents called for therein.

(3) Ensure that the equipment which you propose to furnish may be installed, connected, placed in operation and easily maintained at the location and in the space allocated for it.

(4) Determine from the Bid Documents the date of completion of this project and ensure that equipment delivery schedules can be met so as to allow this completion date to be met.

(5) Where manufacturers’ temperature controls are specified, they shall be in full compliance with International Mechanical Code Section 606 including automatic smoke shut down provisions.

(6) Provide factory start-up on site by a factory representative (not a third-party contractor) for all HVAC equipment, including fan coil units etc. Submit factory start-up reports to the Engineer.

(7) Provide training to the Owner by a factory representative for each type of equipment. Training shall be a minimum of eight (8) hours on site and the Engineer shall be notified one (1) week in advance of the training. Training shall only occur when the systems are complete and 100% functional. All training shall be video taped.

(8) Review the Section on Motor Starters and Electrical Requirements for Mechanical Equipment.

(9) All condensate producing equipment shall be provided with a condensate trap as recommended by the equipment manufacturer and a condensate overflow switch.

(10) Provide low ambient and all required controls and accessories on all HVAC equipment to ensure they can provide cooling during the winter season.

(11) Provide a complete air tight enclosure with opening door that seals air tight for all filters on air moving equipment.

(12) All equipment shall be furnished for a single point electrical connection unless specifically excluded as a requirement.

2. EQUIPMENT

A. SPLIT SYSTEM UNITS
B. AIR ROTATION UNIT
C. DEDICATED OUTSIDE AIR UNIT
D. VENTILATION FANS

2. FACTORY START-UP REPORTS

A. Provide factory start-up on site by a factory representative (not a third-party contractor) for all HVAC equipment, including pumps, VFD's, boilers, chillers, cooling towers, heat pumps, rooftop units, etc. Submit factory start-up reports to the Engineer. The Mechanical Contractor and the Controls Contractor shall have a representative on site to correct all deficiencies noted by the factory representative. For each deficiency noted, documentation of corrective action taken shall be submitted to Engineer.

B. At a minimum, the report submitted to the Engineer shall include the following data:

(1) Blower Coil and Fan Coil Units

a. Fan bearings lubrication
b. Fan not vibrating
c. Fan motor volts / amps
d. Fan belt tension, if applicable
e. Sheave alignment, if applicable
f. Coils clean
g. Filters clean
h. Fan rotation direction

END OF SECTION 23 0200

SECTION 23 1100 - REGISTERS, GRILLES, DIFFUSERS & LOUVERS

1. REGISTERS, GRILLES AND DIFFUSERS

   A. GENERAL

   Alternate R, G & D selections, other than manufacturers and models listed below, will be accepted, provided quality, function and characteristics are equivalent. Acceptable alternates are Price, Titus, Metalaire, Carnes, Anemostat, Kruegar, and Tuttle & Bailey. Shop drawings shall identify and list all characteristics of each device exactly as scheduled herein. Finishes shall be selected by the Architect. If Architect elects not to select color, all colors shall be off-white. Factory color samples shall be submitted with shop drawings.

   B. SELECTION

   Refer to the Selections Scheduled on the Drawings.

2. LOUVERS

   A. GENERAL

   Alternate louver selections, other than manufacturer and model listed below, will be accepted, provided quality, function and characteristics are equivalent. Acceptable alternates are Ruskin, Air Balance, Airline, Airstream, Louvers and Dampers and Penn. Shop drawings shall identify and list all characteristics of each device exactly as scheduled herein. Finishes shall be selected by the Architect unless scheduled otherwise.

   B. LINTELS

   Provide lintels above all louvers as required. Refer to the lintel schedule in Specification Section 201100.

   C. SELECTION

   Refer to the Selections Scheduled on the Drawings.

END OF SECTION 23 1100

SECTION 23 1200 - SHEET METAL AND FLEXIBLE DUCT

1. GENERAL

A. The Contractor's attention is directed to the General and Special Conditions, General Requirements-Mechanical and to all other Contract Documents as they apply to this branch of the work. Attention is also directed to all other sections of the Contract Documents which affect the work of this section and which are hereby made a part of the work specified herein.

B. This branch of the work includes all materials, labor and accessories for the fabrication and installation of all sheet metal work as shown on the drawings and/or as specified herein. Where construction methods for various items are not indicated on the drawings or specified herein, all such work shall be fabricated and installed in accordance with the recommended methods outlined in the latest edition of SMACNA's HVAC Duct Construction Standards, Metal and Flexible, and its subsequent addenda. HVAC duct systems shall be fabricated and installed in accordance with the SMACNA duct construction standards (SMACNA-HVAC and SMACNA-Seismic) including Appendix B of the Seismic Restraint Manual Guidelines for Mechanical Systems. These references and plate numbers shall be used by the Engineer for required sheet metal thicknesses and final acceptance of methods of fabrication, hanging, accessories, etc. All equipment furnished by manufacturers shall be installed in strict accord with their recommended methods.

C. Ductwork shall be constructed and installed per the latest edition of the International Mechanical Code.

D. Ductwork shall be kept clean at all times. Ductwork stored on the job site shall be placed a minimum of 4” above the floor and shall be completely covered in plastic. Installed ductwork shall be protected with plastic to prohibit dust and dirt from entering the installed ductwork, air handling unit, terminal devices, etc. Provide temporary filters on <u>all</u> return grilles and duct openings if the units are running prior to the building being satisfactorily cleaned. Do not install the ductwork if the building is not “dried-in”. If this is required, the open ends of duct shall be covered in plastic to protect. The Owner/Engineer shall periodically inspect that these procedures are followed. If deemed unacceptable, the Contractor shall be required to clean the duct system utilizing a NADCA certified Contractor.

Prior to purchase and fabrication of ductwork (shop fabricated or manufactured), the Contractor shall coordinate installations with new and existing conditions. Notify the Engineer if there are any discrepancies for resolution.

E. Provide a SMACNA duct cleanliness level “C” per the latest SMACNA standards. [Refer to LEED / Healthcare Requirements]

F. If separate filter grilles are specified for an HVAC unit the Contractors shall remove any unit mounted filters and blank off the unused filter access opening with sheet metal and seal air tight.

G. Wall Penetrations: Where ducts penetrate interior or exterior walls, the walls shall be sealed air tight. Refer to the sleeving, cutting, patching, and repairing section of the specifications for additional requirements.

H. Duct dimensions indicated are required <u>inside clear</u> dimensions. Plan duct layouts for adequate insulation and fitting clearance.

2. LOW PRESSURE DUCTWORK

A. General (Low Pressure)

(1) Double turning vanes shall be installed in all square turns and in any other locations indicated.

(2) Provide a “high efficiency” type take-off with round damper (Flexmaster STOD-B03 or approved equal) for all round duct branches from a rectangular main to a GRD. Refer to the detail on the drawings for all installation requirements.

(3) Cross-break all ducts where any duct section dimension or length is 18" or larger.

(4) Air volume dampers shall be installed in each duct branch takeoffs and/or where indicated, whichever is more stringent. All such dampers shall be accessible without damage to finishes or insulation and shall be provided where required for proper system balance.

(5) Splitter dampers shall be provided in all rectangular supply air duct tees. Damper blade operator shall extend a minimum two inches thru the insulation.

(6) Unless otherwise dimensioned on the drawings, all diffusers, registers and grilles shall be located aesthetically and symmetrically with respect to lighting, ceiling patterns, doors, masonry bond, etc. Locate all supply, return and exhaust diffusers and grilles in the locations shown on the architectural reflected ceiling plan.

(7) Ducts shall be hung by angles, rods, 18 ga. minimum straps, trapezes, etc., in accordance with SMACNA's recommended practices. Duct supports shall not exceed 12 ft intervals. There shall be no less than one set of hangers for each section of ductwork. Where ductwork contains filter sections, coils, fans or other equipment or items, such equipment or items shall be hung independently of ductwork with rods or angles. Do <u>not</u> suspend ducts from purlins or other weak structural members where no additional weight may be applied. If in doubt, consult the structural engineer.

(8) Provide approved flexible connectors at inlet and outlet of each item of heating and cooling equipment whether indicated or not. Install so as to facilitate removal of equipment as well as for vibration and noise control.

(9) All ductwork connections, fittings, joints, etc., including longitudinal and transverse joints, seams and connections shall be sealed. Seal with medium pressure, smooth-textured, water based duct sealant. Sealant shall be UL 181B-M listed, UL 723 classified, NFPA 90A & 90B compliant, permanently flexible, nonflammable, and rated to 15” wg. Apply per manufacturer's recommendations. Contractors shall ensure no exposed sharp edges or burrs on ductwork.

(10) All angular turns shall be made with the radius of the center line of the duct equivalent to 1.5 times the width of the duct.

(11) Miscellaneous accessories such as test openings with covers, latches, hardware, locking devices, etc., shall be installed as recommended by SMACNA and/or as indicated. Test openings shall be placed at the inlet and discharge of all centrifugal fans, coils, VAV boxes, fan sections of air handling units, at the end and middle of all main trunk ducts and where indicated. All such openings shall be readily accessible without damage to finishes.

(12) Whether indicated or not, provide code approved, full sized fire dampers at all locations where ductwork penetrates fire rated walls. Fire stop rating shall meet or exceed the rating of the wall.

Provide an approved access panel at each fire damper located and sized so as to allow hand reset of each fire dampers. All such fire dampers and access panels shall be readily accessible without damage to finishes. Refer to Architectural Plans for locations of fire rated walls. All access doors shall be 16"x16" or as high as ductwork permits and 16" in length.

(13) The Contractor who installs the sheet metal shall furnish to the Air Balancing Contractor, a qualified person to assist in testing and balancing the system.

(14) All fans and other vibrating equipment shall be suspended by independent vibration isolators.

(15) The interior surface of the ductwork connecting to return/exhaust air grilles shall be painted flat black. The ductwork shall be painted a minimum of 24" starting from the grille.

B. Materials (Low Pressure Single Wall)

(1) Ductwork, plenums and other appurtenances shall be constructed of the following:

a. Steel sheets, zinc coated, Federal Specification 00-S-775, Type I, Class E & ASTM A93-59T with G-90 zinc coating or aluminum alloy sheets 3003, Federal Specification AA-A-359, Temper H-14. Utilize Aluminum in MRI Scan Rooms or NMR Room applications.

b. Exposed ductwork in finished spaces requiring insulation such as gymnasiums, etc., shall be dual wall ductwork.

(2) Ductwork, plenums and other appurtenances shall be constructed of the materials of the minimum weights or gauges as required by the latest SMACNA 2" W.G. Standard or the below table, whichever is more stringent. When gauge thickness differs, the heavier gauge shall be selected. The below table shall serve as a minimum:

ROUND DUCT		RECTANGULAR DUCT	
DIA., INCHES	GAUGE	WIDTH, INCHES	GAUGE
3 TO 12	26	UP TO 12	26
12 TO 18	24	13 TO 30	24
19 TO 28	22	31 TO 54	22
29 TO 36	20	55 TO 84	20
37 TO 52	18	85 AND ABOVE	18

C. Materials (Low Pressure Double Wall Ductwork)
(Designer Edit locations below to match project requirements)

(1) Install Double Wall Ductwork in the following areas:

a. Band Storage Room
b. Lobbies (where exposed)
c. Above areas with partial ceilings or clouds.

d. Anywhere supply ductwork is installed exposed to view in spaces (other than mechanical rooms)
e. At all other locations indicated on drawings.

(2) Furnish and install where indicated double wall duct. The double wall duct shall be Eastern Sheet Metal, United McGill, Semco or approved equivalent. The duct shall have an inner shell, a 1-inch layer of fiberglass insulation and an outer pressure shell.

(3) Ductwork outer shell shall be spiral, lock-seam construction fabricated from galvanized steel meeting ASTM-527 standard. Any ductwork exposed to view shall be constructed of G90 galvanized steel, 20 gauge, and shall be supported as required with aircraft cables and self-tightening locks. Ductwork shall be constructed as specified in LOW PRESSURE DUCTWORK.

(4) Inner shell for spiral pipe shall be solid galvanized steel and constructed of the minimum gauge specified with 3 intermediate reinforcing ribs.

(5) Inner shell for fittings shall be galvanized steel. All fittings shall be manufactured by the same manufacturer as the spiral pipe. Fittings shall be constructed a minimum of 22 Ga.

(6) The fiberglass liner shall have a maximum thermal conductivity (k) factor of 0.27 btu per hour per square foot per degree Fahrenheit per inch thickness at 75-degree F ambient temperature.

(7) All double wall ductwork will be furnished with factory installed flanges equal to Eastern Sheet Metal Flange which shall consist of a 1.5 outer flange and an inner secondary flange which shall keep the inner flange concentric and eliminate inner wall connections. Flanges requiring inner couplings will not be allowed, no insulation shall be exposed to the airstream at the connections.

(8) All grille and register taps shall be factory manifolded. Field installed taps will not be allowed. Manifolded taps may be tack welded and caulked for appearance. Only taps for grilles and registers may be provided this way. All other fittings shall be full body welded.

D. Miscellaneous (Low Pressure)

(1) Un-insulated Flexible ductwork (Use Only Where Indicated)

a. Un-insulated flexible ductwork shall be corrugated aluminum. No sections shall be greater than five feet in length. Ductwork shall be UL rated and in accordance with IMC.

b. Flexible ductwork installed in a return or exhaust or other negative static pressure application shall be rated for installation in negative pressure systems.

c. Provide Titus “FlexRight” or equal flexible duct bracing at each diffuser connection utilizing flexible ductwork.

(2) Insulated Flexible Duct (Use Only Where Indicated)

a. Owens/Corning or equivalent, 1 ½’’ inch thick fiberglass insulation; flexible liner; with aluminum pigment vinyl vapor barrier facing. Insulated flexible duct shall meet Fire Hazards Standards of NFPA 90A and IMC, flame spread not to exceed 25, smoke develop and fuel contributed not to exceed 50 when tested in accordance with ASTM-E84. Minimum R-value of 6.0, tested in accordance with ASTM C177.71. Flexible duct may be used only for runouts and no sections shall be more than five feet in length.

b. When flexible duct is located in areas where it will be visible because the ceiling allows views to the ductwork above, the flexible duct shall be black. The black color shall be factory coloring and not field applied.

c. Flexible duct shall not be used in areas where there is no ceiling.

d. Flexible ductwork installed in a return or exhaust or other negative static pressure application shall be rated for installation in negative pressure systems

e. Provide Titus “FlexRight” or equal flexible duct bracing at each diffuser connection utilizing flexible ductwork.

(3) Insulated Flexible Duct – Steel or Aluminum (Use Only Where Indicated)

a. Flexible duct shall be a factory-fabricated assembly consisting of an all steel or aluminum material. Plastic with spiral wire flexible duct is not permitted.

b. All supply flexible duct shall be insulated with 1 ½ inch blanket of glass wool with an outer moisture barrier. The insulation assembly shall have a flame spread of not more than 25 and a smoke development rate of not over 50.

c. Flexible duct shall be rated for 10 inches W.G. static pressure.

d. A single length of flexible duct shall not exceed 4’0”.

e. The minimum bend radius shall be 1 ½ times the duct diameter. The radius shall be measured to the inside edge of the flexible duct.

f. Total offset in any run of flexible duct shall not exceed 90 degrees.

g. Provide a minimum of one hanger of each run of flexible duct. The hanger must be strapped around the flexible duct and secured to the structure above. Hangers shall not be attached to other mechanical or electrical objects. Hangers may be attached to an approved trapeze. Ceiling grid shall not be used to fabricate a trapeze. Support hangers shall be installed horizontal. Screws shall not be used to penetrate the flexible duct to attach the hanger.

h. Flexible duct shall be secured to the rigid duct and appliance with a nylon adjustable, self-locking, strap and a minimum of three sheet metal screws. The flexible duct shall be sealed airtight at each connection with self-adhesive aluminum tape. Fiber or cloth duct tape is not permitted to seal rigid or flexible duct.

i. All flexible duct shall be pressure tested by a testing and balancing agency to ensure the installation is airtight.

(4) Flexible Connectors: Duro-Dyne, Ventfabrics, Inc., U.S. Rubber or equivalent; conforming to NFPA Pamphlet No. 90-A; neoprene coated glass fabric; 20 oz. for low pressure ducts secured with snap lock.

(5) Turning Vanes: Duro-Dyne or equivalent fabricated as recommended by SMACNA: noiseless when in place without mounting projections in ducts. All turning vanes shall be double blade type.

(6) Splitter Damper: Splitter damper shall be constructed of 16-gauge galvanized steel. Provide with operating hardware by Ventfabrics, Inc. to include damper blade bracket, ball joint bracket and operator shaft. Operator shall extend two inches from duct to allow for external insulation, where required. Regulator shall seal operator shaft air tight. Install hardware as recommended by manufacturer.

(7) Access Doors; In Ductwork: Flexmaster TBSM, Air Balance, Vent Products or equal. Access doors for rectangular ducts shall be 16"x16" where possible. Otherwise install as large an access door as height permits by 16" in length. Door shall be 1” thick double-wall insulated with double cam lock. Ducts with continuous hinge are not acceptable per university standards. Provide in ducts where indicated or where required for servicing equipment whether indicated or not. Provide a hinged access door in duct adjacent to all fire, smoke and control dampers for the purpose of determining position. Access doors shall also be provided on each side of duct coils (water, electric, steam, etc.) and downstream side of VAV boxes and CAV boxes.

(8) Architectural Access Doors in Ceilings or Walls: Provide where required to access equipment, dampers, valves, filters, etc. Provide Kees D Panel, Cesco, Milcor or equal. Panels shall be 24”x24” in size and constructed with 16 gauge galvannealed steel for door and frame. In finished areas, provide with primed steel with 1” border to accept architectural specified finish. In Mechanical, Electrical, or service spaces, provide brushed satin finish with 1” border. Door shall include three (3) screwdriver operated cam latches and concealed continuous pivoting rod hinge. Door shall open 175 degrees. For masonry construction, furnish frames with adjustable metal masonry anchors. For fire rated units, provide manufacturer’s standard insulated flush panel/doors with continuous piano hinge and self-closing mechanism. The Contractor shall include all required access doors in the bid and shall coordinate with the General Contractor prior to the bid to ensure a complete project.

(9) Security Architectural Access Doors in Walls: Provide where required to access equipment, dampers, valves, filters, etc.Provide Kees SSAP Panel, Cesco, Milcor or equal. Panels shall be 24”x24” in size and constructed with 12-gauge steel for door and frame. In finished areas, provide with primed steel with 1” border to accept architectural specified finish. In Mechanical, Electrical, or service spaces, provide brushed satin finish with 1” border. Door shall include key-operated cylinder dead bolt lock (coordinate cylinders and keys with Owner to match facility standards) and concealed continuous pivoting rod hinge. Door shall open 175 degrees. For masonry construction, furnish frames with adjustable metal masonry anchors and straps. For fire rated units, provide manufacturer’s standard insulated flush panel/doors with continuous piano hinge and self-closing mechanism. The Contractor shall include all required access doors in the bid and shall coordinate with the General Contractor prior to the bid to ensure a complete project.

(10) Volume Dampers (Rectangular): Ruskin, Model MD35 or Empco, Air Balance; Louvers and Dampers, Titus, Carnes, Cesco/Advanced Air, Creative Metals, United Air, Pottorf rectangular volume dampers. Frames shall be 4" x 1 "x 16-gauge galvanized steel. Blades shall be opposed blade 16-gauge galvanized steel with triple crimped blades on 6” centers. Linkage shall be concealed in jamb. Bearings shall be ½” nylon. Maximum single section size shall be 48" wide and 72" high. Provide with Ventfabrics 2" high elevated dial regulator to avoid damper handle from conflicting with duct insulation. Provide permanent mark on dial regulator to mark air balance point.

(11) Volume Dampers (Round): Ruskin, Model MDRS25 or, Empco, Air Balance; Louvers and Dampers, Titus, Carnes, Cesco/Advanced Air, Creative Metals, United Air, Pottorff round volume dampers. Dampers shall be butterfly type consisting of circular blade mounted to axle. Frames shall be 20-gauge steel, 6" long. Damper blades shall be 20-gauge galvanized steel. Axle shall be 3/8"x6” square plated steel. Bearing shall be 3/8” nylon. Provide with Ventfabrics 2" high

elevated dial regulator to avoid damper handle from conflicting with duct insulation. Provide permanent mark on dial regulator to mark air balance point.

(12) Fire Dampers: Fire dampers shall comply with IMC and shall be constructed and tested in accordance with UL Safety Standard 555. Each fire damper shall have a 1-1/2 or 3-hour fire protection rating as required by fire wall. Damper shall have a 165°F fusible link, and shall include a UL label in accordance with established UL labeling procedures. Fire damper shall be equipped for vertical or horizontal installation as required by the location shown. Fire dampers shall be installed in wall and floor openings utilizing 16-gauge minimum steel sleeves, angles, other materials, practices required to provide an installation equipment to that utilized by the manufacturer when dampers were tested at UL. Installation shall be in accordance with the damper manufacturer's instructions. **All fire dampers shall be dynamic. Static fire dampers are not allowed**. Provide velocity level and pressure level as required for application (if in doubt, contact Engineer). Fire dampers shall be Ruskin Type DIBD for 1-1/2-hour rating or Ruskin Type DIBD 23 for a 3-hour rating. Other acceptable manufacturers are Air Balance, Prefco, Greenheck, Nailor, or Safe Air. Provide an access door for fire damper reset at all fire damper locations.

(13) Motor Driven Smoke Dampers – Air Foil Blade: Provide Ruskin SD60 smoke damper where required by the locations of smoke partitions or as shown on the plans, whichever is more stringent. Other acceptable manufacturers are Air Balance or Pottorff. All smoke dampers shall be three inches larger than HVAC duct in each direction. Frame shall be a minimum of 18-gauge galvanized steel formed into a structural hat channel shaper with tabbed corners for reinforcement. The blade shall be airfoil shaped, constructed of a dual skinned galvanized steel, 14-gauge equivalent thickness, on 6" maximum centers. Bearings shall be stainless steel sleeve turning in an extruded hole in the frame. Jamb seal shall be stainless steel flexible metal compression type. Each smoke damper shall be classified by Underwriters Laboratories as a Leakage Rated Damper for use in smoke control systems under the latest version of UL555S, and bear a UL label attesting to same. As part of the UL qualification, dampers shall have demonstrated a capacity to operate (to open and close under HVAC system operating conditions) with pressures of at least the maximum possible of the HVAC system in the closed position, and the system maximum duct air velocity in the open position. In addition to the leakage ratings already specified herein, the dampers and their actuators shall be qualified under UL555S to an elevated temperature of 350 degrees F. Appropriate electric actuators shall be installed by the damper manufacturer. Refer to building fire alarm and controls for exact type. Actuator to be mounted outside of air stream. The pressure drop shall not be greater than .16" wg @ 2500 FPM when tested by an independent laboratory. Provide factory supplied caulked sleeve, gauge as required to meet manufacturer UL installation requirements.

(14) Motor Driven Fire/Smoke Dampers – Air Foil Blade: Fire damper shall be constructed and tested in accordance with UL Safety Standard 555. The damper shall be Ruskin FSD60. Other acceptable manufacturers are Air Balance or Pottorff. The blade shall be airfoil shaped, constructed of a dual skinned galvanized steel, 14-gauge equivalent thickness, on 6" maximum centers. Frame is to be a minimum of 16-gauge galvanized steel, rollformed into a structural hat shape channel. Frame seals shall consist of flexible, compression type stainless steel. The damper and actuator electric shall be rated to an elevated temperature or 250 degrees F or 350 degrees F. In addition, the damper must be factory supplied with actuator and sleeve to comply with the requirements of UL 555S. These dampers shall have been constructed and tested in compliance with U.L. Standard 555 and U.L. Standard 555S, current editions. The pressure drop shall not be greater than .25 in.wg. At 2500 fpm when tested by an independent laboratory. Each damper shall bear an approved U.L. label identifying its classification as a Dynamic Rated Fire Damper (Static Rated dampers are not acceptable), and shall further be classified by U.L. as a Leakage Rated Damper for use in Smoke Control Systems. Each damper shall have a 1-1/2-

hour fire protection rating, 212EF U.L. Listed fusible link and a leakage class I. In addition to the leakage ratings already specified herein, the dampers and their actuators shall be qualified under UL555S to an elevated temperature of 350 degrees F. Appropriate electric actuators shall be installed by the damper manufacturer. Refer to building fire alarm and controls for exact type. Provide factory supplied caulked sleeve, 20 gauge on dampers through 84" wide and 18 gauge above 84" wide. Actuator to be mounted outside of air stream. Provide factory supplied caulked sleeve, gauge as required to meet manufacturer UL installation requirements.

(15) Motor Driven Control Dampers – Provide Ruskin Model CD50 air foil damper as shown on the plans. Frame shall be a minimum of 16-gauge galvanized steel formed into a structural hat channel shaper with tabbed corners for reinforcement. The blade shall be airfoil shaped, constructed of a dual skinned galvanized steel, 14-gauge equivalent thickness, 6 inches wide. Bearings shall be stainless steel sleeve turning in an extruded hole in the frame. Jamb seal shall be stainless steel flexible metal compression type. Blade seals shall be equal to Ruskinprene. Leakage Rating shall be Pressure/Class 1.

3. DUCT SCHEDULE**- TO BE EDITED**

A. Supply Ducts or Outside Air Ducts:

(1) Ducts Connected to Fan Coil Units, Furnaces, Heat Pumps, downstream of Terminal Units <**Insert equipment**>:

a. Pressure Class: Positive 2-inch wg Refer to Low Pressure requirements as outlined in section 2 of this spec.
b. Minimum SMACNA Seal Class: C.
c. SMACNA Leakage Class for Rectangular: 24.
d. SMACNA Leakage Class for Round and Flat Oval: 12.

(2) Ducts Connected to Constant-Volume Air-Handling Units (Air Rotation Units)

a. Pressure Class: Positive **[2][4, 6, or 10]**-inch wg Refer to **[Low Pressure requirements as outlined in section 2 of this spec]**.
b. Minimum SMACNA Seal Class: [**C] [A]**.
c. SMACNA Leakage Class for Rectangular: **[24] [6]**.
d. SMACNA Leakage Class for Round and Flat Oval: [**12] [3]**.

B. Return Ducts:

(1) Ducts Connected to Fan Coil Units, Furnaces, Heat Pumps, downstream of Terminal Units <**Insert equipment**>:

a. Pressure Class: Negative 2-inch wg Refer to Low Pressure requirements as outlined in section 2 of this spec.
b. Minimum SMACNA Seal Class: C.
c. SMACNA Leakage Class for Rectangular: 24.
d. SMACNA Leakage Class for Round and Flat Oval: 12.

(2) Ducts Connected to Air-Handling Units <**Insert equipment**>:

a. Pressure Class: Negative **[2][4, 6, or 10]**-inch wg Refer to **[Low Pressure requirements as outlined in section 2 of this spec]** [M**edium Pressure requirements as outlined in section 3 of this spec]**.

b. Minimum SMACNA Seal Class: [**C] [A]**.
c. SMACNA Leakage Class for Rectangular: **[24] [6]**.
d. SMACNA Leakage Class for Round and Flat Oval: **[12] [3]**

C. Exhaust/Relief Ducts:

(1) Ducts Connected to Exhaust Fans <**Insert equipment**>:

a. Pressure Class: Negative **[2][4, 6, or 10]**-inch wg Refer to **[Low Pressure requirements as outlined in section 2 of this spec]** [M**edium Pressure requirements as outlined in section 3 of this spec]**.
b. Minimum SMACNA Seal Class: [**C] [A]**.
c. SMACNA Leakage Class for Rectangular: **[24] [6]**.
d. SMACNA Leakage Class for Round and Flat Oval: [**12] [3]**

(2) Ducts Connected to Air-Handling Units <**Insert equipment**>:

a. Pressure Class: Positive or Negative **[2][4, 6, or 10]**-inch wg Refer to **[Low Pressure requirements as outlined in section 2 of this spec]** [M**edium Pressure requirements as outlined in section 3 of this spec]**.
b. Minimum SMACNA Seal Class: [**C] [A]**.
c. SMACNA Leakage Class for Rectangular: **[24] [6]**.
d. SMACNA Leakage Class for Round and Flat Oval: [**12] [3].**

(3) Ducts Connected to Laboratory Exhaust Fans <**Insert equipment**>:

a. Pressure Class: Negative **[4, 6, or 10]**-inch wg Refer to Medium Pressure requirements as outlined in section 3 as well as requirements outlined in the Hazardous Exhaust duct section of this spec.
b. Minimum SMACNA Seal Class: **[A] [Welded seams, joints, and penetrations].**
c. SMACNA Leakage Class: 3.

END OF SECTION 23 1200

SECTION 25 0100 - MOTOR STARTERS AND OTHER ELECTRICAL REQUIREMENTS FOR MECHANICAL EQUIPMENT

1. MOTOR STARTERS-GENERAL

   A. Where motor starters are required for mechanical equipment they are to be the responsibility of the Contractor furnishing the equipment as outlined herein.

   B. Motor starters shall be furnished by the Equipment Supplier with his equipment. Coordinate all requirements for starters with equipment suppliers and other trades.

   C. Motor starters shall be NEMA style. I.E.C.-style starters are not to be provided. Their sizing and installation shall be coordinated with the equipment manufacturer's requirements and in accordance with the National Electrical Code.

   D. Unless otherwise noted, provide combination starter/disconnects for all equipment requiring a starter.

2. ELECTRICAL REQUIREMENTS FOR MECHANICAL EQUIPMENT

   A. All mechanical equipment shall be provided for single point electrical connection unless specifically noted to the contrary. Refer to schedules and other sections of these specifications for further requirements. It is the responsibility of the Contractor to coordinate the electrical characteristics of all equipment with the electrical provisions indicated on the Contract Documents. The Contractor shall notify the Engineer in writing ten calendar days prior to bid of any discrepancy so a written clarification by Addendum may be made. If such notice is not given, the Contractor shall be responsible for any and all costs or delays associated with any changes required. Specification of equipment characteristics made during review of shop drawings shall not relieve the Contractor of this responsibility.

   B. The equipment manufacturer shall provide internally mounted fuses with his equipment, as required, to comply with the U.L. listing on the equipment name plate. (i.e., hermetically sealed compressors or equipment with name plate data that recommends or requires fuse protection.) See also, National Electrical Code, Article 440, and other applicable sections of the N.E.C.

   C. It is the Contractor's responsibility to furnish and install fusible or non-fusible disconnect switches or circuit breakers for disconnecting means as required by the Code for <u>all</u> electrically powered equipment. All power wiring from source, thru disconnecting means and motor starters to motor terminals or equipment junction box is to be furnished and installed by the Contractor. Each separate contractor engaged for the project shall coordinate with all other trades to ensure all necessary equipment and labor is included for fully functioning mechanical systems, installed per code requirements. Unless otherwise notes, provide combination starter/disconnects for all equipment requiring a starter.

   D. Final electrical connection of equipment shall be verified for proper voltage requirements in conjunction with the motor nameplate patch and actual wiring configuration. Any costs associated with damage to appliances motors, equipment, etc., connected to incorrect supply voltage shall be borne by the Contractor.

   E. Refrigeration condensing units with internal compressors shall be furnished with integral starter. The Contractor is to furnish and install a fusible disconnecting means with fuses sized to motor nameplate requirements. Coordinate wiring, mounting and style of disconnect switch at unit in field.

F. All interlock or other control wiring, unless specifically noted otherwise, is the responsibility of the Contractor.

G. All equipment shall be suitably enclosed. All enclosures for equipment shall be rated and approved for the environment in which it operates. (i.e., NEMA 1, NEMA 3R, NEMA 7, NEMA 12, etc.) Verify the requirement with the installation condition if not indicated on the plans.

H. Observe the following standards for manufacturers of equipment and selection of components.

(1) Starters, control devices and assemblies: NEMA, U.L. - (I.E.C. style not acceptable)

(2) Enclosures for electrical equipment: NEMA, U.L.

(3) Enclosed switches: NEMA, U.L.

(4) All electrical work, generally: National Electrical Code

(5) All electrical work in industrial occupancies: J.I.C. standards

(6) All electrical components and materials: U.L. listing required.

I. Where required, the Contractor is to provide mounting rails or channels to install starters with code-required clearances. Framing shall be solidly anchored by welding expansion shields in masonry or other approved anchorage. Frames are to be constructed of steel angles or pre-manufactured channel systems such as Unistrut, Kindorf or B-Line Company. Framing material shall be pre-finished with corrosion-resistant material or painted with two coats corrosion-resistant oil-based enamel.

3. REQUIREMENTS FOR MECHANICAL EQUIPMENT, 1/2 H.P OR LESS

A. This section describes requirements for small mechanical equipment such as (but not limited to) package terminal heating/cooling units, (water source heat pumps, etc.) VAV boxes, unit heaters, vertical and horizontal unit ventilators, exhaust fans, in-line fans, fan coil units, cabinet heaters and the like.

B. Small equipment with motor(s) of 1/2 H.P., single phase or less are generally not required to be furnished with NEMA-style starter(s), unless otherwise noted.

C. For such equipment, provide integral contactor or horsepower-rated relay where controlled by thermostat or other type of switch. Contactors or relays shall be as recommended by the manufacturer of the equipment, suitable for the service duty.

D. Provide transformer within unit as required to derive low voltage A.C. for thermostat control or derive from temperature controls panel, if available.

E. Provide internal fusing for unit motor and other loads in fuse block or in-line fuseholder. See also Article 2-B, this Section.

F. Where externally-mounted disconnecting means is required and would be impractical, unsightly or inappropriate in the judgment of the Engineer, disconnects shall be located within the unit. These disconnects may be fusible H.P.-rated snap switches or manual starters with overload elements, as required. Locate this and other electrical equipment within enclosure where easily accessible behind

access panel or door on unit, and as acceptable to the electrical inspector or local authority having jurisdiction. Refer to mechanical equipment schedules for further information.

G. Where fractional horsepower duplex pumps such as water circulators, sump pumps, etc. are provided, they shall be provided with alternators, cordsets, etc., as required for a complete installation.

4. REQUIREMENTS FOR MECHANICAL EQUIPMENT, 3/4 H.P. OR LARGER

A. This section describes requirements for mechanical equipment such as (but not limited to) exhaust fans, larger air handling units, cooling tower fans, water source heat pumps, chilled or hot water pumps, D.X. roof-top units, air compressors and the like.

B. Provide premium efficiency motors.

C. Equipment provided with motor(s) of 3/4 H.P. and larger, single or three-phase are required to be furnished with starters suitable for the load(s) specified. It is recommended that starters be furnished integrally with or mounted on equipment for field wiring by the Contractor. Where starters are furnished separate from equipment, furnish templates or rough-in diagrams to the appropriate contractor for his use in installation.

D. All starters shall be size 0 minimum. They shall be constructed and tested in accord with latest edition of NEMA standards. All starters shall be across-the-line magnetic type, unless indicated otherwise. On motors of 20 H.P. or greater rating, the supplier shall provide starters capable of limiting inrush currents. These shall be of the wye-delta, reduced voltage open-transition type, or electronic controlled, as required. Do not utilize closed transition starters unless specifically indicated.

E. Magnetic starters shall be furnished with the following characteristics and accessories as a minimum. See other sections of these specifications and mechanical schedules for further requirements.

(1) Contacts shall be silver-alloy, double-break type. Contacts shall be replaceable without removal of wiring or removal of starter from enclosure. Number of contacts shall be as required for service indicated. Contacts shall be gravity dropout type, positive operation.

(2) Coil voltage shall be 120 volts, A.C., 60 HZ or less, as required to suit control systems available voltages. Coils shall be of molded construction, rated for continuous duty. Provide coil clearing contact as required.

(3) Provide control transformer of adequate K.V.A. as required on all starters with line-to-line voltages higher than 120 volts A.C. Provide fuse block and slow-blow fuse to protect control transformer per NEMA, N.E.C. and U.L.

(4) Provide hand-off-auto selector switch in face of starter, wired into hand and off switch positions. Auto position (if needed) to be field wired as indicated on plans or schedules for automatic control. Provide a green run pilot light.

(5) Provide NEMA Class 20 resettable overload relays, accurately sized to the motor nameplate rating of the motor served and the temperature differential between motor and controller. Overloads shall be easily replaceable, and resettable without opening enclosure, via a push button or similar means. Class 10 or Class 30 overloads may be used, depending on the type of anticipated service.

(6) Provide at least one N.O. and one N.C. auxiliary contact (field-convertible to opposite operation) with each starter. Refer to mechanical details or schedules for additional requirements, if any. All starters shall have space for two additional single-pole contacts.

(7) All starters shall be thru-wiring type.

(8) Provide phase failure sensing relay to open starter coil circuit (on loss of one or more phases) on all three-phase starters controlling motors of 15 H.P. or larger.

(9) Provide power factor correction capacitors on motors of 15 H.P. or larger where predicted power factor based on manufacturer's data will fall below 0.90%. Capacitors shall be of the unit-cell type, in single enclosure with discharge resistors and tank overpressure circuit interrupter for safety.

5. REQUIREMENTS FOR WIRING

A. All wiring, including controls, interlock, miscellaneous power, sensors, thermostats, etc., shall be installed in metallic raceway systems that are in compliance with all Division 26 requirements of these Specifications, unless specifically noted otherwise. Open cabling systems will only be permitted where specifically permitted within the Division 26 Specifications and if less than 50 volts A.C. peak-to-peak or 50 volts maximum D.C.

B. Where open cabling is permitted, it shall be installed with proper support as specified in the Division 26 Specifications.

C. Where open cabling is permitted, and installed in environmental air plenum (return, relief, supply, etc.), the materials installed shall be in compliance with N.E.C. Articles 700, 725, 770 (for fiber optic), 780 and 800.

D. Where open cabling is permitted, it shall only be installed open in accessible spaces. Where concealed in walls, it shall be routed through raceways to outlet box(es) for the terminal device.

6. INVERTER DUTY MOTORS

A. Motors which are controlled by variable frequency drive shall be:

(1) NEMA MG-1 Part 31 rated for Inverter Duty.

(2) Furnished with shaft grounding kit for all motors:

a. Motors less than 100 HP in size shall be furnished with shaft grounding kit, Aegis SGR Bearing Protection Ring or equal. One shaft grounding ring and related hardware shall be provided on drive end or non-drive end of motor per manufacturer’s instructions. These shall be factory mounted and installed on the exterior of the motor to allow for visual inspection. Ground motor frame per manufacturer’s instructions. Install kit in strict accordance with manufacturer’s instructions.

END OF SECTION 25 0100

SECTION 25 0200 – INSTRUMENTATION AND CONTROL FOR HVAC

PART 1 - GENERAL

RELATED DOCUMENTS:

Drawings and general provisions of the Contract, including General and Supplementary Conditions, General Mechanical Provisions and General Requirements, Division 1 Specification Sections apply to the work specified in this section.

DESCRIPTION OF WORK:

Furnish a BACnet system compatible with existing University systems. All building controllers, application controllers, and all input/output devices shall communicate using the protocols and network standards as defined by ANSI/ASHRAE Standard 135-2001, BACnet. This system shall communicate with the University of Kentucky Facility Management's existing BACnet head-end software using BACnet/IP at the tier 1 level and BACnet/MSTP at the tier 2 level. No gateways shall be used for communication to controllers installed under section. BACnet/MSTP or BACnet/IP shall be used for all other tiers of communication. No servers shall be used for communication to controllers installed under this section. If servers are required, all hardware and operating systems must be approved by the Facilities Management Controls Engineering Manager and/or the Facilities Management Information Technology Manager.

All Building Automation Devices should be located behind the University firewall, but outside of the Medical Center Firewall and on the environmental VLAN.

Provide all necessary hardware and software to meet the system's functional specifications. Provide Protocol Implementation Conformance Statement (PICS) for Windows-based control software and every controller in system, including unitary controllers. These must be in compliance with Front End systems PICS and BIBBS and attached Tridium PICS and BIBBS. Provide all hardware and software to backup, restore, troubleshoot and install system. Software licensing upgrades will also need to be included to support all new BACnet devices/points added within the project for the University of Kentucky Facilities Management's head-end system. Software, backups, unitary, and ASC files shall be delivered to UEM (Utilities & Energy Management) for archiving purposes.

When providing a JACE or equivalent tier-1 controller, the licenses for ALL available points must be purchased by the installing contractor. It will not be acceptable for an installing contractor to install a JACE in a manner in which only part of the licenses for the available capacity have been purchased. Any contractor who is required to utilize an existing JACE to accomplish his final Tie-in to Tridium, must include the cost to accommodate his additional points BOTH at the local JACE level as well as the head-end Tridium level.

Prepare individual hardware layouts, interconnection drawings and software configuration from project design data.

Design, provide, and install all equipment cabinets, panels, data communication network cables needed, and all associated hardware.

Provide and install all interconnecting cables between supplied cabinets, application controllers, and input/output devices.

Provide complete manufacturer's specifications for all items that are supplied. Include vendor name of every item supplied.

Provide supervisory specialists and technicians at the job site to assist in all phases of system installation, startup, and commissioning.

Provide a comprehensive operator, administrator and technician training program as described herein.

Provide as-built documentation, programming software for use site wide, electronic copies of all diagrams, and all other associated project operational documentation (such as technical manuals on approved media, the sum total of which accurately represents the final system.

Furnish, install, and fit-up in complete working order, with all accessories required, the automatic temperature control and monitoring systems shown on the Drawings and specified herein. The systems shall be properly connected, piped and wired in a manner conforming to the laws, ordinances and codes now in force in the Commonwealth of Kentucky.

The controls and all listed I/O points from this project shall communicate with the University of Kentucky Facilities Management's existing BACnet software head-end station using BACnet/IP. All BACnet points shall be exposed to the University of Kentucky Facilities Management's head-end station. Graphics will be installed by UEM on the head-end system. All point and device names shall comply with the University Facilities Management standards and shall be approved before and included in the shop drawings submittal. Cooperate with the Owner (UEM) to ensure that all specified points and alarms communicate and operate on the head-end system. All point and device names shall comply with the University Facilities Management standards (format listed below, consult Utilities and Energy Management (UEM) for the correct abbreviations) and shall be included in the shop drawings submittal for review and approval. Point naming conventions and formats are listed further in this specification in the Direct Digital Controls Equipment section. Refer to University Standard 230553S02 for the AHU Naming Convention.

Related to the alarms, the contractor is to set up the alarm parameters specified by the system sequences of operations without enabling the alarms. Contractor is to provide a list of points containing alarm extensions to Owner (UEM). UEM will be responsible for doing the alarm names, alarm texts and enabling the alarm points provided on the list.

All work must be coordinated and scheduled with the UEM Controls group prior to any work being done on site.

Thermostats: Each terminal unit requires a thermostat for operation, unless specifically indicated on the Drawings to be slaved to another unit. Slaved terminal units shall be controlled to match the CFM and discharge air temperature of the master unit. Thermostat locations have been identified on the Drawings to the extent possible, but all such locations may not be shown. Provide the required thermostats whether or not shown on the Drawings. For those thermostats not shown on the Drawings, work out an acceptable location with the Architect/Engineer. Thermostats are to be provided with no doors.

Provide DDC controls for the air terminal units. Provide electronic operators controlled and monitored by direct digital control systems which shall include, but not be limited to, air handling systems, pumps, terminal units, etc.

The control equipment shall be complete and shall include, but not be limited to, all necessary valves, damper operators, pipe, fittings, etc.

Electronic Control System installer must physically demonstrate to Owner and Owner's representatives (UEM) via software simulations that the proposed building automation system and control sequences will function as outlined in the contract documents prior to field implementation.

Provide VFD's as specified in other sections.

The control and monitoring system for this project shall be made up using standard materials, equipment and components regularly manufactured for systems of this type. The system shall be complete in every respect and shall be a functioning system.

Electrical power wiring and interlock wiring for all controls, signal devices, equipment, alarms, etc., shall be in accordance with diagrams and instructions from the supplier of the systems. All power and control wiring, conduit and wiring connections required for the complete installation, including wiring to smoke dampers and combination fire/smoke dampers and their motors, shall be provided by this Contractor in accordance with Electrical specification requirements. Controls shall be on emergency power.

Refer to other Mechanical Division sections for installation of instrument wells, valve bodies, and dampers in mechanical systems; not work of this section.

QUALITY ASSURANCE:

Manufacturer: Subject to compliance with requirements, manufacturers offering controls that may be incorporated into the work at Tier 1 BACnet/IP include the following:

Honeywell
Johnson Controls
Vykon

Subject to compliance with requirements, manufacturers offering controls that may be incorporated into the work at Tier 2 BACnet/MSTP include the following:

Honeywell
Johnson Controls
Alerton
Distech

Acceptable controls manufacturers shall include any controls manufacturers which utilize a BACnet protocol in accordance with the specification. If the bidding manufacturer is not listed above, documentation for approval as an equal must be submitted 10 days prior to the bid opening date to allow for evaluation by the university.

Installing Contractor: Installing controls contractors must comply with the following requirements:

The installing systems integration contractor has been in the business of installing BACnet controls for the last 5 years minimum. In addition, the installing systems integration contractor needs to demonstrate with documentation that they have provided the controls in a minimum of (3) hospital or university renovation projects of similar size and scope where they utilized a BACnet system.

The systems integration contractor must have on staff the following number of key personnel as a minimum, each with a minimum of 5 years of related BACnet controls installation experience: Project Manager - 2, Controls Applications Engineer - 2, Programmer - 2, Installation Supervisor - 2, Controls Technician - 5.

Prefer contractor staff to include Niagara Tridium AX/N4 certified technicians.

Contractor to have experience with successful integrations of controls with Niagara Tridium systems.

Contractor to have a minimum of 3 years of installation history with the brand of controls being bid.

Contractor must have a help desk operation or staff available for phone contact 24/7 for providing technical support to university staff. Call forward and emergency service numbers are not acceptable during normal business hours.

Codes and Standards:

Electrical Standards: Provide electrical components of pneumatic control systems which have been UL-listed and labeled, and comply with NEMA standards.

NFPA Compliance: Comply with NFPA 90A "Standard for the installation of Air Conditioning and Ventilating Systems" where applicable for controls and control sequences.

Kentucky Building Code: Comply with requirements where applicable for controls.

Provide products of the temperature control system with the following agency approvals:

UL-916; Energy Management Systems
UL-873; Temperature Indication and Regulating Equipment
UL-864; Subcategories UUKL, OUXX, UDTZ; Fire Signaling and Smoke Control Systems
CSA; Canadian Standards Association
FCC, Part 15, Subpart J., Class A Computing Devices

All products shall be labeled with the appropriate approval markings. System installation shall comply with NFPA, NEMA, NEC, Local and National Codes.

SUBMITTALS:

Product Data: Submit manufacturer's technical product data for each control device furnished, indicating dimensions, capacities, performance and electrical characteristics, and material finishes, also include installation and start-up instructions.

A. Shop Drawings, Product Data, and Samples

1. Each submittal shall have a cover sheet with the following information provided: submittal ID number; date; project name, address, and title; BAS Contractor name, address and phone number; BAS Contractor project manager, quality control manager, and project engineer names and phone numbers.

2. Each submittal shall include the following information.

a. BAS riser diagram showing all DDC controllers, network repeaters, and network wiring.

b. One-line schematics and system flow diagrams showing the location of all control devices.

c. Points list for each DDC controller, including: Tag, Point Type, System Name, Object Name, Expanded ID, Display Units, Controller Type, Address, Cable Destination, Module Type, Terminal ID, Panel, Slot Number, Reference Drawing, and Cable Number. The initial shop drawing submittal for review needs to include all point names meeting the naming convention outlined in this specification for UEM approval at the shop drawing phase prior to the contractor beginning any programming.

d. Vendor’s own written description for each sequence of operations, to include the following:

- Sequences shall reference input/output and software parameters by name and description.

- The sequences of operations provided in the submittal by the BAS Contractor shall represent the detailed analysis needed to create actual programming code from the design documents.
- Points shall be referenced by name, including all software points such as programmable setpoints, range limits, time delays, and so forth.
- The sequence of operations shall cover normal operation and operation under the various alarm conditions applicable to that system.

e. Detailed Bill of Material list for each panel, identifying: quantity, part number, description, and associated options.

f. Control Damper Schedules. This spreadsheet type schedule shall include a separate line for each damper and a column for each of the damper attributes, including: Code Number, Fail Position, Damper Type, Damper Operator, Blade Type, Bearing Type, Seals, Duct Size, Damper Size, Mounting, and Actuator Type.

g. Control Valve Schedules. This spreadsheet type schedule shall include a separate line for each valve and a column for each of the valve attributes, including: Code Number, Configuration, Fail Position, Pipe Size, Valve Size, Body Configuration, Close off Pressure, Capacity, Valve CV, Calc CV, Design Pressure, Actual Pressure, and Actuator Type.

h. Cataloged cut sheets of all equipment used. This includes, but is not limited to, the following: DDC panels, peripherals, sensors, actuators, dampers, and so forth.

i. Range and scale information for all transmitters and sensors. This sheet shall clearly indicate one device and any applicable options. Where more than one device to be used is on a single sheet, submit two sheets, individually marked.

j. Hardware data sheets for all local access panels.

k. Software manuals for all applications programs to be provided as a part of the programming devices, and so forth for evaluation for compliance with the performance requirements of this Specification.

l. The controls contractor shall include their BACnet PICS and BIBB statements (as described in ASHRAE 135-2001) for each device.

3. BAS Contractor shall not order material or begin fabrication or field installation until receiving authorization to proceed in the form of an approved submittal. BAS Contractor shall be solely responsible for the removal and replacement of any item not approved by submittal at no cost to the Owner.

4. Submittal shall have approved point names.

Maintenance Data: Submit maintenance instructions and spare parts lists for each type of control device. Include that type data, product and shop drawings in maintenance manual.

Operation and Maintenance Instructions:

This contractor shall prepare an electronic Operations Manual entitled "Automatic Temperature Control and Monitoring Systems Operation and Maintenance Data." Manual shall be PDF files with separate PDFs for each of the items noted below.

Each manual shall contain the following information:

Name and address of Consulting Engineer, Contractor, and index of equipment, including vendor (name and address).

Complete brochures, descriptive data and parts list, etc., on each piece of equipment, including all approved shop drawings.

Complete maintenance and operating instructions, prepared by the manufacturer, on each major piece of equipment, including preventative maintenance instructions.

Complete shop drawing submittal on temperature and monitoring controls including control diagrams updated to reflect "as-built" conditions.

All wiring and component schematics necessary for Owner (UEM) to troubleshoot, repair and expand the system.

All manuals shall be submitted to the Engineer prior to final inspection of the building.

Provide a laminated copy mounted in a sleeve on the outside of the panels for the controls sequences pertinent to equipment supplied by that specific controls panel.

Controls Program Backup: At the end of the project, the contractor is to supply digital back-up copies of all final complete operating controls programs. These shall be delivered to UEM for archiving purposes.

DELIVERY, STORAGE AND HANDLING:

Provide factory shipping cartons for each piece of equipment and control device. Maintain cartons while shipping, storage and handling as required to prevent equipment damage and to eliminate dirt and moisture from equipment. Store equipment and materials inside and protect from weather.

PART 2 - PRODUCTS

DIRECT DIGITAL CONTROL SYSTEM

General: This specification defines the minimum hardware and performance requirements for a computer-based building automation system to be furnished and installed.

SCOPE OF WORK:

System Requirements:

Contractor shall provide all equipment, engineering and technical specialist time to check the installation required for a complete and functioning system. The contractor shall furnish and install all interconnecting system components. Components to include, but not be limited to: power line conditioners, field panels, sensors, motor starter interfaces, and any other hardware items not mentioned above but required to provide the Owner with a complete workable system.

Any feature or item necessary for complete operation, trouble-shooting, and maintenance of the system in accordance with the requirements of this specification shall be incorporated, even though that feature or item may not be specifically described herein. This shall include hardware and software.

All materials and equipment used shall be standard components, regularly manufactured for this and/or other systems and not custom designed especially for this project. All systems and components shall be thoroughly tested and proven in actual use.

Input/Output Summary:

The system as specified shall monitor, control and calculate all of the points and functions as listed in the Input/Output Summary.

System Start-Up and Acceptance:

Upon completion of the installation, the BAS Contractor shall start-up the system and perform all necessary testing and debugging operations. An acceptance test in the presence of the Owner's representative shall be performed. The vendor shall check all sensors that exhibit any problems or faulty reading. When the system performance is deemed satisfactory in whole by UEM, the system parts will be accepted for beneficial use and placed under warranty. The BAS Contractor is to be available for system commissioning at the end of the installation when requested by the Engineer and/or Owner. The contractor is to also be available for seasonal commissioning for the other seasons beyond the initial commissioning.

This Contractor shall work with the Owner (UEM), who is developing the graphics, to ensure that all points report, function and alarm as required on the BACnet head-end system. The Contractor will also work with the Project Manager or CNS/MCIS to obtain all necessary IP's and Ethernet drops needed for BACnet panel. The Owner (UEM) will assign all BACnet/IP instance numbers and all BACnet/MSTP network numbers for use by the Contractor. All BACnet/IP devices will report directly to the head-end system.

UEM will be performing their own complete point by point evaluation as part of this project, independently of the commissioning activity. This will occur during the warranty period of the project.

Facilities Management's Instruction:

The BAS Contractor shall provide two copies of an electronic version of the operator's manual describing all operating and routine procedures to be used with the system. This user's manual should contain subjects such as: standard operation, error message explanations, software usage, commands, system troubleshooting, etc. The Contractor shall also provide wiring schematics for all system components.

The BAS Contractor shall instruct the Owner's designated representatives in these procedures during the start-up and test period. The duration of the instruction period shall be no less than four (4) hours during two 2 hour sessions. (Number of hours may be adjusted to a max of 40 dependent upon the size and scope of project. For larger projects, training vouchers for instructional training at the manufacturer's facilities may be requested in lieu of on-site training.) These instructions are to be conducted during normal working hours at the Owner's convenience and are to be prearranged with the Owner. The owner can request this training any time within the one year warranty period and may request any number of classes adding up to the total number of hours. The contractor shall provide an hourly unit price for additional on-site training.

The instructions shall consist of both hands-on at the job site and classroom training at a classroom location on the University of Kentucky campus coordinated with the Project Manager and UEM.

Upon completion, the attendees shall be able to operate the system and implement system changes including start-up, boot load, add point to the data base, enter messages, and down line load field units.

Prior to the scheduling of the sessions, an agenda outlining the training topics must be submitted for approval. Agenda items shall include, but not be limited to, the following topics:

1) Explanation of control sequences. Include which sensors are used and how output device operates.
2) Explanation of control drawings and manuals, including symbols, abbreviations, and overall organization.
3) Walk-through of project to identify controller locations and general routing of network cabling.
4) Review of operation and maintenance of hardware devices including air compressor, air dryers, controllers, instruments, and sensors. Include schedule for routine maintenance.
5) Programming Application Specific Controllers
   (a) Backing up and Restoring Application Specific Programming
   (b) Adding/Deleting/Editing points on Application Specific controllers
   (c) Troubleshooting Application Specific controllers (inputs/outputs/logic/master – slave relationships/bus issues)
6) Programming Building Specific Controllers
   (a) Backing up and Restoring Building Specific Controllers Programming
   (b) Adding/Deleting/Editing points on Building Specific Controllers controllers
   (c) Troubleshooting Building Specific Controllers controllers (inputs/outputs/logic/network issues)
7) How to use tools and cables

Warranty:

The system including all hardware and software components shall be warranted for a period of one year when the system performance is deemed satisfactory in whole by UEM. The system parts will be accepted for beneficial use and placed under warranty at that time. A Certificate of Occupancy does not initiate the control system warranty. Any defects in materials and workmanship arising during this warranty period shall be corrected without cost to the Owner.

All applicable software as detailed in this specification shall be updated by the BAS Contractor free of charge during the warranty period. This will ensure that all system software will be the most up-to-date software available from the BAS Contractor.

DIRECT DIGITAL CONTROL (DDC) EQUIPMENT

System Software

All software required for monitoring, modifying, configuring and backup for the system shall be embedded in the controller and accessible via VT terminal, hyper-terminal or the web. This software shall allow any computer with access (and security) to the University's network to perform the work described above using a web browser or provided software. No software upgrades should be required unless provided at no additional cost to the customer. The software version used for installation of any new devices must either be at the current software version used on the University Facilities Management campus at the current JAVA version or the new software at the most current JAVA version must be installed on all devices and the current system prior to the installation of the new devices. All software is to also operate on the latest version of Microsoft Windows operating system. All configuration and programming tools required for the upgraded version must be provided at the time of installation.

Provide a USB, standard RS-232 9 pin female, Bluetooth, RJ11, RJ12 or RJ45 connection for on-site access.

BACnet Conformance

Building Controller shall as a minimum support MS/TP and Ethernet BACnet LAN types. It shall communicate directly via these BACnet LANs as a BACnet device and shall support simultaneous routing functions between all supported LAN types. Global controller shall be a BACnet conformance class 3 device and support all BACnet services necessary to provide the following BACnet functional groups:

1. Clock Functional Group
2. Files Functional Group
3. Reinitialize Functional Group
4. Device Communications Functional Group
5. Event Initiation Functional Group

Please refer to end of this section for a complete list of the services that must be directly supported to provide each of the functional groups listed above. All proprietary services, if used in the system, shall be thoroughly documented and provided as part of the submittal data.

Standard BACnet object types supported shall include as a minimum: Analog Value, Binary Value, Calendar, Device, File, Group, Notification Class, Program and Schedule object types. Alarms should also be setup on this system with limits. All proprietary object types, if used in the system, shall be thoroughly documented and provided as part of the submittal data.

The Building Controller shall comply with Annex J of the BACnet specification for IP connections. This device shall use Ethernet to connect to the IP internetwork. It must support interoperability on the campus area network and function as a BACnet Broadcast Management Device (BBMD) and/or a BACnet router.

Building Controller (B-BC)

General

Building Controller (B-BC) shall be minimum 16 bit microcomputer based, utilizing a multi-tasking, multi-user operating system.

The B-BC controllers shall permit the simultaneous operation of all control, communication facilities management and operator interface software, as programmed by the Contractor or User. Modification of the on-board B-BC controller database shall be performed on-line using the built-in software. Systems which require the B-BC to be removed from service while DDC control sequences are modified shall not be acceptable.

B-BC controllers shall utilize true floating point arithmetic capabilities.

All B-BC controllers shall have open licensing to connect to existing UK UEM Tridium BACnet BAS.

Databases and Memory Back-Up

All programming defining the functions to be performed by the B-BC, including but not limited to application programs and point database within each B-BC, shall be protected from loss due to power failure for a minimum of 72 hours. All database and backup shall be provided to the UK UEM Controls group.

Service Ports

B-BC controllers shall be equipped with a minimum of one operator service port for the connection of a laptop computer. The service port shall be either a built-in standard RS-232 data terminal port, USB port, CAT5 cable or RJ11/12 connection.

Connection of a service device, to a service port, shall not cause the B-BC controller to lose communications with its peers or other networked device controllers.

Display and Readout Capability

The B-BC controller shall additionally provide diagnostic LED indication of device transmit and receive data communications for all communication port and peripheral ports, normal operation, abnormal operation and control relay operation indication.

Manual/Auto Control and Notification

The B-BC controller shall provide commanded override capability from the built-in operator interface. Such overrides shall be annunciated to the head-end station. Such overrides shall be valid as long as power is applied to the controller.

Adjustments

Every control panel shall provide adjustments for the functions specified. In general, adjustments shall be provided for all setpoints used by controllers within each control panel. In addition, adjustments shall be provided for throttling ranges, mixed air damper minimum positions, or other items as specified. Adjustments shall be integral to each individual B-BC. The built-in operator interfaces shall allow the easy execution of the adjustment through named identifiers within the B-BC. From a single B-BC user interface, any other B-BC shall be accessible and full adjustment capabilities shall be provided.

B-BC Naming Convention

B-BC devices shall be named using the following naming convention:

> *B-BC devices shall be named using the following format:*
> *BuildingName_BuildingNumber_Floor_RoomNumber_B-BC Device Type* OR
> *BuidlingNumber_BuildingName_Floor_RoomNumber_B-BC Device Type*
>
> *All B-AAC points shall be named using the following format:*
> *Building_Floor_RoomNumber_Device Type_Equipment ShortName_Function*

Examples:

A B-BC device located in the Pavilion HA mechanical room HA4001 would be named as follows:

PAVHA_0293_04_HA4001_JACE

An exhaust fan status point for a fan in Pavilion HA mechanical room HA3001 fed directly from the above panel would be named as follows:

PAVHA_03_HA3001_HVA_EF1_STAT

For function short names and building short names and numbers, contact the University Controls Engineering Department.

Advanced Application Controller (B-AAC)

General

Controls shall be microprocessor based, Advanced Application Controllers (B-AAC's). B-AAC's shall be provided for Air Handling Units, packaged Rooftops, primary and secondary pumping loop systems and other applications as shown on the drawings. B-AAC's shall be based on a minimum 16 bit microprocessor working from software program memory which is physically located in the B-AAC. The application control program shall be resident within the same enclosure as the input/output circuitry which translates the sensor signals. All input/output signal conversion shall be performed through a minimum of a 10 bit A to D converter. All input points shall be universal in nature allowing their individual function definition to be assigned through the application software. All unused input points must be available as universally definable at the discretion of the owner. If the input points are not fully universal in nature, unused points must be equal in quantity between Analog Inputs and Digital Inputs.

All B-AAC controllers shall have open licensing to connect to existing UK UEM Tridium BACnet BAS.

Contractor shall provide a minimum of one B-AAC controller per air handling or mechanical system as shown on the drawings.

The BAS contractor shall provide and field install all B-AAC's specified under this section. Mechanical equipment manufacturers desiring to provide B-AAC' type controls as factory mounted equipment, shall provide a separate bid for their products less all controls, actuators, valve assemblies and sensors, which are specified to be provided by the BAS/Temperature control contractor.

All input/output signals shall be directly hardwired to the B-AAC. Troubleshooting of input/output signals shall be easily executed with a volt-ohm meter (VOM). As a result of this intent, it is specified that power line carrier systems, or other systems which command multiple outputs over a single pair of wires, shall not be utilized.

B-AAC's shall be in continuous direct communication with the network which forms the facility wide Building Automation System. The B-AAC's shall communicate with the B-BC at a minimum baud rate of 9,600 baud.

Non-Volatile Memory

All control sequences programmed into the B-BC shall be stored in non-volatile memory, which is not dependent upon the presence of a battery, to be retained. Power failures shall not cause the GDC memory to be lost, nor shall there be any need for batteries to be recharged or replaced to maintain the integrity of the controller database. The B-BC shall allow for the creation of unique application control sequences. Systems that only allow selection of sequences from a library or table are not acceptable.

All control sequences shall be fully programmable at the B-AAC, allowing for the creation and editing of an application control sequence, while at the unit.

The B-AAC shall be provided with an interface port (standard RS232 data terminal port or USB port) for a laptop computer. The interface port shall allow the laptop to have full functionality as described above. From the interface port or *network terminal, the laptop shall be able to directly access any B-AAC or B-ASC in the* network.

The B-AAC shall provide an input/output point trending utility that is capable of accumulating 48 analog point samples and 10 digital point samples, per Input/Output point. Each sample shall be taken on a user defined interval, ranging from 1 second to 255 hours per sample. The digital readings shall be on a change of state occurrence for the digital points. All samples shall be recorded with the engineering units for the value, along with a time and date identifier for each sample taken. The samples shall be protected against loss due to power interruptions through a battery or capacitor backup method for a minimum of 30 days.

Systems unable to provide the above capability shall provide for the individual Input/Output point trending at the B-BC. Specifics as to how each B-AAC point will be trended, at the B-BC, shall be provided in the submittal documents. Included in the explanation shall be the sample intervals, the memory allocation in the B-BC and the number of B-AAC's per B-BC that can be expected.

The B-AAC shall provide LED indication of transmit/receive communications performance, as well as for the proper/improper operation of the controller itself.

The B-AAC shall be provided with a battery backed time clock that is capable of maintaining the time of day and calendar for up to thirty days, upon loss of power to the B-AAC, without loss of setting. The battery for the time clock shall be replaceable by the customer. The B-AAC shall be provided with integral time schedules; as a minimum, two seven day schedules with eight on/off periods per day shall be provided. Holiday override of weekly schedules shall be provided for pre-scheduling of holidays, for the year in advance.

Controller Location

To simplify controls and mechanical service troubleshooting, the B-AAC shall be capable of being mounted directly in or on the controls compartment of the air handling system. The B-AAC shall be housed in a NEMA 1 enclosure to accommodate direct mounting on the equipment to be controlled. The B-AAC shall be constructed in a modular orientation such that service of the failed components can be done quickly and easily. The modular construction should limit the quantities of printed circuit boards to a maximum of two. All logic, control system, power supply and input/output circuitry shall be contained on a single plug-in circuit board. When required to replace a printed circuit board, it shall not be necessary to disconnect any field wiring. This shall allow all controls maintenance and troubleshooting to be made while at the air handling unit. The B-AAC shall be directly wired to sensory devices, staging relays or modulating valves for heating and cooling.

Every controller and control panel shall be labeled with a lamacoid plate permanently secured to the device. Sticky tape or glued labels are not acceptable. The labeling shall describe the device and include related information such as MAC address, IP address, BACnet Instance numbers, etc.

All power feeds shall be clearly identified and shall include panel number, breaker and electrical panel location if not in the same room.

For compatibility to the environment of the air handling unit, B-AAC's shall have wide ambient ratings. B-AAC's shall be rated for service from -40 DegF (Degrees Fahrenheit) to 140 DegF.

Contractor shall submit description of location of B-AAC's on all mechanical and air handling equipment.

B-AAC Naming Convention

B-AAC devices shall be named using the following naming convention:

> *B-AAC devices shall be named using the following format:*
> *Building_Floor_RoomNumber_B-AAC Device Type_Equipment Short Name*
>
> *All B-AAC points shall be named using the following format:*
> *Function*

Examples:

An Air Handler controller in the Pavilion HA mechanical room HA4001 for AHU7 would be named as follows:

PAVHA_04_HA4001_HVA_AHU7

The mixed air temperature point for the above system would be named as follows:

MAT

Therefore, when this point is learned, the entire point name will be:

PAVHA_04_HA4001_HVA_AHU7_MAT

For function short names and building short names and numbers, contact the University Controls Engineering Department.

Application Specific Controller (B-ASC)

General

Controls shall be microprocessor based Application Specific Controller (B-ASC). B-ASC's shall be provided for Unit Ventilators, Fan Coils, Heat Pumps and other applications as shown on the drawings. B-ASC's shall be based on a minimum 16 bit microprocessor working from software program memory which is physically located in the B-ASC. The application control program shall be resident within the same enclosure as the input/output circuitry which translates the sensor signals. All input/output signal conversion shall be performed through a minimum of a 10 bit A to D converter.

Contractor shall provide a minimum of one B-ASC controller per unitary system as shown on the drawings.

The BAS contractor shall provide and install all B-ASC's specified under this section.

All input/output signals shall be directly hardwired to the B-ASC. Troubleshooting of input/output signals shall be easily executed with a volt-ohm meter (VOM). As a result of this intent, it is specified that power line carrier systems, or other systems which command multiple outputs over a single pair of wires, shall not be utilized.

B-ASC's shall be in continuous, direct communication with the network which forms the facility wide building automation system. The B-ASC's shall communicate with the B-BC at a baud rate of no less than 38,400 baud.

Non-Volatile Memory

All control sequences programmed into the B-ASC shall be stored in non-volatile memory, which is not dependent upon the presence of a battery, to be retained. Power failures shall not cause the B-ASC memory to be lost, nor shall there be any need for batteries to be recharged or replaced to maintain the integrity of the controller database. The B-ASC shall allow for the creation of unique application control sequences.

The B-ASC shall be provided with the ability to interface with a laptop computer. The interface port shall be provided at the wall sensor or within the unitary equipment. Connection to the wall sensor must be a standard RJ-45 or USB port.

The B-ASC shall provide an input/output point trending utility that is capable of accumulating 48 analog point samples and 10 digital point samples per Input/Output point. Each sample shall be taken on a user defined interval, ranging from 1 second to 255 hours per sample. The digital readings shall be on a change of state occurrence for the digital points. All samples shall be recorded with the engineering units for the value, along with a time and date identifier for each sample taken.

Systems unable to provide the above capability shall provide for the individual input/output point trending at the B-BC. Specifics as to how each B-ASC point will be trended, at the B-BC, shall be provided in the submittal documents. Included in the explanation shall be the sample intervals, the memory allocation in the B-BC and the number of B-ASC's per B-BC that can be expected.

Controller Location

To simplify controls and mechanical service troubleshooting, the B-ASC shall be mounted directly in the controls compartment of the unitary system. The B-ASC shall be provided with a sheet metal or polymeric enclosure that is constructed of material allowing for the direct mounting within the primary air stream, as defined by UL-465. The direct mounting shall allow all controls maintenance and troubleshooting to be made while at the unitary equipment. The B-ASC shall be directly wired to sensory devices, staging relays or modulating valves for heating and cooling.

For compatibility to the environment of the unitary equipment, B-ASC shall have wide ambient ratings. B-ASC's shall be rated for service from 32 DegF (Degrees Fahrenheit) to 140 DegF.

Contractor shall submit description of location of B-ASC's on all mechanical and unitary equipment.

B-ASC Naming Convention

B-ASC devices shall be named using the following naming convention:

B-ASC devices shall be named using the following format:
Building_Floor_RoomNumber_B-ASC Device Type

All B-ASC points shall be named using the following format:
Function

Examples:

A VAV controller in the Pavilion HA room HA498 would be named as follows:

PAVHA_04_HA498_VAV

The discharge air temperature point for the above room would be named as follows:

DAT

Therefore, when this point is learned, the entire point name will be:

PAVHA_04_HA498_VAV_DAT

For function short names and building short names and numbers, contact the University Controls Engineering Department.

CONTROL PANELS

Panelboard shall contain all instruments and accessories. Provide each item of equipment with an engraved nameplate. Panelboard shall be wall-mounted or stand-mounted and shall be completely enclosed.

As far as is practical, the control components for each system shall be grouped. Provide each group of components with identification.

The entire panelboard shall be pre-wired and brought to a main terminal strip. All relays, switches, etc., shall be installed, furnished and wired on panelboard. Clearly mark each terminal strip as to which wire from which component is to be connected.

Fabricate panels of 0.06-inch- (1.5-mm-) thick, furniture-quality steel or extruded-aluminum alloy, totally enclosed, with hinged doors and keyed lock, with manufacturer's standard shop-painted finish and color.

Panel-Mounted Equipment: Temperature and humidity controllers, relays, and automatic switches; except safety devices. Mount devices with adjustments accessible through front of panel.

Door-Mounted Equipment: Flush-mount (on hinged door) manual switches, including damper-positioning switches, changeover switches, thermometers, and gages.

Graphics: Color-coded graphic, laminated-plastic displays on doors, schematically showing system being controlled, with protective, clear plastic sheet bonded to entire door.

SENSORS

Electronic Sensors used in air ducts or liquid lines shall utilize non-adjustable RTD or thermostat sensing elements with + or -0.36°F, accuracy and stability of at least + or -0.05°F per year. All sensors used in liquid line shall be provided with separable stainless steel immersion wells. Averaging sensors shall be a minimum of five (5) feet in length, and shall be installed in such a manner so as to sense representative sample of the medium being controlled.

Equipment Operation Sensors: As follows:

Status Inputs for Fans: Differential-pressure switch with adjustable range set to 175 percent of rated fan static pressure. A hawkeye sensor should also be provided so that the owner knows if belts are lost or fans are running backwards.

Status Inputs for Electric Motors: Current-sensing relay with current transformers, adjustable and set to 175 percent of rated motor current.

Digital-to-Pneumatic Transducers: Convert plus or minus 12-V dc pulse-width-modulation outputs (preference is 4-20mA or 0-10 Volts), or continuous proportional current or voltage to 0 to 20 psi (0 to 138 kPa).

Damper Position Indication: Potentiometer mounted in enclosure with adjustable crank-arm assembly connected to damper to transmit 0 to 100 percent damper travel.

SENSOR INPUT AND OUTPUT DEVICES:

The following sensors and devices, or their equivalents, shall be considered acceptable. Other sensors and devices required for this specification are outlined in their respective subsystem.

Analog sensing elements for remote indication shall be independent of local pneumatic sensors used for local control loops.

System Accuracy: The system shall maintain an end-to-end accuracy for one year from sensor to operator's console display for the application specified.

STANDARD	Temperature Sensors
TYPE	Electronic
APPLICATION	BAS, HVAC, BTU, Boiler Control
STANDARD	100 or 1000 ohm platinum wire wound RTD element Standard J (3 wire) configuration European curve, Alpha = .00385 Ohms/Ohm/deg.C., meets DIN SID 43760 Wire in conduit

MECHANICAL 1/4" stainless steel sheath

SPACE TEMPERATURE Sensor housing to be similar in appearance to existing thermostats except that thermometers are not required. Similarity to be Owner's decision. Locate on an outside wall if possible.

DUCT TEMPERATURE Standard lengths -- 5.5", 11.5" and 17.5"

Other lengths with owner's written approval.

Locate in central area of airstream at minimum of 18” from reheat coil.

1/2" NPT mounting thread and flange and conduit connection.

Glass encapsulated element unless otherwise approved.

THERMOWELL Drilled brass or stainless steel or brass fitting with stainless steel sheath built-up well with Owner approval.

Glass encapsulated element unless otherwise approved.

3/4" process connection with drilled wells.

1/2" NPT process connection on built-up wells.

Insertion into measured medium - 1" + 1/2" diameter of pipe.

Cast iron connector head - 1/2" NPT process connection and conduit connection.

Rated thermowell pressure = 250 psi.

ELEMENT ACCURACY must meet .1% DIN and the DIN 43760 standard.

OVERALL ACCURACY + 1 deg.F. General duct, space and thermowell temperatures.
+ .75 deg.F. for thermowell ele. on 4" or larger pipes.
+ .5 deg.F. for thermowell ele. on 8" or larger pipes.

OVERALL RANGE -20% to l20% of possible operating conditions.

GENERAL NOTE If wires from RTD probe to DGP are to be more than 200 feet long, provide extra large cast iron connector head (nominal size 2-11/16 x 1/4) or junction box to accommodate a resistance to 4-20 mA convertor transmitter.

STANDARD Pressure Sensor

TYPE Electronic with LVDT element.

APPLICATION 4-20 mA Output (2 wire)
Wire in conduit
Input voltage 10-35 volts DC
Loop resistance greater than or equal to 500 ohms

MECHANICAL	Linear variable differential transformer (LVDT) element	
	Allowable Standard Ranges	0- 30 PSI 0-100 PSI 0-200 PSI
	Other ranges with Owner written approval	
	1/2" NPT input thread and conduit connection.	
	Provide differential inputs unless otherwise approved.	
	Provide an air filter on unused differential ports.	
	Provide with a NEMA 4 watertight enclosure unless otherwise approved.	
	Min. rate pressure - l50% FS proof and 450 PSI static.	

OVERALL ACCURACY + 0.5% F.S. including Linearity, hysteresis and repeatability.

ACCURACY NOTE: If pressure transducer is used to calculate flow with a pilot tube, then the accuracy of the pressure sensor should be dictated by the overall accuracy requirement of the system and would probably require a high accuracy sensor.

This section covers all new transducers provided. All new transducers provided shall be of the following type:

	INPUT	OUTPUT
l.	Temperature (deg.F.)	4-20 mA, 2 wire
	Temperature (deg.F.)	100 ohm platinum wire RTD
2.	Pressure	4-20 mA, 2 wire
3.	Flow Instantaneous	4-20 mA, 2 wire
4.	Flow Integrated	Pulse 10 PPS Max A25 msec open (min.) 40 msec closed (min.)
5.	KW Instantaneous	4-20 mA, 2 wire
6.	KWH - Integrated	Pulse – 10 PPS Max A25 msec open (min.) 40 msec closed (min.)

Digital inputs from devices with isolated, dry type contacts (no grounds, no voltage) of either normally open (N.O.) or normally closed (N.C.) configuration. Live contact inputs, those that have voltage present, shall be provided with isolating devices to meet dry contact requirement.

THERMOSTATS:

Room Thermostats: Provide room thermostats that work in conjunction with the B-AAC and B-ASC terminal unit controllers. Thermostats shall have visible thermometers, setpoint indication and exposed setpoint adjustment in all areas except public spaces. Thermostats are to have push buttons on the front face for adjusting the temperature setpoints. Thermostats are to have no doors.

In cases where a single room sensor is to be shared by multiple controllers the slave box reheat control valves and dampers shall be individually controlled to track the discharge temperature of the master unit. The Master shall be identified locally and on the FMS.

An RJ-11 type connection to serial port shall allow a local portable operator or programmer's terminal to access all program blocks and attributes for complete programmability.

Room Thermostat Accessories: As follows:

Insulating Bases: For all thermostat installations.

Thermostat Guards: Locking transparent-plastic mounted on separate base.

Adjusting Key: As required for device.

Aspirating Boxes: Where indicated for thermostats requiring flush installation.

DAMPERS:

Provide automatic control dampers as indicated, with damper frames not less than 13-gage galvanized steel. Provide mounting holes for enclosed duct mounting. Provide damper blades not less than formed 16-gage galvanized steel, with maximum blade width of 8".

Secure blades to 1/2" diameter zinc-plated axles using zinc-plated hardware. Seal off against spring stainless steel blade bearings. Provide blade bearings of nylon and provide thrust bearings at each end of every blade. Construct blade linkage hardware of zinc-plated steel and brass. Submit leakage and flow characteristics plus size schedule for controlled dampers.

Do not exceed maximum 48"x48" damper size. For sizes larger then this maximum in either dimension, use multiple dampers with a separate operator for each damper. Do not link separate dampers together.

Operating Temperature Range: From -20 degrees to 200 degrees F. (-29 degrees to 93 degrees C.). The occupant shall have an operation local range of 68 degrees and 74 degrees on rooms with Occupancy sensors.

For standard applications as indicated, provide parallel or opposed blade design (as selected by manufacturer's sizing techniques) with inflatable steel blade edging, or replaceable rubber seals, rated for leakage less than 10 CFM/sq.ft. of damper area, at differential pressure of 4" w.g. when damper is being held by torque of 50 inch-pounds.

Smoke Dampers: Provide smoke and combination fire/smoke dampers in accordance with applicable requirements of Specification Section "Ductwork Accessories".

ACTUATORS:

Electric Valve and Damper Motors: Size each motor to operate dampers or valves with sufficient reserve power to provide smooth modulating action or 2-position action as specified.

For reheat coils in branch ductwork and heating coils for air terminal units and fan terminal units, provide non-spring return, fully proportional, floating valve actuators.

For all other applications, provide permanent split-capacitor or shaded pole type motors with gear trains completely oil-immersed and sealed. Equip spring-return motors, with integral spiral-spring mechanism. Furnish entire spring mechanism in housings designed for easy removal for service or adjustment of limit switches, auxiliary switches, or feedback potentiometer.

Equip motors for outdoor locations and for outside air intakes with "O ring" gaskets designed to make motors completely weatherproof, and equip with internal heaters to permit normal operation at -40 degrees F. (-40 degrees C.)

Provide separate motor for each outside air, return air and exhaust air damper. Do not link dampers with different functions together on one damper motor.

Provide separate motor for each damper when overall damper size exceeds 48" in either dimension. Do not link different dampers together on one damper motor.

Binary backed-up motors are not acceptable.

MISCELLANEOUS:

Wells for Pipe Mounted Sensor: Wells shall have minimum working pressure of 150 WOG psig. Wells shall be brass or stainless steel.

Lightning Protection: All electric/electronic equipment supplied must be internally or externally lightning/transient surge voltage protected on all external power feeder and input/output connections which are subject to surge voltage transients. Provide high speed clamping elements which meet IEEE. STD. 472 (SWC) on all digital or analog date channels.

Pressure Instruments:

> Differential Pressure and Pressure Sensors: Sensors shall have 4-20 mA output proportional signal with provisions for field checking. Sensors shall withstand up to 150% of rated pressure, without damaging device. Accuracy shall be within 2% of full scale.
>
> Pressure Switches: Pressure switches shall have repetitive accuracy of +2% of range and withstand up to 150% of rated pressure. Sensors shall be diaphragm or bourdon tube design. Switch operation shall be adjustable over operating pressure range. Switch shall have application rated Form C, snap-acting, self-wiping contact of platinum alloy, silver alloy or gold plating.

Current Sensing Relays: Relays shall monitor status of motor loads. Switch shall have self-wiping, snap-acting Form C contacts rated for application. Setpoint of contact operation shall be field adjustable.

Low Voltage Wiring: Control wiring for analog functions shall be 18 AWG minimum with 600 volt insulation, twisted and shielded, 2 or 3 wire to match analog function hardware.

Low Voltage Wiring: Wiring for electric or electronic circuits less than 25 volts shall be cabling manufactured for express use in air plenums. The plenum cable shall be 24 gauge or larger as required, tinned copper, Teflon insulated, twisted pairs, shielded or unshielded, as required, a color coded, overall tape wrap, with transparent Teflon jacket, 150V., NEC725, Class 2 classified for use in air plenum non-conduit signaling application.

Manual Override Switches: In case of failure of the DDC system, provide override switches to operate fans, pumps, air handling units, cooling tower, heat exchangers, etc., manually in local interface control panel. Also for temperature and pressure control provide switches to allow supply temperatures, water temperatures, supply air pressure and fans to be manually regulated. All switches shall be located in locked panel to prevent unauthorized use of the manual override switches.

PART 3 - EXECUTION

INSPECTION:

Examine areas and conditions under which control systems are to be installed. Do not proceed with work until unsatisfactory conditions have been corrected in manner acceptable to Installer.

INSTALLATION OF AUTOMATIC TEMPERATURE CONTROLS

General: Install systems and materials in accordance with manufacturer's instructions, roughing-in drawings and details shown on the Drawings.

CONTROL WIRING:

Contact the project manager for all required Ethernet connections for this project.

Install control wiring, without splices between terminal points, color-coded. Install in neat workmanlike manner, securely fastened. Install in accordance with National Electrical Code. Install wiring in electrical conduit in all areas. All controls conduit shall be green in color.

Conceal conduit, except in mechanical rooms and areas where other conduit and piping are exposed.

Install all control wiring with color-coded wire in ¾” minimum size conduit. Wire gauge to be in accordance with National Electrical Code.

Connect electrical components to wiring systems and to ground as indicated and instructed by manufacturer. Tighten connectors and terminals, including screws and bolts, according to equipment manufacturer's published torque-tightening values for equipment connectors. Where manufacturer's torqueing requirements are not indicated, tighten connectors and terminals according to tightening requirements specified in UL 486A.

POWER WIRING:

Provide power wiring and conduit to air terminal units (if required) and to smoke dampers and combination fire/smoke dampers and their damper motors.

Furnish and install power cabling and conduit for temperature controls panels and equipment from emergency power panels. Each temperature control panel shall be connected to a separate circuit. Conduits shall connect to panels at the locations directed by the Contractor under Division 26. Final connection in the power panels shall be by Temperature Control Contractor in coordination with Division 26 Contractor.

MISCELLANEOUS:

Software Programming: All software programs shall be programmed by this Contractor.

Installation of Mechanical Devices: Refer to Mechanical Division sections for installation of valve bodies, control wells and dampers; not work of this section.

ADJUSTMENT AND SERVICE:

After completion of the installation, the automatic temperature control manufacturer shall regulate and adjust all thermostats, control valves, motors, and other equipment provided under his contract and shall place them in complete operating condition, subject to approval by the Engineer and Owner.

This shall include but not be limited to “tuning” of all control systems. Systems shall be tuned for decaying wave response and minimal overshoot of setpoint. Contractor is to not leave any system in an Auto Tune mode.

Room temperature controls shall have one temperature setpoint with less than a 0.5˚F between calculated heating and cooling temperatures.

This Contractor shall work with Balancing Contractor to provide verification of CFM reading from the DDC terminal unit controllers.

Final adjustment shall be performed by specially trained personnel in direct employ of manufacturer of primary temperature control system.

After completion of installation, perform the following:

Installation.
Check proper installation and connection of each control device.
Verify electric power.
Verify each sensor and actuator connection to field computer.

Field Computer Operation.
Point Test.
- check of wiring of each sensor and actuator end-to-end
- verify calibration of each sensor.
- verify manual operation of each actuator.

Local loop control.
- bring each local loop under control.
- check response to upset, change in setpoint.
- check full and partial load operation.

Supervisory functions.
- verify time clock schedules.
- verify reset control.

Verify communication with each field device.
- perform end-to-end sensor and actuator checks.
- verify that the database is correct.

Test other software.
Trend Logging.
Report Generation.
Remote Access.
System Documentation.

Verify proper operation of every control point in the presence of the Engineer. Include point-by-point checkout.

The control manufacturer shall provide a period of free service extending through one complete heating season and one complete cooling season, after acceptance of the control system, and shall report the condition of the control equipment to the Owner and the Architect.

PART 4 - SEQUENCE OF OPERATION:

(The consultant is responsible for providing the appropriate Sequences of Operation required by the project. Following are some guidelines for use in the development of the drawings and specifications as they relate to University projects.)

AIR HANDLING UNITS (AHU)

For all AHUs, the following is a minimum points list that is required for each unit:
Supply discharge temperature
Return temperature
Mixed Air temperature

Preheat temperature
OA temperature
Damper positions – OA, RA, MA
Pressures – Discharge Static, 2/3 Static, Return Static
Fan Commands & Statuses of all fans – Supply, Return and Exhaust
Heating & Cooling Coil Valve Commands
All VFD information – Fans and Pumps
Pump Commands and Status
CFM readings – Discharge, Return, Outside Air
Humidifier Commands and Humidity points
Setpoints for temperature and pressures
Filter pressure differentials

Related to freezestat operation for all AHUs, the following sequence needs to be added to each sequence: *Upon tripping of the freezestat, the heating control valve is to modulate to maintain a heating plenum space temperature of 3 degrees F (adj) less than the specific unit DAT setpoint. Example: For unit with 55 DAT setpoint, plenum temperature is to control to 52 degrees.*

All AHUs shall be programmed to restart on their own without any software lockout reset required.

Reference University Standard 230553S02 for the AHU naming convention.

CHILLED WATER SYSTEMS

For buildings and installations that require a chilled water system decoupled loop, refer to University Standard 236000S01.

ROOM TERMINAL HVAC

For all rooms, provide the following points as a minimum:
VAV supply and/or return damper position
Heating valve position
CFM reading
Room DAT
Room temperature
Room temperature setpoint
Radiant Heat valve position (if applicable)

For any space that may be unoccupied during periods of operation, consideration needs to be given in the design of the space to the University Energy Guidelines.

HYDRONIC WATER SYSTEMS

All hydronic water systems shall be developed using an outside air temperature reset schedule developed for each particular building.

BACnet Protocol Implementation Conformance Statement:
The controls contractor shall include their BACnet PICS and BIBB statements (as described in ASHRAE 135-2001) for their BACnet Interface with their shop drawings. The interface shall comply with the following as a minimum.

Vendor Name: Tridium, Inc.
Product Family: Niagara Framework, including N4 Web Supervisor, JACE 6XX at Release 3.8, JACE 8xxx at release 4.6 or greater using the most current version of JAVA or HTML 5. All control work

associated with this project must be fully compatible with this version of Tridium such that all alarms, points, etc. communicate and clear alarms seamlessly with the existing system.
Description: This product family provides bi-directional communication between the Tridium Niagara Framework and a BACnet system operating at BACnet Conformance Class 3, over Ethernet media.

BACnet Protocols are documented in Appendices A, B & C.

REQUIRED SUBMITTALS:

The following chart is supplied for the benefit of the Owner, Architect, Engineer and contractor to assure a complete submission of required information. It is a reference listing of documents required by the Specifications under this Section. Refer to Specifications Section - General Provisions for the general requirements of submittals.

ITEM	**SHOP DRAWING**	**M&O MANUAL**	**PARTS LIST**	**WRITTEN DESCRIPTION**
Control equipment	x	x	x	
Control systems	x			
Control sequence				x
“As-builts” drawings	x	x	x	
Frequency drives	x	x	x	
Air terminal units	x	x	x	
I/O Summary Charts	x			

Print and Save Excel I/O Summary Sheet in Spec Directory (Add general IO Point list)

Appendix A – Vykon Niagara Compatibility Statement (NiCS)

VYKON Niagara^{AX} Compatibility Statement (NiCS) Includes all VYKON branded JACE and Software Products

VYKON Niagara^{AX} Compatibility Statement (NiCS)

Includes all VYKON branded JACE and Software Products

The following information describes Tridium's VYKON branded Niagara^{AX} product licensing.

Tridium's VYKON AX branded products utilizes an open access licensing procedure. VYKON AX branded products can be connected to and managed by any Niagara based tools or systems without the need to modify the license. This means the end user does not have to authorize changes to a VYKON AX license for another systems integrator to gain access to the system. The end user does need to have the necessary user names and passwords installed by the original system integrator so they can be used by another Niagara trained system integrator.

The following is an explanation of the VYKON licensing scheme.

BrandID

Every licensed station and tool has a Brand Identifier (BrandID). This field holds a text descriptor that the OEM chooses as the identifier for its product line. Each station or tool can have only one BrandID entry.

Tridium's VYKON products have the following:

BrandID – VYKON

Station Compatibility In

This field is a list of brands that this local station will allow Niagara AX data to come in from. Simply stated from the point of view of a JACE, "this is the list of brands that can I can accept data from". Tridium's VYKON products contain:

Station Compatibility In – All (In the actual license ALL is define by an *)

Note: The compatibility fields can contain: a single brand "ABC", a list of multiple brands "ABC, XYZ", no brand

"None" or all brands "All".

Station Compatibility Out

This field is a list of brands that this local station will allow Niagara AX data to be shared with. Simply stated, "This is the list of brands that I can share data with". Tridium's VYKON products contain:

Station Compatibility Out – All

Tool Compatibility In

This field is a list of brands that this station will allow to be connected to it for engineering of its application. Simply stated, "This is the list of brands that can engineer me". Tridium's VYKON products contain:

Tool Compatibility In – All

Tool Compatibility Out

This field is a list of brands that this tool is allowed to connect to and engineer. Simply stated, "This is the list of brands that I can engineer". Tridium's VYKON products contain:

Tool Compatibility Out – All

As long as VYKON branded products are purchased by the end user any Tridium Certified (TCP) system integrator can provide support for the end user without the need for the owner to be involved in the licensing process. For more information on Niagara Connectivity and Security visit our website library at: http://www.vykon.com/cs/library/white_papers

Management Contacts:
Scott Boehm
Director, VYKON Automation Energy Security
Sboehm@tridium.com

Ed Merwin
Director, VYKON Automation Energy Security
Ed.merwin@tridium.com

3951 Westerre Parkway
Suite 350
Richmond, VA 23233
804-747-4771

www.vykon.com

JACE, AX Supervisor, and Niagara^AX Framework are trademarks of Tridium, Inc. All specifications subject to change without notice or liability to provide changes to prior purchasers. Information and specifications published here are current as of the date of publication of this document. Tridium, Inc., reserves the right to change or modify specifications without prior notice. The latest product specifications can be found by contacting our corporate headquarters, Richmond, Virginia. Products or features contained herein may be covered by one or more U.S. or foreign patents.

V-NICS-092009

Appendix B – Tridium Niagara 3.8 BACnet PICS

TRIDIUM
8951 Westerre Parkway, Suite 350
Richmond, Virginia 23233 USA
1.804.747.4771 Phone
1.804.747.5204 Fax

TRIDIUM NIAGARA^{AX} 3.8
BACnet PICS

BACnet Protocol Implementation Conformance Statement

Date: August 31, 2016
Vendor Name: Tridium
Product Name: Niagara AX BACnet Integration
Product Model Number: Tridium JACE models
Application Software Version: 3.8.112 or higher
Firmware Revision: 3.8.112.1 or higher
BACnet Protocol Revision: 7

Product Description:
Niagara AX provides the ability to view, monitor, and control BACnet devices over IP, raw Ethernet, or MS/TP media. Devices, points, schedules, alarms, and logs can be learned and managed from Niagara AX. In addition, Niagara points, schedules, histories, and alarming can be exposed to BACnet for monitor and control by foreign BACnet clients.

BACnet Standardized Device Profile (Annex L):

☐ **BACnet Advanced Operator Workstation (B-AWS)**
☐ **BACnet Operator Workstation (B-OWS)**
☐ **BACnet Operator Display (B-OD)**
☒ **BACnet Building Controller (B-BC)**
☐ **BACnet Advanced Application Controller (B-AAC)**
☐ **BACnet Application Specific Controller (B-ASC)**
☐ **BACnet Smart Sensor (B-SS)**
☐ **BACnet Smart Actuator (B-SA)**

TRIDIUM
3951 Westerre Parkway, Suite 350
Richmond, Virginia 23233 USA
1.804.747.4771 Phone
1.804.747.5204 Fax

Powered by niagara AX FRAMEWORK

Additional BACnet Interoperability Building Blocks Supported (Annex K):

Data Sharing DS-RP-A, B DS-RPM-A, B DS-WP-A, B DS-WPM-A, B DS-COV-A, B DS-COVU-A, B DS-V-A DS-M-A DS-COVP-B	**Device & Network Management** DM-DDB-A, B DM-DOB-A, B DM-DCC-B DM-RD-B DM-TS-B DM-UTC-B DM-LM-A, B DM-BR-B DM-ANM-A DM-ADM-A DM-ATS-A DM-MTS-A
Alarm & Event Management AE-N-A, -I-B AE-ACK-A, B AE-ASUM-B AE-ESUM-B AE-INFO-B AE-VN-A AE-VM-A	**Trending** T-VMT-A, I-B, -E-B T-ATR-A, B T-V-A
Scheduling SCHED-A, I-B, -E-B SCHED-VM-A SCHED-WS-I-B	**Network Management** NM-CE-A

TRIDIUM
3951 Westerre Parkway, Suite 350
Richmond, Virginia 23233 USA
1.804.747.4771 Phone
1.804.747.5204 Fax

Segmentation Capability:

Feature	Supported	Window size
Transmit Segmented Messages	yes	10
Receive Segmented Messages	yes	any

Standard Object Types Supported:

- The CreateObject and DeleteObject services are not supported, so no objects are dynamically creatable or deletable through BACnet service requests, although these objects are dynamically creatable and deletable through Niagara.
- No general range restrictions exist; however, certain specific applications may have specific range restrictions.
- All potentially available properties are listed for each object type.
- Optional properties are listed in *italics*. Not all instances support all optional properties.
- Writable properties are listed in **bold**. Any range limitations are expressed in parentheses following the property name.

Notes from Table

1. The File_Size property of File objects is only writable if the underlying system file is changeable.
2. The Setpoint property of Loop objects is writable only if the setpoint is not linked from within Niagara.
3. The Recipient_List property of the Notification Class object will maintain entries that are internally configured within Niagara.
4. The List_Of_Object_Property_References property of the Schedule object will maintain entries that are internally configured within Niagara.
5. The Priority_For_Writing property of Schedule objects is not important for internal Niagara operation, as the priority at which a point is commanded is determined by the input to which the Schedule output is linked.
6. These Trend Log object properties are not writable if the backing history for the exported Trend Log is a Niagara-generated history. If the history is created as a BACnet Trend Log, then they are writable.
7. Trend Logs in Niagara use internal triggering and are either COV or Interval. So the Log_Interval property cannot be written from BACnet.

TRIDIUM
3951 Westerre Parkway, Suite 350
Richmond, Virginia 23233 USA
1.804.747.4771 Phone
1.804.747.5204 Fax

Powered by niagara AX FRAMEWORK

Object Type	Properties	
Analog Input	Object_Identifier **Object_Name** Object_Type Present_Value ***Description*** *Device_Type* Status_Flags Event_State *Reliability* **Out_Of_Service** Units *Min_Pres_Value* *Max_Pres_Value*	*Resolution* ***COV_Increment*** ***Time_Delay*** ***Notification_Class*** ***High_Limit*** ***Low_Limit*** ***Deadband*** ***Limit_Enable*** *Event_Enable* *Acked_Transitions* ***Notify_Type*** *Event_Time_Stamps*
Analog Output	Object_Identifier **Object_Name** Object_Type Present_Value ***Description*** *Device_Type* Status_Flags Event_State *Reliability* **Out_Of_Service** Units *Min_Pres_Value* *Max_Pres_Value* *Resolution*	Priority_Array **Relinquish_Default** ***COV_Increment*** ***Time_Delay*** ***Notification_Class*** ***High_Limit*** ***Low_Limit*** ***Deadband*** ***Limit_Enable*** *Event_Enable* *Acked_Transitions* ***Notify_Type*** *Event_Time_Stamps*
Analog Value	Object_Identifier **Object_Name** Object_Type Present_Value ***Description*** Status_Flags Event_State *Reliability* **Out_Of_Service** Units *Priority_Array* ***Relinquish_Default***	***COV_Increment*** ***Time_Delay*** ***Notification_Class*** ***High_Limit*** ***Low_Limit*** ***Deadband*** ***Limit_Enable*** *Event_Enable* *Acked_Transitions* ***Notify_Type*** *Event_Time_Stamps*

TRIDIUM
3951 Westerre Parkway, Suite 350
Richmond, Virginia 23233 USA
1.804.747.4771 Phone
1.804.747.5204 Fax

Powered by niagara AX FRAMEWORK

Object Type	Properties	
Binary Input	Object_Identifier **Object_Name** Object_Type Present_Value ***Description*** *Device_Type* Status_Flags Event_State *Reliability* **Out_Of_Service** Polarity ***Inactive_Text*** ***Active_Text***	*Change_Of_State_Time* ***Change_Of_State_Count*** (0) *Time_Of_State_Count_Reset* ***Elapsed_Active_Time*** (0) *Time_Of_Active_Time_Reset* ***Time_Delay*** ***Notification_Class*** ***Alarm_Value*** *Event_Enable* *Acked_Transitions* ***Notify_Type*** *Event_Time_Stamps*
Binary Output	Object_Identifier **Object_Name** Object_Type Present_Value ***Description*** *Device_Type* Status_Flags Event_State *Reliability* **Out_Of_Service** Polarity ***Inactive_Text*** ***Active_Text*** *Change_Of_State_Time* ***Change_Of_State_Count*** (0)	*Time_Of_State_Count_Reset* ***Elapsed_Active_Time*** (0) *Time_Of_Active_Time_Reset* ***Minimum_Off_Time*** ***Minimum_On_Time*** Priority_Array **Relinquish_Default** ***Time_Delay*** ***Notification_Class*** *Feedback_Value* *Event_Enable* *Acked_Transitions* ***Notify_Type*** *Event_Time_Stamps*
Binary Value	Object_Identifier **Object_Name** Object_Type Present_Value ***Description*** Status_Flags Event_State *Reliability* **Out_Of_Service** ***Inactive_Text*** ***Active_Text*** *Change_Of_State_Time* **Change_Of_State_Count** *(0)* *Time_Of_State_Count_Reset*	***Elapsed_Active_Time*** (0) *Time_Of_Active_Time_Reset* ***Minimum_Off_Time*** ***Minimum_On_Time*** *Priority_Array* ***Relinquish_Default*** ***Time_Delay*** ***Notification_Class*** ***Alarm_Value*** *Event_Enable* *Acked_Transitions* ***Notify_Type*** *Event_Time_Stamps*

TRIDIUM
3951 Westerre Parkway, Suite 350
Richmond, Virginia 23233 USA
1.804.747.4771 Phone
1.804.747.5204 Fax

Object Type	Properties	
Calendar	Object_Identifier **Object_Name** Object_Type	***Description*** Present_Value **Date_List**
Device	Object_Identifier Object_Name Object_Type System_Status Vendor_Name Vendor_Identifier Model_Name Firmware_Revision Application_Software_Revision ***Location*** ***Description*** Protocol_Version Protocol_Revision Protocol_Services_Supported Protocol_Object_Types_Supported Object_List Max_APDU_Length_Accepted	Segmentation_Supported *Max_Segments_Accepted* *Local_Time* *Local_Date* *UTC_Offset* *Daylight_Savings_Status* *APDU_Segment_Timeout* APDU_Timeout Number_Of_APDU_Retries *Max_Master* *Max_Info_Frames* Device_Address_Binding Database_Revision *Configuration_Files* *Last_Restore_Time* ***Backup_Failure_Timeout*** *Active_COV_Subsriptions*
File (Stream Access Only)	Object_Identifier **Object_Name** Object_Type ***Description*** File_Type	**File_Size**[1] Modification_Date **Archive** Read_Only File_Access_Method

TRIDIUM
3951 Westerre Parkway, Suite 350
Richmond, Virginia 23233 USA
1.804.747.4771 Phone
1.804.747.5204 Fax

Object Type	Properties	
Loop	Object_Identifier **Object_Name** Object_Type Present_Value ***Description*** Status_Flags Event_State *Reliability* **Out_Of_Service** Output_Units Manipulated_Variable_Reference Controlled_Variable_Reference Controlled_Variable_Value Controlled_Variable_Units Setpoint_Reference **Setpoint**[2] Action ***Proportional_Constant***	*Proportional_Constant_Units* ***Integral_Constant*** *Integral_Constant_Units* ***Derivative_Constant*** *Derivative_Constant_Units* ***Bias*** ***Maximum_Output*** ***Minimum_Output*** Priority_For_Writing ***COV_Increment*** ***Time_Delay*** *Notification_Class* ***Error_Limit*** *Event_Enable* *Acked_Transitions* *Notify_Type* *Event_Time_Stamps*
Multi-state Input	Object_Identifier **Object_Name** Object_Type Present_Value ***Description*** *Device_Type* Status_Flags Event_State *Reliability* **Out_Of_Service**	Number_Of_States ***State_Text*** ***Time_Delay*** ***Notification_Class*** ***Alarm_Values*** *Fault_Values* *Event_Enable* *Acked_Transitions* ***Notify_Type*** *Event_Time_Stamps*
Multi-state Output	Object_Identifier **Object_Name** Object_Type Present_Value ***Description*** *Device_Type* Status_Flags Event_State *Reliability* **Out_Of_Service** Number_Of_States	***State_Text*** Priority_Array **Relinquish_Default** ***Time_Delay*** ***Notification_Class*** *Feedback_Value* *Event_Enable* *Acked_Transitions* ***Notify_Type*** *Event_Time_Stamps*

TRIDIUM
3951 Westerre Parkway, Suite 350
Richmond, Virginia 23233 USA
1.804.747.4771 Phone
1.804.747.5204 Fax

Powered by niagara AX FRAMEWORK®

Object Type	Properties	
Multi-state Value	Object_Identifier **Object_Name** Object_Type Present_Value ***Description*** Status_Flags Event_State *Reliability* **Out_Of_Service** Number_Of_States	***State_Text*** *Priority_Array* ***Relinquish_Default*** ***Time_Delay*** ***Notification_Class*** ***Alarm_Values*** *Fault_Values* *Event_Enable* *Acked_Transitions* ***Notify_Type*** *Event_Time_Stamps*
Notification Class	Object_Identifier **Object_Name** Object_Type ***Description***	Notification_Class **Priority** **Ack_Required** **Recipient_List**[3]
Schedule	Object_Identifier **Object_Name** Object_Type ***Description*** **Effective_Period** ***Weekly_Schedule*** ***Exception_Schedule***	**Schedule_Default** **List_Of_Object_Property_References**[4] **Priority_For_Writing**[5] Status_Flags Reliability **Out_Of_Service**
Trend Log	Object_Identifier **Object_Name** Object_Type ***Description*** **Log_Enable**[6] ***Start_Time*** ***Stop_Time*** *Log_DeviceObjectProperty* ***Log_Interval***[6, 7] *COV_Resubscription_Interval* *Client_COV_Increment* Stop_When_Full Buffer_Size	Log_Buffer **Record_Count** (0)[6] Total_Record_Count *Notification_Threshold* *Records_Since_Notification* *Last_Notify_Record* Event_State ***Notification_Class*** *Event_Enable* *Acked_Transitions* ***Notify_Type*** *Event_Time_Stamps*

TRIDIUM
3951 Westerre Parkway, Suite 350
Richmond, Virginia 23233 USA
1.804.747.4771 Phone
1.804.747.5204 Fax

Powered by niagara AX FRAMEWORK®

Data Link Layer Options:

☒ BACnet IP, (Annex J)
☒ BACnet IP, (Annex J), Foreign Device
☒ ISO 8802-3, Ethernet (Clause 7)
☐ ANSI/ATA 878.1, 2.5 Mb. ARCNET (Clause 8)
☐ ANSI/ATA 878.1, RS-485 ARCNET (Clause 8), baud rate(s) _____
☒ MS/TP master (Clause 9), baud rate(s): 9600, 19200, 38400, 76800
☐ MS/TP slave (Clause 9), baud rate(s): _____
☐ Point-To-Point, EIA 232 (Clause 10), baud rate(s):_____
☐ Point-To-Point, modem, (Clause 10), baud rate(s): _____
☐ LonTalk, (Clause 11), medium: _____
☐ Other:

Device Address Binding:

Is static device binding supported? (This is currently necessary for two-way communication with MS/TP slaves and certain other devices.) ☒Yes ☐ No

Networking Options:

☒ Router, Clause 6 – Routing configurations: Ethernet-IP, Ethernet-MS/TP, IP-MS/TP
☐ Annex H, BACnet Tunneling Router over IP
☒ BACnet/IP Broadcast Management Device (BBMD)
Does the BBMD support registrations by Foreign Devices? ☒ Yes ☐ No

Character Sets Supported:

Indicating support for multiple character sets does not imply that they can all be supported simultaneously.

☒ ANSI X3.4	☐ IBM™/Microsoft™ DBCS	☒ ISO 8859-1
☒ ISO 10646 (UCS-2)	☐ ISO 10646 (UCS-4)	☐ JIS C 6226

If this product is a communication gateway, describe the types of non-BACnet equipment/networks(s) that the gateway supports:
This product supports communications between BACnet and any third-party system to which Niagara can connect. Contact Tridium for a list of supported protocols.

Appendix C – BACnet Testing Laboratories Product Listing

BACnet is a registered trademark of ASHRAE. ASHRAE does not endorse, approve or test products for compliance with ASHRAE standards. Compliance of listed products to the requirements of ASHRAE Standard 135 is the responsibility of BACnet International (BI). BTL is a registered trademark of BI.

BACnet Testing Laboratories Product Listing

This product has been tested at a qualified BACnet Testing Laboratory and found to comply with all the necessary interoperability requirements in place on the published test date. This listing represents the tested capability of the Listed Product. For information on additional functionality that was not covered in the test process, refer to the Manufacturer's PICS statement on the BI website.

Listing Information

Vendor		Listing Status
Tridium, Inc. 3951 Westerre Parkway, Suite 350 Richmond, VA 23233 USA		Listed Product
Test Requirements	BACnet Protocol Revision	Date Tested
Requirements as of July 2009	Revision 7 (135-2008)	July 2011

Product Name	Model Number(s)	Software Version
Niagara AX Supervisor with BACnet B-AWS	S-AX-AWS	3.6.35

Device Profiles

Profile	Model Numbers
BACnet Advanced Workstation (B-AWS)	S-AX-AWS

BIBBs Supported

Data Sharing	ReadProperty-A	DS-RP-A
	ReadProperty-B	DS-RP-B
	ReadPropertyMultiple-A	DS-RPM-A
	ReadPropertyMultiple-B	DS-RPM-B
	WriteProperty-A	DS-WP-A
	WriteProperty-B	DS-WP-B
	WritePropertyMultiple-A	DS-WPM-A
	WritePropertyMultiple-B	DS-WPM-B
	COV-A	DS-COV-A
	View-A	DS-V-A
	Advanced View-A	DS-AV-A
	Modify-A	DS-M-A
	Advanced Modify-A	DS-AM-A

Page 1 of 3

Alarm and Event Management	Alarm and Event-Notification-A	AE-N-A
	Alarm and Event-ACK-A	AE-ACK-A
	Alarm and Event-View Notifications-A	AE-VN-A
	Alarm and Event-Advanced View Notifications-A	AE-AVN-A
	Alarm and Event-View and Modify-A	AE-VM-A
	Alarm and Event-Advanced View and Modify-A	AE-AVM-A
	Alarm and Event-Alarm Summary View-A	AE-AS-A
	Alarm and Event-Event Log View and Modify-A	AE-ELVM-A

Scheduling	Scheduling-View and Modify-A	SCHED-VM-A
	Scheduling-Advanced View and Modify-A	SCHED-AVM-A
	Scheduling-Weekly Schedule-A	SCHED-WS-A

Trending	Trending-View-A	T-V-A
	Trending-Advanced View and Modify-A	T-AVM-A
	Automated Trend Retrieval-A	T-ATR-A

Device and Network Management	Dynamic Device Binding-A	DM-DDB-A
	Dynamic Device Binding-B	DM-DDB-B
	Dynamic Object Binding-A	DM-DOB-A
	Dynamic Object Binding-B	DM-DOB-B
	Automatic Device Mapping-A	DM-ADM-A
	Automatic Network Mapping-A	DM-ANM-A
	Time Synchronization-A	DM-TS-A
	Time Synchronization-B	DM-TS-B
	UTC Time Synchronization-A	DM-UTC-A
	UTC Time Synchronization-B	DM-UTC-B
	Automatic Time Synchronization–A	DM-ATS-A
	Manual Time Synchronization–A	DM-MTS-A
	DeviceCommunicationControl-A	DM-DCC-A
	DeviceCommunicationControl-B	DM-DCC-B
	ReinitializeDevice-A	DM-RD-A
	ReinitializeDevice-B	DM-RD-B
	Backup and Restore-A	DM-BR-A
	Restart-A	DM-R-A
	Object Creation and Deletion-A	DM-OCD-A
	List Manipulation-A	DM-LM-A
	List Manipulation-B	DM-LM-B

Object Type Support

Device		

Data Link Layer Options

Media	Options
BACnet/IP (Annex J)	BBMD
Ethernet	

Page 2 of 3

Networking Options

Networking Functionality	Media
Router	BACnet/IP (Annex J) – Ethernet

Character Set Support

ANSI X3.4
ISO 10646 (UCS-2)

Page 3 of 3

END OF SECTION 25 0200

SECTION 26 0501 - GENERAL PROVISIONS - ELECTRICAL

1. GENERAL

A. The Instructions to Bidders, General and Special Conditions, and all other contract documents shall apply to the Contractor's work as well as to each of his Sub Contractor's work. Each Contractor is directed to familiarize himself in detail with all documents pertinent to this Contract. In case of conflict between these General Provisions and the General and/or Special Conditions, the affected Contractor shall contact the Engineer for clarification and final determination.

B. The Contractor shall be governed by any alternates, unit prices and Addenda or other contract documents insofar as they may affect his part of the work.

C. All materials and installation shall comply with University construction standards. These standards are available at: http://www.uky.edu/cpmd/design-standards. Special attention shall be given to Divisions 02, 08, 26, 27 and 28. The Contractor shall familiarize himself with the published standards. In the event of a conflict between these standards and the Contract Documents the most stringent requirement shall be met.

D. The work included in this division consists of the furnishing of all labor, equipment, transportation, supplies, material and appurtenances and performing all operations necessary for the satisfactory installation of complete and operating electrical systems indicated on the drawings and/or specified herein.

E. Any materials, labor, equipment or services not mentioned specifically herein which may be necessary to complete or perfect any part of the electrical systems in a substantial manner, in compliance with the requirements stated, implied, or intended in the drawings and specifications, shall be included as part of this Contract. The Contractor shall give written notice of any materials or apparatus believed inadequate or unsuitable; in violation of laws, ordinances, rules or regulations of authorities having jurisdiction; and any necessary items of work omitted a minimum of ten days prior to bid. In the absence of such written notice and by the act of submitting his bid, it shall be understood that the Contractor has included the cost of all required items in his bid, and that he will be responsible for the approved satisfactory functioning of the entire system without extra compensations.

F. It is not the intent of this section of the specifications (or the remainder of the contract documents) to make any specific Contractor, other than the Contractor holding the prime contract, responsible to the Owner, Architect and Engineer. All transactions such as submittal of shop drawings, claims for extra costs, requests for equipment or materials substitution, shall be done through the Contractor to the Architect (if applicable), then to the Engineer.

G. This section of the Specifications or the arrangement of the contract documents shall not be construed as an attempt to arbitrarily assign responsibility for work, material, equipment or services to a particular trade Contractor or Sub-Contractor. Unless stated otherwise, the subdivision and assignment of work under the various sections shall be the responsibility of the Contractor holding the prime contract.

H. It is the intent of this Contract to deliver to the Owner a "like new" project once work is complete. Although plans and specifications are complete to the extent possible, it shall be responsibility of the Contractors involved to remove and/or relocate or re-attach any existing or new systems which interfere with new equipment or materials to be installed by other trades without additional cost to the Owner.

I. The Contractor shall provide interim life safety and fire detection measures as required by the Authority Having Jurisdiction, Division 1 specifications, NFPA, and applicable Codes. This includes temporary relocations of heat/smoke detection, exit signage, and egress lighting in existing buildings as applicable.

J. In general, and to the extent possible, all work shall be accomplished without interruption of the existing facilities' operations. Each Contractor shall advise the Architect, Owner and Engineer (as applicable) in writing at least one week prior to the deliberate interruption of any services. The Owner shall be advised of the exact time that interruption will occur and the length of time the interruption will occur. Failure to comply with this requirement may result in complete work stoppage by the Contractors involved until a complete schedule of interruptions can be developed.

K. Whenever utilities are interrupted, either deliberately or accidentally, the Contractor shall work continuously to restore said service. The Contractor shall provide tools, materials, skilled journeymen of his own and other trades as necessary, premium time as needed and coordination with all applicable utilities, including payment of utility company charges (if any), all without request for extra compensation to the Owner, except where otherwise provided for in the contract document.

L. The Contractor shall be responsible for maintaining existing fire alarm, paging, access control, intrusion detection, CCTV, nurse call systems, etc., in occupied spaces in renovation and addition projects. The Contractor shall be required to disconnect and remove all existing devices in renovated areas (where directed as such) without affecting system operations. All costs associated with said work shall be borne by the Contractor.

M. Definitions:

(1) Prime Contractor - The Contractor who has been engaged by the Owner in a contractual relationship to accomplish the work.

(2) Electrical Contractor - Any Contractor whether bidding or working independently or under the supervision of a General Contractor, that is: the one holding the Prime Contract and who installs any type of Electrical work, such as: power, lighting, television, telecommunications, data, fiber optic, intercom, fire detection and alarm, security, video, underground or overhead electrical, etc.

<u>Note</u>: Any reference within these specifications to a specific entity, i.e., "Electrical Contractor" is not to be construed as an attempt to limit or define the scope of work for that entity or assign work to a specific trade or contracting entity. Such assignments of responsibility are the responsibility of the Contractor or Construction Manager holding the prime contract, unless otherwise provided herein.

(3) Electrical Sub-Contractor - Each or any Contractor contracted to, or employed by, the Electrical Contractor for any work required by the Electrical Contractor.

(4) Engineer - The Consulting Mechanical-Electrical Engineers, either consulting to the Owner, Architect, other Engineers, etc.

(5) Architect - The Architect of Record for the project, if any.

(6) Furnish - Deliver to the site in good condition.

(7) Provide - Furnish and install in complete working order.

(8) Install - Install equipment furnished by others in complete working order.

(9) Contract Documents - All documents pertinent to the quality and quantity of all work to be performed on the project. Includes, but not limited to: Plans, Specifications, Addenda, Instructions to Bidders, (both General and Sub-Contractors), Unit Prices, Shop Drawings, Field Orders, Change Orders, Cost Breakdowns, Construction Manager's Assignments, Architect's Supplemental Instructions, Periodical Payment Requests, etc.

2. INTENT

A. It is the intent of these specifications and all associated drawings that the Contractor provide finished work, tested, and ready for operation. Wherever the word "provide" is used, it shall mean "furnish and install complete and ready for use."

B. Minor details not usually shown or specified, but necessary for the proper installation and operation, shall be included in the work, the same as if herein specified or shown.

3. ELECTRICAL DRAWINGS AND SPECIFICATIONS

A. The drawings are diagrammatic only and indicate the general arrangement of the systems and are to be followed insofar as possible. If deviations from the layouts are necessitated by field conditions, detailed layouts of the proposed departures shall be submitted in writing to the Engineer for review before proceeding with the work. The Contract Drawings are not intended to show every vertical or horizontal offset which may be necessary to complete the systems. Contractors shall, however, anticipate that additional offsets may be required and submit their bid accordingly.

B. The drawings and specifications are intended to supplement each other. No Contractor or supplier shall take advantage of conflict between them, or between parts of either, but should this condition exist, the Contractor or supplier shall request a clarification of the condition at least ten days prior to the submission of bids so that the condition may be clarified by Addendum. In the event that such a condition arises after work is started, the interpretation of the Engineer shall be the determining factor. In all instances, unless modified in writing and agreed upon by all parties thereto, the Contract to accomplish the work shall be binding on the affected Contractor.

C. The drawings and specifications shall be considered to be cooperative and complimentary and anything appearing in the specifications which may not be indicated on the drawings or conversely, shall be considered as part of the Contract and must be executed the same as though indicated by both.

D. The Contractor shall make all his own measurements in the field and shall be responsible for correct fitting. He shall coordinate this work with all other branches of work in such a manner as to cause a minimum of conflict or delay.

E. The Engineer shall reserve the right to make minor adjustments in location of conduit, fixtures, outlets, switches, etc., where he considers such adjustments desirable in the interest of concealing work or presenting a better appearance.

F. The Contractor shall evaluate ceiling heights called for on Architectural Plans. Where the location of Electrical equipment may interfere with ceiling heights, the Contractor shall call this to the attention of the Engineer <u>in writing prior to making the installation.</u> Any such changes shall be

anticipated and requested sufficiently in advance so as to not cause extra work on the part of the Contractor or unduly delay the work.

G. Special Note: Always check ceiling heights indicated on Drawings and Schedules and insure that these heights may be maintained after all mechanical and electrical equipment is installed. If a conflict is apparent, notify the Engineer in writing for instructions.

H. Should overlap of work between the various trades become evident, this shall be called to the attention of the Engineer. In such event neither trade shall assume that he is to be relieved of the work which is specified under his branch until instructions in writing are received from the Engineer.

I. The drawings are intended to show the approximate location of equipment, materials, etc. Dimensions given in figures on the drawings shall take precedence over scaled dimensions and all dimensions whether given in figures or scaled shall be verified in the field. In case of conflict between small and large scale drawings, the larger scale drawings shall take precedence.

J. The Contractor and his Sub Contractors shall review all drawings in detail as they may relate to his work (structural, architectural, site survey, mechanical, etc.). Review all drawings for general coordination of work, responsibilities, ceiling clearances, wall penetration points, chase access, fixture elevations, etc. Make any pertinent coordination or apparent conflict comments to the Engineers at least ten days prior to bids, for issuance of clarification by written addendum.

K. Where on any of the drawings a portion of the work is drawn out and the remainder is indicated in outline, or not indicated at all, the parts drawn out shall apply to all other like portions of the work. Where ornament or other detail is indicated by starting only, such detail shall be continued throughout the courses or parts in which it occurs and shall also apply to all other similar parts of the work, unless otherwise indicated.

4. EXAMINATION OF SITE AND CONDITIONS

A. The Contractor shall inform himself of all of the conditions under which the work is to be performed, the site of the work, the structure of the ground, the obstacles that may be encountered, the availability and location of necessary facilities and all relevant matters concerning the work. All Contractors or suppliers shall carefully examine all Drawings and Specifications and contract documents to determine the kind and type of materials to be used throughout the project and which may, in any way, affect the execution of his work.

B. The Contractor shall fully acquaint himself with all existing conditions as to ingress and egress, distance of haul from supply points, routes for transportation of materials, facilities and services, availability of temporary or permanent utilities, etc. The Contractor shall include in his work all expenses or disbursements in connection with such matters and conditions. The Contractor shall verify all work shown on the drawings and conditions at the site, and shall report in writing to the Engineer ten days prior to bid, any apparent omissions or discrepancies in order that clarifications may be issued by written addendum. No allowance is to be made for lack of knowledge concerning such conditions after bids are accepted.

5. EQUIPMENT AND MATERIALS SUBSTITUTIONS OR DEVIATIONS

A. When any Contractor requests review of substitute materials and/or equipment, and when under an approved formal alternate proposal, it shall be understood and agreed that such substitution, if approved, will be made without additional cost regardless of changes in connections, spacing, service, mounting, etc. In all cases where substitutions affect other trades, the Contractor offering

such substitutions shall advise all such Contractors of the change and shall reimburse them for all necessary changes in their work. Any drawings, Specifications, Diagrams, etc., required to describe and coordinate such substitutions or deviations shall be professionally prepared at the responsible Contractor's expense. Special Note: Review of Shop Drawings by the Engineer does not absolve the Contractor of this responsibility

B. References in the specifications to any article, device, product, material, fixture, form, or type of construction by name, make, or catalog number shall be interpreted as establishing a standard of quality and shall not be construed as limiting competition. Each Contractor, in such cases, may, at his option, use any article, device, product, material, fixture, form, or type of construction which in the judgment of the Engineer is equivalent to that specified, provided the provisions of paragraph (A) immediately preceding are met. Substitutions shall be submitted to the Engineer a minimum of ten days prior to bid date for approval to bid in written form thru addenda or other method selected by the Engineer. If prevailing laws of cities, towns, states or countries are more stringent than these specifications regarding such substitutions, then those laws shall prevail over these requirements.

C. Wherever any equipment and material is specified exclusively only such items shall be used unless substitution is accepted in writing by the engineers.

D. The Contractor shall furnish along with his proposal a list of specified equipment and materials which he proposes to provide. Where several makes are mentioned in the Specifications and the Contractor fails to state which he proposes to furnish, the Engineer shall have the right to choose any of the makes mentioned without change in price.

E. The Contractor shall review the contract documents and if a material substitution form is required for each proposed substitution, it shall be submitted per requirements.

6. SUPERVISION OF WORK

A. Each Contractor and Sub-Contractors shall personally supervise the work or have a competent superintendent on the project site at all times during progress of the work, with full authority to act for him in matters related to the project.

7. CODES, RULES, PERMITS, FEES, REGULATIONS, ETC.

A. The Contractor shall give all necessary notices, obtain and pay for all permits, government sales taxes, fees, and other costs including utility connections or extensions, in connection with his work. As necessary, he shall file all required plans, utility easement requests and drawings, survey information on line locations, load calculations, etc., prepare all documents and obtain all necessary approvals of all utility and governmental departments having jurisdiction; obtain all required certificates of inspection for his work and deliver same to the Engineer before request for acceptance and final payment for the work.

B. Ignorance of Codes, Rules, regulations, utility company requirements, laws, etc., shall not diminish or absolve Contractor's responsibilities to provide and complete all work in compliance with such.

C. The Contractor shall include in the work, without extra cost, any labor, materials, services, apparatus or drawings required in order to comply with all applicable laws, ordinances rules and regulations, whether or not shown on drawings and/or specified.

D. All materials furnished and all work installed shall comply with the current edition of the National Electrical Codes, National Fire Codes of the National Fire Protection Association, the requirements of local utility companies, and with the requirements of all governmental agencies or departments having jurisdiction.

E. All material and equipment for the electrical systems shall bear the approval label, or shall be listed by the Underwriters' Laboratories, Incorporated. Listings by other testing agencies may be acceptable with written approval by the Engineer.

F. All electrical work is to be constructed and installed in accordance with plans and specifications which have been approved in their entirety and/or reflect any changes requested by the State Fire Marshal, as applicable or required. Electrical work shall not commence until such plans are in the hands of the Electrical Contractor.

G. The Contractor shall insure that his work is accomplished in accord with OSHA Standards and any other applicable government requirements.

H. Where conflict arises between any code and the plans and/or specifications, the code shall apply except in the instance where the plans and specifications exceed the requirements of the code. Any changes required as a result of these conflicts shall be brought to the attention of the Engineer at least ten working days prior to bid date, otherwise the Contractor shall make the required changes at his own expense. The provisions of the codes constitute minimum standards for wiring methods, materials, equipment and construction and compliance therewith will be required for all electrical work, except where the drawings and specifications require better materials, equipment, and construction than these minimum standards, in which case the drawings and specifications shall be the minimum standards.

8. COST BREAKDOWNS/SCHEDULE OF VALUES

A. Within thirty days after acceptance of the Contract, the Contractor is required to furnish to the Engineer one copy of a detailed cost breakdown on each respective area of work. These cost breakdowns shall be made on forms provided or approved by the Engineer or Architect. Payments will not be made until satisfactory cost breakdowns are submitted. Refer to the end of this section for a sample of expected level and breakout being required.

9. CORRECTION PERIOD

A. All equipment, apparatus, materials, etc., shall be the best of its respective kind. The Contractor shall replace all materials at his own expense, which fail or are deemed defective as described in the General Conditions. The effective date of completion of the work shall be the date each or any portion of the work is accepted by the Architect or Engineer as being substantially complete.

B. Items of equipment which have longer guarantees, as called for in these specifications or as otherwise offered by the manufacturer, such as generators, engines, batteries, transformers, etc., shall have warranties and guarantees completed in order, and shall be in effect at the time of final acceptance of the work by the Engineer. The Contractor shall present the Engineer with such warranties and guarantees at the time of final acceptance of the work. The Owner reserves the right to use equipment installed by the Contractor prior to date of final acceptance. Such use of equipment shall in no way invalidate the guarantee except that Owner shall be liable for any damage to equipment during this period due to negligence of his operator or other employee.

10. INSPECTION, APPROVALS AND TESTS

A. Before requesting a final review of the installation from the Architect and/or Engineer, the Contractor shall thoroughly inspect his installation to assure that the work is complete in every detail and that all requirements of the Contract Documents have been fulfilled. Failure to accomplish this may result in charges from the Architect and/or Engineers for unnecessary and undue work on their part.

B. The Contractor shall provide as part of this contract electrical inspection by a competent Electrical Inspection Agency, licensed to provide such services in the Commonwealth of Kentucky. The name of this agency shall be included in the list of materials of the Form of Proposal by the Contractor. All costs incidental to the provision of electrical inspections shall be borne by the Electrical Contractor.

C. The Contractor shall advise each Inspection Agency in writing (with an information copy of the correspondence to the Architect and/or Engineer) when he anticipates commencing work. Failure of the Inspection Agency to inspect the work in the stage following and submit the related reports may result in the Contractor's having to expose concealed work not so inspected. Such exposure will be at the expense of the responsible Contractor.

D. Inspections shall be scheduled for rough as well as finished work. The rough inspections shall be divided into as many inspections as may be necessary to cover all roughing-in without fail. Report of each such inspection visit shall be submitted to the Architect, Engineer and the Contractor within three days of the inspection.

E. Approval by an Inspector does not relieve the Contractor from the responsibilities of furnishing equipment having a quality of performance equivalent to the requirements set forth in these plans and specifications. All work under this contract is subject to the review of the Architect and/or Engineer, whose decision is binding.

F. Before final acceptance, the Contractor shall furnish three copies of the certificates of final approval by the Electrical Inspector (as well as all other inspection certificates) to the Engineer with one copy of each to the appropriate government agencies, as applicable. Final payment for the work shall be contingent upon completion of this requirement.

G. The Contractor shall test all wiring and connections for cross connects, continuity and grounds before equipment and fixtures are connected, and when indicated or required, demonstrate by continuity/load/voltage test and Megger Test the installation of any circuit or group of circuits. Where such tests indicate the possibility of faulty insulation, locate the point of such fault, replacing same with new and demonstrate by further test the elimination of such defect. The secondary service entrance conductors from the utility (source) transformer to the main service disconnecting means shall be megger tested. The results of this test shall be turned over to the engineer for review and approval. Any conductor failing the test shall be replaced and any costs associated shall be borne by the contractor.

11. COMPUTER-BASED SYSTEM SOFTWARE

A. For all equipment, controls, hardware, computer-based systems, programmable logic controllers, and other materials provided as a part of the work, software that is installed shall be certified in writing to the Engineer and Owner by the manufacturer and/or writer to be free of programming errors that might affect the functionality of the intended use.

12. CHANGES IN ELECTRICAL WORK

REFER TO GENERAL AND SPECIAL CONDITIONS.

13. CLAIMS FOR EXTRA COST

REFER TO GENERAL AND SPECIAL CONDITIONS.

14. SURVEYS, MEASUREMENTS AND GRADES

A. The Contractor shall lay out his work and be responsible for all necessary lines, levels, elevations and measurements. He must verify the figures shown on the drawings before laying out the work and will be held responsible for any error resulting from his failure to do so.

B. The Contractor shall base all measurements, both horizontal and vertical from established bench marks. All work shall agree with these established lines and levels. Verify all measurements at site and check the correctness of same as related to the work.

C. Should the Contractor discover any discrepancy between actual measurements and those indicated, which prevents following good practice or the intent of the drawings and specifications, he shall notify the Engineer thru normal channels of job communication and shall not proceed with his work until he has received instructions from the Engineer.

15. TEMPORARY USE OF EQUIPMENT

A. The permanent electrical equipment, when installed, may be used for temporary services, subject to an agreement among the Contractors involved, the Owner, and with the consent of the Engineer. Should the permanent systems be used for this purpose, each Contractor shall pay for all temporary connections required and any replacements required due to damage without cost, leaving the equipment and installation in "as new" condition. The Contractor may be required to bear utility costs, user fees, etc.

B. Permission to use the permanent equipment does not relieve the Contractors who utilize this equipment from the responsibility for any damages to the building construction and/or equipment which might result because of its use.

16. TEMPORARY SERVICES

A. The Contractor shall arrange for temporary electrical and other services which he may require to accomplish his work. In the absence of other provisions in the contract, the Contractor shall provide for his own temporary services of all types, including the cost of connections, utility company fees, construction, removal, etc., in his bid.

17. RECORD DRAWINGS

A. The Contractor shall insure that any deviations from the design are being recorded daily or as necessary on record drawings being maintained by the Contractor. Dimensions from fixed, visible permanent lines or landmarks shown in vertical and horizontal ways shall be utilized. Compliance shall be a requirement for final payment. Pay particular attention to the location of underfloor or underground exterior in-contract or utility-owned or leased service lines, main switches and other appurtenances important to the maintenance and safety of the Electrical System. Keep information in a set of drawings set aside at the job site especially for this purpose. Deliver these record drawings electronically to the Engineer in AutoCad 2000 format (or more recent version) along with the hand marked field set. Electronic bid drawings will be furnished to the Contractor for his use at the completion of the work.

18. MATERIALS AND WORKMANSHIP

A. All electrical equipment, materials and articles incorporated in the work shall be new and of comparable quality to that specified. All workmanship shall be first-class and shall be performed by electricians skilled and regularly employed in their respective trades. The Contractor shall determine that the equipment he proposes to furnish can be brought into the building(s) and installed within the space available. All equipment shall be installed so that all parts are readily accessible for inspection, maintenance, replacement, etc. Extra compensation will not be allowed for relocation of equipment for accessibility or for dismantling equipment to obtain entrance into the building(s).

B. All conduit and/or conductors shall be concealed in or below walls, floors or above ceilings unless otherwise noted. All fixtures, devices and wiring required shall be installed to make up complete systems as indicated on the drawings and specified herein.

C. All materials, where applicable, shall bear Underwriters' Laboratories label or that of another Engineer-approved testing agency, where such a standard has been established.

D. Each length of conduit, wireway, duct, conductor, cable, fitting, fixture and device used in the electrical systems shall be stamped or indelibly marked with the makers mark or name.

E. All electrical equipment shall bear the manufacturer's name and address and shall indicate its electrical capacity and characteristics.

F. All electrical materials, equipment and appliances shall conform to the latest standards of the National Electric Manufacturers Association (NEMA) and the National Board of Fire Underwriters (NBFU) and shall be approved by the Owner's insuring agency if so required.

19. QUALIFICATIONS OF WORKMEN

A. All electrical work shall be accomplished by qualified workmen competent in the area of work for which they are responsible. Untrained and incompetent workmen as evidenced by their workmanship shall be relieved of their responsibilities in those areas. The Engineer shall reserve the right to determine the quality of workmanship of any workman and unqualified or incompetent workmen shall refrain from work in areas not satisfactory to him. Requests for relief of a workman shall be made through the normal channels of responsibility established by the Architect or the contract document provisions.

B. All electrical work shall be accomplished by Journeymen electricians under the direct supervision of a licensed Electrician. All applicable codes, utility company regulations, laws and permitting authority of the locality shall be fully complied with by the Contractor.

C. Special electrical systems, such as Fire Detection and Alarm Systems, Intercom or Sound Reinforcement Systems, Telecommunications or Data Systems, Lightning Protection Systems, Video Systems, Special Electronic Systems, Control Systems, etc., shall be installed by workmen normally engaged or employed in these respective trades. As an exception to this, where small amounts of such work are required and are, in the opinion of the Engineer, within the competency of workmen directly employed by the Contractor involved, they may be provided by this Contractor.

20. CONDUCT OF WORKMEN

A. The Contractor shall be responsible for the conduct of all workmen under his supervision. Misconduct on the part of any workmen to the extent of creating a safety hazard, or endangering the lives and property of others, shall result in the prompt relief of that workman. The consumption or influence of alcoholic beverages, narcotics or illegally used controlled substances on the jobsite is strictly forbidden.

21. COOPERATION AND COORDINATION BETWEEN TRADES

A. The Contractor is expressly directed to read the General Conditions and all detailed sections of these specifications for all other trades and to study all drawings applicable to his work, including Architectural, Mechanical, Structural and other pertinent Drawings, to the end that complete coordination between trades will be effected.

B. Refer to Coordination Among Trades, Systems Interfacing and Connection of Equipment Furnished by Others section of these Specifications for further coordination requirements.

22. PROTECTION OF EQUIPMENT

A. The Contractor shall be entirely responsible for all material and equipment furnished by him in connection with his work and special care shall be taken to properly protect all parts thereof from damage during the construction period. Such protection shall be by a means acceptable to the Engineer. All rough-in conduit shall be properly plugged or capped during construction in a manner approved by the Engineer. Equipment damaged while stored on site either before or after installation shall be repaired or replaced (as determined by the Engineer) by the responsible Contractor.

23. CONCRETE WORK

A. The Contractor shall be responsible for the provision of all concrete work required for the installation of any of his systems or equipment. If this work is provided by another trade, it will not relieve the Electrical Contractor of his responsibilities relative to dimensions, quality of workmanship, locations, etc. In the absence of other concrete specifications, all concrete related to Electrical work shall be 3000 PSI minimum compression strength at 28 days curing and shall conform to the standards of the American Concrete Institute Publication ACI-318. Heavy equipment shall not be set on pads for at least seven days after pour.

B. All concrete pads shall be complete with all pipe sleeves, embeds, anchor bolts, reinforcing steel, concrete, etc., as required. Pads larger than l8" in width shall be reinforced with minimum #4 round bars on 6" centers both ways. All reinforcing steel shall be per ASTM requirements, tied properly, lapped 18 bar diameters and supported appropriately up off form, slab or underlayment. Bars shall be approximately 3" above the bottom of the pad with a minimum 2" cover. All parts of pads and foundations shall be properly rodded or vibrated. If exposed parts of the pads and foundations are rough or show honeycomb after removing forms properly adhered repairs shall be made. If structural integrity is violated, the concrete shall be replaced. All surfaces shall be rubbed to a smooth finish.

Special Note: All pads and concrete lighting standard bases shall be crowned slightly so as to avoid water ponding beneath equipment.

C. In general, concrete pads for small equipment shall extend 6" beyond the equipment's base dimensions. For large equipment with service access panels, extend pads l8" beyond base or overall dimensions to allow walking and servicing space at locations requiring service access.

D. Exterior concrete pads shall be 4" minimum above grade and 4" below grade on a tamped 4" dense grade rock base unless otherwise noted or required by utility company. Surfaces of all foundations and bases shall have a smooth finish with three-quarter inch radius or chamfer on exposed edges, trowelled or rubbed smooth. All exterior pads shall be crowned approximately 1/8" per foot, sloping from center for drainage.

24. RESTORATION OF NEW OR EXISTING SHRUBS, PAVING, ETC.

A. The Contractor shall restore to their original condition all paving, curbing surfaces, drainage ditches, structures, fences, shrubs, existing or new building surfaces and appurtenances, and any other items damaged or removed by his operations. Replacement and repairs shall be in accordance with good construction practice and shall match materials employed in the original construction of the item to be replaced. All repairs shall be to the satisfaction of the Engineer, and in accord with the Architect's standards for such work, as applicable.

25. MAINTENANCE OF EXISTING UTILITIES AND LINES

A. The locations of all piping, conduits, cables, utilities and manholes existing, or otherwise, that come within the contract construction site, shall be subject to continuous uninterrupted maintenance with no exception unless the Owner of the utilities grants permission to interrupt same temporarily, if need be. Provide one week's written notice to Engineer, Architect and Owner prior to interrupting any utility service or line. Also see Article 1. - General, this section.

B. Known utilities and lines as available to the Engineer are shown on the drawings. However, it is additionally required that, prior to any excavation being performed, each Contractor ascertain that no utilities or lines, known or unknown, are endangered by the excavation.

C. If the above mentioned utilities or lines occur in the earth within the construction site, the Contractor shall first probe and make every effort to locate the lines prior to excavating in the respective area. Electromagnetic utility locators and acoustic pipe locators shall be utilized to determine where metallic and non-metallic piping is buried prior to any excavation.

D. Cutting into existing utilities and services shall be done in coordination with and as designated by the Owner of the utility. The Contractor shall work continuously to restore service(s) upon deliberate or accidental interruption, providing premium time and materials as needed without extra claim to the Owner.

E. The Contractor shall repair to the satisfaction of the Engineer any surface or subsurface improvements damaged during the course of the work, unless such improvement is shown to be abandoned or removed.

F. Machine excavation shall not be permitted within ten feet of existing gas or fuel lines. Hand excavate only in these areas, in accord with utility company, agency or other applicable laws, standards or regulations.

G. Protect all new or existing lines from damage by traffic, etc. during construction.

H. Protect existing trees, indicated to remain with fencing or other approved method. Hold all new subsurface lines outside the drip line of trees, offsetting as necessary to protect root structures. Refer to planting or landscaping plans, or in their absence, consult with the Architect.

26. SMOKE AND FIRE PROOFING

A. The Contractor shall not penetrate rated fire walls, ceilings or floors with conduit, cable, bus duct, wireway or other raceway system unless all penetrations are protected in a code compliant manner which maintains the rating of the assembly. Smoke and fire stop all openings made in walls, chases, ceiling and floors. Patch all openings around conduit, wireway, bus duct, etc., with appropriate type material to smoke stop walls and provide needed fire rating at fire walls, ceilings and floors. Smoke and fire proofing materials and method of application shall be approved by the local authority having jurisdiction.

27. QUIET OPERATION, SUPPORTS, VIBRATION AND OSCILLATION

A. All work shall operate under all conditions of load without any objectionable sound or vibration, the performance of which shall be determined by the Engineer. Noise from moving machinery or vibration noticeable outside of room in which it is installed, or annoyingly noticeable noise or vibration inside such room, will be considered objectionable. Sound or vibration conditions considered objectionable by the Engineer shall be corrected in an approved manner by the Contractor (or Contractors responsible) at his expense.

B. All equipment subject to vibration and/or oscillation shall be mounted on vibration supports suitable for the purpose of minimizing noise and vibration transmission, and shall be isolated from external connections such as piping, ducts, etc., by means of flexible connectors, vibration absorbers or other approved means. Surface mounted equipment such as panels, switches, etc., shall be affixed tightly to their mounting surface.

C. The Contractor shall provide supports for all equipment furnished by him using an approved vibration isolating type as needed. Supports shall be liberally sized and adequate to carry the load of the equipment and the loads of attached equipment, piping, etc. All equipment shall be securely fastened to the structure either directly or indirectly through supporting members by means of bolts or equally effective means. No work shall depend on the supports or work of unrelated trades unless specifically authorized in writing by the Architect or Engineer.

28. FINAL CONNECTIONS TO EQUIPMENT

A. The roughing-in and final connections to all electrically operated equipment furnished under this and all other sections of the contract documents or by others, shall be included in the Contract and shall consist of furnishing all labor and materials for connection. The Contractor shall carefully coordinate with equipment suppliers, manufacturers representatives, the vendor or other trades to provide complete electrical and dimensional interface to all such equipment (kitchen, hoods, mechanical equipment, panels, refrigeration equipment, etc.).

29. ACCESSIBILITY

A. The Contractor shall be responsible for the sufficiency of the size of shafts and chases, the adequate clearance in partitions and above suspended ceilings for the proper installation of his work. He shall cooperate with the General Contractor (or Construction Manager) and all other Contractors whose work is in the same space, and shall advise each Contractor of his requirements. Such spaces and clearances shall be kept to the minimum size required to ensure adequate clearance and access.

B. The Contractor shall locate all equipment which must be serviced, operated, or maintained in fully accessible positions. Equipment shall include but not be limited to junction boxes, pull boxes, contactors, panels, disconnects, controllers, switchgear, etc. Minor deviations from

drawings may be made to allow for better accessibility, and any change shall be approved where the equipment is concealed.

C. Each Contractor shall provide (or arrange for the provision by other trades) the access panels for each concealed junction box, pull box, fixtures or electrical device requiring access or service as shown on Engineer's plans or as required. Locations of these panels shall be identified in sufficient time to be installed in the normal course of work. All access panels shall be installed in accord with the Architect's standards for such work.

D. Access Doors; in Ceilings or Walls:

(1) In mechanical, electrical, or service spaces:

14 gauge aluminum brushed satin finish, 1" border.

(2) In finished areas:

14 gauge primed steel with 1" border to accept the architectural finishes specified for the space. Confirm these provisions with the Architect prior to obtaining materials or installing any such work.

(3) In fire or smoke rated partitions, access doors shall be provided that equal or exceed the required rating of the construction they are mounted in.

30. ELECTRICAL CONNECTIONS

A. The Contractor shall furnish and install all power wiring complete from power source to motor or equipment junction box, including power wiring through starters. The Contractor shall install all starters not factory mounted on equipment. Unless otherwise noted, the supplier of equipment shall furnish starters with the equipment. Also refer to Divisions 11, 14, 20, 21, 22, 23 and 25 of the Specifications, shop drawings and equipment schedules for additional information.

B. All control, interlock, sensor, thermocouple and other wiring required for equipment operation shall be provided by the Contractor. All such installations shall be fully compliant with all requirements of Division 26 and 27 regardless of which trade actually installs such wiring. Motors and equipment shall be provided for current and voltage characteristics as indicated or required. All wiring shall be enclosed in raceways unless otherwise noted.

C. Each Contractor or sub-contractor, prior to bidding the work, shall coordinate power, control, sensor, interlock and all other wiring requirements for equipment or motors with all other contractors or sub-contractors, to ensure all needed wiring is provided in the Contract. Failure to make such coordination shall not be justification for claims of extra cost or a time extension to the Contract.

31. MOTORS

A. Each motor shall be provided by the equipment supplier, installer or manufacturer with conduit terminal box and N.E.C. required disconnecting means as indicated or required. Three-phase motors shall be provided with external thermal overload protection in their starter units. Single-phase motors shall be provided with thermal overload protection, integral to their windings or external, in control unit. All motors shall be installed with NEMA-rated starters as specified and shall be connected per the National Electrical Code.

B. The capacity of each motor shall be sufficient to operate associated driven devices under all conditions of operation and load and without overload, and at least of the horsepower indicated or specified. Each motor shall be selected for quiet operation, maximum efficiency and lowest starting KVA per horsepower as applicable. Motors producing excessive noise or vibration shall be replaced by the responsible contractor. See Division 20, 22 and 23 of the Specifications for further requirements and scheduled sizes.

C. All three-phase motors shall be tested for proper rotation. Correct wiring if needed and retest. Document testing and corrective action in operations and maintenance manual.

32. CUTTING AND PATCHING

A. Unless otherwise indicated or specified, the Contractor shall provide cutting and patching necessary to install the work specified in this Division. Patching shall match adjacent surfaces to the satisfaction of the Engineer and shall be in accord with the Architect's standards for such work, as applicable.

B. No structural members shall be cut without the approval of the Structural Engineer and all such cutting shall be done in a manner directed by him.

C. When installing conduit, pipe, or any other work in insulated concrete form (ICF) walls, the responsible subcontractor for the work shall provide spray foam insulation to patch the rigid insulation to maintain full integrity of the insulating value of the wall after the mechanical and electrical work is complete. Furthermore all new work shall NOT be installed in concrete center of wall. All mechanical and electrical installations shall be on the interior side of the concrete.

33. ANCHORS

A. Each Contractor shall provide and locate all inserts required for his work before the floors and walls are built, or shall be responsible for the cost of cutting and patching required where inserts were not installed, or where incorrectly located. Each Contractor shall do all drilling required for the installation of his hangers. Drilling of anchor holes may be prohibited in post-tensioned concrete construction, in which case the Contractor shall request approved methods from the Architect and shall carefully coordinate setting of inserts, etc., with the Structural Engineer and/or Architect.

34. WEATHERPROOFING

A. Where any work pierces waterproofing, including waterproof concrete, the method of installation shall be as approved by the Architect and/or Engineer before work is done. The Contractor shall furnish all necessary sleeves, caulking and flashing required to make openings absolutely watertight.

B. Wherever work penetrates roofing, it shall be done in a manner that will not diminish or void the roofing guarantee or warranty in any way. Coordinate all such work with the roofing installer.

35. OPERATING INSTRUCTIONS

A. Upon completion of all work and all tests, each Contractor shall furnish the necessary skilled labor and helpers for operating his systems and equipment for a period of three days of eight hours each, or as otherwise specified. During this period, instruct the Owner or his representative fully in the operations, adjustment, and maintenance of all equipment furnished. Give at least one week's written notice to the Owner, Architect and Engineer in advance of this

period. The Engineer may attend any such training sessions or operational demonstrations. The Contractor shall certify in writing to the Engineer that such demonstrations have taken place, noting the date, time and names of the Owner's representative that were present.

B. Each Contractor shall furnish three complete bound sets for approval to the Engineer of typewritten and/or blueprinted instructions for operating and maintaining all systems and equipment included in this contract. All instructions shall be submitted in draft, for approval, prior to final issue. Manufacturer's advertising literature or catalogs will not be acceptable for operating and maintenance instructions.

C. Each Contractor, in the above mentioned instructions, shall include the maintenance schedule for the principal items of equipment furnished under this contract and a detailed, easy to read parts list and the name and address of the nearest source of supply.

D. Formatting & content shall follow the guidelines outlined in the latest version of ASHRAE Applications Handbook, Guideline 4. As a minimum, the following shall be included:

- The operation and maintenance document directory should provide easy access and be well organized and clearly identified.
- Emergency information should be immediately available during emergencies and should include emergency and staff and/or agency notification procedures.
- The operating manual should contain the following information:

  I. General Information
     a. Building function
     b. Building description
     c. Operating standards and logs

  II. Technical Information
     a. System description
     b. Operating routines and procedures
     c. Seasonal start-up and shutdown
     d. Special procedures
     e. Basic troubleshooting

- The maintenance manual should contain the following information:
  I. Equipment data sheets
     a. Operating and nameplate data
     b. Warranty

  II. Maintenance program information
     a. Manufacturer’s installation, operation, and maintenance instructions
     b. Spare parts information
     c. Preventive maintenance actions
     d. Schedule of actions
     e. Action description
     f. History
- Test reports document observed performance during start-up and commissioning.

36. SCAFFOLDING, RIGGING AND HOISTING

A. The Contractor shall furnish all scaffolding, rigging, hoisting, and services necessary for erection and delivery into the premises of any equipment and apparatus furnished. Remove same from premises when no longer required.

37. CLEANING

A. The Contractor shall, at all times, keep the area of his work presentable to the public and clean of rubbish caused by his operations; and at the completion of the work, shall remove all rubbish, all of his tools, equipment, temporary work and surplus materials, from and about the premises, and shall leave the work clean and ready for use. If the Contractor does not attend to such cleaning immediately upon request, the Engineer may cause cleaning to be done by others and charge the cost of same to the responsible Contractor. Each Contractor shall be responsible for all damage from fire which originates in, or is propagated by, accumulations of his rubbish or debris.

B. After completion of all work and before final acceptance of the work, each Contractor shall thoroughly clean all equipment and materials and shall remove all foreign matter such as grease, dirt, plaster, labels, stickers, etc., from the exterior of materials, equipment and all associated fabrication. Pay particular attention to finished area surfaces such as lighting fixture lenses, lamps, reflectors, panels, etc.

38. PAINTING

A. Each fixture device, panel, junction box, etc., that is located in a finished area shall be provided with finish of color and type as selected or approved by the Architect or Engineer. If custom color is required, it shall be provided at no additional cost to the Owner. All other equipment, fixtures or devices located in finished or unfinished areas, that are not required to have or are provided with finish color or coating shall be provided in a prime painted condition, ready to receive finish paint or coating. All galvanized metal in finished areas shall be properly prepared with special processes to receive finish paint as directed and approved by the Architect.

39. INDEMNIFICATION

A. The Contractor shall hold harmless and indemnify the Engineer, employees, officers, agents and consultants from all claims, loss, damage, actions, causes of actions, expense and/or liability resulting from, brought for, or on account of any personal injury or property damage received or sustained by any person, persons, (including third parties), or any property growing out of, occurring, or attributable to any work performed under or related to this contract, resulting in whole or in part from the negligence of the Contractor, any subcontractor, any employee, agent or representative.

40. HAZARDOUS MATERIALS

A. The Contractor is hereby advised that it is possible that asbestos and/or other hazardous materials are or were present in this building(s). Any worker, occupant, visitor, inspector, etc., who encounters any material of whose content they are not certain shall promptly report the existence and location of that material to the Contractor and/or Owner. The Contractor shall, as a part of his work, insure that his workers are aware of this potential and what they are to do in the event of suspicion. He shall also keep uninformed persons from the premises during construction. Furthermore, the Contractor shall insure that no one comes near to or in contact with any such material or fumes therefrom until its content can be ascertained to be non-hazardous.

B. CMTA, Inc., Consulting Engineers, have no expertise in the determination of the presence of hazardous materials. Therefore, no attempt has been made by them to identify the existence or location of any such material. Furthermore, CMTA nor any affiliate thereof will neither offer nor make any recommendations relative to the removal, handling or disposal of such material.

C. If the work interfaces, connects or relates in any way with or to existing components which contain or bear any hazardous material, asbestos being one, then, it shall be the Contractor's sole responsibility to contact the Owner and so advise him immediately.

D. The Contractor by execution of the contract for any work and/or by the accomplishment of any work thereby agrees to bring no claim relative to hazardous materials for negligence, breach of contract, indemnity, or any other such item against CMTA, its principals, employees, agents or consultants. Also, the Contractor further agrees to defend, indemnify and hold CMTA, its principals, employees, agents and consultants, harmless from any such related claims which may be brought by any subcontractors, suppliers or any other third parties.

41. ABOVE-CEILING AND FINAL PUNCH LISTS

A. The Contractor shall review each area and prepare a punch list for each of the subcontractors, as applicable, for at least two stages of the project:

(1) For review of above-ceiling work that will be concealed by tile or other materials well before substantial completion.

(2) For review of all other work as the project nears substantial completion.

B. When <u>all</u> work from the Contractor's punch list is complete at each of these stages and <u>prior</u> to completing ceiling installations (or at the final punch list stage), the Contractor shall request that the Engineer develop a punch list. This request is to be made in writing seven days prior to the proposed date. After all corrections have been made from the Engineer's punch list, the Contractor shall review and initial off on <u>each</u> item. This signed-off punch list shall be submitted to the Engineer. The Engineer shall return to the site <u>once</u> to review each punch list and all work <u>prior to</u> the ceilings being installed and at the final punch list review.

C. If additional visits are required by the Engineer to review work not completed by this review, the Engineer shall be reimbursed directly by the Contractor by check or money order (due net 10 days from date of each additional visit) at a rate of $140.00 per hour for extra trips required to complete either of the above-ceiling or final punch lists.

END OF SECTION 260501

SECTION 26 0502 - SCOPE OF THE ELECTRICAL WORK

1. GENERAL

Each Electrical Contractor's attention is directed to Section 260501 - General Provisions, Electrical, and all other Contract Documents as they apply to his work.

2. SCOPE OF THE ELECTRICAL WORK

The Electrical work for this project includes all labor, materials, equipment, fixtures, excavation, backfill and related items required to completely install, test, verify place in service and deliver to the Owner complete electrical systems in accordance with the accompanying plans and all provisions of these specifications. This work shall primarily include, but is not limited to the following:

A. All conduits, conductors, outlet boxes, fittings, etc.

B. All switchgear, panels, disconnect switches, fuses, transformers, contactors, starters, etc.

C. Electrical power service to existing University of Kentucky owned pad mount transformer. Includes all coordination and concrete encased secondary feeders.

D. Fault Current, Arc Flash and Coordination Studies.

E. All wiring devices and device plates.

F. All light fixtures, drivers, controls, and associated accessories.

G. Site lighting fixtures including poles, bases, and controls.

H. Networked digital meters for all utility services including electric, gas, and water. Report utility usage integrated into University of Kentucky's Delta Room. Include meter testing, calibration, programming, and coordination to interface.

I. Emergency generator and transfer switches. Includes relocation of existing generator, new feeder to reconnect outdoor track emergency power (with associated pull boxes), and new feeder to connect Indoor Track emergency power.

J. Electrical connection to all electrically operated equipment furnished and/or installed by others, including powered casework, overhead doors, etc.

K. Digital video surveillance system. Raceway, network cable, and power.

L. Access Control and Intrusion Detection system. Raceway, network cable, and power. Assume network drop to each door controller location that is local to the doors.

M. Lightning protection system.

N. Wireless Access Ports (WAPs). Raceway, backboxes, cabling. WAP's provided and installed by others.

O. Voice/Data wiring system. Install per UK IT Standards.

P. New ladder tray and network cable conduit.

Q. New telecommunication service entrance with concrete encased duct to service demarcation manhole.

R. Fire alarm system. Include fiber optic interface to connect fire alarm system to University of Kentucky's campus system.

S. Electrified door hardware. Includes all raceway, cabling, and coordination with door hardware Contractor. Reference Div 08 and architectural door hardware sheet schedules for additional information.

T. Power and raceway for overhead doors and associated controls.

U. All necessary coordination with University of Kentucky engineering for electric service, UK IT for telecommunication service, etc. to ensure that work, connections, etc., that they are to provide is accomplished and that service to this facility is delivered complete prior to occupancy.

V. Prior to submitting a bid, the Contractor shall contact all serving utility service contacts at University of Kentucky to determine exactly what each utility company will provide and exactly what is required of the Contractor and the Contractor shall include all such requirements in his base bid.

W. Obtaining, coordinating and paying all necessary fees and costs for permits and inspections required by local, state and federal law. The Contractor shall contact the appropriate agencies prior to submitting a bid to determine exactly these charges will be.

END OF SECTION 26 0502

SECTION 26 0503 - SHOP DRAWINGS, LITERATURE, MANUALS, PARTS LISTS, AND SPECIAL TOOLS

1. SHOP DRAWINGS

A. Each Contractor shall submit to the Architect and/or Engineer, within thirty days after the date of the Contract, seven sets of shop drawings and/or manufacturer's descriptive literature on all equipment required for the fulfillment of his contract. Each shop drawing and/or manufacturer's descriptive literature shall have proper notation indicated on it and shall be clearly referenced so the specifications, schedules, light fixture numbers, panel names and numbers, etc., so that the Architect and/or Engineer may readily determine the particular item the Contractor proposes to furnish. All data and information scheduled, noted or specified by hand shall be noted in color red on the submittals. The Contractor shall make any corrections or changes required and shall resubmit for final review as requested. Review of such drawings, descriptive literature and/or schedules shall not relieve the Contractor from responsibility for deviation from drawings or specifications unless they have, in writing, directed the reviewer's attention to such deviations at the time of submission of drawings, literature and manuals; nor shall it relieve them from responsibility for errors or omissions of any nature in shop drawings, literature and manuals. The term "as specified" will not be accepted.

B. If the Contractor fails to comply with the requirements set forth above, the Architect and/or Engineer shall have the option of selecting any or all items listed in the specifications or on the drawings, and the Contractor will be required to provide all materials in accordance with this list.

C. Review of shop drawings by the Engineer applies only to conformance with the design concept of the project and general compliance with the information given in the contract documents. In all cases, the installing Contractor alone shall be responsible for furnishing the proper quantity of equipment and/or materials required, for seeing that all equipment fits the available space in a satisfactory manner and that piping, electrical and all other connections are suitably located.

D. The Engineer's review of shop drawings, schedules or other required submittal data shall not relieve the Contractor from responsibility for the adaptability of the equipment or materials to the project, compliance with applicable codes, rules, regulations, information that pertains to fabrication and installation, dimensions and quantities, electrical characteristics, and coordination of the work with all other trades involved in this project.

E. No cutting, fitting, rough-in, connections, etc., shall be accomplished until reviewed equipment shop drawings are in the hands of the Contractors concerned. It shall be each Contractor's responsibility to obtain reviewed shop drawings and to make all connections, etc. in the neatest and most workmanlike manner possible. Each Contractor shall coordinate with all the other Contractors having any connections, roughing-in, etc., to the equipment, to make certain proper fit, space coordination, voltage and phase relationships are accomplished.

F. In accord with the provisions specified hereinbefore, shop drawings, descriptive literature and schedules shall be submitted on each of the following indicated items as well as any equipment or systems deemed necessary by the Engineer:

Power Equipment

- Fault current coordination study (submit along with switchgear & panelboards).
- Switchgear and panelboards.
- Circuit breakers or fusible switches, per each type.
- Power and lighting controls.

- Disconnect switches.
- Fuses, per each type required.
- Control components (relays, timers, selector switches, pilots, etc.)
- Building service grounding electrode components.
- Metering devices.
- Emergency transfer switch.
- Lightning protection system.
- Transient voltage surge suppression system.
- Grounding system.

Raceways

- Cable tray and each type of cable tray fitting.
- Wireways and each type of wireway fitting.
- Surface-mounted metal or plastic raceways, with each type of fitting.

Devices

- Each type of wiring device and their coverplates.
- Data/voice/video wallplates, each by type.
- Any special items not listed above.

Lighting

- Light fixtures, each by type, marked to indicate all required accessories and selections. Also provide original color selection chart to allow Architect and/or Engineer to indicate color selection.
- Lighting standards or poles.
- Photocells, time clocks or other lighting accessories.
- Lighting control system schematic, functional & programming data, along with building specific floor plan drawings indicating each device, master controller, input device locations and specific interconnect/wiring requirements for each device.

Systems

- Fire alarm system.
- Intrusion detection system.
- Data network.

Miscellaneous

- Control panel assemblies.
- Non-standard junction/pullboxes.
- Manholes, hand holes, and all outdoor electrical equipment and fittings.

2. SPECIAL WRENCHES, TOOLS AND KEYS

A. Each Contractor shall provide, along with the equipment provided, any special wrenches or tools necessary to dismantle or service equipment or appliances installed by him. Wrenches shall include necessary keys, handles and operators for valves, switches, breakers, etc. and keys to electrical panels, emergency generators, alarm pull boxes and panels, etc. At least two of any such special wrench, keys, etc. shall be turned over to the Architect prior to completion of the project. Obtain a receipt that this has been accomplished and forward a copy to the Engineer.

3. FIRE ALARM SHOP DRAWINGS

A. The Contractor and equipment supplier shall submit to the Architect and/or Engineer, fire alarm system shop drawings complete with catalog cuts, descriptive literature and complete system wiring diagrams for their review prior to the Contractor's submittal to the Commonwealth's Department of Housing, Buildings and Construction or other governing authority for their review. No work shall be done until drawings are approved by the Kentucky Department of Housing, Buildings and Construction.

4. MAINTENANCE AND OPERATION MANUALS

A. Upon substantial completion of the project, the Contractor shall deliver to the Engineers (in addition to the required Shop Drawings) three complete copies of operation and maintenance instructions and parts lists for all equipment provided. Formatting and content shall follow the guidelines outlined in the latest version of ASHRAE Application Handbook, Guideline 4. As a minimum, the following shall be included:

- The **operation and maintenance document directory** should provide easy access and be well organized and clearly identified.
- **Emergency information** should be immediately available during emergencies and should include emergency and staff and/or agency notification procedures.
- **The operating manual** should contain the following information:
  I. General Information
     a. Building function
     b. Building description
     c. Operating standards and logs

  II. Technical Information
     a. System description
     b. Operating routines and procedures
     c. Seasonal start-up and shutdown
     d. Special procedures
     e. Basic troubleshooting

- **The maintenance manual** should contain the following information:
  I. Equipment data sheets
     a. Operating and nameplate data
     b. Warranty

  II. Maintenance program information
     a. Manufacturer's installation, operation, and maintenance instructions
     b. Spare parts information
     c. Preventive maintenance actions
     d. Schedule of actions
     e. Action description
     f. History

- **Test reports** document observed performance during start-up and commissioning.

END OF SECTION 26 0503

SECTION 26 0504 – SLEEVING

1. GENERAL

A. The Contractor shall be responsible for all openings, sleeves, trenches, etc. that he may require in floors, roofs, ceilings, walls, etc. and shall coordinate all such work with the General Contractor and all other trades. He shall determine and coordinate any openings which he is to provide before submitting a bid proposal in order to avoid conflict and disagreement during construction. Improperly located openings shall be reworked at the expense of the responsible Contractor.

B. The Contractor shall plan his work ahead and shall place sleeves, frames or forms through all walls, floors and ceilings during the initial construction, where it is necessary for conduit, buss duct, conductors, wireways, etc. to go through; however, when this is not done, this Contractor shall do all cutting and patching required for the installation of his work, or he shall pay other trades for doing this work when so directed by the Architect. Any damage caused to the building by the workmen of the responsible Contractor must be corrected or rectified by him at his own expense.

C. The Contractor shall cut holes in casework, equipment panels, etc. (if any), as required to pass pipes in and out.

D. The Contractor shall notify other trades in due time where he will require openings of chases in new concrete or masonry. He shall set all concrete inserts and sleeves for his work. Failing to do this, he shall cut openings for his work and patch same as required at his own expense.

E. Openings in slabs and walls shall be cut with core drill. Hammer devices will not be permitted. Edges of trenches and large openings shall be scribe cut with a masonry saw.

F. Cast iron sleeves shall be installed through all walls where pipe enters the building below grade. Sleeves shall be flush with each face of the wall and shall be sufficiently larger than the entering pipe to permit thorough caulking with lead and oakum between pipe and sleeve for waterproofing.

G. In all cases, sleeves shall be at least two pipe sizes larger than nominal pipe diameter.

H. Sleeves passing through roof or exterior wall or where there is a possibility of water leakage and damage shall be caulked water tight for horizontal sleeves and flashed and counter-flashed with lead (4 lb.) or copper and soldered to the piping, lapped over sleeve and properly weather sealed. Any roof penetration shall not void or lessen the warranty in any way.

I. All rectangular or special shaped openings in plaster, stucco or similar materials including gypsum board shall be framed by means of plaster frames, casing beads, wood or metal angle members as required. The intent of this requirements is to provide smooth even termination of wall, floor and ceiling finishes as well as to provide a fastening means for lighting fixtures, panels, etc. Lintels shall be provided where indicated over all openings in bearing walls, etc.

J. No cutting is to be done at points or in a manner that will weaken the structure and unnecessary cutting must be avoided. If in doubt, contact the Architect.

K. The Contractor shall be responsible for properly shoring, bracing, supporting, etc. any existing and/or new construction to guard against cracking, settling, collapsing, displacing or weakening while openings are being made. Any damage occurring to the existing and/or new structures, due to failure to exercise proper precautions or due to action of the elements, shall be promptly and properly made good to the satisfaction of the Architect.

L. All work improperly done or not done at all as required by the Contractor will be performed by others. The cost of this work shall be paid for by the Contractor who is in non-compliance with the Contract.

2. SLEEVES, PLATES AND ESCUTCHEONS

A. The Contractor shall provide and locate all sleeves required for his work before the floors and surface being penetrated are built, otherwise the Contractor shall core drill for conduits where sleeves were not installed, or where incorrectly located. Core drilling is the only acceptable alternative to sleeves. Do not chisel openings. Where sleeves are placed in exterior walls or in slabs on grade, the space between the conduit and the sleeves shall be made completely and permanently water tight.

B. Conduits that penetrates fire and/or smoke rated assemblies shall have sleeves installed as required by the manufacturer of the rating seal used.

C. At all other locations either pipe sleeves or core drilled openings are acceptable.

D. Where thermal expansion does not occur, the wall may be sealed tight to the conduit.

E. Sleeves shall be constructed of 24 gauge galvanized sheet steel with lock seam joints or Schedule 40 pipe. Sleeves in floors shall extend 1" above finished floor level.

F. Fasten sleeves securely in floors, walls, so that they will not become displaced when concrete is poured or when other construction is built around them. Take precautions to prevent concrete, plaster or other materials being forced into the space between pipe and sleeve during construction.

G. In all areas where ducts are exposed and ducts pass thru floors, the opening shall be surrounded by a 4 inch high by 3 inch wide concrete curb.

H. Escutcheon plates shall be provided for all conduit passing thru walls, floors and ceilings. Plates shall be nickel plated, of the split ring type, of size to match the pipe or conduit. Where plates are provided for pipes passing thru sleeves which extend above the floor surface, provide deep recessed plates to conceal the sleeves.

END OF SECTION 26 0504

SECTION 26 0505 - DEMOLITION, RESTORATION AND SALVAGE

1. GENERAL

   A. Drawings and General Provisions of the Contract, including General and Supplementary Conditions and all other divisions of these specifications apply to work specified in this section.

2. DESCRIPTION OF WORK

   A. This section covers all demolition, restoration and salvage required to perform the electrical work indicated on the drawings, specified and/or as required to complete the project. It is the intent of this section of work to remove all existing electrical equipment, materials, etc. which are not required for the completed building and to restore any and all finished surfaces to their original type and conditions. To accomplish these requirements, the Contractor(s) shall, at his own expense, engage the services of others already performing finish work on this project. All work shall be completed to the satisfaction of the Architect/Engineers whose decisions shall be final. This requirement shall apply to all restoration work whether indicated or specified.

3. ELECTRICAL

   A. Where electrical fixtures, equipment or other materials are removed and/or relocated, all abandoned conduit and conductors shall be removed in exposed areas. In concealed areas, materials shall be abandoned in place or removed as indicated and patch all openings.

   B. The Contractor shall be responsible for the removal and/or relocation of any electrical equipment, fixtures, devices, appurtenances, etc., which may, in the course of construction, interfere with the installation of any new and/or relocated Architectural, Mechanical, Electrical, Structural or Fire Protection Systems whether indicated or not.

4. REPAIR

   A. Unless otherwise indicated, the Contractor shall be responsible for the patching and repairing of all holes, etc. in the ceiling, wall and floors where electrical equipment is removed.

5. SALVAGE

   A. It is the intent of this section to deliver to the Owner all components of any electrical system which may be economically reused by him. The Contractor shall make every effort to remove reusable components without damage and deliver them to a location designated by the Owner.

END OF SECTION 26 0505

SECTION 260508 - COORDINATION AMONG TRADES, SYSTEMS INTERFACING AND CONNECTION OF EQUIPMENT FURNISHED BY OTHERS

1. COORDINATION

A. The Contractor is expressly directed to read the General Conditions and all sections of these specifications for all other trades and to study all drawings applicable to his work, including Architectural, Plumbing, Fire Protection, Mechanical and Structural drawings, to the end that complete coordination between trades will be affected. Each Contractor shall make known to all other contractors the intended positioning of materials, raceways, supports, equipment and the intended order of his work. Coordinate all work with other trades and proceed with the installation in a manner that will not create delays for other trades or affect the Owner's operations.

B. Special attention to coordination shall be given to points where raceways, fixtures, etc., must cross other ducts or conduit, where lighting fixtures must be recessed in ceilings, and where fixtures, conduit and devices must recess into walls, soffits, columns, etc. It shall be the responsibility of each Contractor to leave the necessary room for other trades. No extra compensation or time will be allowed to cover the cost of removing fixtures, devices, conduit, ducts, etc. or equipment found encroaching on space required by others.

C. The Contractor shall be responsible for coordination with all trades to insure that they have made provision for connections, operational switches, disconnect switches, fused disconnects, etc., for electrically operated equipment provided under this or any other division of the specifications, or as called for on the drawings. Any connection, circuiting, disconnects, fuses, etc., that are required for equipment operation shall be provided as a part of this contract.

D. If any discrepancies occur between accompanying drawings and these specifications and drawings and specifications covering other trade's work, each trade shall report such discrepancies to the Architect far enough in advance so that a workable solution can be presented. No extra payment will be allowed for relocation of fixtures, devices, conduit, and equipment not installed or connected in accordance with the above instructions.

E. In all areas where air diffusers, devices, lighting fixtures and other ceiling-mounted devices are to be installed, the Mechanical Trade(s) and the Electrical Trade and the General Trades shall coordinate their respective construction and installations so as to provide a combined symmetrical arrangement that is acceptable to the Architect and Engineer. Where applicable, refer to reflected ceiling plans. Request layouts from the Architect or Engineer where in doubt about the potential acceptability of an installation.

2. INTERFACING

Each Electrical Trade, Specialty Controls Trade, Mechanical Trade and the General Trades, etc., shall insure that coordination is affected relative to interfacing of all systems. Some typical interface points are (but not necessarily all):

A. Connection of Telecommunications (voice, video, data) lines to Owner's existing services.

B. Connection of Power lines to Owner's existing services.

C. Connection of all controls to equipment.

D. Electrical power connections to electrically operated (or controlled) equipment.

E. Electrical provisions for all equipment provided by other trades or suppliers within this contract.

F. Connection of power and raceway to door hardware, including overhead doors.

G. Interfacing utility meters to University of Kentucky Campus reporting.

H. Interfacing fire alarm system to University of Kentucky Campus network.

3. CONNECTION OF EQUIPMENT FURNISHED BY OTHERS

A. Each Contractor shall make all connections to equipment furnished by others, whenever such equipment is shown on any part of the drawings or mentioned in any part of the Specifications, unless otherwise specifically specified hereinafter.

B. All drawings are complementary, one trade of the other. It is the Contractor's responsibility to examine all drawings and specifications to determine the full scope of his work. The project Engineers have arranged the specifications and drawings in their given order solely as a convenience in organizing the project, and in no way shall they imply the assignment of work to specific trades, contractors, subcontractors or suppliers.

C. Supervision to assure proper installation, functioning and operation shall be provided by the Contractor furnishing the equipment or apparatus to be connected.

D. Items indicated on the drawings as rough-in only (RIO) will be connected by the equipment supplier or Owner, as indicated. The Contractor shall be responsible for rough-in provisions only as indicated. These rough-ins shall be in accord with the manufacturer's or supplier's requirements.

E. For items furnished by others, relocated, or RIO, the Contractor shall obtain from the supplier or shall field determine as appropriate, the exact rough-in locations and connection sizes for the referenced equipment.

F. The Contractor shall be responsible for coordinating with the General and all other trades, as necessary, to determine any and all final connections that he is to make to equipment furnished by others.

G. The contractor shall obtain and perform work as indicated on equipment manufacture installation drawings. Closely follow all notes and directions. Work indicated to be performed by the Contractor.

END OF SECTION 26 0508

SECTION 26 0519 - CONDUCTORS

1. GENERAL

   A. This section of the Specifications covers all of the electrical power, lighting, and control power (line voltage) conductors, but does not include communications, data or signal system conductors, which are specified separately in these specifications.

   B. All conduits installed without conductors shall have a 200 lb. test nylon string installed for future use, tied off securely at each end.

   C. **No more than 40% conduit fill is permitted for <u>any</u> conduit system, including video, intercom, data, power or other signal circuits unless specifically indicated otherwise on the plans.**

   D. Lighting circuits: No more than five conductors shall be installed in conduit except for switch legs and travelers in multi-point switching arrangements.

   E. Receptacle circuits: If multiple circuits are pulled in a single homerun, a dedicated neutral shall be provided for each phase conductor. In these cases, a maximum of seven conductors are permitted in a single conduit. Conductors shall be derated per N.E.C.

   F. Intentional or unintentional painting of exposed low voltage or line voltage cabling is prohibited. The contractor shall ensure that exposed cabling is adequately protected from direct painting or overspray whether painting is required within the electrical specifications or required by other disciplines/trades. The contractor shall review the painting requirements for all disciplines and shall provide cabling protection as required. Where exposed cabling is being installed in exposed ceiling or wall spaces that are required to be painted, the contractor shall provide alternate options for cable colors and shall provide submittals for such cabling to engineer for approval.

2. MATERIALS

   A. CONDUCTORS

      (1) All conductors shall be 98% conductive annealed copper unless otherwise noted, UL listed and labeled.

      (2) Lighting and receptacle branch circuits shall be not less than No. 12 copper wire or of the sizes shown on the drawings with Type THW, THHN or THWN insulation. All feeder circuits shall be Type THW or THWN of the size as shown on the Contract Drawings. THHN wiring shall only be installed in overhead, dry or damp locations. THWN or THW wiring shall be used for all circuits pulled in underground or other wet locations.

      (3) Conductors No. 12 and smaller sizes of wire shall be solid. Conductors No. 10 and larger sizes shall be stranded.

      (4) Conductors for fire alarm wiring shall be stranded and in full compliance with N.E.C. 760. All fire alarm conductors shall be installed within conduit and enclosed junction boxes.

      (5) All wire on the project shall be new, in good condition, and shall be delivered in standard coils or reels.

(6) The color of the wire shall be selected to conform with Section 210-5 of the latest edition of the National Electrical Code. Refer also to 260519-4, Color Coding.

(7) All equipment grounding conductors shall have green color insulation or if larger than #8, shall be taped for two inches, green color at every termination and pullbox access point.

(8) Conductors used for motor connections and connections to vibrating or oscillating equipment shall be extra flexible.

(9) Conductors for main ground from neutral bus, equipment grounding bus, building steel, grounding grid and main cold water pipe connection shall be bare copper.

(10) All conductors shall be identified by color code and by means of labels placed on conductors in all junction boxes and at each terminal point with Brady, Ideal, T & B or approved equivalent labels indicating source, circuit No. or terminal No.

(11) Branch wiring and feeder conductors that are greater than 100' in length shall be increased at least one size to compensate for voltage drop. All circuits shall be installed and sized for a maximum 2% voltage drop. As calculated using 80% of the supply breaker rating as the load. Adjust conductors and conduit size accordingly for actual field installed conditions.

B. SPLICING DEVICES & CONNECTORS

(1) Splicing devices for use on No. 14 to No. 10 AWG conductors shall be pressure type such as T & B "STA-KON", Burndy, Reliable or approved equivalent.

(2) Wire nuts shall be spring pressure type, insulation 600V, 105°C insulation, up to #8 size. Greater than #6 Cu shall be a compression type connection, 600V insulation, cold shrink tubing, taped to restore full insulation value of the wire being spliced.

(3) Pressure crimp-applied ring type (or fork with upturned ends) terminations shall be employed on motor and equipment terminals where such terminals are provided on motor and equipment leads or on all stranded wire terminations using No. 10 AWG or smaller conductors.

(4) Splices, where necessary, shall be made with hydraulically-set "Hy-press" or equivalent crimped connectors. All splices shall be insulated to the full value of the wiring insulation using a cold-shrink kit or the equivalent in built-up materials.

(5) Large connectors (lugs) at terminals shall be mechanical type, hex-head socket or crimp-on style, installed per the manufacturer's recommendations.

(6) Exterior underground connections made between bare ground wires or to ground rods shall be exothermically welded, "Cadweld" or equivalent.

(7) The use of split-bolt clamps will be permitted in wireways at service entrance only. Torque to 55 foot-pounds or as recommended by manufacturer.

(8) No aluminum conductors shall be used.

3. INSTALLATION

A. The conductors shall be installed in raceway unless specifically noted otherwise.

B. The pulling of all wires and cable on this project shall be performed in strict compliance with applicable sections of the National Electrical Code. No conductor entering or leaving a cabinet or box shall be deflected in such a manner as to cause excess pressure on the conductor insulation. Conductors shall only be installed after insulating bushings are in place.

C. Where allowed, the radius of bending of conductors shall be not less than eighteen times the outside diameter of the conductor insulation or more, if recommended by the manufacturer.

D. Conductors installed within environmental air plenums shall be per N.E.C. Article 800 and other applicable codes, with FEP-type insulation or an approved equivalent. Also provide plenum-rated tie-wraps where plastic straps or other supports, etc., are installed in plenum areas.

E. Where allowed, communications conductors that are installed exposed shall not be routed across ceilings or ductwork. They shall be held up against building structure or against permanent support members. They shall be installed in such a manner that they do not interfere with the access to or operation of equipment or removal of ceiling tiles. Tie-wraps shall be installed in such a manner so as to bundle conductors neatly, allowing runouts of single conductors or groups to drop down to equipment served. Install grommets where dropping out of trays or into panels or service columns. Install sleeves with bushings where penetrating partitions. Firestop sleeves with approved material. Do not penetrate firewalls if so indicated on plans. Refer to the drawings for support requirements and details on routing exposed communications conductors.

F. Conductors for isolated power systems shall be installed in as short a run of conduit as practicable. No pulling soap shall be used on conductors in isolated power systems.

G. Where conductors are installed in industrial facilities, they shall be per J.I.C. standards.

H. Maximum permissible pulling tensions, as recommended by the manufacturer for any given type of cable or wire installed shall not be exceeded. Utilize special remote readout equipment as required to ensure compliance. Use particular caution when installing twisted pair data cable or fiber optic cables -- forces permitted for pulling in are typically very low for these cable types.

I. All cables and wiring, regardless of voltage, installed in manholes or cable vaults shall be routed in such a manner to provide a minimum of 6 feet of slack cable for future splicing. Install cables along walls by utilizing the longer route from entry to exit. If both routes are symmetrical, provide a loop of cable secured to wall. All cables shall be tied to insulated cable supports on wall-mounted racks, spaced a maximum of three feet apart.

4. COLOR CODING DISTRIBUTION VOLTAGE CONDUCTORS, 600 VOLT OR LESS

A. Conductors to be color coded as follows:

(1) 120/208 Volt Conductors
Phase A - Black
Phase B - Red
Phase C - Blue
Neutral - Solid White or White with tracer stripe to match phase conductor

(2) Control Wiring - Red, or as indicated.

(3) Conductors within enclosures that may be energized when enclosure disconnect is off - yellow, or taped with 1/2" yellow tape every 6" of length, inside enclosure. Provide lamacoid plate warning sign on front of enclosure where this condition occurs.

(4) D.C. Wiring - Positive - Light Blue
Negative - Dark Blue

END OF SECTION 26 0519

SECTION 26 0526 - GROUNDING

1. GENERAL

A. All metallic conduit, raceways, cable trays, wireways, supports, cabinets and equipment shall be grounded in accordance with the latest issue of the National Electrical Code, as shown on the Contract Drawings and in accord with the requirements of the local authority having jurisdiction, as applicable.

B. The size of the equipment grounding conductors, grounding electrode conductors and service grounding conductors shall be not less than that given in Article No. 250 of the National Electrical Code, and/or as shown on the Contract Drawings. Where ungrounded conductor sizes are increased to minimize voltage drop, grounded conductor sizes shall be increased in the proper proportion.

C. Grounding bus and non-current carrying metallic parts of all equipment and raceway systems shall be securely grounded by connection to common ground.

D. The service entrance main ground bus shall also be connected to the main cold metallic water pipe within three feet of where it enters the building, on both the house and street sides of the main shut-off valve with a properly sized bonding jumper. A properly sized bonding jumper shall also be provided to the frame of any steel structure utilized in the construction. The steel frame of the building (if any) shall be made electrically continuous.

2. MATERIALS

A. Ground wires and cables shall be of the AWG sizes shown on the Contract Drawings or shall be sized in accord with the prevailing codes. All ground wires and cables shall be copper.

B. All grounding fittings shall be heavy cast bronze or copper of the mechanical type except for underground installations or interconnection of grounding grid to cable, columns and ground electrodes, which shall be thermically welded type as manufactured by Cadweld, Burndy Co., Therm-O-Weld, or approved equivalent. Other bonding clamps or fittings in above ground locations shall be as manufactured by O.A. Co., T & B, Burndy, or approved equivalent.

C. Ground electrode pipe systems shall be solid copper construction. Ground rods shall be 5/8" minimum diameter, eight feet long, copperweld steel. All ground electrode systems shall be installed in accord with manufacturer's recommendations, U.L. listings, National Electrical and National Electrical Safety Codes.

3. INSTALLATION

A. All grounding conductors shall be protected from mechanical injury and shall be rigidly supported. Where ground conductors are run through flexible conduit and through panelboard switchboard or motor control center feeders, they shall be securely bonded to such conduit thru the use of grounding bushings at the entrance and exit. All connection of equipment shall be made with an approved type of solderless connection and same shall be bolted or clamped to equipment or conduit.

B. All equipment grounding conductors to lighting fixtures, devices, receptacles, electric heaters, furnace and other equipment not exceeding No. 8 AWG in size shall be green colored Type "THWN".

C. Equipment ground connections to GFI circuit breakers shall be carried and bonded to each outlet on the circuit. Provide a separate equipment grounding conductor with green color insulation.

D. Resistance to the grounding at the service entrance equipment shall be in accordance with the N.E.C. for style of construction and shall not exceed ten ohms as measured by the described testing method.

E. All circuits shall have a separate grounding conductor, except as otherwise noted.

F. When grounding systems are completely installed and all grading in the area of the service grounding electrode has been completed up to finish elevations, perform a fall-of potential or other approved test to determine actual system resistance to earth. Report results to the Engineer in writing. Refer to testing provisions in this section of specifications.

G. Where separately-derived systems are utilized as part of the power distribution network, the neutral leg of the secondary side of generators, transformers, etc., shall be connected to a grounding electrode in accordance with the manufacturer's recommendations.

H. The Contractor shall ensure that the ground return path thru building structural steel or other means is electrically continuous back to the service grounding electrode and is of adequate capacity and impedance to carry the maximum expected fault or other current. Where no electrically continuous steel building frame is available, the Contractor shall provide a properly sized ground bar and ground conductor routed back to the main facility ground bus.

I. Where a building's steel frame is made electrically discontinuous by masonry breaks (as at firewalls, etc.), the Contractor shall provide an accessible thermically welded bonding jumper of #500MCM copper to bond the building steel frame sections together, making the entire steel frame electrically continuous. The installation of these bonding jumpers shall be reviewed by the Engineer prior to their being covered by construction.

J. Where lightning protection systems are utilized on the work, their electrodes and conductors shall be electrically segregated from the building service ground, except where connections to structural elements are required for the proper installation of these systems. Lightning protection grounds shall only be utilized for lightning grounding applications, in accord with U.L. and manufacturer's recommendations.

K. Grounding connections shall **never** be made to fire protection, natural gas, flammable gas or liquid fuel piping, except where specifically indicated on the plans.

L. Where dielectric fittings are utilized in piping systems, the piping system shall **not** be utilized as a ground path. Bonding jumpers shall not be utilized to bridge over such fittings. Piping systems shall not be utilized as ground paths except where specifically required by codes in the case of water piping.

4. GROUNDING ELECTRODE SYSTEM

A. The ground electrode system shall be as specified herein. The system shall not require maintenance throughout the expected life span of the materials.

B. Ground system shall be an electrolytic rod type, as manufactured by Lyncole XIT Grounding, Superior Grounding Systems, L.E.C., Inc. (Chem-Rod), or approved equivalent. Electrode(s) shall be placed as shown on the plans, installed exactly per manufacturer's recommendations. Electrodes shall be installed vertically, 12 feet of overall length (or length as indicated), set in a drilled hole and backfilled per manufacturer's instructions with a special clay slurry surrounding the rod. Provide a concrete protection box with cast iron grate for the top of the rod termination. Ground system shall be per the following:

(1) Manufacturer: Lyncole XIT Grounding (or approved equivalent).
(2) Source: Lyncole XIT Grounding, 22412 S. Normandie Ave., Torrance, CA 90502 1-800-962-2610
(3) Shaft Configuration: Straight.
(4) Shaft Length: 12 feet (or as otherwise indicated).
(5) Listings: U.L.-467J, ANSI 633.8.
(6) Material: Type K Copper.
(7) Construction: Hollow tube, 2.125" O.D., chemical filled with non-hazardous metallic salts.
(8) Weight 3.5 lbs. per foot of length, nominal.
(9) Ground Wire Termination: Exothermic ("Cadweld" by Contractor) connection to 4/0 conductor, with U-bolt with pressure plate provided as test point.
(10) Average Life Expectancy: 25 Years.
(11) Model Number: K2-(length)CS.
(12) Provide grounding system with the following components: protective box, backfill material. Box to be concrete with cast iron, tamper-resistant lid, backfill to be "Bentonite" clay.

C. Installation of Pipe Ground System

(1) **Pipe ground systems shall be installed exactly as required by the system manufacturer. The Contractor shall be diligent to observe the excavation, sealing tape removal, slurry backfill and all other critical requirements.**

(2) **Note: <u>NEVER</u> USE SAND OR ORDINARY EARTH AS A BACKFILL MATERIAL**

D. Pipe grounding system shall be warranted unconditionally by the Contractor for a period of one year from the date of substantial completion.

5. GROUND TESTING PROCEDURE

A. The actual resistance to earth of the service grounding electrode shall be measured by the Contractor via the fall-of-potential method. This testing shall be accomplished after the grounding electrode has been completely installed and the finished grade is achieved.

B. The results of the testing shall be summarized in a written report by the Contractor, which shall be forwarded to the Engineer for review. The report shall also be included with the operation and maintenance manuals for the Owner's information and future reference. This report is to also contain a detailed description and illustrations of the testing procedure, along with the name and model number of the testing instrument(s).

C. For the actual testing, the Contractor shall follow the procedures outlined below. A self-contained instrument such as a "Megger" or "Ground OHMMETER" shall be used that is designed to eliminate the influence of stray current effects on the accuracy of the measurements.

(1) Connect one side of the instrument to the grounding electrode conductor where it connects to the facility main ground bus (point C1). Disconnect and isolate the grounding electrode conductor for the test.

(2) Drive a copperweld reference electrode probe (point C2) into earth between 300 and 500 feet away from C1 and connect to measurement instrument.

(3) Drive the movable grounding probe (C3) into earth at ten equally spaced intervals, in a straight line between C1 and C2 points and note the E/I=R resistance readings on a graph at each point.

(4) The resistance measurements in OHMS taken from the flat part of the curve shall be averaged to determine the true grounding electrode resistance to earth.

(5) At completion of testing, remove reference electrode C2 and all temporary wiring and connections.

(6) If actual measurements of grounding electrode indicate a resistance greater than five OHMS, contact the Engineer for instructions. If deemed necessary by the Engineer, additional electrodes shall be placed and the measurement process repeated until the desired ground potential achieved.

6. UNIVERSITY OF KENTUCKY BONDING DETAIL

A. Reference the detail below for information related to distribution panel bonding.

260526D01 GROUNDING & BONDING FOR ELECTRICAL SYSTEMS

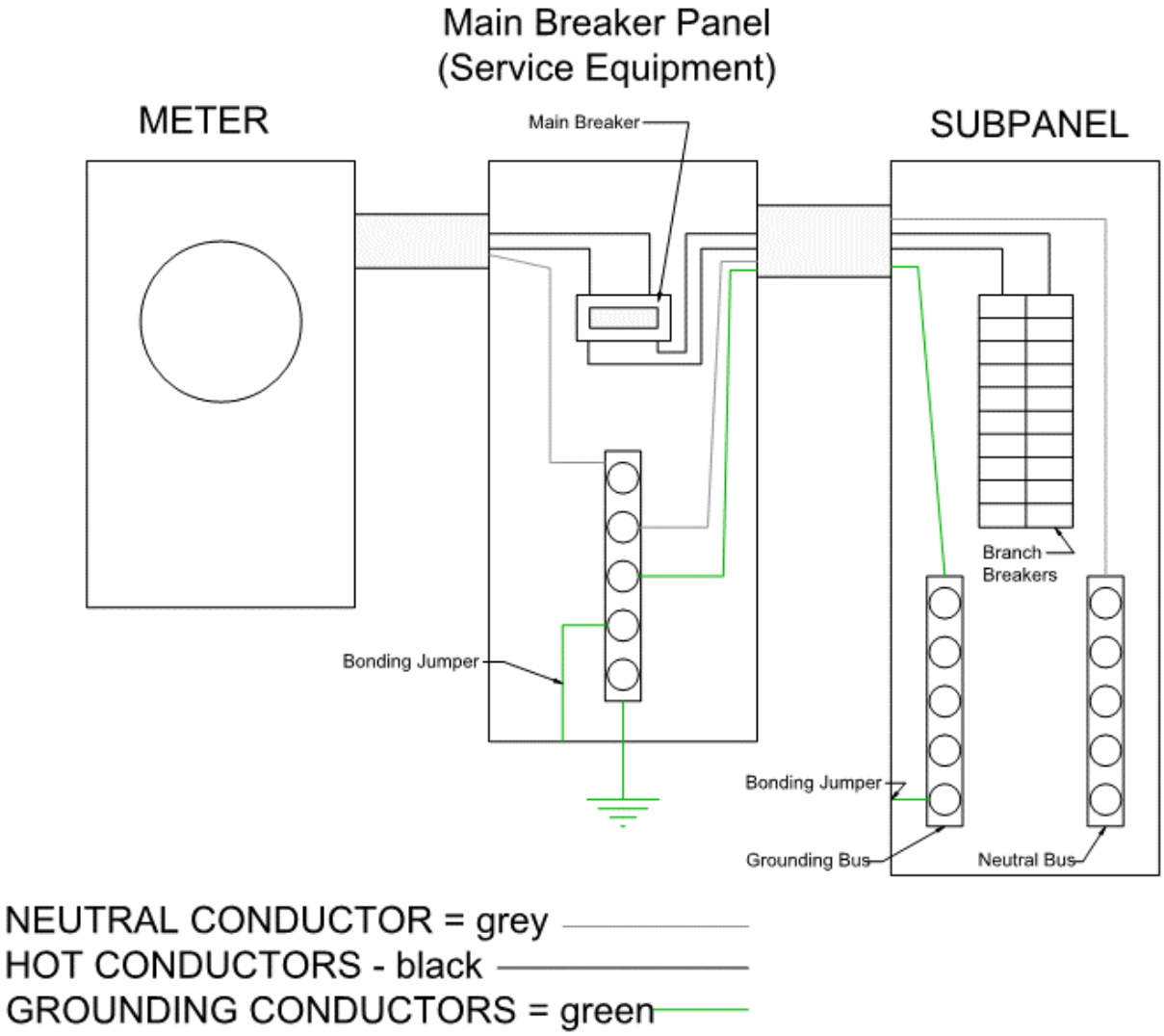

END OF SECTION 26 0526

SECTION 26 0531 - CABINETS, OUTLET BOXES AND PULL BOXES

1. GENERAL

   A. This section of the specifications covers all electrical cabinets, outlet boxes and pull boxes.

   B. Continuous runs of conduit shall have properly sized pull boxes at least each eighty-five feet of run, or as near as possible to that limit.

2. MATERIALS & INSTALLATION

   A. Cabinets, Outlet and Pull Boxes:

      (1) Cabinets for lighting and power, telephone, pull boxes, outlet boxes, or any other purposes specified or shown on the Contract Drawings, shall be constructed of code gauge, galvanized steel with sides formed and corner seams riveted or welded before galvanizing. Boxes assembled with sheet metal screws will not be accepted. Pull boxes shall include all boxes used to reduce the run of conduit to the required number of feet or bends, supports, taps, troughs, and similar applications and shall also be constructed as specified above.

      (2) All cabinets and boxes for NEMA 1 and 1A application shall be provided with knockouts, as necessary, or shall be cut in the field by approved cutting tools which will provide a clean, symmetrically cut opening. All boxes, except panelboards, shall be provided with code gauge fronts with hex head or pan head screw fasteners. Outdoor cabinets shall be hinged cover with pad locking provisions. Fronts for panelboards shall be as specified for panelboards.

      (3) Ceiling outlet boxes shall be galvanized steel, 4" octagonal, not less than 2 1/8" deep, with lugs or ears to secure covers. Those for use with ceiling lighting fixtures shall be fitted with 3/8" fixture studs fastened to the back of the boxes, where applicable. Provide adequate support with at least a 2 x safety factor for the anticipated fixture weight.

      (4) Special size concealed outlet boxes for clocks, speakers, alarms, panels, etc., shall be provided by the manufacturer of the equipment.

      (5) Floor outlet boxes shall be as specified in Section 262726, fully adjustable unless noted or specified otherwise.

      (6) The location of outlets, as shown on the drawings, shall be considered as approximate only. It shall be incumbent upon this Contractor to study the general building drawings, with relation to spaces surrounding each outlet, in order to make his work fit the work of others and in order that when the devices or fixtures are installed, they will be symmetrically located and will not interfere with any other work or equipment. Any change in fixture or layout shall be coordinated with and approved by the Engineer before this change is made. Regardless of the orientation shown on the drawings, all devices shall be easily accessible when installed.

      (7) Boxes installed in fire rated assemblies shall not compromise the rating of the assembly. The Contractor is responsible for identifying assembly ratings and construction requirements prior to rough-in.

         a. Listed single and double gang metallic outlet and switch boxes with metallic or nonmetallic cover plates may be used in bearing and nonbearing wood stud and steel stud walls with rating not exceeding 2 h. The boxes shall be fastened to the studs with the openings in the wallboard facing cut so that the clearance between the boxes and

the wallboard do not exceed 1/8 in. The boxes shall be installed so that the surface area of individual boxes does not exceed 16 sq in, and the aggregate surface area of the boxes do not exceed 100 sq in per 100 sq ft of wall surface unless approved alternate protection materials are used.

b. Boxes located on opposite sides of walls or partitions shall be separated by a minimum horizontal distance of 24 in. This minimum separation distance between the boxes may be reduced when listed Wall Opening Protective Materials are installed according to the requirements of their Classification.

c. Boxes installed on opposite sides of walls or partitions of staggered stud construction shall have listed Wall Opening Protective Materials installed with the boxes in accordance with Classification requirements for the protective materials.

d. All installation shall be done in accordance with AHJ requirements.

(8) All outlets, pull boxes, junction boxes, cabinets, etc., shall be sized per the current edition of the National Electrical Code.

B. Cabinets, outlet boxes and junction or pull boxes shall be threaded for rigid-threaded conduit, dust-tight, vapor-tight or weatherproof as required for areas other than for NEMA 1 or 1A application. These shall be as manufactured by Crouse-Hinds, Appleton, Killark, or approved equivalent.

(1) NEMA 1 or 1A cabinets, outlet boxes or pull or junction boxes shall be as manufactured by Appleton, Steel City, T & B, or approved equivalent.

(2) Outlet boxes for switches, receptacles, telephone, etc., concealed in walls shall be galvanized steel, 4" X 4" X 2" with plaster cover for the number of devices as required. Where outlet boxes are installed in walls of glazed tile, brick, concrete block, or other masonry which will not be covered with plaster or in walls covered by wood wainscot or paneling, <u>deep sectional masonry</u> boxes shall be used and they shall be completely covered with the plates or lighting fixtures. This Contractor shall cooperate with the brick layers, block layers and carpenters to ensure that the outlet boxes are installed straight and snugly in the walls. Receptacles shall be set vertically in walls, unless noted otherwise.

(3) Outlet boxes mounted in glazed tile, brick, concrete block or other types of masonry walls shall be mounted above or below the mortar joint. <u>Do Not Split the Mortar Joint</u>.

(4) Boxes for more than two devices shall be for the number of devices required and shall be one piece. No ganging of single switch boxes will be allowed.

(5) Outlets provided shall have only the holes necessary to accommodate the conduit at the point of installation and shall be rigidly secure in position. Boxes with knockouts removed and openings not used shall be replaced or be provided with a listed knockout closure.

(6) Openings for conduit entrance in cabinets and boxes shall be prefabricated, punched, drilled and/or reamed. The use of a cutting torch for this purpose is prohibited.

END OF SECTION 26 0531

SECTION 26 0533 – RACEWAYS & FITTINGS

1. GENERAL

A. This section is intended to specify the raceways, conduit, conduit fittings, hangers, junction boxes, splice boxes, specialties and related items necessary to complete the work as shown on the drawings and specified herein.

B. This section specifies basic materials and methods and is a part of each Division 26, 27 and 28 that implies or refers to electrical raceways specified therein.

C. The types of raceways specified in this section include the following:

(1) Steel electrical metallic tubing. (E.M.T.)
(2) Rigid galvanized steel conduit. (G.R.S.)
(3) Flexible metal conduit (aluminum or steel)
(4) Liquid - tight flexible metal conduit.
(5) Rigid nonmetallic conduit.
(6) Surface metal raceways.
(7) Wireways, wall ducts and trench ducts.
(8) Cable tray or cable trough.
(9) Duct banks, and their construction.

D. All raceways, as listed in 1C. above and otherwise specified herein shall be provided in compliance with latest editions of all applicable U.L., NEMA, N.E.C. and A.N.S.I. standards. All conduit, raceways and fittings shall be Underwriters Laboratories listed and labeled, or bear the listing of an agency acceptable to the local authority having jurisdiction.

E. Conduit and raceways, as well as supporting inserts in contact with or enclosed in concrete shall comply with the latest edition of all A.C.I. standards and the equipment manufacturer's recommendations for such work.

F. P.V.C. or other non-metallic conduit shall be rated for the maximum operating temperature that could be developed by the conductors it encloses, while in normal operation.

G. The decision of the Engineer shall be final and binding in any case where a question or inquiry arises regarding the suitability of a particular installation or application of raceways, supports or materials, if other than outlined herein.

H. Minimum size of power conduit shall be 3/4" trade size. All conduit and raceways shall be sized for the number of conductors contained, in accord with the latest edition of the National Electrical Code or any other applicable standards. Refer to Division 27 specifications for low voltage conduit requirements.

I. The installer of raceway systems shall avoid the use of dissimilar metals within raceway installations that would result in galvanic-action corrosion.

2. MATERIALS

A. STEEL ELECTRICAL METALLIC TUBING

(1) Electrical metallic tubing, (E.M.T.) of corrosion-resistant steel construction shall be permitted for concealed installation in dry interior locations. Electrical metallic tubing shall not be installed in

concrete slabs or where exposed to physical damage. Electrical metallic tubing shall be permitted for exposed work in mechanical and electrical rooms and other exposed structure areas where not subjected to physical damage, as determined by the Engineer.

B. RIGID GALVANIZED STEEL CONDUIT

(1) Rigid galvanized steel conduit shall be used where subject to physical damage for exposed work in mechanical spaces, within factory or other industrial work areas, for exposed fit-up work on machinery, for exposed exterior damp or wet location work, in hazardous atmospheres, in exterior underground locations where installed beneath roadways, where ells occur in underground P.V.C. conduits, or where turning out of concrete encased duct banks, and at other locations as specifically called out on the drawings.

(2) Rigid galvanized steel conduit shall be used for all building interior power wiring or cables of over 600 Volts.

C. FLEXIBLE METAL CONDUIT

(1) Flexible conduit shall be used where permitted by NEC. It may be constructed of aluminum or steel. It shall be installed with connectors designed for the purpose. All flexible metal conduit shall be installed as a single piece. No joints shall be installed. Flexible conduit shall not be used in wet or dusty locations or where exposed to oil, water or other damaging environments. An equipment grounding conductor or bonding jumper shall be used at all flexible conduit installations. Maximum permitted length of flexible metal conduit shall be 72”, as for light fixture whips unless approved in writing by Engineer.

D. LIQUIDTIGHT FLEXIBLE METAL CONDUIT

(1) Weatherproof flexible metal conduit shall be wound from a single strip of steel, neoprene covered, equivalent to "Liquatite" or "Sealtite" Type "UA". It shall be installed in such a manner that it will not tend to pull away from the connectors. Provide strain relief fittings equivalent to "Kellems" as required where subject to vibration. Flexible connections to motors in dusty areas shall be dust-tight, in areas exposed to the weather - weatherproof.

E. RIGID NON-METALLIC CONDUIT

(1) Rigid non metallic conduit shall be constructed of P.V.C, nominally schedule 40 weight, except where encased in concrete, where it may be "EB" type. If installation will enclose utility company provided conductors, verify exact type required and install in accord with their standards, if more stringent than this specification.

(2) Rigid non-metallic conduit may be used in exterior wet or damp locations where installed underslab or underground. It shall not be run in interior locations, except with special permission from the Engineer for use in corrosive environments, and then only if protected from physical damage. No rigid nonmetallic conduit may be installed in environmental air plenums or cast into above-grade concrete slabs. No rigid nonmetallic conduit may be installed in locations where the ambient temperature might exceed the rating of the raceway.

(3) Where rigid non metallic conduit is placed underground, as for feeder circuits, secondaries or branch circuit runs and where ell is made upward thru a slab on grade, transition the turning ell and the riser to rigid steel conduit to a height of 6" above the concrete slab. Transition may then be made to E.M.T or other approved conduit for remainder of run.

(4) Flexible nonmetallic conduit shall not be used, except by special permission, obtained in writing from the Engineer.

(5) Provide equipment grounding conductors of copper, sized as required by codes, in all circuits installed in rigid nonmetallic raceways.

F. SURFACE METAL RACEWAYS

(1) Surface metal raceways shall be constructed of code gauge corrosion-resistant galvanized steel or aluminum extrusions, and finished in an ivory, buff or grey color as selected by the Architect. Finishes shall be suitable for field painting, prepared by the installing contractor as necessary.

(2) Surface metal raceways, where used as raceways only, shall be sized for the conductors indicated. Nominal minimum size of such raceways shall be equivalent to Wiremold Co. Series #700, or equivalent by Isotrol or other approved manufacturer.

(3) Surface metal raceways to be furnished with integral receptacles shall have Simplex Nema 5-20R outlets spaced on centers as indicated on plans. These shall be Wiremold Co. #2200 Series or equivalent Isotrol or other approved manufacturer.

(4) Surface metal raceways and all components and fittings shall be furnished by a single manufacturer, wherever practical. All trim and cover fittings, flush feed boxes, splices, outlet fittings, etc, necessary for a complete installation shall be provided by the installing contractor. These raceways shall be rigidly mounted with approved fasteners on not to exceed 24" centers in a run, or 6" from ends and on either side of a corner. Refer to plans for notations on exact types of these raceways and outlet configurations.

G. WIREWAYS, WALL DUCT, FLUSH FLOOR TRENCH DUCT

(1) WIREWAYS

a. Wireways of painted steel construction shall be corrosion-resistant, moisture and oil resistant where indicated or necessary. Wireways shall be furnished in norminal sizes of 2 1/2" X 2 1/2", 4" X 4", 6"" X 6", 8" X 8" or 12" X 12", as indicated on plans. Furnish with hinged covers on all runs and removable covers on all fittings, to allow a continuous unobstructed path for conductor installation. Provide knockouts on all runs, unless otherwise indicated or prohibited by codes.

b. Provide wireways with hangers of same manufacturer, installed so as to allow unobstructed access to wireway interior. Install at not to exceed 8'-0" centers, closer as needed at fittings and turns. Use 1/4" rod hangers minimum for up to 4"X4", 3/8" rod minimum up to 8"X8", 1/2" rod minimum for 12" X 12".

c. Wireways shall be equivalent to Square "D" Co. "LD" series, as a minimum standard of construction and quality.

(2) WALL DUCTS

a. Where wall duct type raceways are indicated to be installed flush, they shall be a minimum 3 1/2" deep by 10" wide (or 18" width, as indicated), furnished with screw covers to overlap flange 1" on each side. Covers shall be furnished in nominal 3'-0" lengths. Provide fully grommeted openings or bushed nipples as needed in coverplates to pass cables thru.

Where indicated or required, provide transition fittings between horizontal runs of wireway and wall ducts to properly interface each raceway system.

b. Where wall ducts are installed flush either vertically or horizontally as a collector duct, provide proper blocking and support in stud walls, adding a layer of studs as needed to prevent undercutting major structural elements of walls. Trim flange shall be set tight to wall surface with 1/16" tolerance each way.

c. Wall ducts, if indicated to be surface mounted, shall be furnished with flangeless coverplates.

d. All completed systems shall be provided with a factory prime painted finish, suitable for field finish painting.

e. Wall ducts shall be equivalent to Square D Company "RWT" Series, as a standard of construction and quality.

(3) TRENCH DUCTS

a. Trench duct is to be installed flush with finished concrete floor slab with a vertical tolerance to adjacent surfaces of 1/16" plus or minus. Nominal depth of trench duct shall be adjustable from 2 3/8" to 3 1/2", minimum 12" width unless otherwise noted on plans.

b. Trench duct shall be constructed of code-gauge steel, 14 gauge minimum, with corrosion resistant finish. Surfaces of duct or fittings in contact with concrete shall be painted with two coats of "Asphaltum" or receive equivalent coating or taping prior to placement of concrete.

c. Furnish trench duct with flat turns, riser transition fittings to wall duct or panelboard as shown, concrete tight couplings, internal barriers as required to separate services, reducers, end closers, tees and all other fittings as indicated or required.

d. Furnish coverplates of aluminum, 1/4" thickness minimum, with flush fasteners in nominal 24" lengths. Furnish grommeted openings or nipples with insulated bushings as required. Coverplates shall not deflect more than .085" with application of a 200 pound concentrated load. Any compartment over 16" in width shall have additional coverplate support, to meet the deflection criteria above.

e. Provide (as standard) an aluminum tile trim flange (verify and coordinate with floor finishes). Refer to architectural drawings, where applicable.

f. Trench duct and coverplates shall be equivalent to Square "D" Company RSV/RCP-AL series, as a standard of quality and construction.

H. CABLE TRAY OR CABLE TROUGH

(1) GENERAL REQUIREMENTS FOR CABLE TRAYS

a. If cable trays are identified for use via listing, then follow listing requirements. This may require that all interconnected cable trays be from single manufacturer. Some tray types may not be capable of being interconnected.

1) Cable Trays and Accessories: Identified as defined in NFPA 70 and marked for intended location, application, and grounding.

(a) Source Limitations: Obtain cable trays and components from single manufacturer.

2) Sizes and Configurations: See the Drawings for specific requirements for sizes, and configurations.

3) Structural Performance: See articles for individual cable tray types for specific values for the following parameters:

(a) Uniform Load Distribution: Capable of supporting a uniformly distributed load on the indicated support span when supported as a simple span and tested according to NEMA VE 1.
(b) Concentrated Load: A load applied at midpoint of span and centerline of tray.
(c) Load and Safety Factors: Applicable to both side rails and rung capacities.

I. RACEWAY FITTINGS

(1) Raceway fittings (or condulets) shall be of gray iron, malleable iron or heavy copper-free cast aluminum. They shall be furnished in proper configurations, avoiding excessive plugged openings. Any openings that are left shall be properly plugged. All coverplates shall be gasketed with neoprene or similar approved materials, rated for the environment.

(2) Where required, raceway fittings shall be provided in explosion-proof configurations rated for the atmosphere. Place conduit seal off fittings at each device in accord with applicable codes. Seal off fittings shall be packed with wadding, and poured with an approved non-shrink sealing compound.

(3) Where conduit transitions in a run from a cold to a warm environment, (such as at a freezer, refrigerator or exterior wall) sealoff fittings shall be placed on the warm side immediately at the boundary to prevent migration of condensation within raceway systems.

(4) Expansion fittings shall be provided at all locations where conduits or other raceways cross over expansion joints. Provide copper ground bonding jumpers across expansion fittings.

(5) Conduit bodies, junction boxes and fittings shall be dust tight and threaded for dusty areas, weatherproof for exterior locations and vapor tight for damp areas. Conduit fittings shall be as manufactured by Crouse Hinds, Appleton, Killark or approved equivalent. All surface mounted conduit fittings as with "FS", "FD", "GUB" Types etc., shall be provided with mounting hubs.

(6) Where lighting fixtures, appliances or wiring devices are to be suspended from ceiling outlet boxes, they shall be provided with 3/4" rigid conduit pendants. Outlet boxes shall be malleable iron, provided with self-aligning covers with swivel ball joint and No. 14 gauge steel locking ring. Provide safety chain between building structure and ballast housing of light fixtures for all fixtures, appliances or devices greater than 10 lbs weight. Fixtures shall be installed plumb and level.

(7) Fittings for threaded raceways shall be tapered thread with all burrs removed, reamed ends and cutting oil wiped clean.

(8) Fittings for E.M.T. conduit shall be of the compression type. Conduit stops shall be formed in center of couplings. All EMT connectors and couplings shall be of formed steel construction.

(9) Indentation or die-cast fittings shall <u>not</u> be permitted in any raceway system.

(10) All conduit fittings shall be securely tightened. All threaded fittings shall be engaged seven full threads. Fasteners shall be properly torqued to manufacturer's recommendations.

J. SUPPORTS AND HANGERS

(1) Supports and hangers shall be installed in accord with all applicable codes and standards. They shall be corrosion - resistant, galvanized or furnished with an equivalent protective coating. All electrical raceways shall be hung independently from the building structure with U.L. listed and approved materials. Hangers and supports depending from the support systems of other trades work shall not be permitted, except with specific approval in writing from the Engineer. The use of tie wire for support or fastening of any raceway system is prohibited. Perforated metal tape shall not be used for raceway support.

(2) No raceway shall be installed on acoustic tile ceiling tees, or in any location that will impair the functioning, access or code-required clearances for any equipment or system.

(3) Supports for raceways shall be of materials compatible with the raceway, of malleable iron, spring steel, stamped steel or other approved material. Die-cast fittings are not permitted for supports.

(4) The installing contractor shall provide all necessary supports and braces for raceways, in a rigid and safe installation, complying with all applicable codes.

(5) Individual conduits run on building walls or equipment shall be secured by one hole galvanized malleable iron or stamped steel pipe strap or "minerallac" 2-piece straps. The straps are to be anchored by an approved means such as expansion anchors, toggle bolts, through bolts, etc. Where required by codes or other standards, provide spacers behind mounting clamps to space conduits off walls.

(6) Individual conduits run on building steel shall be secured by means of clamp supports similar and equal to those manufactured by the C.C. Korn Company, Elcen Co., B-Line or approved equivalent. Provide korn clamps, bulb tee clamps, flange clamps, beam clamps, "minerallacs", etc.

(7) Where feasible, vertical and/or horizontal runs of conduit shall be grouped in common hangers on "trapezes" of channel stock as manufactured by "Unistrut" or equivalent, 1-5/8" minimum depth, 12 gauge. Utilize conduit clamps appropriate to the channel.

(8) Channel strut systems for supporting electrical equipment or raceways in outdoor wet or corrosive locations shall be constructed of 12 gauge minimum hot dip galvanized steel with 9/16" diameter holes on 8" centers, with finish coat of paint as manufactured by Unistrut, B-Line, Kindorf, or approved equivalent. In indoor dry locations, factory finish paint will be acceptable.

(9) The minimum diameter of round all-thread steel rods used for hangers and supports shall be 1/4", 20 threads per inch. All-thread rod shall be furnished with a corrosion-resistant finish.

(10) Welding directly on conduit or fittings is not permitted.

(11) Provide riser support clamps for vertical conduit runs. Riser support clamps shall be of heavy gauge steel construction. Install riser support clamps at each floor level penetration, or as otherwise required.

(12) Provide conduit cable support clamps for vertical conductor runs as required or indicated on plans. Clamps to be insulating wedging plug, with malleable iron support ring. Install within properly sized and anchored junction box.

(13) Spring steel clips and fittings such as those manufactured by HITT-Thomas, Caddy-Erico, or approved equivalent, with black oxide finish are permitted in any indoor dry location for concealed work, where acceptable to the local authority having jurisdiction.

3. COLOR

A. Conduit provided on this project shall adhere to the following coloring scheme:
   (1) Life Safety Branch – Yellow
   (2) Normal Branch – White
   (3) Fire Alarm System – Red
   (4) Controls – Green
   (5) Data - Blue

4. INSTALLATION

A. This Contractor shall lay out and install all conduit systems so as to avoid any other service or systems, the proximity of which may prove injurious to the conduit, or conductors which it confines. All conduit systems, except those otherwise specifically shown to the contrary, shall be concealed in the building construction or run above ceilings. Size of all conduit shall as a minimum conform to the National Electrical Code, unless larger size is indicated on the Contract Drawings.

B. No conduit shall be installed in poured concrete slabs except with permission of the structural engineer. All other shall be held below slab. Conduit shall be held at least 6" from flues or hot water pipes.

C. All exposed conduit shall be installed with runs parallel or perpendicular to walls, structural members or intersections of vertical planes and ceilings, with right angle turns consisting of cast metal fittings or symmetrical bends unless otherwise shown. All conduit shall have supports spaced not more than eight feet apart.

D. Conduit shall be installed in such a manner so as to insure against collection of trapped condensation. All runs of conduit shall be arranged so as to be devoid of traps. Trapped conduit runs shall be provided with explosion proof drains at low points. Runs of conduit between junctions shall not have more than the equivalent of three 90º bends.

E. Junction boxes shall be installed so that conduit runs will not exceed 85'.

F. No more than (3) electrical circuits may be housed in a single junction box.

G. Horizontal conduit shall not be installed directly from the side of one junction box to another junction box. The conduit needs to be either installed vertically to each box or from the junction box bottoms at a level lower than 12 inches AFF. See sketch below.

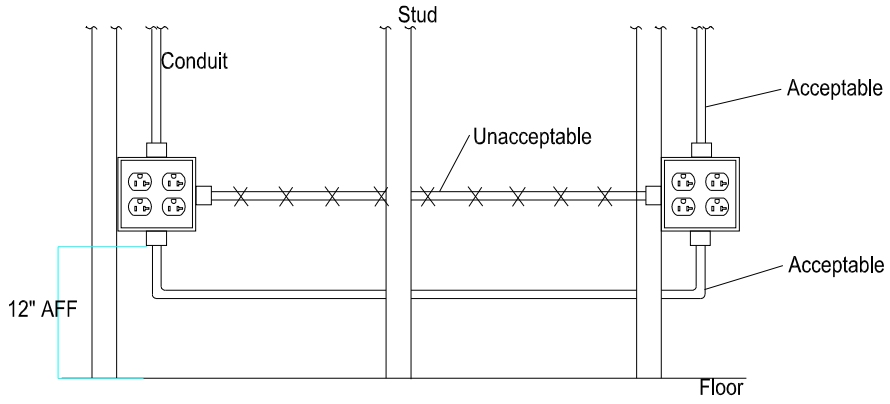

H. All underground or underfloor conduits shall be swabbed free of all moisture and debris before conductors are pulled.

I. At least two 1 inch and four 3/4 inch conduits shall be stubbed from flush-mounted panelboards into the nearest accessible area for future use. Provide suitable closures for these stubs. Identify each stub with a suitable hang tag.

J. Install electrical raceways in accordance with manufacturer's written instructions, applicable requirements of latest edition of the N.E.C., and NECA "Standard of Installation", complying with recognized industry practices.

K. Coordinate with other trades, including metal and concrete deck trades, as necessary to interface installation of electrical raceways and components.

L. Level and square raceway runs, and install at proper elevations and required heights. Hold tight to structure or route through joists webbing wherever possible, to maximize available space and not restrict other trades.

M. Complete installation of electrical raceways before starting installation of cables or wires within raceways.

N. All raceways shall be installed to maintain a minimum of 4” clearance below roof decking.

5. SPECIALTIES

A. All EMT terminations at junction boxes, panels, etc. shall be made with case hardened locknuts and appropriate fittings, with insulated throat liners. Insulating terminations shall be manufactured as a single unit. The use of split sleeve insulators is <u>not</u> permitted.

B. All rigid conduit, except main and branch feeders, shall have heavy fiber insulating bushings reinforced with double locknuts. All branch and main feeders shall have insulated bushings with grounding lugs and shall be bonded to enclosures with appropriately sized copper jumpers, except at

pad mounted transformers. Bonding jumpers shall be installed as required by the N.E.C. and other applicable codes.

C. All conduit stubbed through floor during construction shall have openings protected with plastic caps approved for this purpose. Connections on both ends of all flexible conduit shall be equivalent to Thomas and Betts, Ideal, Appleton, Efcor, or approved equivalent, rated for the environment.

D. All pulling lines left in open conduit systems shall be non-metallic, left securely tied off at each end.

E. Where spare raceways terminate in switchboards or motor control centers a fishtape barrier shall be provided.

6. FIELD QUALITY CONTROL

1) Perform the following tests and inspections:

(a) After installing cable trays and after electrical circuitry has been energized, survey for compliance with requirements.
(b) Visually inspect cable insulation for damage. Correct sharp corners, protuberances in cable trays, vibrations, and thermal expansion and contraction conditions, which may cause or have caused damage.
(c) Verify that the number, size, and voltage of cables in cable trays do not exceed that permitted by NFPA 70. Verify that communications or data-processing circuits are separated from power circuits by barriers or are installed in separate cable trays.
(d) Verify that there are no intruding items such as pipes, hangers, or other equipment in the cable tray.
(e) Remove dust deposits, industrial process materials, trash of any description, and any blockage of tray ventilation.
(f) Visually inspect each cable tray joint and each ground connection for mechanical continuity. Check bolted connections between sections for corrosion. Clean and retorque in suspect areas.
(g) Check for improperly sized or installed bonding jumpers.
(h) Check for missing, incorrect, or damaged bolts, bolt heads, or nuts. When found, replace with specified hardware.
(i) Perform visual and mechanical checks for adequacy of cable tray grounding; verify that all takeoff raceways are bonded to cable trays. Test entire cable tray system for continuity. Maximum allowable resistance is 1 ohm.

END OF SECTION 26 0533

SECTION 260544 - EXCAVATION, TRENCHING, BACKFILLING AND GRADING

1. GENERAL

   A. Each Contractor's attention is directed to Section 260501, General Provisions, Electrical and all other contract documents as they may apply to his work.

   B. Each Contractor shall include all excavating, filling, grading and related items required to complete his work as shown on the drawings and specified herein.

   C. Electrical distribution lines and underground telephone or TV cables shall, in no case, be placed in the same trench with sanitary, storm, domestic or fire protection water lines. Phone cable may, at the Contractor's option, and if acceptable to both utility companies, be placed in a common trench with power lines as long as 8" of earth separation is maintained. T.V. cable shall, in all cases, be placed in a separate trench with two feet separation from electrical power lines.

   D. Depths of bury shall be as indicated on the drawings.

2. SUBSURFACE DATA

   A. Subsurface investigations have been made and the results shown on the drawings. The information was obtained primarily for use in preparing foundation design. Each Contractor may draw his own conclusions therefrom. No responsibility is assumed by the Owner for subsoil quality or conditions other than at the locations and at the time investigations were made. No claim for extra compensation, or for extension of time, will be allowed on account of subsurface conditions inconsistent with the data shown.

   B. Materials to be excavated shall be <u>unclassified</u>, and shall include earth, rock, or any other material encountered in the excavation to the depth and extent indicated on the drawings and specified herein. No adjustment in the Contract sum will be made on account of the presence or absence of rock, shale, or other materials encountered in the excavating.

3. BENCH MARKS AND MONUMENTS

   A. Maintain carefully all bench marks, monuments and other referenced points. If disturbed or destroyed, replace as directed.

4. EXCAVATION

   A. Each Contractor shall accept the site as he finds it and remove all trash, rubbish and material from the site prior to starting excavation for his work.

   B. Excavate trenches to sufficient width and depth for proper installation of the work and where required, smooth the bottom on the trench with hand tools.

   C. The removal of rock shall be accomplished by use of hand or power tools only. Blasting shall not be permitted unless authorized in writing by the Architect. Any damage to existing structures, exterior services or rock intended for bearing, shall be corrected at the responsible Contractor's expense.

   D. Keep trenches free from water while construction therein is in progress. Under no circumstances lay conduit or cable in water. Pumping or bailing water from this Contractor's trenches, which is required during construction shall be accomplished at his expense.

E. In no case shall excavation work be accomplished that will damage in any way the new structure, existing structures, equipment, etc. Each Contractor shall take the necessary steps to prevent flow of eroded earth by water or landslide onto the property of others, or against the structures. The repair of all such damage, or any other damage incurred in the course of excavation, shall be borne by the responsible Contractor.

5. BACKFILL

A. Backfill shall be accomplished with clean debris free earth and the new earth tamped at 12" intervals so as to avoid earth sinks along the trench. The responsible Contractor will be required to return to the project and fill any sunken areas along the route of his work.

B. Backfill trenches only after conduit and cable have been inspected, tested, and locations of pipe lines have been recorded on "as-built" drawings.

C. The backfill below paved areas shall be brought to proper grade to receive the sub-base and paving. No paving shall be placed on uncompacted fill.

D. The backfill below sodded or seeded areas shall be brought to within six inches of finished grade. The remaining six inches shall be backfilled with clean soil.

END OF SECTION 26 0544

SECTION 26 0553 - IDENTIFICATIONS FOR ELECTRICAL SYSTEMS

PART 1 - GENERAL

1.1 RELATED DOCUMENTS

A. Drawings and general provisions of the Contract, including General, Special and Supplementary Conditions and Division 01 Specification Sections, apply to this Section.

B. All materials and installation shall comply with University construction standards. These standards are available at: http://www.uky.edu/EVPFA/Facilities/CPMD/standards/div00/div00.htm. Special attention shall be given to Divisions 02, 26 and 27. In the event of a conflict between these standards and the Contract Documents the most stringent requirement shall be met.

C. The Contractor is directed to examine each and every section of these specifications, all drawings relating to the Contract Documents, any and all Addenda, etc., for work described elsewhere that may relate to the provision of the work described herein. Materials and performance requirements are specified elsewhere herein that relate to these systems.

D. Each Electrical Contractor's attention is directed to Section 260501 - General Provisions, Electrical, and all other Contract Documents as they apply to his work.

1.2 SUMMARY

A. Section Includes:

1. Identification for raceways.
2. Identification of power and control cables.
3. Identification for conductors.
4. Underground-line warning tape.
5. Warning labels and signs.
6. Instruction signs.
7. Equipment identification labels.
8. Miscellaneous identification products.

1.3 DEFINITIONS AND ABBREVIATIONS

A. T - Transformer

B. SWGR – Switchgear. Electrical switching gear which consists of cam operated knife switches that can be operated either manually or electrically or both with amperage capacities greater than 1000 amps.

C. SWBD – Switchboard. Electrical distribution boards which contain 3 phase, stored-energy breakers which distribute power to other distribution panels or directly to large loads.

D. ATS - Automatic Transfer Switch. Stand-alone electrical transfer switches which maintain power to critical building loads. In the event of a loss of normal power, these switches will start the associated emergency generator and switch its load's power feed to the generator.

E. MCC - Motor Control Center. Electrical distribution boards which house the electrical controllers for the loads which they feed. Example loads are usually fans and pumps.

F. DP - Distribution Panel. Electrical distribution panel which is an integral part of a switchboard or switchgear but has its own isolation circuit breaker.

G. P – Panel. Electrical distribution panels with manually operated circuit breakers which feed other distribution panels or directly to loads. These are generally the last distribution panel before the load.

H. N - Normal power system. Annotates that the associated component is part of the Normal Power distribution system and receives no backup power from the Emergency Power distribution system.

I. E - Emergency power system. Annotates that the associated component is part of the Normal Power and Emergency Power distribution systems. In the event of a loss of the supply from the normal power system, the component will receive power from the emergency power system.

J. BKR – Breaker. Switch which interrupts or establishes power flow to its associated load.

K. DISC - Disconnect Switch. Manually operated knife switch which interrupts or establishes power flow to its associated load.

1.4 ACTION SUBMITTALS

A. Product Data: For each electrical identification product indicated.

B. Samples: For each type of label and sign to illustrate size, colors, lettering style, mounting provisions, and graphic features of identification products.

C. Identification Schedule: An index of nomenclature of electrical equipment and system components used in identification signs and labels.

1.5 COORDINATION

A. Coordinate identification names, abbreviations, colors, and other features with requirements in other Sections requiring identification applications, Drawings, Shop Drawings, manufacturer's wiring diagrams, and the Operation and Maintenance Manual; and with those required by codes, standards, and 29 CFR 1910.145. Use consistent designations throughout Project.

B. Coordinate installation of identifying devices with completion of covering and painting of surfaces where devices are to be applied.

C. Coordinate installation of identifying devices with location of access panels and doors.

D. Install identifying devices before installing acoustical ceilings and similar concealment.

PART 2 - PRODUCTS

2.1 FLOOR MARKING TAPE

A. 2-inch wide, 5-mil pressure-sensitive vinyl tape, with black and white stripes and clear vinyl overlay.

2.2 WARNING LABELS AND SIGNS

A. Comply with NFPA 70 and 29 CFR 1910.145.

B. Self-Adhesive Warning Labels: Factory-printed, multicolor, pressure-sensitive adhesive labels, configured for display on front cover, door, or other access to equipment unless otherwise indicated.

C. Baked-Enamel Warning Signs:

1. Preprinted aluminum signs, punched or drilled for fasteners, with colors, legend, and size required for application.
2. 1/4-inch grommets in corners for mounting.
3. Nominal size, 7 by 10 inches.

D. Metal-Backed, Butyrate Warning Signs:

1. Weather-resistant, nonfading, preprinted, cellulose-acetate butyrate signs with 0.0396-inch galvanized-steel backing; and with colors, legend, and size required for application.
2. 1/4-inch grommets in corners for mounting.
3. Nominal size, 10 by 14 inches.

E. Warning label and sign shall include, but are not limited to, the following legends:

1. Multiple Power Source Warning: "DANGER - ELECTRICAL SHOCK HAZARD - EQUIPMENT HAS MULTIPLE POWER SOURCES."
2. Workspace Clearance Warning: "WARNING - OSHA REGULATION - AREA IN FRONT OF ELECTRICAL EQUIPMENT MUST BE KEPT CLEAR FOR 36 INCHES”

2.3 INSTRUCTION SIGNS

A. Engraved, laminated acrylic or melamine plastic, minimum 1/16 inch thick for signs up to 20 sq. inches and 1/8 inch thick for larger sizes.

1. Engraved legend with black letters on white face.
2. Punched or drilled for mechanical fasteners.
3. Framed with mitered acrylic molding and arranged for attachment at applicable equipment.

B. Adhesive Film Label: Machine printed, in black, by thermal transfer or equivalent process. Minimum letter height shall be 3/8 inch.

C. Adhesive Film Label with Clear Protective Overlay: Machine printed, in black, by thermal transfer or equivalent process. Minimum letter height shall be 3/8 inch. Overlay shall provide a weatherproof and UV-resistant seal for label.

2.4 EQUIPMENT IDENTIFICATION LABELS

A. Self-Adhesive, Engraved, Laminated Acrylic or Melamine Label: Adhesive backed, with white letters on a dark-gray background. Minimum letter height shall be 3/8 inch (10 mm).

B. Engraved, Laminated Acrylic or Melamine Label: Punched or drilled for screw mounting. White letters on a dark-gray background. Minimum letter height shall be 3/8 inch (10 mm).

C. Retain paragraph below to specify type of label for identifying outdoor equipment if specified in "Identification Schedule" Article.

D. Stenciled Legend: In nonfading, waterproof, [black] <Insert color> ink or paint. Minimum letter height shall be [1 inch (25 mm)] <Insert dimension>.

2.5 CABLE TIES

A. UV-Stabilized Cable Ties: Fungus inert, designed for continuous exposure to exterior sunlight, self extinguishing, one piece, self locking, Type 6/6 nylon.

1. Minimum Width: 3/16 inch.
2. Tensile Strength at 73 deg F (23 deg C), According to ASTM D 638: 12,000 psi.
3. Temperature Range: Minus 40 to plus 185 deg F (Minus 40 to plus 85 deg C).
4. Color: Black.

B. Plenum-Rated Cable Ties: Self extinguishing, UV stabilized, one piece, self locking.

1. Minimum Width: 3/16 inch (5 mm).
2. Tensile Strength at 73 deg F (23 deg C), According to ASTM D 638: 7000 psi.
3. UL 94 Flame Rating: 94V-0.
4. Temperature Range: Minus 50 to plus 284 deg F (Minus 46 to plus 140 deg C).
5. Color: Black.

2.6 MISCELLANEOUS IDENTIFICATION PRODUCTS

A. Paint: Comply with requirements in Division 09 painting Sections for paint materials and application requirements. Select paint system applicable for surface material and location (exterior or interior).

B. Fasteners for Labels and Signs: Self-tapping, stainless-steel screws or stainless-steel machine screws with nuts and flat and lock washers.

PART 3 - EXECUTION

3.1 INSTALLATION

A. Verify identity of each item before installing identification products.

B. Location: Install identification materials and devices at locations for most convenient viewing without interference with operation and maintenance of equipment.

C. Apply identification devices to surfaces that require finish after completing finish work.

D. Self-Adhesive Identification Products: Clean surfaces before application, using materials and methods recommended by manufacturer of identification device.

E. Attach signs and plastic labels that are not self-adhesive type with mechanical fasteners appropriate to the location and substrate.

F. Cable Ties: For attaching tags.

1. Plenum rated.
2. Outdoors: UV-stabilized nylon.

G. Painted Identification: Comply with requirements in Division 09 painting Sections for surface preparation and paint application.

3.2 SCOPE OF WORK

A. Equipment, disconnect switches, switchgear, switchboards, panelboards, transformers, motor starters, variable frequency drives, special device plates, and similar materials shall be clearly marked as to their function and use. Markings shall be applied neatly and conspicuously to the front of each item of equipment with 1/2" black lamacoid plate (or equivalent) with white letters 1/4" high unless otherwise specified.

B. All receptacle cover plates shall be marked with their panel and circuit number with clear, machine, printed adhesive labels. Circuit number shall also be hand written inside outlet box with black permanent marker.

C. The Contractor shall provide clearly legible typewritten directories in each electrical panel indicating the area, item of equipment, etc. controlled by each switch, breaker, fuse, etc. These directories are to be inserted into plastic cardholders on back door in each panel. Descriptions to be approved by the Owner.

1. EXAMPLE:

a. LIGHTS, ROOM 100
b. RECEPTION, ROOM 200

D. Branch circuit panelboards and switch gear shall be provided with a black lamacoid plastic plate with 1/2" white letters for panel designation and 1/4" white letters showing voltage and feeder information. Branch circuit switches shall be designated as to function. Panelboard and switchgear labels shall indicate the source they are fed from, and the circuit number at that source. Clearly indicate the exact label legend to be furnished with each panelboard and switchgear on the shop drawings for each item of equipment prior to submission of shop drawings. Refer to drawings for details.

E. Where branch circuit panelboards and switchgear are connected to an emergency source, the lamacoid plate shall be red, and the word "emergency" shall be incorporated into the legend. In health care applications, the NEC - designated branch (life safety, critical or equipment branch) shall also be incorporated into the legend, all in ¼" letters. Also provide similar plates and legends for automatic transfer switches, as appropriate. Refer to drawings for details.

F. Lamacoid plates shall be located at center of top of trim for branch circuit panels, switch gear, and centered at side for branch circuit switches. Fasten with self-tapping stainless steel screws or other approved method.

G. Verify identity of each item before installing identification products

H. Identification shall consist of all UPPER CASE LETTERS.

I. Location: Install identification materials and devices at locations for most convenient viewing without interference with operation and maintenance of equipment.

J. Apply identification devices to surfaces that require finish after completing finish work.

K. Self-Adhesive Identification Products: Clean surfaces before application, using materials and methods recommended by manufacturer of identification devices.

L. Attach signs and plastic labels that are not self-adhesive type with mechanical fasteners appropriate to the location and substrate.

M. Underground-Line Warning Tape: During backfilling of trenches install continuous underground-line warning tape directly above line at 6 to 8 inches below finished grade. Use multiple tapes where width of multiple lines installed in a common trench or concrete envelope exceeds 16 inches overall.

N. Fire alarm system: Install a nameplate on the fire alarm panel to indicate the panelboard and circuit number supplying the fire alarm system.

O. Concealed Raceways, Duct Banks, More Than 600 V, within Buildings: Tape and stencil 4-inch wide black stripes on 10-inch centers over orange background that extends full length of raceway or duct and is 12 inches wide. Stencil legend "DANGER CONCEALED HIGH VOLTAGE WIRING" with 3-inch high black letters on 20-inch centers. Stop stripes at legends. Apply to the following finished surfaces:

1. Floor surface directly above conduits running beneath and within 12 inches (300 mm) of a floor that is in contact with earth or is framed above unexcavated space.
2. Wall surfaces directly external to raceways concealed within wall.
3. Accessible surfaces of concrete envelope around raceways in vertical shafts, exposed in the building, or concealed above suspended ceilings.

P. Accessible Raceways, More Than 600 V: Self-adhesive vinyl labels. Install labels at 10-foot maximum intervals.

Q. Accessible Raceways and Cables within Buildings: Identify the covers of each junction and pull box of the following systems with self-adhesive vinyl labels with the wiring system legend and system voltage. System legends shall be as follows:

1. Emergency Power.
2. Power.
3. UPS.

R. Install instructional sign including the color-code for grounded and ungrounded conductors using adhesive-film-type labels.

S. Locations of Underground Lines: Identify with underground-line warning tape for power, lighting, communication, and control wiring and optical fiber cable.

T. Workspace Indication: Install floor marking tape to show working clearances in the direction of access to live parts. Workspace shall be as required by NFPA 70 and 29 CFR 1926.403 unless otherwise indicated. Do not install at flush-mounted panelboards and similar equipment in finished spaces.

U. Warning Labels for Indoor Cabinets, Boxes, and Enclosures for Power and Lighting: Self-adhesive warning labels

1. Comply with 29 CFR 1910.145.
2. Identify system voltage with black letters on an orange background.
3. Apply to exterior of door, cover, or other access.
4. For equipment with multiple power or control sources, apply to door or cover of equipment including, but not limited to, the following:
    a. Power transfer switches.
    b. Controls with external control power connections.

V. Operating Instruction Signs: Install instruction signs to facilitate proper operation and maintenance of electrical systems and items to which they connect. Install instruction signs with approved legend where instructions are needed for system or equipment operation.

W. Emergency Operating Instruction Signs: Install instruction signs with white legend on a red background with minimum 3/8-inch high letters for emergency instructions at equipment used for power transfer and load shedding.

X. Equipment Identification Labels: On each unit of equipment, install unique designation label that is consistent with wiring diagrams, schedules, and the Operation and Maintenance Manual. Apply labels to disconnect switches and protection equipment, central or master units, control panels, control stations, terminal cabinets, and racks of each system. Systems include power, lighting, control, communication, signal, monitoring, and alarm systems unless equipment is provided with its own identification.

Y. Labeling Instructions:

1. Indoor Equipment: Engraved, laminated acrylic or melamine label. Unless otherwise indicated, provide a single line of text with 1/2-inch high letters on 1-1/2-inch high label; where two lines of text are required, use labels 2 inches high.
2. Outdoor Equipment: Engraved, laminated acrylic or melamine label.
3. Elevated Components: Increase sizes of labels and letters to those appropriate for viewing from the floor.
4. Unless provided with self-adhesive means of attachment, fasten labels with appropriate mechanical fasteners that do not change the NEMA or NRTL rating of the enclosure.

Z. All nomenclature on lamacoid labeling shall be per University of Kentucky Standards as shown below:

1. Any label that belongs to equipment within the emergency power subsystem shall be RED with white lettering. All other labels shall be BLACK with white lettering. Additionally, all labels will have at least two lines—one designating the component name and the other designating the component's power source. In the case of a component with multiple feeds, there shall be separate line for each power source component name.
2. UK Equipment Naming Convention:

Format:
The components will be labeled using the following format:

ID: Building/Floor/Room/System/Subsystem/Component
Fed from: Building/Floor/Room/System/Subsystem/Component/

Each field has a specified number of characters and is defined as follows:

Building (4 numeric characters) => the building number, as defined by the university, in which the system is in.

Floor (2 characters) => the floor on which the component is located; use "0G" for the ground floor and "SB" for the sub-basement.

Room (up to 5 capitalized characters) => the room in which the component is located; if component is in a corridor use "CORR".

System (up to 3 capitalized characters) => the system to which the component belongs (in this case it will be EDS for electrical distribution system).

Subsystem (up to 3 capitalized characters) => the subsystem to which the component belongs (in this case it will be Normal (N) or Emergency (E)).

Component (up to 5 capitalized alpha and/or numeric characters) => the component sequence number given to the component to distinguish it from other components in the system.

Examples:

A typical distribution panel on the second floor of the main hospital in room H-201 might be labeled 0293/02/H201/EDS/N/P-1.

A motor control center in the penthouse of the Combs building might be labeled 0096/04/PH/EDS/N/MCC-1.

A breaker on the main switchboard in N-19 might be labeled as 0293/07/PH/EDS/N/MCC2 for the load designation and 0293/0G/N19/EDS/N/SWBD3/BKR-3 for the source designation.

NOTE: The component identification number, or sequence number, is just a simple numbering of similar equipment on the same floor numbered from left to right as seen on the electrical distribution riser diagram provided by the architects. Therefore, it is important to note the building and floor when referring to a component to determine its location. If the components to be labeled are existing equipment or new equipment in an existing building, the component sequence number should be obtained from the appropriate electrical systems supervisor. If the equipment is being installed as part of a new building construction project, then the contractor may determine the sequence numbers.

END OF SECTION 26 0553

SECTION 26 0573 - ELECTRICAL STUDIES

PART 1 - GENERAL

1.1 RELATED DOCUMENTS

A. Drawings and general provisions of the Contract, including General, Special and Supplementary Conditions and Division 01 Specification Sections, apply to this Section.

B. All materials and installation shall comply with University construction standards. These standards are available at: http://www.uky.edu/EVPFA/Facilities/CPMD/standards/div00/div00.htm. Special attention shall be given to Divisions 02, 26 and 27. In the event of a conflict between these standards and the Contract Documents the most stringent requirement shall be met.

C. The Contractor is directed to examine each and every section of these specifications, all drawings relating to the Contract Documents, any and all Addenda, etc., for work described elsewhere that may relate to the provision of the work described herein. Materials and performance requirements are specified elsewhere herein that relate to these systems.

D. Each Electrical Contractor's attention is directed to Section 260501 - General Provisions, Electrical, and all other Contract Documents as they apply to his work.

1.2 SUMMARY

A. This Section includes computer-based, fault-current, arc flash and overcurrent protective device coordination studies. Protective devices shall be set based on results of the protective device coordination study.

B. Electrical Studies shall be performed by the Low-Voltage Switchboard manufacturer. All Electrical Studies required by this specification shall be completed within five (5) weeks from award of project. The Electrical Contractor shall provide all required data to Low-Voltage Switchboard manufacturer within one (1) week and the manufacturer will have four (4) weeks to complete the studies.

C. A licensed professional engineer employee of the Low-Voltage Switchboard manufacturer shall provide electrical power system studies for the project using the latest version of one of the approved software packages. The software model files shall be submitted with the report. The analysis shall follow the latest IEEE 1584 guidelines. An example report will be provided by the university upon request.

D. Studies specified herein must be submitted and approved prior to release of any affected equipment. Revisions to equipment or devices necessary to meet study recommendations shall be at the Manufacturer’s expense.

E. All adjustments and settings recommended by these studies shall be made prior to any testing.

F. The analysis shall be submitted to the engineer of record prior to receiving final approval of the distribution equipment shop drawings and/or prior to release of equipment drawings for manufacturing.

1.3 SUBMITTALS

A. Product Data: For computer software program to be used for studies.

B. Product Certificates: For coordination-study and fault-current-study computer software programs, certifying compliance with IEEE 399.

C. Qualification Data: For coordination-study specialist.

D. Other Action Submittals: The following submittals shall be made after the approval process for system protective devices has been completed. Submittals shall be in digital form.

1. Coordination-study input data, including completed computer program input data sheets.

2. Study and Equipment Evaluation Reports.
3. Coordination-Study Report.

E. Closeout: The study model and data files shall be submitted for the Owners use after all review comments are addressed. **These files must be provided in SKM readable formatting suitable for editing by the Owners software.**

1.4 QUALITY ASSURANCE

A. Studies shall use computer programs that are distributed nationally and are in wide use. Software algorithms shall comply with requirements of standards and guides specified in this Section. Manual calculations are not acceptable.

B. Coordination-Study Specialist Qualifications: An entity experienced in the application of computer software used for studies, having performed successful studies of similar magnitude on electrical distribution systems using similar devices.

1. Professional engineer, licensed in the state where Project is located, shall be responsible for the study. All elements of the study shall be performed under the direct supervision and control of engineer.

C. Comply with IEEE 242 for short-circuit currents and coordination time intervals.

1.5 Commissioning

A. This section specifies a system or a component of a system being commissioned as defined in Section 019113 Commissioning. Testing of these systems is required, in cooperation with the Owner and the Commissioning Authority. Refer to Section 019113 Commissioning for detailed commissioning requirements.

PART 2 - PRODUCTS

2.1 COMPUTER SOFTWARE DEVELOPERS

A. Computer Software Developers: Subject to compliance with requirements, provide products by SKM Systems Analysis, Inc.

2.2 COMPUTER SOFTWARE PROGRAM REQUIREMENTS

A. Comply with IEEE 399.

B. Analytical features of fault-current-study computer software program shall include "mandatory," "very desirable," and "desirable" features as listed in IEEE 399.

C. Computer software program shall be capable of plotting and diagramming time-current-characteristic curves as part of its output. Computer software program shall report device settings and ratings of all overcurrent protective devices and shall demonstrate selective coordination by computer-generated, time-current coordination plots.

PART 3 - EXECUTION

3.1 EXAMINATION

A. Examine Project overcurrent protective device submittals for compliance with electrical distribution system coordination requirements and other conditions affecting performance.

3.2 POWER SYSTEM DATA

A. Gather and tabulate the following input data to support coordination study:

1. Product Data for overcurrent protective devices specified in other Division 26 Sections and involved in overcurrent protective device coordination studies. Use equipment

designation tags that are consistent with electrical distribution system diagrams, overcurrent protective device submittals, input and output data, and recommended device settings.

2. Impedance of utility service entrance.
3. Electrical Distribution System Diagram: In hard-copy and electronic-copy formats, showing the following:
    a. Circuit-breaker and fuse-current ratings and types.
    b. Relays and associated power and current transformer ratings and ratios.
    c. Transformer kilovolt amperes, primary and secondary voltages, connection type, impedance, and X/R ratios.
    d. Generator kilovolt amperes, size, voltage, and source impedance.
    e. Cables: Indicate conduit material, sizes of conductors, conductor material, insulation, and length.
    f. Busway ampacity and impedance.
    g. Motor horsepower and code letter designation according to NEMA MG 1.
4. Data sheets to supplement electrical distribution system diagram, cross-referenced with tag numbers on diagram, showing the following:
    a. Special load considerations, including starting inrush currents and frequent starting and stopping.
    b. Transformer characteristics, including primary protective device, magnetic inrush current, and overload capability.
    c. Motor full-load current, locked rotor current, service factor, starting time, type of start, and thermal-damage curve.
    d. Generator thermal-damage curve.
    e. Ratings, types, and settings of utility company's overcurrent protective devices.
    f. Special overcurrent protective device settings or types stipulated by utility company.
    g. Time-current-characteristic curves of devices indicated to be coordinated.
    h. Manufacturer, frame size, interrupting rating in amperes rms symmetrical, ampere or current sensor rating, long-time adjustment range, short-time adjustment range, and instantaneous adjustment range for circuit breakers.
    i. Manufacturer and type, ampere-tap adjustment range, time-delay adjustment range, instantaneous attachment adjustment range, and current transformer ratio for overcurrent relays.
    j. Panelboards, switchboards, motor-control center ampacity, and interrupting rating in amperes rms symmetrical.

B. Data shall be obtained for the power sources (campus 12 kV system and generators), impedance components (transformers, cables and busway), overcurrent protective devices (fuses, circuit breakers and relays) and other relevant equipment such as automatic transfer switches. Cable data (length, quantity per phase, size and type) shall be provided by the electrical contractor. Assumptions should only be used when the actual data is not available and the assumptions should be clearly listed in the report. Assumptions shall be kept to a minimum.

C. Where appropriate, the analysis shall use the following data for the starting point of the analysis at 12,470-V.

	Short Circuit Analysis and Arc Flash - High Scenario		Arc Flash - Low Scenario	
	Contribution (A)	X/R	Contribution (A)	X/R
Three Phase	11,855	14.4	5,920	17.1
Line to Ground	11,983	16.4	6,004	18.3

D. A one line diagram shall be provided as part of the analysis and shall clearly identify individual equipment buses, bus numbers used in the analysis, cable information (length, quantity per phase, size and type), overcurrent device information (manufacturer, type and size), transformers, motors, transfer switches, generators, etc.

E. The one line and analysis shall use a numbering scheme where each bus begins with a three digit number followed by a description (e.g., 102 MDPA or 103 ELEV DISC) and each connected circuit breaker or fuse shall have a corresponding designation (e.g., 102-1 MAIN CB, 102-2 ELEVATOR FDR or 103-1 ELEV DISC CB). An example one line will be provided by the university upon request.

3.3 FAULT-CURRENT STUDY

A. Calculate the maximum available short-circuit current in amperes rms symmetrical at circuit-breaker positions of the electrical power distribution system. The calculation shall be for a current immediately after initiation and for a three-phase bolted short circuit at each of the following:

1. Switchgear and switchboard bus
2. Medium-voltage switch and transformers
3. Distribution panelboards
4. Branch circuit panelboards
5. Variable Frequency Drives
6. Motor Control Centers
7. Company switches
8. Fused and non-fused disconnects
9. Low-voltage transformers
10. Individual circuit breakers
11. Automatic transfer switches
12. Generator
13. Combination starter/disconnects

B. Study electrical distribution system from normal and alternate emergency power sources throughout electrical distribution system for Project, using approved computer software program. Include studies of system-switching configurations and alternate operations that could result in maximum fault conditions.

C. Calculate momentary and interrupting duties on the basis of maximum available fault current.

D. Calculations to verify interrupting ratings of overcurrent protective devices shall comply with IEEE 241 and IEEE 242.

1. Transformers:

a. ANSI C57.12.10
b. ANSI C57.12.22
c. ANSI C57.12.40
d. IEEE C57.12.00
e. IEEE C57.96

2. Low-Voltage Circuit Breakers: IEEE 1015 and IEEE C37.20.1.
3. Low-Voltage Fuses: IEEE C37.46.
4. Circuit Breakers: IEEE c37.13.

E. Study Report: Show calculated X/R ratios and equipment interrupting rating (1/2-cycle) fault currents on electrical distribution system diagram.

F. Equipment Evaluation Report:

1. For 600-V overcurrent protective devices, ensure that interrupting ratings are equal to or higher than calculated 1/2-cycle symmetrical fault current.

2. For devices and equipment rated for asymmetrical fault current, apply multiplication factors listed in the standards to 1/2-cycle symmetrical fault current.
3. Verify adequacy of phase conductors at maximum three-phase bolted fault currents; verify adequacy of equipment grounding conductors and grounding electrode conductors at maximum ground-fault currents. Ensure that short-circuit withstand ratings are equal to or higher than calculated 1/2-cycle symmetrical fault current.

G. A table shall be included which lists the calculated short-circuit currents (rms symmetrical three phase), equipment short-circuit interrupting or withstand current ratings, and notes regarding the adequacy or inadequacy of the equipment at each bus.

H. Any inadequacies shall be called to the attention of the engineer of record and recommendations made for improvements as soon as they are identified.

3.4 COORDINATION STUDY

A. Perform coordination study using approved computer software program. Prepare a written report using results of fault-current study. Comply with IEEE 399.

1. Calculate the maximum and minimum 1/2-cycle short-circuit currents.
2. Calculate the maximum and minimum interrupting duty (5 cycles to 2 seconds) short-circuit currents.
3. Calculate the maximum and minimum ground-fault currents.

B. Comply with IEEE 242 recommendations for fault currents and time intervals.

C. Transformer Primary Overcurrent Protective Devices:

1. Device shall not operate in response to the following:

a. Inrush current when first energized.
b. Self-cooled, full-load current or forced-air-cooled, full-load current, whichever is specified for that transformer.
c. Permissible transformer overloads according to IEEE C57.96 if required by unusual loading or emergency conditions.

2. Device settings shall protect transformers according to IEEE C57.12.00, for fault currents.

D. Motors served by voltages more than 600 V shall be protected according to IEEE 620.

E. Conductor Protection: Protect cables against damage from fault currents according to ICEA P-32-382, ICEA P-45-482, and conductor melting curves in IEEE 242. Demonstrate that equipment withstands the maximum short-circuit current for a time equivalent to the tripping time of the primary relay protection or total clearing time of the fuse. To determine temperatures that damage insulation, use curves from cable manufacturers or from listed standards indicating conductor size and short-circuit current.

F. Coordination-Study Report: Prepare a written report indicating the following results of coordination study:

1. Tabular Format of Settings Selected for Overcurrent Protective Devices:

a. Device tag.
b. Relay-current transformer ratios; and tap, time-dial, and instantaneous-pickup values.
c. Circuit-breaker sensor rating; and long-time, short-time, and instantaneous settings.
d. Fuse-current rating and type.
e. Ground-fault relay-pickup and time-delay settings.

2. Coordination Curves: Prepared to determine settings of overcurrent protective devices to achieve selective coordination. Graphically illustrate that adequate time separation exists

between devices installed in series, including power utility company's upstream devices. Prepare separate sets of curves for the switching schemes and for emergency periods where the power source is local generation. Show the following information:

a. Device tag.
b. Voltage and current ratio for curves.
c. Three-phase and single-phase damage points for each transformer.
d. No damage, melting, and clearing curves for fuses.
e. Cable damage curves.
f. Transformer inrush points.
g. Maximum fault-current cutoff point.

G. Completed data sheets for setting of overcurrent protective devices.

H. A table shall be included which lists the recommended settings of each circuit breaker and relay.

I. A sufficient number of log-log plots shall be provided to indicate the degree of system protection and coordination by displaying the time-current characteristics of series connected overcurrent devices and other pertinent system parameters.

J. Deficiencies in protection and/or coordination shall be called to the attention of the engineer of record and recommendations made for improvements as soon as they are identified.

K. The electrical engineer that performed the study shall be responsible to set the circuit breakers according to the analysis once the report has been approved by the engineer of record.

3.5 ARC FLASH HAZARD ANALYSIS

A. The arc flash hazard analysis shall be performed according to the IEEE 1584 equations that are presented in NFPA70E-2004, Annex D.

B. The analysis shall consider multiple possible utility scenarios as well as multiple system configurations where appropriate such as normal and emergency transfer switch positions and different main-tie-main configurations.

C. The flash protection boundary and the incident energy shall be calculated at all significant locations in the electrical distribution system. This includes all switchboards, switchgear, motor-control centers, panelboards, busway and splitters.

D. Safe working distances shall be based upon the calculated arc flash boundary considering an incident energy of 1.2 cal/cm^2.

E. When appropriate, the short circuit calculations and the clearing times of the phase overcurrent devices will be retrieved from the short-circuit and coordination study model. Ground overcurrent relays should not taken into consideration when determining the clearing time when performing incident energy calculations.

F. The short-circuit calculations and the corresponding incident energy calculations for multiple system scenarios must be compared and the greatest incident energy must be uniquely reported for each equipment locations. Calculations must be performed to represent the maximum and minimum contributions of fault current magnitude for all normal and emergency operating conditions. The minimum calculation will assume that the utility contribution is at a minimum and will assume a minimum motor contribution (all motors off). Conversely, the maximum calculation will assume a maximum contribution from the utility and will assume the maximum amount of motors to be operating. Calculations shall take into consideration the parallel operation of synchronous generators with the electric utility, where applicable.

G. The incident energy calculations must consider the accumulation of energy over time when performing arc flash calculations on buses with multiple sources. Iterative calculations must take into account the changing current contributions, as the sources are interrupted or decremented with time. Fault contribution from motors and generators should be decremented as follows:

1. Fault contribution from induction motors should not be considered beyond 3-5 cycles.
2. Fault contribution from synchronous motors and generators should be decayed to match the actual decrement of each as closely as possible (e.g. contributions from permanent magnet generators will typically decay from 10 per unit to 3 per unit after 10 cycles).

H. For each equipment location with a separately enclosed main device (where there is adequate separation between the line side terminals of the main protective device and the work location), calculations for incident energy and flash protection boundary shall include both the line and load side of the main breaker.

I. When performing incident energy calculations on the line side of a main breaker (as required per above), the line side and load side contributions must be included in the fault calculation.

J. Mis-coordination should be checked amongst all devices within the branch containing the immediate protective device upstream of the calculation location and the calculation should utilize the fastest device to compute the incident energy for the corresponding location.

K. Arc Flash calculations shall be based on actual overcurrent protective device clearing time. Maximum clearing time will be capped at 2 seconds based on IEEE 1584-2002 section B.1.2. Where it is not physically possible to move outside of the flash protection boundary in less than 2 seconds during an arc flash event, a maximum clearing time based on the specific location shall be utilized.

L. Incident energy and flash protection boundary calculations

1. Arcing fault magnitude
2. Protective device clearing time
3. Duration of arc
4. Arc flash boundary
5. Working distance
6. Incident energy
7. Hazard Risk Category
8. Recommendation for arc flash energy reduction

M. The Arc Flash Hazard Analysis shall include recommendations for reducing Arc Flash Incident Energy (AFIE) levels and enhancing worker safety.

N. Results of the Arc Flash Hazard Analysis shall be submitted in tabular form and shall include the following information for each bus location: bus name, protective device name, bus voltage, bolted fault, arcing fault, trip/delay time, equipment type, working distance, arc flash boundary, incident energy and protective clothing category.

3.6 ARC FLASH WARNING LABELS

A. Arc flash labels shall be furnished and installed by the contractor of the Arc Flash Hazard Analysis.

B. The labels shall be 4 inches high by 6 inches wide and printed on a Brady THTEL-25-483-1-WA label type or similar. The arc flash label shall be formatted similarly to the examples shown below (Figure 1) and include the wording indicated in the table (Table 1) for each PPE category.

C. After labels will be based on recommended overcurrent device settings and will be provided after the results of the analysis have been presented to the owner and after any system changes, upgrades or modifications have been incorporated in the system.

D. The label shall include the following information, at a minimum:

1. Arc Flash Incident Energy
2. Location designation
3. Nominal voltage
4. Arc Flash protection boundary
5. Hazard risk category
6. Incident energy

7. Working distance
8. PPE category
9. PPE clothing description
10. PPE equipment description
11. Voltage
12. Glove class
13. Shock protection boundaries according to NFPA 70E
14. Analysis date
15. Building number
16. Equipment name and the upstream tripping device.
17. Engineering report number, revision number and issue date.

3.7 Labels shall be machine printed, with no field markings.

3.8 Arc flash labels shall be provided in the following manner and all labels shall be based on recommended overcurrent device settings. Provide one arc flash label for all electrical equipment including:

A. For each 480 and applicable 208 volt panelboard, one arc flash label shall be provided.

B. For each 480 and applicable 208 volt distribution panelboard, one arc flash label shall be provided.

C. For each motor control center, one arc flash label shall be provided.

D. For each low-voltage switchboard, one arc flash label shall be provided.

E. For each switchgear, one flash label shall be provided.

F. For medium voltage switches and transformers, one arc flash label shall be provided.

G. For each fused or non-fused disconnect switch, one arc flash label shall be provided.

H. For each generator and automatic transfer switches, one arc flash label shall be provided.

I. For each variable frequency drives, one arc flash label shall be provided.

J. For each combination starter/disconnects, one arc flash label shall be provided.

K. For each fused or non-fused disconnect switch and individual circuit breakers, one arc flash label shall be provided.

L. For each low-voltage transformer, one arc flash label shall be provided.

M. For each company switch, one arc flash label shall be provided.

Figure 1. Example arc flash labels.

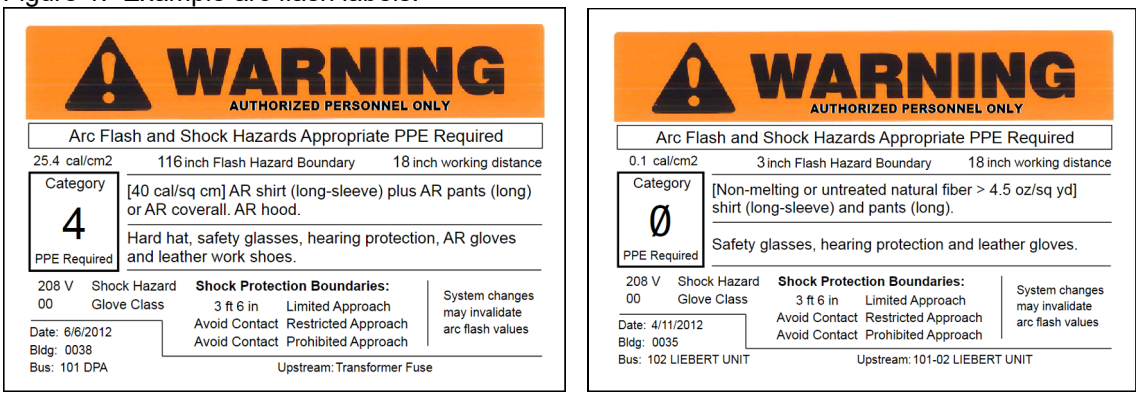

Table 1. Wording for the PPE related arc flash label fields.

Incident Energy (calories/cm^2)	PPE Category	PPE clothing	PPE equipment
0 - 1.2	0	[Non-melting or untreated natural fiber > 4.5 oz/sq yd] shirt (long-sleeve) and pants (long).	Safety glasses, hearing protection and leather gloves.
greater than 1.2 - 4	1	[4 cal/sq cm] AR shirt (long-sleeve) plus AR pants (long) or AR coverall. AR faceshield.	Hard hat, safety glasses, hearing protection, leather gloves and leather work shoes.
greater than 4 - 8	2	[8 cal/sq cm] AR shirt (long-sleeve) plus AR pants (long) or AR coverall. AR balaclava and AR face shield or AR hood.	Hard hat, safety glasses, hearing protection, leather gloves and leather work shoes.
greater than 8 - 25	3	[20 cal/sq cm] AR shirt (long-sleeve) plus AR pants (long) or AR coverall. AR hood.	Hard hat, safety glasses, hearing protection, AR gloves and leather work shoes.
greater than 25 - 40	4	[40 cal/sq cm] AR shirt (long-sleeve) plus AR pants (long) or AR coverall. AR hood.	Hard hat, safety glasses, hearing protection, AR gloves and leather work shoes.
greater than 40	X	Arc Flash Energy Exceeds the Rating of Category 4 PPE	Do not work on energized equipment

END OF SECTION 26 0573

SECTION 26 2416 - PANELBOARDS

PART 1 - GENERAL

1.1 RELATED DOCUMENTS

A. Drawings and general provisions of the Contract, including General, Special and Supplementary Conditions and Division 01 Specification Sections, apply to this Section.

B. All materials and installation shall comply with University construction standards. These standards are available at: http://www.uky.edu/EVPFA/Facilities/CPMD/standards/div00/div00.htm. Special attention shall be given to Divisions 02, 26 and 27. In the event of a conflict between these standards and the Contract Documents the most stringent requirement shall be met.

C. The Contractor is directed to examine each and every section of these specifications, all drawings relating to the Contract Documents, any and all Addenda, etc., for work described elsewhere that may relate to the provision of the work described herein. Materials and performance requirements are specified elsewhere herein that relate to these systems.

D. Each Electrical Contractor's attention is directed to Section 260501 - General Provisions, Electrical, and all other Contract Documents as they apply to his work.

1.2 SUMMARY

A. Section Includes:

1. Distribution panelboards.
2. Lighting and appliance branch-circuit panelboards.

1.3 DESCRIPTION OF WORK

A. All panelboards shall be of the circuit breaker type, and shall be of one manufacturer.

B. Branch panelboards shall be as indicated on the drawings and as specified herein. The lighting panelboards shall be of the dead-front, quick-make, quick-break, bolt-on circuit breaker type, with trip indicating and trip free handles. All circuits shall be clearly and properly numbered and shall be provided with thermal magnetic protection.

C. The panelboards shall be enclosed in code gauge, galvanized steel cabinets with smooth finished hinged doors without visible external fasteners and heavy chrome locks. Provide baked-on grey enamel finish, in accord with ANSI 61. Panels shall be constructed in accord with Federal Specification W-P-115B Type 1 Class 1, UL67, UL50, NEMA P31, and NFPA 70. Locks shall all be keyed alike.

D. Each door shall have a directory card inside, covered with a plastic shield, filled in typewritten with circuit numbers and description indicated. Room numbers shall be coordinated with final room numbers as selected by Owner -- not numbers on Contract Documents.

E. Panelboard trim for surface or flush panels shall be double-hinged type, to allow exposure of dead-front breaker portion behind locked door, with screw-fastened gutter trim that is hinged to allow full access to wiring gutters.

F. Special Note: The room numbers used to fill out the panel directories shall match the actual final name and numbering scheme selected by the Owner. They shall not be filled out per the construction drawing numbering scheme, unless the Contractor is directed to do so by the Architect or Engineer.

G. Branch panelboards shall be surface or flush mounted as indicated on the Contract Drawings. Flush panels trims shall be tight to wall and interior barriers, with no gaps allowing access to live parts. Oversize trims will not be acceptable.

H. Note: Where mounted in groups, align top of trim or tub for all panels in an area. Exact mounting height of topline shall be as directed by the Engineer.

I. All main bus and connections thereto in panelboards shall be copper. All bus bars shall extend full length of panelboards.

J. All panelboards shall have full size un-insulated copper ground busses and insulated full neutral busses.

K. All panelboards shall be provided with an SPD per Specification 264313, Surge Protection for Low-Voltage Electrical Power Circuits.

1.4 DEFINITIONS

A. SVR: Suppressed voltage rating.

B. GFCI: Ground-fault circuit interrupter

1.5 ACTION SUBMITTALS

A. Product Data: For each type of panelboard, switching and overcurrent protective device, surge suppression device, accessory, and component indicated. Include dimensions and manufacturers' technical data on features, performance, electrical characteristics, ratings, and finishes.

B. Shop Drawings: For each panelboard and related equipment.

1. Include dimensioned plans, elevations, sections, and details. Show tabulations of installed devices, equipment features, and ratings.
2. Detail enclosure types and details for types other than NEMA 250, Type 1.
3. Detail bus configuration, current, and voltage ratings.
4. Short-circuit current rating of panelboards and overcurrent protective devices.
5. Include evidence of NRTL listing for series rating of installed devices.
6. Detail features, characteristics, ratings, and factory settings of individual overcurrent protective devices and auxiliary components.
7. Include wiring diagrams for power, signal, and control wiring.
8. Include time-current coordination curves for each type and rating of overcurrent protective device included in panelboards. Submit on translucent log-log graft paper; include selectable ranges for each type of overcurrent protective device.

1.6 INFORMATIONAL SUBMITTALS

A. Panelboard Schedules: For installation in panelboards. Submit final version after load balancing.

1.7 CLOSEOUT SUBMITTALS

A. Operation and Maintenance Data: For panelboards and components to include in emergency, operation, and maintenance manuals. In addition to items specified in Section 017823 "Operation and Maintenance Data," include the following:

1. Routine maintenance requirements for panelboards and all installed components.
2. Manufacturer's written instructions for testing and adjusting overcurrent protective devices.
3. Time-current curves, including selectable ranges for each type of overcurrent protective device that allows adjustments.

1.8 MAINTENANCE MATERIAL SUBMITTALS

A. Furnish extra materials that match products installed and that are packaged with protective covering for storage and identified with labels describing contents.

1. Keys: Two spares for each type of panelboard cabinet lock.

1.9 QUALITY ASSURANCE

A. Testing Agency Qualifications: Member company of NETA or an NRTL.

1. Testing Agency's Field Supervisor: Currently certified by NETA to supervise on-site testing.

B. Source Limitations: Obtain panelboards, overcurrent protective devices, components, and accessories from single source from single manufacturer.

C. Product Selection for Restricted Space: Drawings indicate space available for panelboards including clearances between panelboards and adjacent surfaces and other items. Furnish and install equipment to comply with NEC clearances.

D. Electrical Components, Devices, and Accessories: Listed and labeled as defined in NFPA 70, by a qualified testing agency, and marked for intended location and application.

E. Comply with NEMA PB 1.

F. Comply with NFPA 70.

1.10 DELIVERY, STORAGE, AND HANDLING

A. Handle and prepare panelboards for installation according to NECA 407 and NEMA PB 1.

1.11 PROJECT CONDITIONS

A. Environmental Limitations: Do not deliver or install panelboards until spaces are enclosed and weathertight, wet work in spaces is complete and dry, work above panelboards is complete, and temporary HVAC system is operating and maintaining ambient temperature and humidity conditions at occupancy levels during the remainder of the construction period.

B. Interruption of Existing Electric Service: Do not interrupt electric service to facilities occupied by Owner or others unless permitted under the following conditions and then only after arranging to provide temporary electric service according to requirements indicated:

1. Notify Construction Manager no fewer than 14 days in advance of proposed interruption of electric service.
2. Do not proceed with interruption of electric service without Construction Manager's written permission.
3. Comply with NFPA 70E.

1.12 COORDINATION

A. Coordinate layout and installation of panelboards and components with other construction that penetrates walls or is supported by them, including electrical and other types of equipment, raceways, piping, encumbrances to workspace clearance requirements, and adjacent surfaces. Maintain required workspace clearances and required clearances for equipment access doors and panels.

B. Coordinate sizes and locations of concrete bases with actual equipment provided. Cast anchor-bolt inserts into bases. Concrete, reinforcement, and formwork requirements are specified with concrete.

1.13 WARRANTY

A. The equipment items shall be supported by service organizations which are reasonably convenient (less than 100 miles from project site) to the equipment installation in order to render satisfactory service to the equipment on a regular and emergency basis during the warranty period of the contract.

B. All panelboards, finishes, and all of its component parts, and controls shall have an unconditional one (1) year warranty. Warranty shall include finishes and all components to be free from defects in materials and workmanship for a period of one (1) year from date of Owner’s acceptance. Replacement of panelboards, faulty materials and the cost of labor to make the replacement shall be the responsibility of the Contractor.

C. The Warranty specified in this Article shall not deprive the Owner of other rights the Owner may have under provisions of the Contract Documents and shall be in addition to, and run concurrently with other warranties made by the Contractor under requirements of the Contract Documents.

D. Special Warranty: Manufacturer's standard form in which manufacturer agrees to repair or replace surge suppression devices that fail in materials or workmanship within specified warranty period.

1. Warranty Period: Five years from date of Substantial Completion.

1.14 SYSTEM COMMISSIONING

A. Section 019113 requires the engagement of a Commissioning Authority to document the completion of the Mechanical, Fire Protection, Plumbing, Electrical, Electronic Safety and Security, and associated Control Systems for the project. Section 019113 defines the roles and responsibilities of each member of the commissioning team.

B. Comply with the requirements of Section 019113 for the commissioning of the various building systems.

PART 2 - PRODUCTS

2.1 GENERAL REQUIREMENTS FOR PANELBOARDS

A. All panelboards shall be of the circuit breaker type, and shall be of one manufacturer.

B. Enclosures: Flush- and surface-mounted cabinets. Box width shall not exceed 20" wide. Rated for environmental conditions at installed location.

1. Indoor Dry and Clean Locations: NEMA 250, Type 1.
2. Kitchen and Catering Areas: NEMA 250, Type 4X, Stainless Steel.

C. Type 1 Boxes

1. Boxes shall be hot zinc dipped galvanized steel constructed in accordance with UL 50 requirements. Unpainted galvannealed steel is not acceptable.
2. Boxes shall have removable end walls. End walls shall not be provided with concentric knockouts. Boxes shall have welded interior mounting studs. Interior mounting brackets are not required.
3. Front: Secured to box with concealed trim clamps. For surface-mounted fronts, match box dimensions; for flush-mounted fronts, overlap box.
4. Hinged Front Cover: Entire front trim hinged to box and with standard door within hinged trim cover.
5. Gutter Extension and Barrier: Same gage and finish as panelboard enclosure; integral with enclosure body. Arrange to isolate individual panel sections.
6. Finishes: Panels, Back Boxes and Trim: Galvanized Steel, factory finished immediately after cleaning and pretreating with manufacturer's standard two-coat, baked-on finish consisting of prime coat and thermosetting topcoat.
7. Directory Card: Inside panelboard door, mounted in metal frame with transparent protective cover.
8. All lock assemblies shall be keyed alike.

D. Incoming Mains Location: Top and bottom to match feeder conduit entry. Feeders routed through the side gutters to reach the top or bottom main breakers from the opposite end of the panel are not acceptable.

E. Phase, Neutral, and Ground Busses:

1. Material: Fully plated, hard-drawn copper, 98 percent conductivity.
2. Equipment Ground Bus: Extend full length of panelboard and adequate for feeder and branch-circuit equipment grounding conductors; bonded to box.

3. Isolated Ground Bus: Adequate for branch-circuit isolated ground conductors; insulated from box. Provide where show on drawings.
4. Extra-Capacity Neutral Bus: Neutral bus rated 200 percent of phase bus and UL listed as suitable for nonlinear loads. Provide when supplied by K rated transformers.
5. Split Bus: Vertical buses divided into individual vertical sections.

F. Conductor Connectors: Suitable for use with conductor material and sizes.

1. Main and Neutral Lugs: Mechanical type.
2. Ground Lugs and Bus-Configured Terminators: Mechanical type.
3. Feed-Through Lugs: Mechanical type, suitable for use with conductor material. Locate at opposite end of bus from incoming lugs or main device.
4. Subfeed (Double) Lugs: Mechanical type suitable for use with conductor material. Locate at same end of bus as incoming lugs or main device.
5. Extra-Capacity Neutral Lugs: Rated 200 percent of phase lugs mounted on extra-capacity neutral bus.

G. Future Devices: Mounting brackets, bus connections, filler plates, and necessary appurtenances required for future installation of devices.

H. Panelboard Short-Circuit Current Rating: Fully rated to interrupt symmetrical short-circuit current available at terminals.

2.2 DISTRIBUTION PANELBOARDS

A. Manufacturers: Subject to compliance with requirements, provide products by one of the following:

1. Square D; a brand of Schneider Electric.
2. Eaton Electrical Inc.; Cutler-Hammer Business Unit.
3. General Electric Company; GE Consumer & Industrial - Electrical Distribution.

B. Panelboards: NEMA PB 1, power and feeder distribution type.

C. Doors: Secured with vault-type latch with tumbler lock; keyed alike. For doors more than 36 inches (914 mm) high, provide two latches, keyed alike.

D. Branch Overcurrent Protective Devices for Circuit-Breaker Frame Sizes 125 A and Smaller: Bolt-on circuit breakers.

E. Branch Overcurrent Protective Devices for Circuit-Breaker Frame Sizes Larger Than 125 A: Bolt-on circuit breakers; plug-in circuit breakers where individual positive-locking device requires mechanical release for removal.

2.3 LIGHTING AND APPLIANCE BRANCH-CIRCUIT PANELBOARDS

A. Manufacturers: Subject to compliance with requirements, provide products by one of the following:

1. Square D; a brand of Schneider Electric.
2. Eaton Electrical Inc.; Cutler-Hammer Business Unit.
3. General Electric Company; GE Consumer & Industrial - Electrical Distribution.

B. Panelboards: NEMA PB 1, lighting and appliance branch-circuit type.

C. Branch Overcurrent Protective Devices: Bolt-on circuit breakers, replaceable without disturbing adjacent units.

D. Doors: Concealed hinges; secured with flush latch with tumbler lock; keyed alike.

E. Interior:

1. Continuous main current ratings, as indicated on associated drawings.
2. Short circuit rating as shown on the schedules.

3. Provide one (1) continuous bus bar per phase. Each bus bar shall have sequentially phased branch circuit connectors limited to bolt-on branch circuit breakers. The bussing shall be fully rated. Panelboard bus current ratings shall be determined by heat-rise tests conducted in accordance with UL 67. Bussing shall be plated copper. Bus bar plating shall run the entire length of the bus bar. Panelboards shall be suitable for use as Service Equipment when application requirements comply with UL 67 and NEC Articles 230-F and -G.
4. All current-carrying parts shall be insulated from ground and phase-to-phase by high dielectric strength thermoplastic.
5. A solidly bonded copper equipment ground bar shall be provided.
6. Split solid neutral shall be plated and located in the mains compartment up to 250 amperes so all incoming neutral cable may be of the same length.
7. Interior trim shall be of dead-front construction to shield user from energized parts. Dead-front trim shall have filler plates covering unused mounting space.
8. Nameplates shall contain system information and catalog number or factory order number. Interior wiring diagram, neutral wiring diagram, CSA/UL Listed label and short circuit current rating shall be displayed on the interior or in a booklet format.

2.4 DISCONNECTING AND OVERCURRENT PROTECTIVE DEVICES

A. Manufacturers: Subject to compliance with requirements, provide products by one of the following:

1. Square D; a brand of Schneider Electric.
2. Eaton Electrical Inc.; Cutler-Hammer Business Unit.
3. General Electric Company; GE Consumer & Industrial - Electrical Distribution.

B. Molded-Case Circuit Breaker (MCCB): Comply with UL 489, with interrupting capacity to meet available fault currents.

1. Circuit breakers shall be CSA and UL Listed with amperage ratings, interrupting ratings, and number of poles as indicated on the panelboard schedules.
2. Molded case branch circuit breakers shall have bolt-on type bus connectors.
3. Circuit breakers shall have an overcenter toggle mechanism which will provide quick-make, quick-break contact action. Circuit breakers shall have thermal and magnetic trip elements in each pole. Two- and three-pole circuit breakers shall have common tripping of all poles.
4. There shall be two forms of visible trip indication. The circuit breaker handle shall reside in a position between ON and OFF. In addition, there shall be a red indicator appearing in the clear window of the circuit breaker housing.
5. The exposed faceplates of all branch circuit breakers shall be flush with one another.
6. Lugs shall be UL Listed to accept solid or stranded copper and aluminum conductors.
7. Thermal-Magnetic Circuit Breakers: Inverse time-current element for low-level overloads, and instantaneous magnetic trip element for short circuits. Adjustable magnetic trip setting for circuit-breaker frame sizes 250 A and larger.
8. Adjustable Instantaneous-Trip Circuit Breakers: Magnetic trip element with front-mounted, field-adjustable trip setting.
9. Electronic trip circuit breakers with rms sensing; field-replaceable rating plug or field-replicable electronic trip; and the following field-adjustable settings:
10. Instantaneous trip.
11. Long- and short-time pickup levels.
12. Long- and short-time time adjustments.
13. Current-Limiting Circuit Breakers: Frame sizes 400 A and smaller; let-through ratings less than NEMA FU 1, RK-5.
14. GFCI Circuit Breakers: Single- and two-pole configurations with Class A ground-fault protection (6-mA trip).
15. Ground-Fault Equipment Protection (GFEP) Circuit Breakers: Class B ground-fault protection (30-mA trip).

16. Arc-Fault Circuit Interrupter (AFCI) Circuit Breakers: Comply with UL 1699; 120/240-V, single-pole configuration.
17. Molded-Case Circuit-Breaker (MCCB) Features and Accessories:
    a. Standard frame sizes, trip ratings, and number of poles.
    b. Lugs: Mechanical style, suitable for number, size, trip ratings, and conductor materials.
    c. Application Listing: Appropriate for application; Type SWD for switching fluorescent lighting loads; Type HID for feeding fluorescent and high-intensity discharge (HID) lighting circuits.
    d. Ground-Fault Protection: Integrally mounted relay and trip unit with adjustable pickup and time-delay settings, push-to-test feature, and ground-fault indicator.
    e. Shunt Trip: 120 V trip coil energized from separate circuit, set to trip at 75 percent of rated voltage.
    f. Multipole units enclosed in a single housing or factory assembled to operate as a single unit.

2.5 ACCESSORY COMPONENTS AND FEATURES

A. Accessory Set: Include tools and miscellaneous items required for overcurrent protective device test, inspection, maintenance, and operation.

B. Portable Test Set: For testing functions of solid-state trip devices without removing from panelboard. Include relay and meter test plugs suitable for testing panelboard meters and switchboard class relays.

PART 3 - EXECUTION

3.1 EXAMINATION

A. Receive, inspect, handle, and store panelboards according to NECA 407.

B. Examine panelboards before installation. Reject panelboards that are damaged or rusted or have been subjected to water saturation.

C. Examine elements and surfaces to receive panelboards for compliance with installation tolerances and other conditions affecting performance of the Work.

D. Proceed with installation only after unsatisfactory conditions have been corrected.

3.2 INSTALLATION

A. Install panelboards and accessories according to NECA 407 and NEMA PB 1.1.

B. Equipment Mounting: Install floor-mounted panels on concrete bases, 4-inch nominal thickness. Comply with requirements for concrete base specified in Section 033000 "Cast-in-Place Concrete."
    1. Install dowel rods to connect concrete base to concrete floor. Unless otherwise indicated, install dowel rods on 18-inch (450-mm) centers around full perimeter of base.
    2. For panelboards, install epoxy-coated anchor bolts that extend through concrete base and anchor into structural concrete floor.
    3. Place and secure anchorage devices. Use setting drawings, templates, diagrams, instructions, and directions furnished with items to be embedded.
    4. Install anchor bolts to elevations required for proper attachment to panelboards.
    5. Attach panelboard to the vertical finished or structural surface behind the panelboard.

C. Temporary Lifting Provisions: Remove temporary lifting eyes, channels, and brackets and temporary blocking of moving parts from panelboards.

D. Comply with mounting and anchoring requirements specified in Section 260548 "Vibration and Seismic Controls for Electrical Systems."

E. Mount top of trim 90 inches above finished floor unless otherwise indicated.

F. Mount panelboard cabinet plumb and rigid without distortion of box. Mount recessed panelboards with fronts uniformly flush with wall finish and mating with back box.

G. Install overcurrent protective devices and controllers not already factory installed. Set field-adjustable, circuit-breaker trip ranges.

H. Install filler plates in unused spaces.

I. Stub four (4) 1-inch and two (2) 1-1/4”-inch empty conduits from recessed panelboard into accessible ceiling space or space designated to be ceiling space in the future.

J. Arrange conductors in gutters into groups and bundle and wrap with wire ties after completing load balancing.

K. Comply with NECA 1.

3.3 IDENTIFICATION

A. Each door shall have a directory card inside, covered with a plastic non-yellowing shield. Directory Card to indicate installed circuit loads after balancing panelboard loads; incorporate Owner's final room designations. Obtain approval before installing. Use a computer to create directory in Microsoft Excel; handwritten directories are not acceptable. Digital versions to be provided to Owner.

B. Panelboard Nameplates: Label each panelboard with a nameplate complying with requirements for identification specified in Section 260553.

C. Device Nameplates: Label each branch circuit device in distribution panelboards with a nameplate complying with requirements for identification specified in Section 260553.

3.4 QUALITY CONTROL/STARTUP: Major equipment and system startup and operational tests shall be scheduled and documented in accordance with Section 019113 Commissioning.

A. Functional Performance Tests: System functional performance testing is part of the Commissioning Process as specified in Section 019113. Functional performance testing shall be performed by the contractor and witnessed and documented by the Commissioning Authority.

B. Demonstration and Training: Training of the owner’s operation and maintenance personnel is required in cooperation with the Commissioning Authority. The instruction shall be scheduled in coordination with the Commissioning Authority after submission and approval of formal training plans.

3.5 FIELD QUALITY CONTROL

A. Manufacturer's Field Service: Engage a factory-authorized service representative to inspect, test, and adjust components, assemblies, and equipment installations, including connections.

B. Acceptance Testing Preparation:

1. Test insulation resistance for each panelboard bus, component, connecting supply, feeder, and control circuit.
2. Test continuity of each circuit.

C. Tests and Inspections:

1. Perform each visual and mechanical inspection and electrical test stated in NETA Acceptance Testing Specification. Certify compliance with test parameters.
2. Correct malfunctioning units on-site, where possible, and retest to demonstrate compliance; otherwise, replace with new units and retest.

D. Panelboards will be considered defective if they do not pass tests and inspections.

E. Prepare test and inspection reports, including a certified report that identifies panelboards included and that describes scanning results. Include notation of deficiencies detected, remedial action taken, and observations after remedial action.

3.6 CLEANING

A. On completion of installation, inspect interior and exterior of panelboards. Remove paint splatters and other spots. Vacuum dirt and debris; do not use compressed air to assist in cleaning. Repair exposed surfaces to match original finish.

3.7 ADJUSTING

A. Adjust moving parts and operable component to function smoothly, and lubricate as recommended by manufacturer.

B. Set field-adjustable circuit-breaker trip ranges as specified in Section 260573.

C. Load Balancing: After Substantial Completion, but not more than 60 days after Final Acceptance, measure load balancing and make circuit changes.

1. Measure as directed during period of normal system loading.
2. Perform load-balancing circuit changes outside normal occupancy/working schedule of the facility and at time directed. Avoid disrupting critical 24-hour services such as fax machines and on-line data processing, computing, transmitting, and receiving equipment.
3. After circuit changes, recheck loads during normal load period. Record all load readings before and after changes and submit test records.
4. Tolerance: Difference exceeding 20 percent between phase loads, within a panelboard, is not acceptable. Rebalance and recheck as necessary to meet this minimum requirement.

END OF SECTION 26 2416

SECTION 26 2726 - WIRING DEVICES AND PLATES

Part 1 - GENERAL

1.1 This section of the specifications covers all wiring devices and cover plates, standard, weatherproof and dust-tight.

1.2 Wiring devices, listed by manufacturer and catalogue numbers are to establish the quality and type required. Equivalent devices of other manufacturers will be acceptable with prior approval of the Engineer. Submit cutsheets and/or samples of each type ten days prior to bid date for review and written approval to bid. Insofar as possible, standard application or special application devices shall be by one manufacturer.

Part 2 - MATERIALS

TYPE	RATING	CONFIGURATION	COLOR	VENDOR - CAT. #
RECEPTACLE - DUPLEX **PREMIUM GRADE**	125V, 20A	NEMA 5-20R	!	HUBBELL 5352 LEVITON or P & S equal
	* USE WHERE ON DEDICATED 20A CKT., OR CALLED OUT ** USE WHERE ON DEDICATED 15A CKT., OR WHERE MORE THAN ONE RECEPTACLE ON A CIRCUIT			
RECEPTACLE - DUPLEX G.F.I.	125V, 20A	NEMA 5-20R	!	P & S 2095 TRAN LEVITON or HUBBELL equal
RECEPTACLE - DUPLEX USB	125V, 20A	NEMA 5-20R	!	HUBBELL USB20AC LEVITON OR P & S Equal
RECEPTACLE - SIMPLEX	125V, 20A	NEMA 5-20R	!	HUBBELL 5361
RECEPTACLE, SINGLE	250V, 20A	NEMA 10-20R	BLACK	HUBBELL 6810 LEVITON or P & S Equal
RECEPTACLE, SINGLE	250V, 30A	NEMA 6-30R	BLACK	HUBBELL 9330 LEVITON or P & S Equal
RECEPTACLE, SINGLE	250V, 50A	NEMA 6-50R	BLACK	HUBBELL 9367 LEVITON or P & S Equal
SWITCH, SINGLE POLE	120/277V, 20A	SPST	!	HUBBELL HBL-1221 LEVITON or P & S Equal
SWITCH, THREE-WAY	120/277V,	3-WAY	!	HUBBELL HBL-1223

	20A			LEVITON or P & S Equal

NOTES:

1. PROVIDE MATCHING CAP (PLUG) FOR ALL RECEPTACLES 30 AMP RATED AND ABOVE AS REQUIRED FOR EQUIPMENT.

2. ALL RECEPTACLES SHALL BE BACK OR SIDE-WIRED, CLAMPING TYPE

3. RECEPTACLES SHALL BE TAMPER RESISTANT AND WEATHER RESISTANT AND MARKED ACCORDINGLY AS REQUIRED BY N.E.C.

! SEE ARTICLE 3, COLOR.

2.1 SMALL MOTOR CONTROL SWITCHES

2.1.1 For small line-to-neutral motor loads of 3/4 HP or less, single phase, rated at 120 or 277 volts, provide snap-type, H.P. rated motor starter switch with thermal overloads. Overload heaters sized to match the motor nameplate amperes and the ambient temperature shall be provided. Provide with NEMA 1, NEMA 3R or other enclosure suitable for the location and atmosphere. All manual starters in finished areas shall be in flush-mounted enclosures.

2.2 SWITCHBOX – MOUNTED STAND-ALONE DIMMERS

2.2.1 Wall Dimmer
2.2.2 Pushbutton Dimmer Control: Separate pushbutton for dimmer adjustment (in addition to ON/OFF).
2.2.3 3-Way Dimmers: Provides multi-location capability using standard 3-way and 4-way mechanical switches.
2.2.4 Compatible with Driver installed in controlled fixture
2.2.5 Compatible with all IEC 60929 annex E driver.
2.2.6 High and Low Adjustable Trim.
2.2.7 Where indicated on the Drawings, extend dimming control wiring to BAS controller for integration into the campus control system.
2.2.8 Provide power interfaces as indicated or as required to control the loads as indicated and for Class 2 installations.
2.2.9 Phase independent of control input.
2.2.10 Rated for use in air-handling spaces as defined in UL 2043.
2.2.11 Utilize air gap off to disconnect the load from line supply.
2.2.12 Diagnostics and Service: Replacing power interface does not require re-programming of system or processor.

2.3 CEILING-MOUNTED VACANCY SENSORS

2.3.1 Ceiling-mounted, solid-state indoor vacancy sensors.
2.3.2 Dual technology.
2.3.3 Separate power pack.
2.3.4 Hardwired connection to switch and BAS.
2.3.5 Listed and labeled as defined in NFPA 70, by a qualified testing agency, and marked for intended location and application.

2.3.6 Operation - Vacancy Sensor: Unless otherwise indicated, lights are manually turned on and sensor turns lights off when the room is unoccupied; with a time delay for turning lights off, adjustable over a minimum range of 1 to 15 minutes.
2.3.7 Sensor Output: Contacts rated to operate the connected relay, complying with UL 773A Sensor is powered from the power pack.
2.3.8 Power: Line voltage.
2.3.9 Power Pack: Dry contacts rated for 20-A LED load at 120- and 277-V ac, for 13-A tungsten at 120-V ac, and for 1 hp at 120-V ac. Sensor has 24-V dc, 150-mA, Class 2 power source, as defined by NFPA 70.
2.3.10 Mounting:
2.3.10.1 Sensor: Suitable for mounting in any position on a standard outlet box.
2.3.10.2 Relay: Externally mounted through a 1/2-inch (13-mm) knockout in a standard electrical enclosure.
2.3.11 Time-Delay and Sensitivity Adjustments: Recessed and concealed behind hinged door.
2.3.12 Indicator: Digital display, to show when motion is detected during testing and normal operation of sensor.
2.3.13 Bypass Switch: Override the "on" function in case of sensor failure.
2.3.14 Automatic Light-Level Sensor: Adjustable from 2 to 200 fc (21.5 to 2152 lux); turn lights off when selected lighting level is present.
2.3.15 Dual-Technology Type: Ceiling mounted; detect occupants in coverage area using PIR and ultrasonic detection methods. The particular technology or combination of technologies that control on-off functions is selectable in the field by operating controls on unit.
2.3.16 Sensitivity Adjustment: Separate for each sensing technology.
2.3.17 Detector Sensitivity: Detect occurrences of 6-inch- (150-mm-) minimum movement of any portion of a human body that presents a target of not less than 36 sq. in. (232 sq. cm), and detect a person of average size and weight moving not less than 12 inches (305 mm) in either a horizontal or a vertical manner at an approximate speed of 12 inches/s (305 mm/s).
2.3.18 Detection Coverage (Standard Room): Detect occupancy anywhere within a circular area of 2000 sq. ft. when mounted on a 9 foot high ceiling.
2.3.19 Provide with low voltage relay output for interface with building management system.

2.4 SWITCHBOX-MOUNTED VACANCY SENSORS

2.4.1 General Requirements for Sensors: Automatic-wall-switch occupancy sensor with manual on-off switch, suitable for mounting in a single gang switchbox, with provisions for connection to BAS using hardwired connection.
2.4.2 Listed and labeled as defined in NFPA 70, by a qualified testing agency, and marked for intended location and application.
2.4.3 Occupancy Sensor Operation: Unless otherwise indicated, turn lights on when coverage area is occupied, and turn lights off when unoccupied; with a time delay for turning lights off, adjustable over a minimum range of 1 to 15 minutes.
2.4.4 Operating Ambient Conditions: Dry interior conditions, 32 to 120 deg F (0 to 49 deg C).
2.4.5 Switch Rating: Not less than 800-VA LED load at 120 V.
2.4.6 Wall-Switch Sensor:
2.4.6.1 Standard Range: 180-degree field of view, field adjustable from 180 to 40 degrees; with a minimum coverage area of 900 sq. ft.
2.4.6.2 Sensing Technology: Dual technology - PIR and ultrasonic.
2.4.7 Switch Type: SP, field-selectable automatic "on," or manual "on," automatic "off."
2.4.8 Capable of controlling load in three-way application.
2.4.9 Voltage: 120 V.

2.4.10 Ambient-Light Override: Concealed, field-adjustable, light-level sensor from 10 to 150 fc (108 to 1600 lux). The switch prevents the lights from turning on when the light level is higher than the set point of the sensor.
2.4.11 Concealed, field-adjustable, "off" time-delay selector at up to 30 minutes.
2.4.12 Adaptive Technology: Self-adjusting circuitry detects and memorizes usage patterns of the space and helps eliminate false "off" switching.

2.5 EMERGENCY RELAY

2.5.1 Description: NC, electrically held relay, arranged for wiring in parallel with manual or automatic switching contacts; complying with UL 924.
2.5.2 Coil Rating: 120 V.
2.5.3 Energize lighting indicated on any loss of utility power.

2.6 COLOR

2.6.1 Color of devices shall be as selected by the architect. Samples (devices, plates or both) may be required to be submitted with other architectural color items by the Contractor. The Contractor shall coordinate any such submission required with other trades, the Prime Contractor or as needed.

2.6.2 Where devices are controlling or supplying emergency power from a standby source, the device color shall be red, as with switch toggles or receptacle fronts. Plate color shall match others on normal power in the building unless otherwise noted.

2.6.3 Where surface finishes next to the devices vary in color or shade throughout the project, the Contractor may be required to provide lighter or darker plates and devices to more closely match wall finishes. These variations are considered to be included in the original contract for construction.

2.3 PLATES AND COVERS

2.3.1 Unless otherwise specified or noted, all wiring device plates and covers shall be smooth thermoplastic, Hubbell "P" Series or equivalent G.E. or Leviton. Color shall match device unless otherwise indicated. Plates shall have circuit designation engraved in the face.

2.3.2 Plates for use on emergency outlets shall be engraved with the word “Emergency”. Plates for use on isolated ground outlets shall be engraved with the words “Isolated Ground”.

2.3.3 Cover plates shall be of one manufacturer insofar as possible.

2.3.4 Weatherproof plates for G.F.C.I. receptacles shall be cast aluminum, self-closing, gasketed, suitable for standard box mounting, U.L. listed for wet location use, cover closed. Vertical mounting - Hubbell WP26M, horizontal mounting - Hubbell WP26MH (die-cast zinc) or equivalent Leviton or P & S.

2.3.5 Weatherproof switch plates for toggle-handle switches shall be clear silicone rubber, for standard outlet boxes. Hubbell 1795 or equivalent P & S or Leviton.

2.3.6 Cover plates for computer, telephone or other system outlets shall be as color and finish to match receptacle plates in each space specified in other sections.

2.4 FLOOR BOXES

2.4.1 In general, floor boxes that are to contain multiple services such as power, data, voice, video, etc., shall be constructed of stamped steel and heavy thermoplastic with barriers or compartments to separate power from signal services per National Electrical Code.

2.4.2 Provide floor boxes with proper trim for carpet, wood, terrazo, tile or concrete floors, wiring slots, dust covers and proper device plates to hold outlets, jacks, etc. They shall be fully adjustable. Conduit rough-in shall be as required. All tops shall be capable of receiving an insert of the surrounding floor material.

2.4.3 Outlets for multi-service floor boxes shall be as specified elsewhere in these specifications.

2.4.4 Set boxes dead level with flooring and provide proper support by thickening concrete slab, welding angle iron across joists below or other approved means.

2.4.5 Multi-service floor boxes shall be capable of containing a minimum of two duplex receptacles and two 4-position single gang modular plates for voice, video or data jacks. Boxes shall be a maximum of 2-1/2” deep where installed in elevated slabs. Each box compartment shall have at least one ¾” and one 1” conduit entrance. Unless specified on drawings, boxes shall be Wiremold RFB4-SS series or equal by Hubble or FSR. Provide carpet or tile lid insert to match surrounding floor.

2.4.6 Audio/Video multi-service floor boxes shall be capable of containing a minimum of two duplex receptacles and six gangs of modular plates for audio, video or data jacks. Boxes shall be a maximum of 6” deep. Each box compartment shall have at least one 1 1/4” conduit entrance with ability to field punch up to 2” conduit connections. Unless specified on the drawings, boxes shall be FSR FL-500P-6 series or equal by Hubble or Wiremold. Provide carpet or tile lid insert to match surrounding floor.

2.4.7 Single-service floor boxes shall be capable of serving as a pass-through for Category 6a data cabling. Each box compartment shall have at least two 1” conduit entrances. Unless specified on the drawings, boxes shall be Wiremold 881 series or equal by Hubble or FSR. Provide flush brass trim with 1 1/4” flexible conduit connection.

Part 3 - INSTALLATION

All wiring devices in dusty areas, exposed to weather and moisture shall be installed in Type "FS" conduit fittings having mounting hubs, with appropriate cover plates.

3.1 Devices that have been installed before painting shall be masked. No plates or covers shall be installed until all finishing and cleaning has been completed.

3.2 Provide G.F.C.I. duplex feed-thru style receptacles where indicated or required by the National Electrical Code, whether specifically called out or not. When a G.F.C.I. receptacle is on a circuit with other non-G.F.C.I. receptacles, it shall always be placed at the homerun point of the circuit and shall be wired to ground-fault interrupt protect the downstream outlets on that circuit unless specifically indicated to the contrary. Provide a "G.F.C.I. protected" label on each downstream outlet. GFCI receptacles shall audibly alarm when tripped.

3.3 All receptacles shall be installed with ground prong at bottom position.

3.4 All device face plates shall be labeled with panel and circuit designation by means of machine printed adhesive tape. Select face plates shall be engraved. Refer to drawings.

3.5 All device boxes shall have circuit number identified within the box.

3.6 Coordination for all receptacles except NEMA 5 Configuration: Contractor shall confirm receptacle configuration of all special purpose receptacles prior to installation and provide devices to match equipment. Contractor shall replace any incompatible receptacle discovered during owner move-in.

END OF SECTION 26 2726

SECTION 26 4113 - LIGHTNING PROTECTION FOR STRUCTURES

PART 1 - GENERAL

1.1 RELATED DOCUMENTS

A. Drawings and general provisions of the Contract, including General, Special and Supplementary Conditions and Division 01 Specification Sections, apply to this Section.

B. All materials and installation shall comply with University construction standards. These standards are available at: http://www.uky.edu/EVPFA/Facilities/CPMD/standards/div00/div00.htm. Special attention shall be given to Divisions 02, 16 and 17. In the event of a conflict between these standards and the Contract Documents the most stringent requirement shall be met.

C. The Contractor is directed to examine each and every section of these specifications, all drawings relating to the Contract Documents, any and all Addenda, etc., for work described elsewhere that may relate to the provision of the work described herein. Materials and performance requirements are specified elsewhere herein that relate to these systems.

D. Each Electrical Contractor's attention is directed to Section 260501 - General Provisions, Electrical, and all other Contract Documents as they apply to his work.

1.2 SUMMARY

A. Section includes lightning protection for structures.

B. The Electrical Contractor shall provide the necessary labor, materials, services necessary to provide the complete lightning protection system as specified herein. This work shall include, but is not necessarily limited to Conductors, Air Terminals, Connectors, Splicers, Ground Rods, Rod Clamps, Ground Plates, Bonding Plates and Surge Arrestors.

C. This is a performance based specification. It is the Contractors' responsibility for a complete and functional system as described in the specification drawings.

1.3 ACTION SUBMITTALS

A. Product Data: For each type of product indicated.

B. Shop Drawings: For air terminals and mounting accessories.

1. Dimensional layout drawing of the lightning protection system, along with details of the components to be used in the installation.
2. Include indications for use of raceway, data on how concealment requirements will be met, and calculations required by NFPA 780 for bonding of grounded and isolated metal bodies.

1.4 INFORMATIONAL SUBMITTALS

A. Qualification Data: For qualified Installer and manufacturer. Include data on listing or certification by UL.

B. Certification, signed by Contractor, that roof adhesive is approved by manufacturer of roofing material.

C. Field quality-control reports.

D. Comply with recommendations in NFPA 780, Annex D, "Inspection and Maintenance of Lightning Protection Systems," for maintenance of the lightning protection system.

E. Other Informational Submittals: Plans showing dimensioned as-built locations of grounding features, including the following:

1. Ground rods.

2. Bond and interconnection locations.

1.5 QUALITY ASSURANCE

A. Installer Qualifications:

1. Certified by UL and LPI as a Master Installer/Designer, trained and approved for installation of units required for this Project.

B. System Certificate:

1. UL Master Label.

2. LPI System Certificate.

C. Electrical Components, Devices, and Accessories: Listed and labeled as defined in NFPA 780, "Definitions" Article.

D. Manufacturers: First regularly engaged in manufacturer of lightning protection equipment, of types, sizes and ratings required, whose products have been satisfactorily used in similar service for not less than 5 years. The firm shall be a member of and certified by the Lighting Protection Institute of America or listed member of Underwriters Laboratories.

1. A firm with at least 3 years of success installation experience on projects with lightning protection work similar to that required for project.

E. ANSI/NFPA Compliance: Comply with NEC and NFPA No. 780, "Lightning Protection Code", as applicable to materials and installation of lightning protection components and wiring.

F. ANSI Compliance: Comply with applicable portions of ANSI C2 and C62.2 pertaining to lightning (surge) arrestors.

G. UL Compliance: Comply with UL 96, "Lightning Protection Components" pertaining to design, materials and sizing of lightning protection components. Provide components, which are UL listed and labeled.

1.6 COORDINATION

A. Coordinate installation of lightning protection with installation of other building systems and components, including electrical wiring, supporting structures and building materials, metal bodies requiring bonding to lightning protection components, and building finishes.

B. Coordinate installation of air terminals attached to roof systems with roofing manufacturer and Installer.

C. Flashings of through-roof assemblies shall comply with roofing manufacturers' specifications.

PART 2 - PRODUCTS

2.1 MANUFACTURERS: Subject to compliance with requirements, provide products by one of the following:

1. East Coast Lightning Equipment Inc.
2. ERICO International Corporation.
3. Harger.
4. Heary Bros. Lightning Protection Co. Inc.
5. Independent Protection Co.
6. Preferred Lightning Protection.
7. Robbins Lightning, Inc.
8. Thompson Lightning Protection, Inc.

2.2 LIGHTNING PROTECTION SYSTEM COMPONENTS

A. Provide lightning protection system components of types, sizes, ratings for class of service indicated, which comply with manufacturer's standard materials, design and construction in accordance with published product information and as required for a complete installation. Where more than one type of component meets requirements, selection is Installer's option. Where type or material is not otherwise indicated comply with NFPA 78 and UL 96 standards.

B. Comply with UL 96 and NFPA 780.

C. Roof-Mounted Air Terminals: NFPA 780, Class II, copper unless otherwise indicated.

1. Air Terminals More than 24 Inches Long: With brace attached to the terminal at not less than half the height of the terminal.
2. Single-Membrane, Roof-Mounted Air Terminals: Designed specifically for single-membrane roof system materials. Comply with requirements in Division 07 roofing Sections.

D. Main and Bonding Conductors: Copper.

E. Main Conductors: Copper cable; strand dia. 0.064"; 0.095#/ft.; 98,600 circular mils.

F. Secondary Conductors: Copper cable; strand dia. 0.064"; 10 strands.

G. Ground Rods: Copper-clad steel, 3/4 inch in diameter by 10 feet long.

PART 3 - EXECUTION

3.1 INSTALLATION

A. Install lightning protection systems as indicated in accordance with equipment manufacturer's written instructions, in compliance with applicable requirements of NFPA 70, NFPA 78 and with UL's lightning protection standards to ensure that lightning protection systems comply with requirements.

B. Coordinate with other work, including electrical wiring and roofing work as necessary to interface installation of lightning protection system with other work.

C. Install conductors with direct paths from air terminals to ground connections avoiding sharp bends and narrow loops.

D. Install arrestors as close as practical to equipment they are protecting. Install appropriate unit at main electrical service entrance equipment.

E. Install lightning protection components and systems according to UL 96A and NFPA 780.

F. Install conductors with direct paths from air terminals to ground connections. Avoid sharp bends.

G. Conceal the following conductors:

1. System conductors.
2. Down conductors.
3. Interior conductors.
4. Conductors within normal view of exterior locations at grade within 200 feet of building.

H. Air Terminals on Single-Ply Membrane Roofing: Comply with roofing membrane and adhesive manufacturer's written instructions.

I. Bond extremities of vertical metal bodies exceeding 60 feet in length to lightning protection components.

J. Bond lightning protection components with intermediate-level interconnection loop conductors to grounded metal bodies of building at 60-foot intervals.

K. Cable Connections: Use exothermic-welded connections for all conductor splices and connections between conductors and other components.

1. Exception: In single-ply membrane roofing, exothermic-welded connections may be used only below the roof level.

L. Grounding:

1. Provide dedicated ground rods at down conductors.
2. Bond ground rods to the ground loop at each down conductor.

M. Ground Loop: Install ground-level, potential equalization conductor and extend around the perimeter of structure.

1. Bury ground ring not less than 24 inches from building foundation.
2. Bond ground terminals to the ground loop.
3. Bond grounded building systems to the ground loop conductor within 12 feet of grade level.

3.2 CORROSION PROTECTION

A. Do not combine materials that can form an electrolytic couple that will accelerate corrosion in the presence of moisture unless moisture is permanently excluded from junction of such materials.

B. Use conductors with protective coatings where conditions cause deterioration or corrosion of conductors.

3.3 FIELD QUALITY CONTROL

A. Notify Architect at least 48 hours in advance of inspection before concealing lightning protection components.

B. UL Inspection: Meet requirements to obtain a UL Master Label for system.

C. LPI System Inspection: Meet requirements to obtain an LPI System Certificate.

3.4 TESTING

A. Upon completion of installation of lightning protection system, test resistance-to-ground with resistance tester. Where tests show resistance-to-ground is over 25 ohms, take appropriate action to reduce resistance to 25 ohms, or less, by driving additional ground rods. Provide to the Owner and the Engineer a certificate of compliance upon completion of testing.

END OF SECTION 26 4113

SECTION 26 4313 - SURGE PROTECTION FOR LOW-VOLTAGE ELECTRICAL POWER CIRCUITS

1. GENERAL

A. RELATED DOCUMENTS

1) Drawings and general provisions of the Contract, including General and Supplementary Conditions and Division 01 Specification Sections, apply to this Section.

B. DEFINITIONS

1) Inominal: Nominal discharge current.

2) MCOV: Maximum continuous operating voltage.

3) Mode(s), also Modes of Protection: The pair of electrical connections where the VPR applies.

4) MOV: Metal-oxide varistor; an electronic component with a significant non-ohmic current-voltage characteristic.

5) OCPD: Overcurrent protective device.

6) SCCR: Short-circuit current rating.

7) SPD: Surge protective device.

8) VPR: Voltage protection rating.

C. ACTION SUBMITTALS

1) Product Data: For each type of product.

(a) Include rated capacities, operating characteristics, electrical characteristics, and furnished specialties and accessories.
(b) Copy of UL Category Code VZCA certification, as a minimum, listing the tested values for VPRs, Inominal ratings, MCOVs, type designations, OCPD requirements, model numbers, system voltages, and modes of protection.

D. INFORMATIONAL SUBMITTALS

1) Field quality-control reports.

E. CLOSEOUT SUBMITTALS

1) Maintenance Data: For SPDs to include in maintenance manuals.

F. WARRANTY

1) Manufacturer's Warranty: Manufacturer agrees to replace or replace SPDs that fail in materials or workmanship within specified warranty period.

(a) Warranty Period: Five years from date of Substantial Completion.

2. PRODUCTS

A. GENERAL SPD REQUIREMENTS

1) SPD with Accessories: Listed and labeled as defined in NFPA 70, by a qualified testing agency, and marked for intended location and application.

2) Comply with NFPA 70.

3) Comply with UL 1449.

4) MCOV of the SPD shall be the nominal system voltage.

B. PANEL SUPPRESSORS

1) Manufacturers: Subject to compliance with requirements, available manufacturers offering products that may be incorporated into the Work include, but are not limited to, the following.

(a) ABB France.
(b) Advanced Protection Technologies Inc. (APT).
(c) Eaton Corporation.
(d) Emerson Electric Co.
(e) GE Zenith Controls.
(f) LEA International; Protection Technology Group.
(g) Leviton Manufacturing Co., Inc.
(h) PowerLogics, Inc.
(i) Schneider Electric Industries SAS.
(j) Siemens Industry, Inc.

2) SPDs: Comply with UL 1449, Type 2.

(a) Include LED indicator lights for power and protection status.
(b) Internal thermal protection that disconnects the SPD before damaging internal suppressor components.

3) Peak Surge Current Rating: The minimum single-pulse surge current withstand rating per phase shall not be less than 100 kA. The peak surge current rating shall be the arithmetic sum of the ratings of the individual MOVs in a given mode.

4) Comply with UL 1283.

5) Protection modes and UL 1449 VPR for grounded wye circuits with 480Y/277 V or 208Y/120 V, three-phase, four-wire circuits shall not exceed the following:

(a) Line to Neutral: 700 V for 208Y/120 V

(b) Line to Ground: 700 V for 208Y/120 V
(c) Neutral to Ground: 1200 V for 480Y/277 V or 700 V for 208Y/120 V
(d) Line to Line: 2000 V for 480Y/277 V or 1200 V for 208Y/120 V

6) Protection modes and UL 1449 VPR for 240/120-V, single-phase, three-wire circuits shall not exceed the following:

(a) Line to Neutral: 700 V.
(b) Line to Ground: 700 V.
(c) Neutral to Ground: 700 V.
(d) Line to Line: 1200 V.

7) SCCR: Equal or exceed 100 kA.

8) Inominal Rating: 10 kA.

C. ENCLOSURES

1) Indoor Enclosures: NEMA 250, Type 1.

D. CONDUCTORS AND CABLES

1) Power Wiring: Same size as SPD leads, complying with Section 260519.

3. EXECUTION

A. INSTALLATION

1) Comply with NECA 1.

2) Install an OCPD or disconnect as required to comply with the UL listing of the SPD.

3) Install SPDs with conductors between suppressor and points of attachment as short and straight as possible, and adjust circuit-breaker positions to achieve shortest and straightest leads. Do not splice and extend SPD leads unless specifically permitted by manufacturer. Do not exceed manufacturer's recommended lead length. Do not bond neutral and ground.

4) Use crimped connectors and splices only. Wire nuts are unacceptable.

5) Wiring:

(a) Power Wiring: Comply with wiring methods in Section 260519.

B. FIELD QUALITY CONTROL

1) Perform the following tests and inspections.

(a) Compare equipment nameplate data for compliance with Drawings and Specifications.
(b) Inspect anchorage, alignment, grounding, and clearances.

(c) Verify that electrical wiring installation complies with manufacturer's written installation requirements.

2) An SPD will be considered defective if it does not pass tests and inspections.

3) Prepare test and inspection reports.

C. STARTUP SERVICE

1) Complete startup checks according to manufacturer's written instructions.

2) Do not perform insulation-resistance tests of the distribution wiring equipment with SPDs installed. Disconnect SPDs before conducting insulation-resistance tests, and reconnect them immediately after the testing is over.

3) Energize SPDs after power system has been energized, stabilized, and tested.

D. DEMONSTRATION

1) Train Owner's maintenance personnel to operate and maintain SPDs.

END OF SECTION 26 4313

SECTION 265113 – LIGHTING FIXTURES AND LAMPS

1. GENERAL

A. Furnish and install all lighting fixtures, as herein specified, complete with accessories for safe and effective operation. All fixtures shall be installed and left in an operable condition with no broken, damaged or soiled parts.

B. All items furnished shall comply with the latest standards applicable such as U.L., NEMA, etc., and shall bear labels accordingly. All fixtures shall be the color specified or as selected by the Architect. Wherever fixtures have evident damage, they shall be restored to new condition or shall be replaced. Likewise, fixtures showing dirt, dust or fingerprints shall be restored to new condition or shall be replaced.

C. A PDF copy of light fixture factory shop drawings and cuts, showing fixture dimensions, photometric data, installation data and, if applicable, air handling data, shall be submitted to the Engineer for written approval 30 days after bid date. (Submission shall be made via the University's online project management system.)

D. Locate pendant, surface mounted or chain-hung industrial fixtures in mechanical rooms and similar spaces to avoid ductwork and piping. Locate around and between equipment to maximize the available light. Request a layout from the Engineer if uncertain about an installation.

E. Alternate fixtures may be substituted for types specified by name or catalog number. Proposed substitutions must be submitted to the Engineer ten working days prior to bid date for written approval to bid. This written approval will only be issued in addendum form.

F. Where emergency battery packs are provided with fixtures (if any), they shall be connected to an unswitched power line and wired in accord with the manufacturer's recommendations. Test buttons and indicator lamps shall be visible and accessible with fixture door open, or shall be remotely flush mounted in the ceiling adjacent to the fixture.

G. Where remote emergency lighting transfer relays are provided, they shall be flush mounted in the ceiling adjacent to a controlled fixture. They shall be connected to an unswitched power line and installed in accord with the manufacturer's recommendations. Test buttons and indicator lamps shall be visible and accessible without removing ceiling tiles or access panels.

H. All reflecting surfaces, glass or plastic lenses, downlighting cones and specular reflectors shall be handled with care during installation to avoid fingerprints or dirt deposits. It is preferred that louvers be shipped and installed with clear plastic bags to protect louvers. At close of project, and after construction air filters are changed, remove bags. Any louver or cone showing dirt or fingerprints shall be cleaned with solvent recommended by the manufacturer to a like-new condition, or replaced as necessary in order to turn over to the Owner new fixtures at beneficial occupancy.

I. Refer to architectural details as applicable for recessed soffit fixtures or wherever fixture installations depend upon work of other trades. Coordinate all installations with other trades. Verify dimensions of spaces for fixtures, and if necessary, adjust lengths to assure proper fit and illumination of diffuser and/or area below.

J. Warranty shall start at Final Project Completion.

2. VOLTAGE

A. All lighting fixtures will be rated 120 volts.

3. LED FIXTURES

LED SOURCES

A. LED's shall be manufactured by a manufacturer who has produced commercial LEDs for a minimum of five (5) years.
B. Lumen Output – minimum initial delivered lumen output of the luminaire shall be as follows for the lumens exiting the luminaire in the 0-360 degree zone - as measured by IESNA Standard LM-79-08 in an accredited lab. Exact tested lumen output shall be clearly noted on the shop drawings.
C. Lumen output shall not decrease by more than 20% over the minimum operational life of 50,000 hours at the rated ambient operating temperature.
D. Individual LEDs shall be connected such that a catastrophic loss or the failure of one LED will not result in the loss of the entire luminaire.
E. LED Boards shall be suitable for field maintenance and have with plug-in connectors. LED boards shall be upgradable
F. Light Color/Quality:
    a) Correlated Color temperature (CCT) range as per specification, between 3000K, 3500K and 4000K shall be correlated to chromaticity as defined by the absolute (X,Y) coordinates on the 2-D CIE chromaticity chart.
    b) Color shift over 6,000 hours shall be <0.007 change in u' v' as demonstrated in IES LM80 report.
    c) The color rendition index (CRI) shall be 80 or greater
    d) LED boards to be tested for color consistency and shall be within a space of 2.5 MacAdam ellipses on the CIE chromaticity chart.

LED DRIVERS

A. Driver: Acceptable manufacturer: eldoLED, Sylvania, or Philips that meet or exceed the criteria herein.
B. Ten-year expected life while operating at maximum case temperature and 90 percent non-condensing relative humidity.
C. Driver should be UL Recognized under the component program and shall be modular for simple field replacement.
D. Electrical characteristics: 120 volt, UL Listed, CSA Certified, Sound Rated A+. Driver shall be > 80% efficient at full load across all input voltages. Input wires shall be 18AWG solid copper minimum.
E. Dimming: Driver shall be suitable for full-range dimming. The luminaire shall be capable of continuous dimming without perceivable flicker over a range of 100 percent to 0.1 percent of rated lumen output with a smooth shut off function unless specifically scheduled otherwise.
F. Dimming shall be controlled by a 0-10V signal unless specifically scheduled.
G. Driver shall include ability to provide no light output when the control signal drops below 0.5 V, and shall consume 0.5 watts or less in this standby.
H. Driver shall be capable of configuring a linear or logarithmic dimming curve.
I. Drivers shall track evenly across multiple fixtures at all light levels, and shall have an input signal to output light level that allows smooth adjustment over the entire dimming range regardless of the controller type
J. Flicker: Driver and luminaire electronics shall deliver illumination that is free from objectionable flicker as measured by flicker index (ANSI/IES RP-16-10). At all points within the dimming range from 100-0.1 percent luminaire shall have: Less than 1 percent

flicker index at frequencies below 120 Hz and less than 12 percent flicker index at 120 Hz, and shall not increase at greater than 0.1 percent per Hz to a maximum of 80 percent flicker index at 800Hz

K. Driver disconnect shall be provided where required to comply with codes.

LED ELECTRICAL

A. THD: Total harmonic distortion (current and voltage) induced into an AC power line by a luminaire shall not exceed 20 percent at any standard input voltage and meet ANSI C82.11 maximum allowable THD requirements.
B. Surge Suppression: The luminaire shall include surge protection to withstand high repetition noise and other interference. Withstand up to a 1,000 volt surge without impairment of performance as defined by ANSI C62.41 Category A. To reduce false circuit breaker tripping due to turn on inrush, the following statement ensures that electronic dimming driver will meet NEMA inrush recommendations.
C. Rush Current: Meet or exceed NEMA 410 driver inrush standard of 430 Amps per 10 Amps load with a maximum of 370 Amps2 – seconds.
D. RF Interference: The luminaire and associated on-board circuitry must meet Class A emission limits referred in Federal Communications Commission (FCC) Title 47, Subpart B, Section 15 Non-Consumer requirements for EMI/RFI emissions
E. Driver must support automatic adaptation, allowing for future luminaire upgrades and enhancements and deliver improved performance.
F. Power Factor: The luminaire shall have a power factor of 90% or greater at all standard operating voltages and full luminaire output.

4. LIGHT FIXTURE GENERAL REQUIREMENTS

A. LED Recessed Lighting Fixtures - General Requirements

(1) The following are minimum requirements for recessed LED fixtures for lay-in grid, gypsum board, plaster and concealed spline ceilings. Surface-mounted LED fixture requirements shall be similar.

(2) Housings shall be a minimum of 4" depth, premium grade, constructed of a minimum 22 gauge die embossed or stiffened cold rolled pre-treated rust-resistant steel.

(3) All parts shall be finished with polyester powder or white baked enamel (85% minimum reflectance) painted after fabrication. All wiring shall be type TFN, or THWN and shall be covered by the steel driver cover or wiring channel. Exposed wiring is not acceptable. Connection wiring shall be accessible thru a hinged access plate above driver channel in top of unit.

(4) The complete light fixture unit shall be UL listed and labeled. Other agency listings may be acceptable with written approval from the Engineer.

(5) Fixture lens doors shall be reversible, hinged, painted after fabrication, with spring-loaded or other mechanically stable positive action latches.

(6) Lens shall be as specified for each fixture type. If a specific manufacturer and series number of lens is listed, the substitute shall be of the exact specification (thickness, prism configurations, transparency, efficiency, photometric distribution, hardness, vandal-resistance, etc.). Minimum average thickness of any prismatic lens shall be .125".

(7) Fixture trim and/or flanges shall conform with ceiling constructions as required. Verify all types prior to submission of shop drawings and indicate any special types on submittals. Fixtures installed in drywall or plaster ceilings to be provided with flange, screed and swing gate anchoring system.

(8) All fixtures shall be furnished with hold down clips to meet applicable seismic codes, four clips per fixture minimum or the equivalent thereof in the installation trim. Verify thickness of drywall or plaster ceilings prior to submission of shop drawings, to allow for proper trim adjustment.

(9) Support fixtures with one hanger wire at each end. Hanger wires shall be installed within 15° of plumb, maximum or additional support shall be provided. Wires shall be attached to the fixture body and to the building structure - not to the supports of other work or equipment.

(10) Each type of lay-in fixture shall be furnished with the proper housing flange or lip to suit the type of lay-in grid(s) being utilized on the project. The Contractor is to verify if narrow or standard grid members are being furnished and provide the proper type of light fixture trim. Indicate any special trims on shop drawing submittals.

B. Industrial and Striplight LED Fixtures - General Requirements

(1) Units shall have die-formed heavy gauge cold rolled steel channels and die-embossed reflectors.

(2) Finishes to be coated with a gloss powder paint or baked enamel finish with a minimum 85% reflectance.

(3) Units to have aligner clips where required for a continuous row appearance. Where continuous rows exceed twelve feet in length, provide a "unistrut" channel or similarly adequate mounting to stiffen and align row.

(4) Units to have captive latches for all covers and wire guards where specified. Wire guards shall be heavy-duty #14 wire gauge minimum with corrosion-resistant plated or vinyl finish.

(5) Units to be UL listed.

(6) Mounting brackets and hanging mechanisms shall be as specified in fixture descriptions, or as required. Allow a generous safety margin with all support systems, as recommended by the manufacturer.

C. Recessed Downlight - General Requirements

(1) Fixture to have an extruded or die-cast aluminum housing. Retaining mechanism shall provide easy access to LED array and driver box.

(2) Unit to have a corrosion-resistant steel junction box with hinged access covers and thermal protector.

(3) Mounting/plaster frame to be heavy gauge steel with finishing trim friction support springs, for the required ceiling thickness. Trim to be of color as selected by the Architect.

(4) Optical system to consist of a sealed LED module with diffuser.

(5) Provide telescoping channel bar hangers that adjust vertically and horizontally.

(6) Fixtures to be UL listed for thru-branch circuit wiring, recessed, and damp locations. Where installed in plaster or drywall or other inaccessible ceiling type, they shall be U.L. listed for bottom access.

D. Exit Lights - General Requirements

(1) Housings and canopies shall be die-cast aluminum or corrosion resistant steel. Edge-lit clear acrylic panel shall be provided where scheduled. Mountings shall be wall or ceiling, universal type, to suit the installation conditions.

(2) Provide with stencil face, lettering color red, of sizes in accord with code, or as otherwise specified.

(3) Provide single or double face as scheduled, indicated on plans or as required by the local authority having jurisdiction. Single face exit lights shall not be readable from the reverse side; acrylic blade style lights shall be furnished with an opaque barrier to block the reverse text image. Adjust installation position if required for clear visibility, in accord with applicable codes.

(4) Complete unit to be finished in color as selected by the Architect. Provide directional arrows as indicated on plans, as scheduled to suit the means of egress or as required by the local authority having jurisdiction.

(5) All exit signs shall be long life LED type.

(6) Where emergency backup battery packs are provided with exit lights, they shall have capacities for continuous operation per applicable codes. They shall have reserve battery capacity to operate remote lamps where indicated.

5. LIGHTING FIXTURE SCHEDULE

A. Refer to the contract drawings for Lighting Fixture Schedule

6. CONTROLS

A. Refer to drawings for switching and controls.

B. Low voltage lighting control conductors are to be installed in conduit. Where necessary to directly connect to devices cabling may be run exposed for a maximum distance of 18”. Conduit shall be provided with plastic bushing where cabling exits the raceway.

END OF SECTION 26 5113

SECTION 27 0501 **–** GENERAL PROVISIONS - TELECOMMUNICATIONS

PART 1 - GENERAL

1.1 The Instructions to Bidders, General and Special Conditions, and all other contract documents shall apply to the Contractor's work as well as to each of his Sub Contractor's work. Each Contractor is directed to familiarize himself in detail with all documents pertinent to this Contract. In case of conflict between these General Provisions and the General and/or Special Conditions, the affected Contractor shall contact the Engineer for clarification and final determination.

1.2 Each Contractor shall be governed by any alternates, unit prices and Addenda or other contract documents insofar as they may affect his part of the work.

1.3 All materials and installation shall comply with University construction standards. These standards are available at: http://www.uky.edu/cpmd/design-standards. Special attention shall be given to Divisions 02, 08, 26, 27 and 28. The Contractor shall familiarize himself with the published standards. In the event of a conflict between these standards and the Contract Documents the most stringent requirement shall be met.

1.4 The work included in this division consists of the furnishing of all labor, equipment, transportation, supplies, material and appurtenances and performing all operations necessary for the satisfactory installation of complete and operating Electrical Systems indicated on the drawings and/or specified herein.

1.5 Any materials, labor, equipment or services not mentioned specifically herein which may be necessary to complete or perfect any part of the Electrical Systems in a substantial manner, in compliance with the requirements stated, implied, or intended in the drawings and specifications, shall be included as part of this Contract. The Contractor shall give written notice of any materials or apparatus believed inadequate or unsuitable; in violation of laws, ordinances, rules or regulations of authorities having jurisdiction; and any necessary items of work omitted a minimum of ten days prior to bid. In the absence of such written notice and by the act of submitting his bid, it shall be understood that the Contractor has included the cost of all required items in his bid, and that he will be responsible for the approved satisfactory functioning of the entire system without extra compensations.

1.6 It is not the intent of this section of the specifications (or the remainder of the contract documents) to make any specific Contractor, other than the Contractor holding the prime contract, responsible to the Owner, Architect and Engineer. All transactions such as submittal of shop drawings, claims for extra costs, requests for equipment or materials substitution, shall be done through the Contractor to the Architect (if applicable), then to the Engineer.

1.7 This section of the Specifications or the arrangement of the contract documents shall not be construed as an attempt to arbitrarily assign responsibility for work, material, equipment or services to a particular trade Contractor or Sub-Contractor. Unless stated otherwise, the subdivision and assignment of work under the various sections shall be the responsibility of the Contractor holding the prime contract.

1.8 It is the intent of this Contract to deliver to the Owners a "like new" project once work is complete. Although plans and specifications are complete to the extent possible, it shall be responsibility of the Contractors involved to remove and/or relocate or re-attach any existing or new systems which interfere with new equipment or materials to be installed by other trades without additional cost to the Owner.

1.9 In general, and to the extent possible, all work shall be accomplished without interruption of the existing facilities' operations. Each Contractor shall advise the Architect, Owner and Engineer in

writing at least one week prior to the deliberate interruption of any services. The Owners shall be advised of the exact time that interruption will occur and the length of time the interruption will occur. Failure to comply with this requirement may result in complete work stoppage by the Contractors involved until a complete schedule of interruptions can be developed. Contractor will not be entitled to additional compensation due to work stoppage mandated by unscheduled interruption.

1.10 Whenever utilities are interrupted, either deliberately or accidentally, the Contractor shall work continuously to restore said service. The Contractor shall provide tools, materials, skilled journeymen of his own and other trades as necessary, premium time as needed and coordination with all applicable utilities, including payment of utility company charges (if any), all without requests for extra compensation to the Owner, except where otherwise provided for in the contract for the work. The contractor shall abide by the requirements on the Special Conditions and the University's outage request program.

1.11 Definitions:

1.11.1 Prime Contractor - The Contractor who has been engaged by the Owner in a contractual relationship to accomplish the work.

1.11.2 Electrical Contractor - Any Contractor whether bidding or working independently or under the supervision of a General Contractor, that is: the one holding the Prime Contract and who installs any type of Electrical work, such as: power, lighting, intercom, fire detection and alarm, security, video, etc.

1.11.3 Electrical Sub-Contractor - Each or any Contractor contracted to, or employed by, the Electrical Contractor for any work required by the Electrical Contractor.

1.11.4 Low Voltage Contractor - Any Contractor whether bidding or working independently or under the supervision of a General Contractor, that is: the one holding the Prime Contract and who installs any type of Electrical work, such as: television, telecommunications, data, fiber optic, intercom, fire detection and alarm, security, video, underground or overhead electrical, etc.

1.11.5 Engineer - The Consulting Mechanical-Electrical Engineers either consulting to the Owner, Architect, other Engineers, etc.

1.11.6 Architect - The Architect of Record for the project, if any.

1.11.7 Furnish - Deliver to the site in good condition.

1.11.8 Provide - Furnish and install in complete working order.

1.11.9 Install - Install equipment furnished by others in complete working order.

1.11.10 Contract Documents - All documents pertinent to the quality and quantity of all work to be performed on the project. Includes, but not limited to: Plans, Specifications, Addenda, Instructions to Bidders, (both General and Sub-Contractors), Unit Prices, Shop Drawings, Field Orders, Change Orders, Cost Breakdowns, Construction Manager's Assignments, Architect's Supplemental Instructions, Periodical Payment Requests, etc.

1.12 Note: Any reference within these specifications to a specific entity, i.e., "Electrical Contractor" is not to be construed as an attempt to limit or define the scope of work for that entity or assign work to a specific trade or contracting entity. Such assignments of responsibility are the responsibility of the Contractor or Construction Manager holding the prime contract, unless otherwise provided herein.

PART 2 - INTENT

2.1 It is the intent of these specifications and all associated drawings that the Contractor provide finished work, tested, and ready for operation. Wherever the word "provide" is used, it shall mean "furnish and install complete and ready for use."

2.2 Minor details not usually shown or specified, but necessary for the proper installation and operation, shall be included in the work, the same as if herein specified or shown.

PART 3 - DRAWINGS AND SPECIFICATIONS

3.1 The drawings are diagrammatic only and indicate the general arrangement of the systems and are to be followed insofar as possible. If deviations from the layouts are necessitated by field conditions, detailed layouts of the proposed departures shall be submitted in writing to the Engineer for approval before proceeding with the work. The Contract Drawings are not intended to show every vertical or horizontal offset which may be necessary to complete the systems. Contractors shall, however, anticipate that additional offsets may be required and submit their bid accordingly.

3.2 The drawings and specifications are intended to supplement each other. No Contractor or supplier shall take advantage of conflict between them, or between parts of either, but should this condition exist, the Contractor or supplier shall request a clarification of the condition at least ten days prior to the submission of bids so that the condition may be clarified by Addendum. In the event that such a condition arises after work is started, the interpretation of the Engineer shall be the determining factor. In all instances, unless modified in writing and agreed upon by all parties thereto, the Contract to accomplish the work shall be binding on the affected Contractor.

3.3 The drawings and specifications shall be considered to be cooperative and complimentary and anything appearing in the specifications which may not be indicated on the drawings or conversely, shall be considered as part of the Contract and must be executed the same as though indicated by both.

3.4 This Contractor shall make all his own measurements in the field and shall be responsible for correct fitting. He shall coordinate this work with all other branches of work in such a manner as to cause a minimum of conflict or delay.

3.5 The Engineer shall reserve the right to make minor adjustments in location of conduit, fixtures, outlets, switches, etc., where he considers such adjustments desirable in the interest of concealing work or presenting a better appearance.

3.6 Each Contractor shall evaluate ceiling heights called for on Architectural Plans. Where the location of Electrical equipment may interfere with ceiling heights, the Contractor shall call this to the attention of the Engineer in writing prior to making the installation. Any such changes shall be anticipated and requested sufficiently in advance so as to not cause extra work on the part of the Contractor or unduly delay the work.

3.7 Should overlap of work between the various trades become evident, this shall be called to the attention of the Engineer. In such event neither trade shall assume that he is to be relieved of the work which is specified under his branch until instructions in writing are received from the Engineer.

3.8 The drawings are intended to show the approximate location of equipment, materials, etc. Dimensions given in figures on the drawings shall take precedence over scaled dimensions and all dimensions whether given in figures or scaled shall be verified in the field. In case of conflict between small and large scale drawings, the larger scale drawings shall take precedence.

3.9 The Low Voltage Contractor and his Sub Contractors shall review all drawings in detail as they may relate to his work (structural, architectural, site survey, mechanical, electrical, etc.). Review all drawings for general coordination of work, responsibilities, ceiling clearances, wall penetration points, chase access, elevations, etc. Make any pertinent coordination or apparent conflict comments to the Engineers at least ten days prior to bids, for issuance of clarification by written addendum.

3.10 Where on any of the drawings a portion of the work is drawn out and the remainder is indicated in outline, or not indicated at all, the parts drawn out shall apply to all other like portions of the work. Where ornament or other detail is indicated by starting only, such detail shall be continued throughout the courses or parts in which it occurs and shall also apply to all other similar parts of the work, unless otherwise indicated.

PART 4 - EXAMINATION OF SITE AND CONDITIONS

4.1 Each Contractor shall inform himself of all of the conditions under which the work is to be performed, the site of the work, the structure of the ground, the obstacles that may be encountered, the availability and location of necessary facilities and all relevant matters concerning the work. All Contractors shall carefully examine all Drawings and Specifications and inform themselves of the kind and type of materials to be used throughout the project and which may, in any way, affect the execution of his work.

4.2 Each Contractor shall fully acquaint himself with all existing conditions as to ingress and egress, distance of haul from supply points, routes for transportation of materials, facilities and services, availability of temporary or permanent utilities, etc. The Contractor shall include in his work all expenses or disbursements in connection with such matters and conditions. Each Contractor shall verify all work shown on the drawings and conditions at the site, and shall report in writing to the Engineer ten days prior to bid, any apparent omissions or discrepancies in order that clarifications may be issued by written addendum. No allowance is to be made for lack of knowledge concerning such conditions after bids are accepted.

4.3 The Low Voltage Contractor is required to provide coordination drawings, data and collaboration for all aspects of his work in accordance with the general and special conditions – Divisions 20, 22, 23, 26 and 28 the Construction Manager’s procedures.

PART 5 - EQUIPMENT AND MATERIALS SUBSTITUTIONS OR DEVIATIONS

5.1 When any Contractor requests review of substitute materials and/or equipment, and when under an approved formal alternate proposal, it shall be understood and agreed that such substitution, if approved, will be made without additional cost regardless of changes in connections, spacing, service, mounting, etc. In all cases where substitutions affect other trades, the Contractor offering such substitutions shall advise all such Contractors of the change and shall reimburse them for all necessary changes in their work. Any drawings, Specifications, Diagrams, etc., required to describe and coordinate such substitutions or deviations shall be professionally prepared at the responsible Contractor's expense. Special Note: Review of Shop Drawings by the Engineer does not absolve the Contractor of this responsibility.

5.2 References in the specifications to any article, device, product, material, fixture, form, or type of construction by name, make, or catalog number shall be interpreted as establishing a standard of quality and shall not be construed as limiting competition. Each Contractor, in such cases, may, at his option, use any article, device, product, material, fixture, form, or type of construction which in the judgment of the Engineer is equivalent to that specified, provided the provisions of paragraph (A) immediately preceding are met. Substitutions shall be submitted to the Engineer a minimum of ten days prior to bid date for approval to bid in written form thru addenda or other method selected by the Engineer. If prevailing laws of cities, towns, states or countries are more stringent than these specifications regarding such substitutions, then those laws shall prevail over these

requirements.

5.3 Wherever any equipment and material is specified exclusively only such items shall be used unless substitution is accepted in writing by the engineers.

5.4 Each Contractor shall furnish along with his proposal a list of specified equipment and materials which he proposes to provide. Where several makes are mentioned in the Specifications and the Contractor fails to state which he proposes to furnish, the Engineer shall have the right to choose any of the makes mentioned without change in price.

PART 6 - SUPERVISION OF WORK

6.1 Each Contractor and Sub-Contractors shall personally supervise the work or have a competent superintendent on the project site at all times during progress of the work, with full authority to act for him in matters related to the project.

PART 7 - CODES, RULES, PERMITS, FEES, REGULATIONS, ETC.

7.1 The Contractor shall give all necessary notices, obtain and pay for all permits, government sales taxes, fees, and other costs including utility connections or extensions, in connection with his work. As necessary, he shall file all required plans, utility easement requests and drawings, survey information on line locations, load calculations, etc., prepare all documents and obtain all necessary approvals of all utility and governmental departments having jurisdiction; obtain all required certificates of inspection for his work and deliver same to the Engineer before request for acceptance and final payment for the work.

7.2 Ignorance of Codes, Rules, regulations, utility company requirements, laws, etc., shall not diminish or absolve Contractor's responsibilities to provide and complete all work in compliance with such.

7.3 The Contractor shall include in the work, without extra cost, any labor, materials, services, apparatus or drawings required in order to comply with all applicable laws, ordinances rules and regulations, whether or not shown on drawings and/or specified.

7.4 All materials furnished and all work installed shall comply with the current edition of the National Electrical Codes, National Fire Codes of the National Fire Protection Association, the requirements of local utility companies, owners private utility standards and with the requirements of all governmental agencies or departments having jurisdiction.

7.5 All material and equipment for the low voltage systems shall bear the approval label, or shall be listed by the Underwriters' Laboratories, Incorporated. Listings by other testing agencies may be acceptable with written approval by the Engineer.

7.6 All low voltage work is to be constructed and installed in accordance with plans and specifications which have been approved in their entirety and/or reflect any changes requested by the University Fire Marshal, as applicable or required. Electrical work shall not commence until such plans are in the hands of the Electrical Contractor.

7.7 The Contractor shall insure that his work is accomplished in accord with OSHA Standards and any other applicable government requirements.

7.8 Where conflict arises between any code and the plans and/or specifications, the code shall apply except in the instance where the plans and specifications exceed the requirements of the code. Any changes required as a result of these conflicts shall be brought to the attention of the Engineer at least ten working days prior to bid date, otherwise the Contractor shall make the required

changes at his own expense. The provisions of the codes constitute minimum standards for wiring methods, materials, equipment and construction and compliance therewith will be required for all electrical work, except where the drawings and specifications require better materials, equipment, and construction than these minimum standards, in which case the drawings and specifications shall be the minimum standards.

PART 8 - COST BREAKDOWNS

8.1 Within thirty days after acceptance of the Contract, each Contractor is required to furnish to the Engineer one copy of a detailed cost breakdown on each respective area of work. These cost breakdowns shall be made on forms provided or approved by the Engineer or Architect. Payments will not be made until satisfactory cost breakdowns are submitted.

PART 9 - GUARANTEES AND WARRANTIES

9.1 Each Contractor shall unconditionally guarantee all equipment, apparatus, materials, and workmanship entering into this Contract to be the best of its respective kind and shall replace all parts at his own expense, which fail or are deemed defective within one year from final acceptance of the work by the Engineer. The effective date of completion of the work shall be the date each or any portion of the work is accepted by the Engineer as being substantially complete.

9.2 Items of equipment which have longer guarantees, as called for in these specifications or as otherwise offered by the manufacturer, such as generators, engines, batteries, transformers, etc., shall have warranties and guarantees completed in order, and shall be in effect at the time of final acceptance of the work by the Engineer. The Contractor shall present the Engineer with such warranties and guarantees at the time of final acceptance of the work. The Owner reserves the right to use equipment installed by the Contractor prior to date of final acceptance. Such use of equipment shall in no way invalidate the guarantee except that Owner shall be liable for any damage to equipment during this period due to negligence of his operator or other employee.

PART 10 - INSPECTION, APPROVALS AND TESTS

10.1 Before requesting a final review of the installation from the Architect and/or Engineer, the Contractor shall thoroughly inspect his installation to assure that the work is complete in every detail and that all requirements of the Contract Documents have been fulfilled. Failure to accomplish this may result in charges from the Architect and/or Engineers for unnecessary and undue work on their part.

10.2 The Contractor shall provide as a part of this contract electrical inspection by a competent Electrical Inspection Agency, licensed to provide such services. The name of this agency shall be included in the list of materials of the Form of Proposal by the Contractor. All costs incidental to the provision of electrical inspections shall be borne by the Electrical Contractor.

10.3 The Contractor shall advise each Inspection Agency in writing (with an information copy of the correspondence to the Architect and/or Engineer) when he anticipates commencing work. Failure of the Inspection Agency to inspect the work in the stage following and submit the related reports may result in the Contractor's having to expose concealed work not so inspected. Such exposure will be at the expense of the responsible Contractor.

10.4 Inspections shall be scheduled for rough as well as finished work. The rough inspections shall be divided into as many inspections as may be necessary to cover all roughing-in without fail. Report of each such inspection visit shall be submitted to the Architect, Engineer and the Contractor within three days of the inspection.

10.5 Approval by an Inspector does not relieve the Contractor from the responsibilities of furnishing equipment having a quality of performance equivalent to the requirements set forth in these plans

and specifications. All work under this contract is subject to the review of the Architect and/or Engineer, whose decision is binding.

10.6 Before final acceptance, the Contractor shall furnish three copies of the certificates of final approval by the Electrical Inspector (as well as all other inspection certificates) to the Engineer with one copy of each to the appropriate government agencies, as applicable. Final payment for the work shall be contingent upon completion of this requirement.

10.7 The Contractor shall test all wiring and connections for continuity and grounds before equipment and fixtures are connected, and when indicated or required, demonstrate by Megger Test the insulation resistance of any circuit or group of circuits. Where such tests indicate the possibility of faulty insulation, locate the point of such fault, pull out the defective conductor, replacing same with new and demonstrate by further test the elimination of such defect.

PART 11 - CHANGES IN WORK

REFER TO GENERAL AND SPECIAL CONDITIONS.

PART 12 - CLAIMS FOR EXTRA COST

REFER TO GENERAL AND SPECIAL CONDITIONS.

PART 13 - SURVEYS, MEASUREMENTS AND GRADES

13.1 The Contractor shall lay out his work and be responsible for all necessary lines, levels, elevations and measurements. He must verify the figures shown on the drawings before laying out the work and will be held responsible for any error resulting from his failure to do so.

13.2 The Contractor shall base all measurements, both horizontal and vertical from established bench marks. All work shall agree with these established lines and levels. Verify all measurements at site and check the correctness of same as related to the work.

13.3 Should the Contractor discover any discrepancy between actual measurements and those indicated, which prevents following good practice or the intent of the drawings and specifications, he shall notify the Engineer thru normal channels of job communication and shall not proceed with his work until he has received instructions from the Engineer.

PART 14 - TEMPORARY USE OF EQUIPMENT

14.1 The permanent electrical equipment, when installed, may be used for temporary services, subject to and owner consent of the Engineer. Should the permanent systems be used for this purpose, each Contractor shall pay for all temporary connections required and any replacements required due to damage without cost, leaving the equipment and installation in "as new" condition. The Contractor may be required to bear utility costs, user fees, etc.

14.2 Permission to use the permanent equipment does not relieve the Contractors who utilize this equipment from the responsibility for any damages to the building construction and/or equipment which might result because of its use.

PART 16 - RECORD DRAWINGS

16.1 The Contractor shall insure that any deviations from the design are being recorded daily or as necessary on record drawings being maintained by the Contractor. Dimensions from fixed, visible permanent lines or landmarks shown in vertical and horizontal ways shall be utilized. Compli-

ance shall be a requirement for final payment. Pay particular attention to the location of underfloor or underground exterior in-contract or utility-owned or leased service lines, main switches and other appurtenances important to the maintenance and safety of the Electrical System. Deliver these record drawings to the Engineer at the completion of the work.

PART 17 - MATERIALS AND WORKMANSHIP

17.1 All electrical equipment, materials and articles incorporated in the work shall be new and of comparable quality to that specified. All workmanship shall be first-class and shall be performed by technicians skilled and regularly employed in their respective trades. The Contractor shall determine that the equipment he proposes to furnish can be brought into the building(s) and installed within the space available. All equipment shall be installed so that all parts are readily accessible for inspection, maintenance, replacement, etc. Extra compensation will not be allowed for relocation of equipment for accessibility or for dismantling equipment to obtain entrance into the building(s).

17.2 All conduit and/or conductors shall be concealed in or below walls, floors or above ceilings unless otherwise noted. All devices and wiring required shall be installed to make up complete systems as indicated on the drawings and specified herein.

17.3 All materials, where applicable, shall bear Underwriters' Laboratories label or that of another Engineer-approved testing agency, where such a standard has been established.

17.4 Each length of conduit, wireway, duct, conductor, cable, fitting, and device used in the electrical systems shall be stamped or indelibly marked with the makers mark or name.

17.5 All electrical equipment shall bear the manufacturer's name and address and shall indicate its electrical capacity and characteristics.

PART 18 - QUALIFICATIONS OF WORKMEN

18.1 All contractors bidding this project must have been a licensed company for a minimum of three years to qualify to bid this project. Individual employee experience does not supercede this requirement.

18.2 All low voltage contractors bidding the electrical work must have completed one project of 70% this contract cost size and two projects of 50% this subcontract cost size.

18.3 All work shall be accomplished by qualified workmen competent in the area of work for which they are responsible. Untrained and incompetent workmen as evidenced by their workmanship shall be relieved of their responsibilities in those areas. The Engineer shall reserve the right to determine the quality of workmanship of any workman and unqualified or incompetent workmen shall refrain from work in areas not satisfactory to him. Requests for relief of a workman shall be made through the normal channels of responsibility established by the Architect or the contract document provisions.

18.4 Special electrical systems, such as Fire Detection and Alarm Systems, Telecommunications or Data Systems, Video Systems, Special Electronic Systems, Control Systems, etc., shall be installed by workmen normally engaged or employed in these respective trades. As an exception to this, where small amounts of such work are required and are, in the opinion of the Engineer, within the competency of workmen directly employed by the Contractor involved, they may be provided by this Contractor.

PART 19 - CONDUCT OF WORKMEN

19.1 The Contractor shall be responsible for the conduct of all workmen under his supervision. Misconduct on the part of any workmen to the extent of creating a safety hazard, or endangering the lives and property of others, shall result in the prompt relief of that workman. The consumption or influence of alcoholic beverages, narcotics or illegally used controlled substances on the jobsite is strictly forbidden.

PART 20 - COOPERATION AND COORDINATION BETWEEN TRADES

20.1 The Contractor is expressly directed to read the General Conditions and all detailed sections of these specifications for all other trades and to study all drawings applicable to his work, including Architectural, Mechanical, Structural and other pertinent Drawings, to the end that complete coordination between trades will be effected.

20.2 Refer to Coordination Among Trades, Systems Interfacing and Connection of Equipment Furnished by Others section of these Specifications for further coordination requirements.

PART 21 - PROTECTION OF EQUIPMENT

21.1 The Contractor shall be entirely responsible for all material and equipment furnished by him in connection with his work and special care shall be taken to properly protect all parts thereof from damage during the construction period. Such protection shall be by a means acceptable to the Engineer. All rough-in conduit shall be properly plugged or capped during construction in a manner approved by the Engineer. Equipment damaged while stored on site either before or after installation shall be repaired or replaced (as determined by the Engineer) by the responsible Contractor.

PART 22 - SMOKE AND FIRE PROOFING

22

22.1 The Contractor shall not penetrate rated fire walls, ceilings or floors with conduit, cable, bus duct, wireway or other raceway system unless all penetrations are protected in a code compliant manner which maintains the rating of the assembly. Smoke and fire stop all openings made in walls, chases, ceiling and floors. Patch all openings around conduit, wireway, bus duct, etc., with appropriate type material to smoke stop walls and provide needed fire rating at fire walls, ceilings and floors. Smoke and fire proofing materials and method of application shall be approved by the local authority having jurisdiction.

PART 24 - FINAL CONNECTIONS TO EQUIPMENT

24.1 The roughing-in and final connections to all network connected equipment furnished under this and all other sections of the contract documents or by others, shall be included in the Contract and shall consist of furnishing all labor and materials for connection. The Contractor shall carefully coordinate with equipment suppliers, manufacturer's representatives, the vendor or other trades to provide complete electrical and dimensional interface to all such equipment (elevators, BMS panels, etc.)

PART 25 – NOT USED

PART 26 - ACCESSIBILITY

26.1

The Contractor shall be responsible for the sufficiency of the size of shafts and chases, the adequate clearance in partitions and above suspended ceilings for the proper installation of his work. He shall cooperate with the General Contractor (or Construction Manager) and all other Contractors whose work is in the same space, and shall advise each Contractor of his requirements. Such spaces and clearances

shall be kept to the minimum size required to ensure adequate clearance and access.

26.2 The Contractor shall locate all equipment which must be serviced, operated, or maintained in fully accessible positions. Equipment shall include but not be limited to junction boxes, pull boxes, contactors, panels, disconnects, controllers, switchgear, etc. Minor deviations from drawings may be made to allow for better accessibility, and any change shall be approved where the equipment is concealed.

26.3 Each Contractor shall provide (or arrange for the provision by other trades) the access panels for each concealed junction box, pull box, fixtures or electrical device requiring access or service as shown on Engineer's plans or as required. Locations of these panels shall be identified in sufficient time to be installed in the normal course of work. All access panels shall be installed in accord with the Architect's standards for such work.

26.4 Access Doors; in Ceilings or Walls:

26.4.1 In mechanical, electrical, or service spaces:

14 gauge aluminum brushed satin finish, 1" border.

26.4.3 In finished areas:

14 gauge primed steel with 1" border to accept the architectural finishes specified for the space. Confirm these provisions with the Architect prior to obtaining materials or installing any such work.

26.4.3 In fire or smoke rated partitions, access doors shall be provided that equal or exceed the required rating of the construction they are mounted in.

PART 27 - NOT USED

PART 28 - NOT USED

PART 29 - CUTTING AND PATCHING

29.1 Unless otherwise indicated or specified, the Contractor shall provide cutting and patching necessary to install the work specified in this Division. Patching shall match adjacent surfaces to the satisfaction of the Engineer and shall be in accord with the Architect's standards for such work, as applicable.

29.2 No structural members shall be cut without the approval of the Structural Engineer and all such cutting shall be done in a manner directed by him.

PART 30 - SLEEVES AND PLATES

30.1 Each Contractor shall provide and locate all sleeves and inserts required for his work before the floors and walls are built, or shall be responsible for the cost of cutting and patching required where sleeves and inserts were not installed, or where incorrectly located. Each Contractor shall do all drilling required for the installation of his hangers. Drilling of anchor holes may be prohibited in post-tensioned concrete construction, in which case the Contractor shall request approved methods from the Architect and shall carefully coordinate setting of inserts, etc., with the Structural Engineer and/or Architect.

30.2 Sleeves shall be provided for all conduit passing thru concrete floor slabs and concrete, masonry, tile and gypsum wall construction. Sleeves shall not be provided for piping running embedded in

concrete or insulating concrete slabs on grade, unless otherwise noted.

30.3 Where sleeves are placed in exterior walls below grade, the space between the pipe or conduit and the sleeves shall be packed with oakum and lead, mechanical waterstop or other approved material and made completely water tight by a method approved by the Engineer and/or Architect.

30.4 Where conduit motion due to expansion and contraction will occur, make sleeves of sufficient diameter to permit free movement of pipe. Check floor and wall construction finishes to determine proper length of sleeves for various locations; make actual lengths to suit the following:

30.4.1 Terminate sleeves flush with walls, partitions and ceiling.

PART 31 - WEATHERPROOFING

31.1 Where any work pierces waterproofing, including waterproof concrete, the method of installation shall be as approved by the Architect and/or Engineer before work is done. The Contractor shall furnish all necessary sleeves, caulking and flashing required to make openings absolutely watertight.

31.2 Wherever work penetrates roofing, it shall be done in a manner that will not diminish or void the roofing guarantee or warranty in any way. Coordinate all such work with the roofing installer.

PART 32 - OPERATING INSTRUCTIONS

32.1 Upon completion of all work and all tests, each Contractor shall furnish the necessary skilled labor and helpers for operating his systems and equipment for a period of three days of eight hours each, or as otherwise specified. During this period, instruct the Owner or his representative fully in the operations, adjustment, and maintenance of all equipment furnished. Give at least one week's written notice to the Owner, Architect and Engineer in advance of this period. The Engineer may attend any such training sessions or operational demonstrations. The Contractor shall certify in writing to the Engineer that such demonstrations have taken place, noting the date, time and names of the Owner's representative that were present.

32.2 Each Contractor shall furnish three complete bound sets for approval to the Engineer of typewritten and/or blueprinted instructions for operating and maintaining all systems and equipment included in this contract. All instructions shall be submitted in draft, for approval, prior to final issue. Manufacturer's advertising literature or catalogs will not be acceptable for operating and maintenance instructions.

32.3 Each Contractor, in the above mentioned instructions, shall include the maintenance schedule for the principal items of equipment furnished under this contract and a detailed, easy to read parts list and the name and address of the nearest source of supply.

PART 33 - SCAFFOLDING, RIGGING AND HOISTING

33.1 The Contractor shall furnish all scaffolding, rigging, hoisting, and services necessary for erection and delivery into the premises of any equipment and apparatus furnished. Remove same from premises when no longer required.

PART 34 - CLEANING

34.1 The Contractor shall, at all times, keep the area of his work presentable to the public and clean of rubbish caused by his operations; and at the completion of the work, shall remove all rubbish, all of his tools, equipment, temporary work and surplus materials, from and about the premises, and shall leave the work clean and ready for use. If the Contractor does not attend to such cleaning

immediately upon request, the Engineer may cause cleaning to be done by others and charge the cost of same to the responsible Contractor. Each Contractor shall be responsible or all damage from fire which originates in, or is propagated by, accumulations of his rubbish or debris.

34.2 After completion of all work and before final acceptance of the work, each Contractor shall thoroughly clean all equipment and materials and shall remove all foreign matter such as grease, dirt, plaster, labels, stickers, etc., from the exterior of materials, equipment and all associated fabrication. Pay particular attention to finished area surfaces such as lighting fixture lenses, lamps, reflectors, panels, etc.

PART 35 - PAINTING

35.1 Each fixture device, panel, junction box, etc., that is located in a finished area shall be provided with finish of color and type as selected or approved by the Architect or Engineer. If custom color is required, it shall be provided at no additional cost to the Owner. All other equipment, fixtures or devices located in finished or unfinished areas, that are not required to have or are provided with finish color or coating shall be provided in a prime painted condition, ready to receive finish paint or coating. All galvanized metal in finished areas shall be properly prepared with special processes to receive finish paint as directed and approved by the Architect.

PART 36 - INDEMNIFICATION

36.1 Refer to the General Conditions and Special Conditions of the Contract Documents for the Contractors indemnification obligations.

PART 37 - HAZARDOUS MATERIALS

37.1 The Contractor is hereby advised that it is possible that asbestos and/or other hazardous materials are or were present in this building(s). Any worker, occupant, visitor, inspector, etc., who encounters any material of whose content they are not certain shall promptly report the existence and location of that material to the Contractor and/or Owner. The Contractor shall, as a part of his work, insure that his workers are aware of this potential and what they are to do in the event of suspicion. He shall also keep uninformed persons from the premises during construction. Furthermore, the Contractor shall insure that no one comes near to or in contact with any such material or fumes therefrom until its content can be ascertained to be non-hazardous. Refer to the General Conditions and Special Conditions of the Contract Documents for detailed requirements related to any Hazardous Materials encountered.

37.2 CMTA, Inc., Consulting Engineers, have no expertise in the determination of the presence of hazardous materials. Therefore, no attempt has been made by them to identify the existence or location of any such material. Furthermore, CMTA nor any affiliate thereof will neither offer nor make any recommendations relative to the removal, handling or disposal of such material.

37.3 If the work interfaces, connects or relates in any way with or to existing components which contain or bear any hazardous material, asbestos being one, then, it shall be the Contractor's sole responsibility to contact the Construction Manager and so advise him immediately.

37.4 The Contractor by execution of the contract for any work and/or by the accomplishment of any work thereby agrees to bring no claim relative to hazardous materials for negligence, breach of contract, indemnity, or any other such item against CMTA, its principals, employees, agents or consultants. Refer to the General Conditions and Special Conditions of the Contract Documents for the Contractors indemnification obligations.

PART 38 – ABOVE-CEILING AND FINAL PUNCH LISTS

38.1 The Contractor shall review each area and pre-

pare a punch list for each of the subcontractors, as applicable, for at least two stages of the project.

38.1.1 For review of the above-ceiling work that will be concealed by tile or other materials well before substantial completion.

38.1.2 For review of all other work as the project nears substantial completion.

38.1.3 When all work from the Contractor's punch list is complete at each of these stages and prior to completing ceiling installations (or at the final punch list stage), the Contractor shall request that the Engineer develop a punch list. This request is to be made in writing seven days prior to the proposed date. After all corrections have been made from the Engineer's punch list, the Contractor shall review and initial off on each item. This signed-off punch list and all work prior to the ceilings being installed and at the final punch list review.

38.1.4 If additional visits are required by the Engineer to review work not completed by this review, the Engineer shall be reimbursed directly by the Contractor by check or money order (due net 10 days from date of each additional visit) at a rate of $125.00 per hour for extra trips required to complete either of the above-ceiling or final punch lists.

END OF SECTION 27 0501

SECTION 27 0610 – VOICE DATA NETWORK SYSTEM

1. GENERAL

a. RELATED DOCUMENTS

1) Drawings and general provisions of the Contract, including General, Special and Supplementary Conditions and Division 01 Specification Sections, apply to this Section.
2) All materials and installation shall comply with University construction standards. These standards are available at: http://www.uky.edu/cpmd/design-standards. Special attention shall be given to Divisions 02, 08, 26, 27 and 28. The Contractor shall familiarize himself with the published UK Communications and Network Systems design standards. In the event of a conflict between these standards and the Contract Documents the most stringent requirement shall be met.
3) The Contractor is directed to examine each and every section of these specifications, all drawings relating to the Contract Documents, any and all Addenda, etc., for work described elsewhere that may relate to the provision of the work described herein. Materials and performance requirements are specified elsewhere herein that relate to these systems.
4) All layout and installation of communications infrastructure shall be in accordance with ANSI / TIA 568 and the BICSI TDMM.
5) Each Contractor's attention is directed to Section 270501 - General Provisions, Communications, and all other Contract Documents as they apply to his work.

b. SUMMARY

1) Section Includes:
2) Pathways.
3) UTP cabling.
4) Fiber Optic Cabling
5) Cable connecting hardware, patch panels, and cross-connects.
6) Telecommunications outlet/connectors.
7) Cabling system identification products.
8) Cable management system.
9) The Contractor shall furnish all materials, labor, services, purchasing, testing of completely installed systems, etc., that are indicated or required to provide a complete telecommunications distribution network for the project.
10) The telecommunications distribution network shall be designed and installed in a format and construction as required for an IEEE 802.3an compliant 10Gb Ethernet system. It shall be physically wired in a star configuration.
11) The telecommunications distribution system shall be installed complete, except as hereinafter described. The system shall be provided with all wall plates, inserts, wiring, equipment racks and supports, copper and fiber termination equipment, connections, wire terminations and identifications, 120 VAC power outlets, grounding etc., for a completely functioning premises wiring network. Components of each subsystem shall be of one manufacture, and be tested and certified as compatible to provide the specified performance.
12) Horizontal copper systems shall be Tyco/Amp or pre-approved equal. Fiber systems shall be Corning or Pre-approved equal.
13) The system active electronic hardware and software shall be installed by the Owner or his vendor, unless otherwise noted or specified.
14) All work shall comply with the National Electrical Code, Kentucky Building Codes, and the University of Kentucky Communications and Network Systems Standards. The guidelines developed by ANSI/TIA/EIA and BICSI (Building Industry Service Consultants International) shall be followed in construction of Telecommunications rooms.
15) Per the drawings, a 4” deep inside depth cable tray will loop the entire perimeter inside all Telecommunications (MDF/IDF) rooms at no less than 8’ AFF. Maintain a 4” clearance from each wall. Universal 12” cable ladder will be installed at the top of the communications racks spanning the width of the room. Radius drop outs will be installed on all cable trays where cables exit the tray to a lower elevation.

16) Fire treated plywood, 3/4-inch thick, shall be mechanically fastened to all walls of each Telecommunications (MDF/IDF) room. The plywood shall be painted with two (2) coats of neutral color fire resistant paint. The fire treated plywood will begin at 4” AFF and end at 8’ 4” AFF. The room walls shall be finished with drywall (completely taped, sanded, and painted) or concrete block (painted) prior to mounting the plywood.

c. BACKBONE CABLING DESCRIPTION

1) Backbone cabling system shall provide interconnections between communications equipment rooms, main terminal space, and entrance facilities in the telecommunications cabling system structure. Cabling system consists of backbone cables, intermediate and main cross-connects, mechanical terminations, and patch cords or jumpers used for backbone-to-backbone cross-connection.
2) Backbone cabling cross-connects may be located in communications equipment rooms or at entrance facilities. Bridged taps and splitters shall not be used as part of backbone cabling.
3) Backbone cabling system shall comply with transmission standards in ANSI/TIA-568-C.Z, when tested according to test procedures of this standard.

d. HORIZONTAL CABLING DESCRIPTION

1) Horizontal cable and its connecting hardware provide the means of transporting signals between the telecommunications outlet/connector and the horizontal cross-connect located in the communications equipment room. This cabling and its connecting hardware are called "permanent link," a term that is used in the testing protocols. Splices shall not be installed in the horizontal cabling.
2) The maximum allowable horizontal cable length is 275 feet.
3) Horizontal cabling system shall comply with transmission standards in ANSI/TIA-568-C.1, when tested according to test procedures of this standard.

e. SUBMITTALS

1) Product Data: For each type of product indicated.
2) Submittals shall also be accompanied by a detailed bill of material, including part numbers and quantities.
3) Shop Drawings:
4) System Labeling Schedules: Electronic copy of labeling schedules, in software and format selected by Owner.
5) Cabling administration drawings and printouts.
6) Wiring diagrams to show typical wiring schematics including the following:

   (a) Cross-connects.
   (b) Patch panels.
   (c) Patch cords.

7) Cross-connects and patch panels. Detail mounting assemblies, and show elevations and physical relationship between the installed components.
8) Cable tray layout, showing cable tray route to scale, with relationship between the tray and adjacent structural, electrical, and mechanical elements. Include the following:

   (a) Vertical and horizontal offsets and transitions.
   (b) Clearances for access above and to side of cable trays.
   (c) Vertical elevation of cable trays above the floor or bottom of ceiling structure.
   (d) Load calculations to show dead and live loads as not exceeding manufacturer's rating for tray and its support elements.

9) Qualification Data: For Installer, qualified layout technician, installation supervisor, and field inspector.
10) Source quality-control reports.
11) Field quality-control reports.
12) Maintenance Data: For connectors to include in maintenance manuals.

f. QUALITY ASSURANCE

1) Installer Qualifications: Cabling Installer must have personnel certified by BICSI on staff.
2) Layout Responsibility: Preparation of Shop Drawings, Cabling Administration Drawings, and field testing program development by an RCDD on the permanent staff of installing Contractor.
3) Installation: Installation shall be under the direct supervision of a Level 2 Installer, who shall be present at all times when Work of this Section is performed at Project site. At least 50% of the Contractor's technicians on site shall be BICSI Certified Installers.
4) Testing Supervisor: Currently certified by BICSI as an RCDD to supervise on-site testing.
5) Installer shall be certified by the systems manufacturer as necessary to obtain the cabling system warranty as required by this specification.
6) Electrical Components, Devices, and Accessories: Listed and labeled as defined in NFPA 70, by a qualified testing agency, and marked for intended location and application.
7) Telecommunications Pathways and Spaces: Comply with NFPA 70, and TIA/EIA-569-C.

g. GROUNDING:

1) Comply with NFPA 70, and ANSI/TIA-607-C and UK Communications and Network Systems standards.

h. DELIVERY, STORAGE, AND HANDLING

1) Test cables upon receipt at Project site.
2) Test each pair of UTP cable for open and short circuits.

i. COORDINATION

1) Coordinate layout and installation of communications equipment with Owner's telecommunications and LAN equipment and service suppliers.
2) Meet jointly with telecommunications and LAN equipment suppliers, Engineer, and Owner to exchange information and agree on details of equipment arrangements and installation interfaces.
3) Record agreements reached in meetings and distribute them to other participants.
4) Adjust arrangements and locations of racks, sleeves, cross-connects, and patch panels in equipment rooms to accommodate and optimize arrangement and space requirements of telephone and LAN equipment.
5) Coordinate location of power raceways and receptacles with locations of communications equipment requiring electrical power to operate.

j. WARRANTIES

1) INSTALLATION WARRANTY. The Contractor shall warrant the cabling system unconditionally against defects in workmanship for a period of two (2) years from the date of system acceptance. The warranty shall cover all labor and materials necessary to correct a failed portion of the system and to demonstrate performance within the original installation specifications after repairs are accomplished. Replacement of faulty materials and the cost of labor to make the replacement shall be the responsibility of the Contractor.
2) Copper drops shall be warranted to results defined in the channel specifications of ANSI/TIA-568-C.2 Category 6A up to 500MHz.
3) The equipment items shall be supported by service organizations which are reasonably convenient (less than 100 miles from project site) to the equipment installation in order to render satisfactory service to the equipment on a regular and emergency basis during the warranty period of the contract.
4) The Warranty specified in this Article shall not deprive the Owner of other rights the Owner may have under provisions of the Contract Documents and shall be in addition to, and run concurrently with other warranties made by the Contractor under requirements of the Contract Documents.
5) The Contractor shall provide a system warranty covering the installed cabling system against defects in workmanship, components, and performance, and covering follow-on support after project completion.

2. PRODUCTS

a. MANUFACTURERS

1) Manufacturers: Subject to compliance with requirements, provide products by one of the following:

(a) Horizontal Cabling: Amp/TE Connectivity

2) Horizontal Termination Hardware: Amp/TE Connectivity

b. PATHWAYS

1) General Requirements: Comply with ANSI/TIA-569-C.
2) Cable Trays: Cable tray shall be aluminum ladder style, have the minimum dimensions of 12 inches wide and 4 inches interior depth or as noted on the Drawings. Rung spacing will be a maximum of 6” over the entire length of the cable tray. Special attention must be given to elevation changes and corners to provide cable support. Only factory corners, T’s and radii are to be used (i.e. sweeping factory 90's for all turns). Dropouts will be installed at all points where communications cables will exit the cable tray.
3) Conduit and Boxes: Comply with requirements in Division 26 Sections "Raceways and Fittings for Electrical Systems” and “Cabinets, Outlet Boxes, and Pull Boxes for Electrical Systems” except as noted below.
   (a) All outlet boxes for communications shall be no smaller than 5" x 5" x 2-7/8" deep with a single or double gang plaster ring and integral wire management. Outlet plaster rings shall be as required for faceplates.
   (b) Minimum conduit for communications outlet boxes shall be two (2) 1 1/4” conduits. Interior conduit shall be EMT or RGS. Exterior conduits shall be Schedule 40 PVC encased in 3” of concrete per detail.
4) A bonding jumper shall be used to ensure continuity to cable tray.
5) Provide all conduits with connector and insulated bushing at their termination point.

c. BACKBOARDS

1) Backboards: Plywood, fire-retardant treated, 3/4” x 96” inches tall. Comply with requirements for plywood backing panels specified in Division 06 Section “Rough Carpentry”.

d. EQUIPMENT FRAMES

1) Manufacturers: Ortronics
2) General Frame Requirements:
3) Distribution Frames: Freestanding and wall-mounting, modular-steel units designed for telecommunications terminal support and coordinated with dimensions of units to be supported.
4) Module Dimension: Width compatible with EIA 310 standard, 19-inch panel mounting.
5) Finish: Manufacturer's standard, baked-polyester powder coat.
6) Floor-Mounted Racks: Modular-type, steel construction.
7) Heavy duty aluminum 7’ tall, floor mount racks with cable management channels on both sides and mounting rails for 19” equipment.
8) Vertical and horizontal cable management channels, top and bottom cable troughs, grounding lug.
9) Baked-polyester powder coat finish.
10) Racks shall be Ortronics Mighty Mo 6 with 16.25” channel depth or equal.
11) Cable Management for Equipment Frames:
12) Metal, with integral wire retaining fingers.
13) Baked-polyester powder coat finish.
14) Vertical cable management panels shall have front and rear channels, with covers. Provide vertical management on both sides of all racks.
15) Provide horizontal crossover cable manager at the top of each relay rack and between/below all patch panels, with a minimum height of two rack units each.
16) Rack Mounted Hardware

17) Rack elevation drawings showing termination hardware placement are required for approval prior to installation. Optical fiber distribution shelves shall be installed in the top positions of the rack. For MDF/IDF rooms with multiple racks, blank panels will be installed in the top positions to reserve the equivalent of seven (7) rack mount spaces in all racks that do not require fiber closures. Patch panels will be installed with horizontal wire management panels above, below and in between each panel.

18) Wall Mounted Hardware
19) Wall mounted voice blocks shall be properly secured to the plywood backboard. Location of the blocks within the MDF/IDF rooms shall be approved by UKIT Design and Engineering. D rings shall be installed for wire management on the backboard. Standard 50 pair 66 blocks or 110 blocks shall be used for voice backbone cable terminations not requiring protection. Provide wall mounted protection blocks.

e. UTP HORIZONTAL CABLE

1) Description: 100-ohm, 4-pair Unshielded UTP, covered with a thermoplastic jacket.
2) Comply with ICEA S-90-661 for mechanical properties.
3) Comply with ANSI/TIA-568-C.1 for performance specifications.
4) Comply with ANSI/TIA-568-C.2 Category 6A up to 500 MHz.
5) Listed and labeled by an NRTL acceptable to authorities having jurisdiction as complying with UL 444 and NFPA 70 for the following types:

   (a) Communications, General Purpose: Type CM or CMG.
   (b) Communications, Riser Rated: Type CMR or CMP.

f. UTP HORIZONTAL CABLE HARDWARE

1) General Requirements for Cable Connecting Hardware: Comply with ANSI/EIA-568-C.2, IDC type, with modules designed for punch-down caps or tools. Cables shall be terminated with connecting hardware of same category or higher.
2) Connecting Blocks: Shielded modular jack to be compatible with cabling system. Provide blocks for the number of cables terminated on the block, plus 25 percent spare. Integral with connector bodies, including plugs and jacks where indicated.
3) Patch Panel: Modular panels housing 48 modular snap-in jack units.
4) Patch panels shall be angled style.
5) Number of Jacks per Field: One for each four-pair UTP cable indicated, plus spares and blank positions adequate to suit specified expansion criteria.
6) Jacks and Jack Assemblies: Modular, color-coded, eight-position modular receptacle units with integral IDC-type terminals.

g. TELECOMMUNICATIONS OUTLET/CONNECTORS

1) Jacks: Category 6A 100-ohm, unshielded balanced, twisted-pair connector; four-pair, eight-position modular. Comply with ANSI/TIA-568-C.2 up to 500 MHz.
2) Workstation Outlets: Connector assemblies mounted in one or two gang faceplate. Provide number of ports as shown on the Drawings.
3) Plastic Faceplate: High-impact plastic. Coordinate color with Division 26 Section "Wiring Devices and Plates."
4) For use with snap-in jacks accommodating any combination of UTP, optical fiber, and coaxial work area cords.

   (a) Flush mounting jacks, positioning the cord at a 45-degree angle.

5) Legend: Snap-in, clear-label covers and machine-printed paper inserts.

h. OPTICAL FIBER CABLE

1) Manufacturers: Subject to compliance with requirements, provide products by the following:

   (a) Corning Cable Systems

2) Description: Multimode, 50/125 micrometer, laser optimized, non-conductive, tight buffer inside plant optical fiber cable.

   (a) Comply with ICEA S-83-596 for mechanical properties.
   (b) Comply with TIA/EIA-568-C.3 for performance specifications.
   (c) Comply with ANSI/TIA-492AAAA-B for detailed specifications.
   (d) Listed and labeled by an NRTL acceptable to authorities having jurisdiction as complying with UL 444, UL 1651, and NFPA 70.
   (e) Provide with central non-conductive strength member.
   (f) Minimum Effective Modal Bandwidth: 2000 MHz-km at 850 nm.
   (g) Individual fiber strands shall be color coded per telecommunications industry practice.
   (h) Number of strands shall be as noted on Drawings
   (i) Fiber strands shall meet the following specifications:
      i) Fiber Type - Multi-mode, glass core, glass cladding.
      ii) Core Diameter - 50 microns +/- 3 microns.
      iii) Core/Clad Concentricity Error- < or = 3.0 microns.
      iv) Cladding diameter - 125 microns +/- 1 micron.
      v) Cladding Noncircularity- < or = 1%.
      vi) Maximum attenuation at 850 nanometers (nominal) 3.0 dB/km.
      vii) Maximum attenuation at 1300 nanometers (nominal) 1.0 dB/km.
      viii) ISO/IEC 11801 Type: OM3.
   (j)

3) Description: Multimode, 62.5/125 micrometer, non-conductive, loose tube, gel filled, outside plant optical fiber cable.

   (a) Comply with ICEA 87-640 for mechanical properties.
   (b) Comply with TIA/EIA-568-C.3 for performance specifications.
   (c) Comply with TIA/EIA-492AAAA-B for detailed specifications.
   (d) Listed and labeled by an NRTL acceptable to authorities having jurisdiction as complying with UL 444, UL 1651, and NFPA 70 for the following types:
   (e) Provide with central non-conductive strength member.
   (f) Minimum Effective Modal Bandwidth: 2000 MHz-km at 850 nm.
   (g) Individual fiber strands shall be color coded per telecommunications industry practice.
   (h) Number of strands shall be as noted on Drawings
   (i) Fiber strands shall meet the following specifications:
      i) Fiber Type - Multi-mode, glass core, glass cladding.
      ii) Core Diameter - 62.5 microns +/- 3 microns.
      iii) Core/Clad Concentricity Error- < or = 3.0 microns.
      iv) Cladding diameter - 125 microns +/- 1 micron.
      v) Cladding Noncircularity- < or = 1%.
      vi) Maximum attenuation at 850 nanometers (nominal) 3.5 dB/km.
      vii) Maximum attenuation at 1300 nanometers (nominal) 1.0 dB/km.
      viii) ISO/IEC 11801 Type: OM1.

4) Description: Single Mode, nonconductive, tight buffer, optical fiber cable.

   (a) Comply with ICEA S-83-596 for mechanical properties.
   (b) Comply with TIA/EIA-568-C.3 for performance specifications.
   (c) Comply with ANSI/TIA/EIA-492-CAAA for detailed specifications.
   (d) Listed and labeled by an NRTL acceptable to authorities having jurisdiction as complying with UL 444, UL 1651, and NFPA 70 for the following types:

i) Riser Rated, Nonconductive: Type OFNR or OFNP, complying with UL 1666.

(e) Provide with central non-conductive strength member.
(f) Individual fiber strands shall be color coded per telecommunications industry practice.
(g) Number of strands in cable shall be as noted on Drawings
(h) Fiber strands shall meet the following specifications:
i) Fiber Type - Single-mode, glass core, glass cladding
ii) Core Diameter - 8.0 to 9.0 microns
iii) Core/Clad Concentricity Error- < or = 0.8 micron
iv) Cladding diameter - 125 microns +/- 1 micron.
v) Cladding Noncircularity- < or = 1%
vi) Maximum attenuation at 1310 nanometers (nominal) 0.65 dB/km.
vii) Maximum attenuation at 1550 nanometers (nominal) 0.5 dB/km.
viii) ISO/IEC 11801 Type: OS2
(i)

5) Jacket:

(a) Jacket Color:
i) single mode-yellow
ii) OM1-orange
iii) OM3-aqua
iv) OSP-black

6)
(a) Cable cordage jacket, fiber, unit, and group color shall be according to ANSI/TIA-598-C.
(b) Imprinted with fiber count, fiber type, and aggregate length at regular intervals not to exceed 40 inches.
(c) Hybrid single mode/multimode cable may be used subject to performance criteria above.

i. OPTICAL FIBER CABLE HARDWARE

1) Cross-Connects and Patch Panels: Modular panels housing multiple-numbered, duplex cable connectors.

(a) Number of Connectors per Field: One for each fiber of cable or cables assigned to field, plus spares and blank positions adequate to suit specified expansion criteria.

2) Patch Cords: Provide factory-made, dual-fiber cables in 36-inch (900-mm) lengths, quantity to match quantity of fibers.

3) Cable Connecting Hardware:

(a) Comply with Optical Fiber Connector Intermateability Standards (FOCIS) specifications of TIA/EIA-604-2, TIA/EIA-604-3-A, and TIA/EIA-604-12. Comply with ANSI/TIA-568-C.3.
(b) Quick-connect, simplex and duplex, Type SC.

j. GROUNDING

1) Comply with requirements in Division 26 Section "Grounding and Bonding" for grounding conductors and connectors.
2) Comply with ANSI -607-C.
3) Communications Ground bar.
4) Connectors: Mechanical type, cast silicon bronze, solderless compression-type wire terminals, and long-barrel, two-bolt connection to ground bus bar.

5) Ground Bus Bar: Copper, minimum 1/4 inch thick by 4 inches wide with 9/32-inch holes spaced 1-1/8 inches apart.
6) Stand-Off Insulators: Comply with UL 891 for use in switchboards, 600V. Lexan or PVC, impulse tested at 5000 V.

k. LABELING

1) Comply with TIA/EIA-606-B, UL 969 and UKIT requirements for a system of labeling materials, including label stocks, laminating adhesives, and inks used by label printers.

3. EXECUTION

a. WIRING METHODS

1) Wiring Method: Install cables completely within raceways and cable trays. Conceal raceway except in unfinished spaces.
2) Complete with requirements for raceways and boxes specified in Division 26 Sections "Raceway and Fittings for Electrical Systems" and "Cabinets, Outlet Boxes, and Pull Boxes for Electrical Systems".
3) Wiring within Enclosures: Bundle, lace, and train cables within enclosures. Connect to terminal points with no excess and without exceeding manufacturer's limitations on bending radii. Provide and use lacing bars and distribution spools.

b. INSTALLATION OF PATHWAYS

1) Cable Trays: Comply with NEMA VE 2 and ANSI/TIA-569-C.
2) Complete with requirements for cable trays specified in Division 27 Section "Cable Trays for Communication Systems".
3) Comply with ANSI/TIA-569-C for pull-box sizing and length of conduit and number of bends between pull points.
4) Install manufactured conduit sweeps and long-radius elbows whenever possible.
5) All cable tray is to be mounted using a trapeze method with allthread rods and unistrut. Fasten allthread to ceiling anchors, allowing no bends in allthread. Support the cable tray in this manner at every section-to-section junction and at five (5) foot to six (6) foot intervals (mid span) between joints. In no case shall the tray be closer than eighteen (18) inches from the structural ceiling, ducts or pipes, considering all other possible obstructions. A minimum of two (2) feet distance from lighting, especially fluorescent lighting, is required. Supports for cable tray that is less than 12 inches wide may be farther apart but must meet or exceed the manufacturer's installation requirements. A single support per section length is not acceptable.
6) Maintain a 12" clearance above the cable tray in reference to other utilities in the building. maintain a minimum of 24" along one the side of the tray to allow access from below the tray. Cable trays must be a minimum of six (6) inches above the ceiling and a minimum of eight (8) feet AFF. Cable trays will be the first utility above the ceiling.
7) Where cable trays penetrate walls provide for smooth sealed edges on all four sides of wall. This is necessary to properly firestop all edges.
8) Pathway Installation in Communications Equipment Rooms:

   (a) Position conduit ends adjacent to a corner on backboard where a single piece of plywood is installed, or in the corner of room where multiple sheets of plywood are installed around perimeter walls of room.
   (b) Install cable trays complete around room as shown on drawings. Install cable ladder directly on top of racks and connect to perimeter tray. Refer to drawings for elevation.
   (c) Secure conduits to backboard when entering room from overhead.
   (d) Extend conduit and sleeves 4 inches above finished floor and/or 18" below ceiling structure.
   (e) Install metal conduit and sleeves with grounding bushings and connect with grounding conductor to grounding bar.
   (f) Backboards: Install backboards with 96-inch dimension vertical. Butt adjacent sheets tightly, and form smooth gap-free corners and joints. Provide on all walls.

c. INSTALLATION OF CABLES

1) Comply with NECA 1.
2) General Requirements for Cabling:

(a) Comply with ANSI/TIA-568-C.1.
(b) Comply with BICSI ITSIM, Ch. 6, "Cable Termination Practices."
(c) Install 110-style IDC termination hardware for backbone cable and modular jacks for horizontal cable.
(d) Terminate all conductors; no cable shall contain unterminated elements. Make terminations only at indicated outlets, terminals, cross-connects, and patch panels.
(e) Cables may not be spliced.
(f) Install lacing bars to restrain cables, to prevent straining connections, and to prevent bending cables to smaller radii than minimums recommended by manufacturer.
(g) Bundle, lace, and train conductors to terminal points without exceeding manufacturer's limitations on bending radii, but not less than radii specified in BICSI ITSIM, "Cabling Termination Practices" Chapter. Use lacing bars and distribution spools.
(h) Do not install bruised, kinked, scored, deformed, or abraded cable. Do not splice cable between termination, tap, or junction points. Remove and discard cable if damaged during installation and replace it with new cable.
(i) Cold-Weather Installation: Bring cable to room temperature before de-reeling. Heat lamps shall not be used for heating.
(j) In the communications equipment room, install a 30-foot long service loop on each end of fiber optic cable. Copper cables shall take the longest path around the room prior to landing on racks.
(k) Pulling Cable: Comply with BICSI ITSIM, Ch. 4, "Pulling Cable." Monitor cable pull tensions.

3) UTP Cable Installation:

(a) Comply with ANSI/TIA-568-C.2.
(b) Do not untwist UTP cables more than 1/2 inch from the point of termination to maintain cable geometry.
(c) Group connecting hardware for cables into separate logical fields.

d. SEPARATION FROM EMI SOURCES

1) Comply with BICSI TDMM and ANSI/TIA-598-C recommendations for separating unshielded copper voice and data communication cable from potential EMI sources, including electrical power lines and equipment.
2) Separation between open communications cables or cables in nonmetallic raceways and unshielded power conductors and electrical equipment shall be as follows:

(a) Electrical Equipment Rating Less Than 2 kVA: A minimum of 5 inches.
(b) Electrical Equipment Rating between 2 and 5 kVA: A minimum of 12 inches.
(c) Electrical Equipment Rating More Than 5 kVA: A minimum of 24 inches.

3) Separation between communications cables in grounded metallic raceways and unshielded power lines or electrical equipment shall be as follows:

(a) Electrical Equipment Rating Less Than 2 kVA: A minimum of 2-1/2 inches.
(b) Electrical Equipment Rating between 2 and 5 kVA: A minimum of 6 inches.
(c) Electrical Equipment Rating More Than 5 kVA: A minimum of 12 inches.

4) Separation between communications cables in grounded metallic raceways and power lines and electrical equipment located in grounded metallic conduits or enclosures shall be as follows:

(a) Electrical Equipment Rating Less Than 2 kVA: No requirement.
(b) Electrical Equipment Rating between 2 and 5 kVA: A minimum of 3 inches.
(c) Electrical Equipment Rating More Than 5 kVA: A minimum of 6 inches.

5) Separation between Communications Cables and Electrical Motors and Transformers, HP and Larger: A minimum of 48 inches.

6) Separation between Communications Cables and Fluorescent Fixtures: A minimum of 12 inches.
7) A pull string shall be installed in all conduits, including those with cables installed. String shall be securely tied off at both ends.

e. FIRESTOPPING

1) Comply with requirements in Division 07 Section "Penetration Firestopping."
2) Comply with ANSI/TIA-569-C, Annex A, "Firestopping."
3) Comply with BICSI TDMM, "Firestopping Systems" Article.

f. GROUNDING

1) Install grounding according to BICSI TDMM, "Grounding, Bonding, and Electrical Protection" Chapter and Division 27 section "Grounding and Bonding for Communication Systems". Refer to the drawings for interconnections and cable sizes.
2) Comply with ANSI-607-C.
3) Bond metallic equipment to the grounding bus bar, using not smaller than #6 AWG equipment grounding conductor.
4) Bond the shield of shielded cable to the grounding bus bar in communications rooms and spaces.

g. IDENTIFICATION

1) Identify system components, wiring, and cabling complying with ANSI/TIA-606-B. The identification scheme shall be provided by the owner prior to any labeling or testing.
2) Comply with requirements in Division 09 Section "Interior Painting" for painting backboards. For fire-resistant plywood, do not paint over manufacturer's label.
3) Cable Schedule: Post in prominent location in each equipment room and wiring closet. List incoming and outgoing cables and their designations, origins, and destinations. Protect with rigid frame and clear plastic cover. Furnish an electronic copy of final comprehensive schedules for Project.
4) Cabling Administration Drawings: Show building floor plans with cabling administration-point labeling. Identify labeling convention and show labels for telecommunications closets, backbone pathways and cables, entrance pathways and cables, terminal hardware and positions, horizontal cables, work areas and workstation terminal positions, grounding buses and pathways, and equipment grounding conductors. Follow convention of ANSI/TIA-606-B. Furnish electronic record of all drawings, in software and format selected by Owner.
5) Cable and Wire Identification:
6) Label each cable within 4 inches of each termination and tap, where it is accessible in a cabinet or junction or outlet box, and elsewhere as indicated.
7) Label each terminal strip and screw terminal in each cabinet, rack, or panel.

   (a) Individually number wiring conductors connected to terminal strips, and identify each cable or wiring group being extended from a panel or cabinet to a building-mounted device shall be identified with name and number of particular device as shown.
   (b) Label each unit and field within distribution racks and frames.

8) Identification within Connector Fields in Equipment Rooms and Wiring Closets: Label each connector and each discrete unit of cable-terminating and connecting hardware. Where similar jacks and plugs are used for both voice and data communication cabling, use a different color for jacks and plugs of each service.
9) Both ends of all backbone cable shall be labeled. Labels will be self laminating and machine generated. The label shall contain the following information:

   (a) The Origination (TR it is feeding from).
   (b) The Destination (TR it is feeding).
   (c) Number of pairs or fibers

10) Both ends of all horizontal cables shall be labeled. Labels shall be self-laminating and machine generated. The cable, workstation faceplate, panel ports and block positions shall be labeled with the room number, location in room, outlet type & # (data D1, D2, etc). In rooms with multiple outlets, label clockwise as you enter the room: 1, 2, 3 e.g. a data port at the first drop location to

the left of Room 216 door would be (216-1 D1). When terminating workstation cables in the TR, organize and label the cables in numeric room number order at the patch panel.

11) UKIT will approve all labeling schematics prior to installation. "As-Built" drawing with all outlets identified shall be provided.

h. Labels shall be self-laminating or computer-printed type with printing area and font color that contrasts with cable jacket color. Handwritten labels will not be acceptable.

1) Cables use flexible vinyl or polyester that flex as cables are bent.

i. FIELD QUALITY CONTROL

1) Perform tests and inspections.
2) Tests and Inspections:
3) Visually inspect UTP and optical fiber cable jacket materials for NRTL certification markings. Inspect cabling terminations in communications equipment rooms for compliance with color-coding for pin assignments, and inspect cabling connections for compliance with ANSI/TIA-568-C.1.
4) Visually confirm Category marking of outlets, cover plates, outlet/connectors, and patch panels.
5) Visually inspect cable placement, cable termination, grounding and bonding, equipment and patch cords, and labeling of all components.
6) Test UTP backbone copper cabling for DC loop resistance, shorts, opens, intermittent faults, and polarity between conductors. Test operation of shorting bars in connection blocks. Test cables after termination but not cross-connection.

(a) Test instruments shall meet or exceed applicable requirements in ANSI/TIA-568-C.2. Perform tests with a tester that complies with performance requirements in "Test Instruments (Normative)" Annex, complying with measurement accuracy specified in "Measurement Accuracy (Informative)" Annex. Use only test cords and adapters that are qualified by test equipment manufacturer for channel or link test configuration.

7) Optical Fiber Cable Tests:

i) Test instruments shall meet or exceed applicable requirements in ANSI/TIA-568-C.1. Use only test cords and adapters that are qualified by test equipment manufacturer for channel or link test configuration.

ii) Link End-to-End Attenuation Tests:

a) All multimode fiber cables shall be tested at both 850 nm and 1300 nm after installation. Printed test results for each fiber strand are required. All tests are to be performed in accordance with ANSI/TIA/EIA-526-7, Method A.1, One Reference Jumper. Fibers will be considered acceptable if the OTDR trace for that fiber shows an end to end loss of less than xxdB + yy(0.2)dB + zz(0.5)dB (where yy is the number of splices, zz is the number of connector pairs and xx is calculated using the following formula: xx = distance X fiber attenuation/unit distance @ lambda). In addition, no splice may show a loss of greater than 0.2 dB and no connector pairs may show a loss of greater than 0.5 dB. Any additional tests required by the ANSI/TIA/EIA standard shall also be performed and also included in the written test report.

b) The vendor shall perform tier 2 testing on each fiber strand utilizing a OTDR bi-directional tester at the wavelengths specified above. Overall, the OTDR test results shall be made up of the wavelength of the conducted test, the link length, attenuation, cable identification, the locations of the near end, the far end and each splice point or points of discontinuity. Hard-copy and electronic copy results for each fiber strand shall be submitted as part of "As- Built" documentation.

8) UTP Performance Tests:

(a) Test for each outlet. Perform the following tests according to ANSI/TIA-568-C.1 and ANSI/TIA-568-C.2:

a) Wire map.
b) Length (physical vs. electrical, and length requirements).
c) Insertion loss.
d) Near-end crosstalk (NEXT) loss.
e) Power sum near-end crosstalk (PSNEXT) loss.
f) Equal-level far-end crosstalk (ELFEXT).
g) Power sum equal-level far-end crosstalk (PSELFEXT).
h) Return loss.
i) Propagation delay.
j) Delay skew.

(b) Final Verification Tests: Perform verification tests for UTP, systems after the complete communications cabling and workstation outlet/connectors are installed.

a) Data Tests: These tests assume the Information Technology Staff has a network installed and is available to assist with testing. Connect to the network interface device at the demarcation point. Log onto the network to ensure proper connection to the network.

9) Document data for each measurement. Data for submittals shall be printed in a summary report that is formatted similar to Table 10.1 in BICSI TDMM, or transferred from the instrument to the computer, saved as text files, and printed and submitted.
10) If the cable or termination fails to meet the above requirements, it shall be replaced by the contractor at the contractor's expense.
11) Prepare test and inspection reports documenting compliance with all requirements of these specifications. Provide three (3) printed copies and two (2) compact disks of all data.

4. PARTS LISTINGS

a. Approved Manufacturers and Parts List

1) Horizontal Cabling
2) F/UTP 4/24 Category 6A PVC Cable (Green) Amp 4-1499389-2
3) Horizontal Termination Hardware
4) 6 Port Faceplate Amp 557691-X
5) 4 Port Faceplate Amp 558088-X
6) 2 Port Faceplate Amp 557505-X
7) Cat 6 Modular Outlet Amp 1375055-X
8) Cat 6A XG Shielded Modular Jack Amp 1711342-2
9) Blank Inserts Amp 406339-X
10) Green Data Icons Amp 558198-3
11) Modular Furniture Faceplate (confirm opening size with furniture supplier)
12) Back Box for Data Outlet 5" x 5"x 2-7/8" Randl
13) Back Box for Cat 6A Outlets 5" x 5" x 2-7/8" Randl
14) 48 Port Cat 6A XG Angled Patch Panel Amp 1933322-2
15) Horizontal Cable Mngmnt Panels 1 RMS Panduit CMPH1
16) 7" Blank Panel Kit Amp 556965-4
17) 300 pr 110 Block Kit w/ legs Amp 569446-1
18) 100 pr 110 Block Kit w/legs Amp 569440-1
19) Rack Mount 100 Pr 110 Block Amp 558635-1

X = coordinate color of faceplates, modular outlets, and blanks (all same color) with the end user and electrical faceplates (if not stainless steel).

20) Copper Backbone Cabling
21) 300 pr UTP Riser Cable General Cable 2133373
22) 200 pr UTP Riser Cable General Cable 2133323

23) 100 pr UTP Riser Cable General Cable 2133144
24) 25 pr UTP Riser Cable General Cable 2133033
25) 900 pr OSP Armored 24 AWG General Cable 7525876
26) 600 pr OSP Armored 24 AWG General Cable 7525868
27) 300 pr OSP Armored 24 AWG General Cable 7525843
28) 25 pr OSP Armored 24 AWG General Cable 7525785
29) Telecommunications Room Racks
30) 7' floor rack Ortronics Mighty Mo
31) 12” Universal Cable Tray Zero PFT LR1012J
32) Cable Tray
33) 4” deep Cable Tray (6” rung spacing) Monosystems
34) Horizontal Elbows, Vertical Risers, Ts,
35) Radius Drop Out
36) Connection components

END OF SECTION 27 0610

SECTION 28 0501 – GENERAL – SAFETY - SECURITY

PART 1 - GENERAL

1.1 The Instructions to Bidders, General and Special Conditions, and all other contract documents shall apply to the Contractor's work as well as to each of his Sub Contractor's work. Each Contractor is directed to familiarize himself in detail with all documents pertinent to this Contract. In case of conflict between these General Provisions and the General and/or Special Conditions, the affected Contractor shall contact the Engineer for clarification and final determination.

1.2 Each Contractor shall be governed by any alternates, unit prices and Addenda or other contract documents insofar as they may affect his part of the work.

1.3 All materials and installation shall comply with University construction standards. These standards are available at: http://www.uky.edu/cpmd/design-standards. Special attention shall be given to Divisions 02, 08, 26, 27 and 28. The Contractor shall familiarize himself with the published standards. In the event of a conflict between these standards and the Contract Documents the most stringent requirement shall be met.

1.4 The work included in this division consists of the furnishing of all labor, equipment, transportation, supplies, material and appurtenances and performing all operations necessary for the satisfactory installation of complete and operating Electrical Systems indicated on the drawings and/or specified herein.

1.5 Any materials, labor, equipment or services not mentioned specifically herein which may be necessary to complete or perfect any part of the Electrical Systems in a substantial manner, in compliance with the requirements stated, implied, or intended in the drawings and specifications, shall be included as part of this Contract. The Contractor shall give written notice of any materials or apparatus believed inadequate or unsuitable; in violation of laws, ordinances, rules or regulations of authorities having jurisdiction; and any necessary items of work omitted a minimum of ten days prior to bid. In the absence of such written notice and by the act of submitting his bid, it shall be understood that the Contractor has included the cost of all required items in his bid, and that he will be responsible for the approved satisfactory functioning of the entire system without extra compensations.

1.6 It is not the intent of this section of the specifications (or the remainder of the contract documents) to make any specific Contractor, other than the Contractor holding the prime contract, responsible to the Owner, Architect and Engineer. All transactions such as submittal of shop drawings, claims for extra costs, requests for equipment or materials substitution, shall be done through the Contractor to the Architect (if applicable), then to the Engineer.

1.7 This section of the Specifications or the arrangement of the contract documents shall not be construed as an attempt to arbitrarily assign responsibility for work, material, equipment or services to a particular trade Contractor or Sub-Contractor. Unless stated otherwise, the subdivision and assignment of work under the various sections shall be the responsibility of the Contractor holding the prime contract.

1.8 It is the intent of this Contract to deliver to the Owners a "like new" project once work is complete. Although plans and specifications are complete to the extent possible, it shall be responsibility of the Contractors involved to remove and/or relocate or re-attach any existing or new systems which interfere with new equipment or materials to be installed by other trades without additional cost to the Owner.

1.9 In general, and to the extent possible, all work shall be accomplished without interruption of the

existing facilities' operations. Each Contractor shall advise the Architect, Owner and Engineer in writing at least one week prior to the deliberate interruption of any services. The Owners shall be advised of the exact time that interruption will occur and the length of time the interruption will occur. Failure to comply with this requirement may result in complete work stoppage by the Contractors involved until a complete schedule of interruptions can be developed. Contractor will not be entitled to additional compensation due to work stoppage mandated by unscheduled interruption.

1.10 Whenever utilities are interrupted, either deliberately or accidentally, the Contractor shall work continuously to restore said service. The Contractor shall provide tools, materials, skilled journeymen of his own and other trades as necessary, premium time as needed and coordination with all applicable utilities, including payment of utility company charges (if any), all without requests for extra compensation to the Owner, except where otherwise provided for in the contract for the work. The contractor shall abide by the requirements on the Special Conditions and the University's outage request program.

1.11 Definitions:

1.11.1 Prime Contractor - The Contractor who has been engaged by the Owner in a contractual relationship to accomplish the work.

1.11.2 Electrical Contractor - Any Contractor whether bidding or working independently or under the supervision of a General Contractor, that is: the one holding the Prime Contract and who installs any type of Electrical work, such as: power, lighting, television, telecommunications, data, fiber optic, intercom, fire detection and alarm, security, video, underground or overhead electrical, etc.

1.11.3 Electrical Sub-Contractor - Each or any Contractor contracted to, or employed by, the Electrical Contractor for any work required by the Electrical Contractor.

1.11.4 Specialty Contractor - Any Contractor whether bidding or working independently or under the supervision of a General Contractor, that is: the one holding the Prime Contract and who installs any type of Electrical work, such as: fire detection and alarm, security, etc.

1.11.5 Engineer - The Consulting Mechanical-Electrical Engineers either consulting to the Owner, Architect, other Engineers, etc.

1.11.6 Architect - The Architect of Record for the project, if any.

1.11.7 Furnish - Deliver to the site in good condition.

1.11.8 Provide - Furnish and install in complete working order.

1.11.9 Install - Install equipment furnished by others in complete working order.

1.11.10 Contract Documents - All documents pertinent to the quality and quantity of all work to be performed on the project. Includes, but not limited to: Plans, Specifications, Addenda, Instructions to Bidders, (both General and Sub-Contractors), Unit Prices, Shop Drawings, Field Orders, Change Orders, Cost Breakdowns, Construction Manager's Assignments, Architect's Supplemental Instructions, Periodical Payment Requests, etc.

1.12 Note: Any reference within these specifications to a specific entity, i.e., "Electrical Contractor" is not to be construed as an attempt to limit or define the scope of work for that entity or assign work to a specific trade or contracting entity. Such assignments of responsibility are the responsibility of the Contractor or Construction Manager holding the prime contract, unless otherwise provided

herein.

PART 2 - INTENT

2.1 It is the intent of these specifications and all associated drawings that the Contractor provide finished work, tested, and ready for operation. Wherever the word "provide" is used, it shall mean "furnish and install complete and ready for use."

2.2 Minor details not usually shown or specified, but necessary for the proper installation and operation, shall be included in the work, the same as if herein specified or shown.

PART 3 - DRAWINGS AND SPECIFICATIONS

3.1 The drawings are diagrammatic only and indicate the general arrangement of the systems and are to be followed insofar as possible. If deviations from the layouts are necessitated by field conditions, detailed layouts of the proposed departures shall be submitted in writing to the Engineer for approval before proceeding with the work. The Contract Drawings are not intended to show every vertical or horizontal offset which may be necessary to complete the systems. Contractors shall, however, anticipate that additional offsets may be required and submit their bid accordingly.

3.2 The drawings and specifications are intended to supplement each other. No Contractor or supplier shall take advantage of conflict between them, or between parts of either, but should this condition exist, the Contractor or supplier shall request a clarification of the condition at least ten days prior to the submission of bids so that the condition may be clarified by Addendum. In the event that such a condition arises after work is started, the interpretation of the Engineer shall be the determining factor. In all instances, unless modified in writing and agreed upon by all parties thereto, the Contract to accomplish the work shall be binding on the affected Contractor.

3.3 The drawings and specifications shall be considered to be cooperative and complimentary and anything appearing in the specifications which may not be indicated on the drawings or conversely, shall be considered as part of the Contract and must be executed the same as though indicated by both.

3.4 This Contractor shall make all his own measurements in the field and shall be responsible for correct fitting. He shall coordinate this work with all other branches of work in such a manner as to cause a minimum of conflict or delay.

3.5 The Engineer shall reserve the right to make minor adjustments in location of conduit, fixtures, outlets, switches, etc., where he considers such adjustments desirable in the interest of concealing work or presenting a better appearance.

3.6 Each Contractor shall evaluate ceiling heights called for on Architectural Plans. Where the location of Electrical equipment may interfere with ceiling heights, the Contractor shall call this to the attention of the Engineer in writing prior to making the installation. Any such changes shall be anticipated and requested sufficiently in advance so as to not cause extra work on the part of the Contractor or unduly delay the work.

3.7 Should overlap of work between the various trades become evident, this shall be called to the attention of the Engineer. In such event neither trade shall assume that he is to be relieved of the work which is specified under his branch until instructions in writing are received from the Engineer.

3.8 The drawings are intended to show the approximate location of equipment, materials, etc. Di-

mensions given in figures on the drawings shall take precedence over scaled dimensions and all dimensions whether given in figures or scaled shall be verified in the field. In case of conflict between small and large scale drawings, the larger scale drawings shall take precedence.

3.9 The Specialty Contractor and his Sub Contractors shall review all drawings in detail as they may relate to his work (structural, architectural, site survey, mechanical, electrical, etc.). Review all drawings for general coordination of work, responsibilities, ceiling clearances, wall penetration points, chase access, elevations, etc. Make any pertinent coordination or apparent conflict comments to the Engineers at least ten days prior to bids, for issuance of clarification by written addendum.

3.10 Where on any of the drawings a portion of the work is drawn out and the remainder is indicated in outline, or not indicated at all, the parts drawn out shall apply to all other like portions of the work. Where ornament or other detail is indicated by starting only, such detail shall be continued throughout the courses or parts in which it occurs and shall also apply to all other similar parts of the work, unless otherwise indicated.

PART 4 - EXAMINATION OF SITE AND CONDITIONS

4.1 Each Contractor shall inform himself of all of the conditions under which the work is to be performed, the site of the work, the structure of the ground, the obstacles that may be encountered, the availability and location of necessary facilities and all relevant matters concerning the work. All Contractors shall carefully examine all Drawings and Specifications and inform themselves of the kind and type of materials to be used throughout the project and which may, in any way, affect the execution of his work.

4.2 Each Contractor shall fully acquaint himself with all existing conditions as to ingress and egress, distance of haul from supply points, routes for transportation of materials, facilities and services, availability of temporary or permanent utilities, etc. The Contractor shall include in his work all expenses or disbursements in connection with such matters and conditions. Each Contractor shall verify all work shown on the drawings and conditions at the site, and shall report in writing to the Engineer ten days prior to bid, any apparent omissions or discrepancies in order that clarifications may be issued by written addendum. No allowance is to be made for lack of knowledge concerning such conditions after bids are accepted.

4.3 The Specialty Contractor is required to provide coordination drawings, data and collaboration for all aspects of his work in accordance with the general and special conditions – Divisions 20, 22, 23, 26, and 28, and the Construction Manager’s procedures.

PART 5 - EQUIPMENT AND MATERIALS SUBSTITUTIONS OR DEVIATIONS

5.1 When any Contractor requests review of substitute materials and/or equipment, and when under an approved formal alternate proposal, it shall be understood and agreed that such substitution, if approved, will be made without additional cost regardless of changes in connections, spacing, service, mounting, etc. In all cases where substitutions affect other trades, the Contractor offering such substitutions shall advise all such Contractors of the change and shall reimburse them for all necessary changes in their work. Any drawings, Specifications, Diagrams, etc., required to describe and coordinate such substitutions or deviations shall be professionally prepared at the responsible Contractor's expense. Special Note: Review of Shop Drawings by the Engineer does not absolve the Contractor of this responsibility.

5.2 References in the specifications to any article, device, product, material, fixture, form, or type of construction by name, make, or catalog number shall be interpreted as establishing a standard of quality and shall not be construed as limiting competition. Each Contractor, in such cases, may,

at his option, use any article, device, product, material, fixture, form, or type of construction which in the judgment of the Engineer is equivalent to that specified, provided the provisions of paragraph (A) immediately preceding are met. Substitutions shall be submitted to the Engineer a minimum of ten days prior to bid date for approval to bid in written form thru addenda or other method selected by the Engineer. If prevailing laws of cities, towns, states or countries are more stringent than these specifications regarding such substitutions, then those laws shall prevail over these requirements.

5.3 Wherever any equipment and material is specified exclusively only such items shall be used unless substitution is accepted in writing by the engineers.

5.4 Each Contractor shall furnish along with his proposal a list of specified equipment and materials which he proposes to provide. Where several makes are mentioned in the Specifications and the Contractor fails to state which he proposes to furnish, the Engineer shall have the right to choose any of the makes mentioned without change in price.

PART 6 - SUPERVISION OF WORK

6.1 Each Contractor and Sub-Contractors shall personally supervise the work or have a competent superintendent on the project site at all times during progress of the work, with full authority to act for him in matters related to the project.

PART 7 - CODES, RULES, PERMITS, FEES, REGULATIONS, ETC.

7.1 The Contractor shall give all necessary notices, obtain and pay for all permits, government sales taxes, fees, and other costs including utility connections or extensions, in connection with his work. As necessary, he shall file all required plans, utility easement requests and drawings, survey information on line locations, load calculations, etc., prepare all documents and obtain all necessary approvals of all utility and governmental departments having jurisdiction; obtain all required certificates of inspection for his work and deliver same to the Engineer before request for acceptance and final payment for the work.

7.2 Ignorance of Codes, Rules, regulations, utility company requirements, laws, etc., shall not diminish or absolve Contractor's responsibilities to provide and complete all work in compliance with such.

7.3 The Contractor shall include in the work, without extra cost, any labor, materials, services, apparatus or drawings required in order to comply with all applicable laws, ordinances rules and regulations, whether or not shown on drawings and/or specified.

7.4 All materials furnished and all work installed shall comply with the current edition of the National Electrical Codes, National Fire Codes of the National Fire Protection Association, the requirements of local utility companies, and with the requirements of all governmental agencies or departments having jurisdiction.

7.5 All material and equipment for the electrical safety and security systems shall bear the approval label, or shall be listed by the Underwriters' Laboratories, Incorporated. Listings by other testing agencies may be acceptable with written approval by the Engineer.

7.6 All work is to be constructed and installed in accordance with plans and specifications which have been approved in their entirety and/or reflect any changes requested by the University Fire Marshal, as applicable or required. Electrical work shall not commence until such plans are in the hands of the Electrical Contractor.

7.7 The Contractor shall insure that his work is accomplished in accord with OSHA Standards and any other applicable government requirements.

7.8 Where conflict arises between any code and the plans and/or specifications, the code shall apply except in the instance where the plans and specifications exceed the requirements of the code. Any changes required as a result of these conflicts shall be brought to the attention of the Engineer at least ten working days prior to bid date, otherwise the Contractor shall make the required changes at his own expense. The provisions of the codes constitute minimum standards for wiring methods, materials, equipment and construction and compliance therewith will be required for all electrical work, except where the drawings and specifications require better materials, equipment, and construction than these minimum standards, in which case the drawings and specifications shall be the minimum standards.

PART 8 - COST BREAKDOWNS

8.1 Within thirty days after acceptance of the Contract, each Contractor is required to furnish to the Engineer one copy of a detailed cost breakdown on each respective area of work. These cost breakdowns shall be made on forms provided or approved by the Engineer or Architect. Payments will not be made until satisfactory cost breakdowns are submitted.

PART 9 - GUARANTEES AND WARRANTIES

9.1 Each Contractor shall unconditionally guarantee all equipment, apparatus, materials, and workmanship entering into this Contract to be the best of its respective kind and shall replace all parts at his own expense, which fail or are deemed defective within one year from final acceptance of the work by the Engineer. The effective date of completion of the work shall be the date each or any portion of the work is accepted by the Engineer as being substantially complete.

9.2 Items of equipment which have longer guarantees, as called for in these specifications or as otherwise offered by the manufacturer, such as generators, engines, batteries, transformers, etc., shall have warranties and guarantees completed in order, and shall be in effect at the time of final acceptance of the work by the Engineer. The Contractor shall present the Engineer with such warranties and guarantees at the time of final acceptance of the work. The Owner reserves the right to use equipment installed by the Contractor prior to date of final acceptance. Such use of equipment shall in no way invalidate the guarantee except that Owner shall be liable for any damage to equipment during this period due to negligence of his operator or other employee.

PART 10 - INSPECTION, APPROVALS AND TESTS

10.1 Before requesting a final review of the installation from the Architect and/or Engineer, the Contractor shall thoroughly inspect his installation to assure that the work is complete in every detail and that all requirements of the Contract Documents have been fulfilled. Failure to accomplish this may result in charges from the Architect and/or Engineers for unnecessary and undue work on their part.

10.2 The Contractor shall provide as a part of this contract electrical inspection by a competent Electrical Inspection Agency, licensed to provide such services. The name of this agency shall be included in the list of materials of the Form of Proposal by the Contractor. All costs incidental to the provision of electrical inspections shall be borne by the Electrical Contractor.

10.3 The Contractor shall advise each Inspection Agency in writing (with an information copy of the correspondence to the Architect and/or Engineer) when he anticipates commencing work. Failure of the Inspection Agency to inspect the work in the stage following and submit the related reports may result in the Contractor's having to expose concealed work not so inspected. Such exposure

will be at the expense of the responsible Contractor.

10.4 Inspections shall be scheduled for rough as well as finished work. The rough inspections shall be divided into as many inspections as may be necessary to cover all roughing-in without fail. Report of each such inspection visit shall be submitted to the Architect, Engineer and the Contractor within three days of the inspection.

10.5 Approval by an Inspector does not relieve the Contractor from the responsibilities of furnishing equipment having a quality of performance equivalent to the requirements set forth in these plans and specifications. All work under this contract is subject to the review of the Architect and/or Engineer, whose decision is binding.

10.6 Before final acceptance, the Contractor shall furnish three copies of the certificates of final approval by the Electrical Inspector (as well as all other inspection certificates) to the Engineer with one copy of each to the appropriate government agencies, as applicable. Final payment for the work shall be contingent upon completion of this requirement.

10.7 The Contractor shall test all wiring and connections for continuity and grounds before equipment and fixtures are connected, and when indicated or required, demonstrate by Megger Test the insulation resistance of any circuit or group of circuits. Where such tests indicate the possibility of faulty insulation, locate the point of such fault, pull out the defective conductor, replacing same with new and demonstrate by further test the elimination of such defect.

PART 11 - CHANGES IN WORK

REFER TO GENERAL AND SPECIAL CONDITIONS.

PART 12 - CLAIMS FOR EXTRA COST

REFER TO GENERAL AND SPECIAL CONDITIONS.

PART 13 - SURVEYS, MEASUREMENTS AND GRADES

13.1 The Contractor shall lay out his work and be responsible for all necessary lines, levels, elevations and measurements. He must verify the figures shown on the drawings before laying out the work and will be held responsible for any error resulting from his failure to do so.

13.2 The Contractor shall base all measurements, both horizontal and vertical from established bench marks. All work shall agree with these established lines and levels. Verify all measurements at site and check the correctness of same as related to the work.

13.3 Should the Contractor discover any discrepancy between actual measurements and those indicated, which prevents following good practice or the intent of the drawings and specifications, he shall notify the Engineer thru normal channels of job communication and shall not proceed with his work until he has received instructions from the Engineer.

PART 14 - TEMPORARY USE OF EQUIPMENT

14.1 The permanent equipment, when installed, may be used for temporary services, subject to consent of the Engineer and Owner. Should the permanent systems be used for this purpose, each Contractor shall pay for all temporary connections required and any replacements required due to damage without cost, leaving the equipment and installation in "as new" condition. The Contractor may be required to bear utility costs, user fees, etc.

14.2 Permission to use the permanent equipment does not relieve the Contractors who utilize this equipment from the responsibility for any damages to the building construction and/or equipment which might result because of its use.

PART 15 - TEMPORARY SERVICES

15.1 The Contractor shall arrange for temporary electrical and other services which he may require to accomplish his work. In the absence of other provisions in the contract, the Contractor shall provide for his own temporary services of all types, including the cost of connections, utility company fees, construction, removal, etc., in his bid.

PART 16 - RECORD DRAWINGS

16.1 The Contractor shall insure that any deviations from the design are being recorded daily or as necessary on record drawings being maintained by the Contractor. Dimensions from fixed, visible permanent lines or landmarks shown in vertical and horizontal ways shall be utilized. Compliance shall be a requirement for final payment. Pay particular attention to the location of underfloor or underground exterior in-contract or utility-owned or leased service lines, main switches and other appurtenances important to the maintenance and safety of the Electrical System. Deliver these record drawings to the Engineer at the completion of the work.

PART 17 - MATERIALS AND WORKMANSHIP

17.1 All electrical equipment, materials and articles incorporated in the work shall be new and of comparable quality to that specified. All workmanship shall be first-class and shall be performed by technicians skilled and regularly employed in their respective trades. The Contractor shall determine that the equipment he proposes to furnish can be brought into the building(s) and installed within the space available. All equipment shall be installed so that all parts are readily accessible for inspection, maintenance, replacement, etc. Extra compensation will not be allowed for relocation of equipment for accessibility or for dismantling equipment to obtain entrance into the building(s).

17.2 All conduit and/or conductors shall be concealed in or below walls, floors or above ceilings unless otherwise noted. All controllers, devices and wiring required shall be installed to make up complete systems as indicated on the drawings and specified herein.

17.3 All materials, where applicable, shall bear Underwriters' Laboratories label or that of another Engineer-approved testing agency, where such a standard has been established.

17.4 Each length of conduit, wireway, duct, conductor, cable, fitting, controller and device used in the electrical systems shall be stamped or indelibly marked with the makers mark or name.

17.5 All electrical equipment shall bear the manufacturer's name and address and shall indicate its electrical capacity and characteristics.

17.6 All electrical materials, equipment and appliances shall conform to the latest standards of the National Electric Manufacturers Association (NEMA) and the National Board of Fire Underwriters (NBFU) and shall be approved by the Owner's insuring agency if so required.

PART 18 - QUALIFICATIONS OF WORKMEN

18.1 All contractors bidding this project must have been a licensed company for a minimum of three years to qualify to bid this project. Individual employee experience does not supercede this requirement.

18.2 All specialty contractors bidding the electrical work must have completed one project of 70% this contract cost size and two projects of 50% this subcontract cost size.

18.3 All electrical work shall be accomplished by qualified workmen competent in the area of work for which they are responsible. Untrained and incompetent workmen as evidenced by their workmanship shall be relieved of their responsibilities in those areas. The Engineer shall reserve the right to determine the quality of workmanship of any workman and unqualified or incompetent workmen shall refrain from work in areas not satisfactory to him. Requests for relief of a workman shall be made through the normal channels of responsibility established by the Architect or the contract document provisions.

18.4 Special electrical systems, such as Fire Detection and Alarm Systems, Telecommunications or Data Systems, Video Systems, Special Electronic Systems, Control Systems, etc., shall be installed by workmen normally engaged or employed in these respective trades. As an exception to this, where small amounts of such work are required and are, in the opinion of the Engineer, within the competency of workmen directly employed by the Contractor involved, they may be provided by this Contractor. See 270610 for qualification requirements for telecommunication contractor who is responsible for the network cable and equipment installation.

PART 19 - CONDUCT OF WORKMEN

19.1 The Contractor shall be responsible for the conduct of all workmen under his supervision. Misconduct on the part of any workmen to the extent of creating a safety hazard, or endangering the lives and property of others, shall result in the prompt relief of that workman. The consumption or influence of alcoholic beverages, narcotics or illegally used controlled substances on the jobsite is strictly forbidden.

PART 20 - COOPERATION AND COORDINATION BETWEEN TRADES

20.1 The Contractor is expressly directed to read the General Conditions and all detailed sections of these specifications for all other trades and to study all drawings applicable to his work, including Architectural, Mechanical, Structural and other pertinent Drawings, to the end that complete coordination between trades will be affected.

20.2 Refer to Coordination Among Trades, Systems Interfacing and Connection of Equipment Furnished by Others section of these Specifications for further coordination requirements.

PART 21 - PROTECTION OF EQUIPMENT

21.1 The Contractor shall be entirely responsible for all material and equipment furnished by him in connection with his work and special care shall be taken to properly protect all parts thereof from damage during the construction period. Such protection shall be by a means acceptable to the Engineer. All rough-in conduit shall be properly plugged or capped during construction in a manner approved by the Engineer. Equipment damaged while stored on site either before or after installation shall be repaired or replaced (as determined by the Engineer) by the responsible Contractor.

PART 22 - SMOKE AND FIRE PROOFING

22
22.1 The Contractor shall not penetrate rated fire walls, ceilings or floors with conduit, cable, bus duct, wireway or other raceway system unless all penetrations are protected in a code compliant manner which maintains the rating of the assembly. Smoke and fire stop all openings made in walls,

chases, ceiling and floors. Patch all openings around conduit, wireway, bus duct, etc., with appropriate type material to smoke stop walls and provide needed fire rating at fire walls, ceilings and floors. Smoke and fire proofing materials and method of application shall be approved by the local authority having jurisdiction.

22.2 Contractor to provide heat detectors in the area of construction with complete fire detection until fire alarm system is operational and construction is complete.

PART 24 - FINAL CONNECTIONS TO EQUIPMENT

24.1 The roughing-in and final connections to all equipment furnished under this and all other sections of the contract documents or by others, shall be included in the Contract and shall consist of furnishing all labor and materials for connection. The Contractor shall carefully coordinate with equipment suppliers, manufacturer's representatives, the vendor or other trades to provide complete electrical and dimensional interface to all such equipment (fire suppression, elevators, power transfer switches, smoke control devices, door hardware, etc., etc.).

PART 25 – NOT USED

PART 26 - ACCESSIBILITY

26.1 The Contractor shall be responsible for the sufficiency of the size of shafts and chases, the adequate clearance in partitions and above suspended ceilings for the proper installation of his work. He shall cooperate with the General Contractor (or Construction Manager) and all other Contractors whose work is in the same space, and shall advise each Contractor of his requirements. Such spaces and clearances shall be kept to the minimum size required to ensure adequate clearance and access.

26.2 The Contractor shall locate all equipment which must be serviced, operated, or maintained in fully accessible positions. Equipment shall include but not be limited to junction boxes, pull boxes, contactors, panels, disconnects, controllers, switchgear, etc. Minor deviations from drawings may be made to allow for better accessibility, and any change shall be approved where the equipment is concealed.

26.3 Each Contractor shall provide (or arrange for the provision by other trades) the access panels for each concealed junction box, pull box, fixtures or electrical device requiring access or service as shown on Engineer's plans or as required. Locations of these panels shall be identified in sufficient time to be installed in the normal course of work. All access panels shall be installed in accord with the Architect's standards for such work.

26.4 Access Doors; in Ceilings or Walls:

26.4.1 In mechanical, electrical, or service spaces:

14 gauge aluminum brushed satin finish, 1" border.

26.4.3 In finished areas:

14 gauge primed steel with 1" border to accept the architectural finishes specified for the space. Confirm these provisions with the Architect prior to obtaining materials or installing any such work.

26.4.3 In fire or smoke rated partitions, access doors shall be provided that equal or exceed the required rating of the construction they are mounted in.

PART 27 - ELECTRICAL CONNECTIONS

27.1 The Contractor shall furnish and install all power wiring complete from power source to motor or equipment junction box, including power wiring through starters. The Contractor shall install all starters not factory mounted on equipment. Unless otherwise noted, the supplier of equipment shall furnish starters with the equipment. Also refer to Division 20, 22, 23, 26, and 27 of Specifications, shop drawings and equipment schedules for additional information.

27.2 All control, interlock, sensor, thermocouple and other wiring required for equipment operation shall be provided by the Contractor. All such installations shall be fully compliant with all requirements of Division 26 regardless of which trade actually installs such wiring. Equipment shall be provided for current and voltage characteristics as indicated or required. All wiring shall be enclosed in raceways unless otherwise noted.

27.3 Each Contractor or sub-contractor, prior to bidding the work, shall coordinate power, control, sensor, interlock and all other wiring requirements for equipment or motors with all other contractors or sub-contractors, to ensure all needed wiring is provided in the Contract. Failure to make such coordination shall not be justification for claims of extra cost or a time extension to the Contract.

PART 28 - NOT USED

PART 29 - CUTTING AND PATCHING

29.1 Unless otherwise indicated or specified, the Contractor shall provide cutting and patching necessary to install the work specified in this Division. Patching shall match adjacent surfaces to the satisfaction of the Engineer and shall be in accord with the Architect's standards for such work, as applicable.

29.2 No structural members shall be cut without the approval of the Structural Engineer and all such cutting shall be done in a manner directed by him.

PART 30 - SLEEVES AND PLATES

30.1 Each Contractor shall provide and locate all sleeves and inserts required for his work before the floors and walls are built, or shall be responsible for the cost of cutting and patching required where sleeves and inserts were not installed, or where incorrectly located. Each Contractor shall do all drilling required for the installation of his hangers. Drilling of anchor holes may be prohibited in post-tensioned concrete construction, in which case the Contractor shall request approved methods from the Architect and shall carefully coordinate setting of inserts, etc., with the Structural Engineer and/or Architect.

30.2 Sleeves shall be provided for all conduit passing thru concrete floor slabs and concrete, masonry, tile and gypsum wall construction. Sleeves shall not be provided for piping running embedded in concrete or insulating concrete slabs on grade, unless otherwise noted.

30.3 Where sleeves are placed in exterior walls below grade, the space between the pipe or conduit and the sleeves shall be packed with oakum and lead, mechanical waterstop or other approved material and made completely water tight by a method approved by the Engineer and/or Architect.

30.4 Where conduit motion due to expansion and contraction will occur, make sleeves of sufficient diameter to permit free movement of pipe. Check floor and wall construction finishes to determine proper length of sleeves for various locations; make actual lengths to suit the following:

30.4.1 Terminate sleeves flush with walls, partitions and ceiling.

30.4.2 In all areas where pipes are exposed, extend sleeves ½ inch above finished floor, except in rooms having floor drains, where sleeves shall be extended 3/4 inches above floor.

30.5 Sleeves shall be constructed of 24 gauge galvanized sheet steel with lock seam joints for all sleeves set in concrete floor slabs terminating flush with the floor. All other sleeves shall be constructed of galvanized steel pipe unless otherwise indicated on the drawings.

30.6 Fasten sleeves securely in floors, walls, so that they will not become displaced when concrete is poured or when other construction occurs around them. Take precautions to prevent concrete, plaster or other materials being forced into the space between pipe and sleeve during construction. Fire and smoke stop all sleeves in a manner approved by the local authority having jurisdiction or per prevailing codes.

PART 31 - WEATHERPROOFING

31.1 Where any work pierces waterproofing, including waterproof concrete, the method of installation shall be as approved by the Architect and/or Engineer before work is done. The Contractor shall furnish all necessary sleeves, caulking and flashing required to make openings absolutely watertight.

31.2 Wherever work penetrates roofing, it shall be done in a manner that will not diminish or void the roofing guarantee or warranty in any way. Coordinate all such work with the roofing installer.

PART 32 - OPERATING INSTRUCTIONS

32.1 Upon completion of all work and all tests, each Contractor shall furnish the necessary skilled labor and helpers for operating his systems and equipment for a period of three days of eight hours each, or as otherwise specified. During this period, instruct the Owner or his representative fully in the operations, adjustment, and maintenance of all equipment furnished. Give at least one week's written notice to the Owner, Architect and Engineer in advance of this period. The Engineer may attend any such training sessions or operational demonstrations. The Contractor shall certify in writing to the Engineer that such demonstrations have taken place, noting the date, time and names of the Owner's representative that were present.

32.2 Each Contractor shall furnish three complete bound sets for approval to the Engineer of typewritten and/or blueprinted instructions for operating and maintaining all systems and equipment included in this contract. All instructions shall be submitted in draft, for approval, prior to final issue. Manufacturer's advertising literature or catalogs will not be acceptable for operating and maintenance instructions.

32.3 Each Contractor, in the above mentioned instructions, shall include the maintenance schedule for the principal items of equipment furnished under this contract and a detailed, easy to read parts list and the name and address of the nearest source of supply.

PART 33 - SCAFFOLDING, RIGGING AND HOISTING

33.1 The Contractor shall furnish all scaffolding, rigging, hoisting, and services necessary for erection and delivery into the premises of any equipment and apparatus furnished. Remove same from premises when no longer required.

PART 34 - CLEANING

34.1 The Contractor shall, at all times, keep the area of his work presentable to the public and clean of rubbish caused by his operations; and at the completion of the work, shall remove all rubbish, all of his tools, equipment, temporary work and surplus materials, from and about the premises, and shall leave the work clean and ready for use. If the Contractor does not attend to such cleaning immediately upon request, the Engineer may cause cleaning to be done by others and charge the cost of same to the responsible Contractor. Each Contractor shall be responsible or all damage from fire which originates in, or is propagated by, accumulations of his rubbish or debris.

34.2 After completion of all work and before final acceptance of the work, each Contractor shall thoroughly clean all equipment and materials and shall remove all foreign matter such as grease, dirt, plaster, labels, stickers, etc., from the exterior of materials, equipment and all associated fabrication. Pay particular attention to finished area surfaces such as lighting fixture lenses, lamps, reflectors, panels, etc.

PART 35 - PAINTING

35.1 Each fixture device, panel, junction box, etc., that is located in a finished area shall be provided with finish of color and type as selected or approved by the Architect or Engineer. If custom color is required, it shall be provided at no additional cost to the Owner. All other equipment, fixtures or devices located in finished or unfinished areas, that are not required to have or are provided with finish color or coating shall be provided in a prime painted condition, ready to receive finish paint or coating. All galvanized metal in finished areas shall be properly prepared with special processes to receive finish paint as directed and approved by the Architect.

PART 36 - INDEMNIFICATION

36.1 Refer to the General Conditions and Special Conditions of the Contract Documents for the Contractors indemnification obligations.

PART 37 - HAZARDOUS MATERIALS

37.1 The Contractor is hereby advised that it is possible that asbestos and/or other hazardous materials are or were present in this building(s). Any worker, occupant, visitor, inspector, etc., who encounters any material of whose content they are not certain shall promptly report the existence and location of that material to the Contractor and/or Owner. The Contractor shall, as a part of his work, insure that his workers are aware of this potential and what they are to do in the event of suspicion. He shall also keep uninformed persons from the premises during construction. Furthermore, the Contractor shall insure that no one comes near to or in contact with any such material or fumes therefrom until its content can be ascertained to be non-hazardous. Refer to the General Conditions and Special Conditions of the Contract Documents for detailed requirements related to any Hazardous Materials encountered.

37.2 CMTA, Inc., Consulting Engineers, have no expertise in the determination of the presence of hazardous materials. Therefore, no attempt has been made by them to identify the existence or location of any such material. Furthermore, CMTA nor any affiliate thereof will neither offer nor make any recommendations relative to the removal, handling or disposal of such material.

37.3 If the work interfaces, connects or relates in any way with or to existing components which contain or bear any hazardous material, asbestos being one, then, it shall be the Contractor's sole responsibility to contact the Construction Manager and so advise him immediately.

37.4 The Contractor by execution of the contract for any work and/or by the accomplishment of any work thereby agrees to bring no claim relative to hazardous materials for negligence, breach of contract, indemnity, or any other such item against CMTA, its principals, employees, agents or

consultants. Refer to the General Conditions and Special Conditions of the Contract Documents for the Contractors indemnification obligations.

PART 38 – ABOVE-CEILING AND FINAL PUNCH LISTS

38.1 The Contractor shall review each area and prepare a punch list for each of the subcontractors, as applicable, for at least two stages of the project.

38.2 For review of the above-ceiling work that will be concealed by tile or other materials well before substantial completion.

38.3 For review of all other work as the project nears substantial completion.

38.4 When all work from the Contractor's punch list is complete at each of these stages and prior to completing ceiling installations (or at the final punch list stage), the Contractor shall request that the Engineer develop a punch list. This request is to be made in writing seven days prior to the proposed date. After all corrections have been made from the Engineer's punch list, the Contractor shall review and initial off on each item. This signed-off punch list and all work prior to the ceilings being installed and at the final punch list review.

38.5 If additional visits are required by the Engineer to review work not completed by this review, the Engineer shall be reimbursed directly by the Contractor by check or money order (due net 10 days from date of each additional visit) at a rate of $125.00 per hour for extra trips required to complete either of the above-ceiling or final punch lists.

END OF SECTION 28 0501

SECTION 28 1643 - PERIMETER SECURITY SAFETY

PART 1 - GENERAL

1.1 SCOPE

A. This section details product and execution requirements for Security Management System (SMS) for the project.

B. Work includes furnishing all labor, materials, tools and equipment, and documentation required for a complete turnkey working system as specified in this Section. SMS shall consist of but not be limited to Door Controllers, Card Readers, Sensors, Switches, Conduit, Boxes, Cable and Wired Devices. Programming and cardholder enrolling are also considered as part of installation as well as coordination with UKPD.

C. Unless noted otherwise, "Contractor" shall refer to SMS Integrator & Installer.

Communications routing from SMS to door controllers shall be via Owner LAN.

1.2 RELATED WORK

A. Related Sections in other divisions of Work:

087100 – DOOR HARDWARE
260000 - ELECTRIC
270000 - COMMUNICATIONS

1.3 REFERENCES AND STANDARDS

A. Work under this Section is subject to requirements of Division 1 General Requirements.

B. Other applicable standards are as follows:

UL 294 - Access Control System Units.
UL 1076 - Proprietary Burglar Alarm Units and Systems.
FCC Rules and Regulations Part 15, Radio Frequency Devices

C. All work and materials shall conform in every detail to rules and requirements of National Fire Protection Association, Kentucky Electrical Code, University of Kentucky Standards and University of Kentucky CNS Standards. UKCNS standards can be found online at the following link: https://www.uky.edu/cpmd/design-standards/divisions-20---29---facility-services-subgroup and click on Division 270000 to find the latest version.

D. All materials shall be listed by UL and shall bear UL label. If UL has no published standards for a particular item, then other national independent testing standards shall apply and such items shall bear those labels. Where UL has, an applicable system listing and label entire system shall be so labeled.

1.4 DEFINITIONS AND ABBREVIATIONS

A. SMS – Security Management System

1.5 WORK BY OWNER

A. Owner shall:

Provide list of cardholders for initial SMS programming by Contractor.
Provide scheduling of each door, including:

a. Alarm activations and distribution.
b. Door lock and unlock.

c. Cardholder validation by day and time.
d. Delay time of door open alarm.
e. Duration of lock activation upon credential authorization.

1.6 SUBMITTALS

A. Product Data: For each type of product indicated.

B. System Design drawings with cable routing, device location and labeling.

C. Operation statements for all SMS doors.

D. Communication Closet layout drawings.

E. Certifications for BICSI as required by UKCNS per Division 27.

F. Owner Operation Manuals for all installed equipment as well as documentation of all programing.

G. As built drawings showing cable pathways and routing. As built drawings to also show any changes made to original ESS drawings.

1.7 QUALITY ASSURANCE

A. Security Management System Contractor shall:

Have successfully completed two (2) Security Systems projects in equal magnitude of the system specified in following sections. Contractor shall be a Lenel Authorized VAR in good standing. Proper proof of certifications will be submitted at time of Bid. Be responsible for complete turnkey system up to but not including SMS programing, programing cost will be included in BID with Programing work being done by UKPD's Lenel VAR of Record. Be responsible to coordinate with UKPD's Lenel VAR of Record to complete system installation. Comply with all certification requirements set out in Division 27 as it related to the installation of DATA cabling. Specifically, contractor will comply with the requirement of all DATA cabling being installed by BICSI certified installers and installation supervised by a registered in good standing RCDD in the full-time employee of the project contractor.

1.8 GUARANTEE

A. Warranty requirements for Security Management System (SMS) shall be two (2) years on all parts and labor commencing on Date of Substantial Completion. Those requirements apply to all components covered in this section

PART 2 - PRODUCTS

2.1 GENERAL

A. Security Management System shall provide ability to:

Unlock electrified door locks upon authentication of submitted credential to local card readers.
Monitor door alarms and remotely unlock.
Lock doors on an automated schedule from central system.
Unlock doors as required by code via fire alarm relays.
Annunciate intrusion alarms from remote sensors.
Unlock individual doors manually via operator interface.
Lock doors from central Operations Center.

B. System must support the Campus Central One Card ID Badge.

2.2 NETWORK SMS

A. Manufacturer: Lenel Security Systems

2.3 SYSTEM CONTROLLER

A. Manufacturer: Mercury Systems LNL-2220. Controllers will include all power supplies, Life Safety FPO250 or Mercury Systems approved equal and Battery Back Up Units. All parts and pieces needed for a complete UL listed working turnkey system. All Lenel Licensing required for UK Campus Enterprise System shall be included Contractors Bid.

2.4 MULTI-DOOR DOOR CONTROLLER

A. Manufacturer: Mercury Systems LNL-1320.

Controller shall accommodate minimum two card readers and associated inputs/outputs.

2.5 MULTI-INPUT / OUTPUT CONTROLLER

A. Manufacturer: Mercury Systems LNL-1100 / LNL-1200.

Controller shall accommodate 16 programmable inputs; 2 programmable relay outputs

2.6 PROXIMITY CARD READERS

A. Manufacturer: HID.

Wall-mount: Model RP40 (6125C) iClass Standard Reader.
Mullion-mount Reader RP15 (6145C) multiCLASS.

B. General

Reader(s) shall:

a. Be furnished in Wiegand output model and shall be sealed in a polycarbonate enclosure designed to withstand harsh environments.
b. Unless otherwise specified, reader covers shall be furnished in “black” color – Classic design.
c. Recognize 125 kHz and iClass 13.56 MHz signals
d. Contain an indicator to indicate valid and invalid card
e. Be designed for ambient operating environment.
f. Be powered remotely using centralized power supplies.
g. Read iClass Corporate 1000 sector information
h. Include Near Field / Bluetooth capabilities.

2.7 BIOMETRIC READERS (Eye Scanners)

Manufacturer: EyeLock

Wall-mount Model: nano NXT

Scanner(s) shall:

a. Be mounted at 54” AFF typically
b. Be mounted above card reader.
c. Always be installed in conjunction with a Card Reader
d. Be installed with DATA cable connected to POE Network Switch port.

e. Be installed with 12-24 Volt DC Power via hard wire cable to dedicated Life Safety Power Supply located in nearest UKCNS Data Closet. Each Scanner Unit shall be fused at the power supply individually.

2.8 DOOR CONTACTS (DPS / Monitor Points when not included in Door Hardware)

Steel Door contacts.

Manufacturers: GE Interlogix 1078 Series or approved equal.

2.9 REQUEST-TO-EXIT MOTIONS SENSORS (When not included in Door Hardware)

Manufacturers: GE, Honeywell, or approved equivalent.

1. Provide door header mounted request to exit motion sensors as indicated on Drawings.

2. Minimum Specifications

a. Detection technology Passive infrared
b. Detection pattern Narrow beam 35-degree cone
c. Output contact normally open contact is closed when sensing zone is entered or exited
d. Power requirements 12 – 24 VDC
e. Mounting: Door header

2.11 POWER SUPPLIES

A. As required to support Card Reader(s), Door Controller(s), Strike(s), Sensor(s), Eye Scanners and other components for fully operational turnkey system. Each component connected to power supplies shall be independently fused with rated fuses to match the manufacturer requirements for each specific device. Power supply cabinets shall have door locks included and keys shall be turned over to UKPD at substantial completion.

B. Electrified Door hardware power supplies shall be specified by Division 8. Each component connected to power supplies shall be independently fused with rated fuses to match the manufacturer requirements for each specific device.

2.12 CABLING

A. General

Cable shall be:

a. Plenum Rated.

B. Reader Cable

Construction:

a. 18 AWG stranded or as recommended by system manufacturer.
b. Aluminum/Mylar shield with drain wire applied over assembled conductors.

C. Door Lock Power Cable

Provide and install as required for door hardware. Refer to Architectural Door Schedule and Door Hardware documents.

D. Door Contact / Signal Cable

Door Contact/Signal Cable used for monitoring purposes.
Construction:

a. 22 AWG twisted, stranded or as recommended by system manufacturer.
b. Aluminum/Mylar shield with drain wire applied over assembled conductors.

E. Request-to-Exit Motion Detector Signal Cable

Motion Detector Signal Cable used for monitoring purposes.
Construction:

a. 20 AWG stranded or as recommended by system manufacturer.
b. Aluminum/Mylar shield with drain wire applied over assembled conductors.

F. Door Controller Cable

Provide all LAN patch cables, jacks, and faceplates

PART 3 - EXECUTION

3.1 PRE-INSTALLATION COORDINATION

A. Coordinate with Electrical Contractor (Division 260000) that:

Section 280000 provided pathways and equipment back boxes are completed and are coordinated with no conflicts for system installation.
Adequate power has been provided and properly located for security system equipment.
Code-complying fire alarm relays will be installed for cable termination. Fire Alarm contractor will provide relay contacts in Com Closet for connection to Access control panels. Contractor is responsible for coordination with Fire Alarm Contractor. Access control Contractor shall provide all parts and pieces including all cabling from Access control panel to Fire Alarm Contact point.
Coordinate scheduling of work to make sure there are no conflicts.

B. Coordinate with Door Frame supplier (Division 8):

Doors and door frames are properly prepared for electric locking hardware and door position switches are furnished by door type.
Locations of all devices prior to installation.
Electric door power supply locations and connections requirements.

C. Coordinate with the Communications Contractor (Division 27):

Locations of all LAN-connected devices with no conflicts.
Coordinate scheduling of work.

D. At a minimum, coordinate the following with Owner:

VLAN/or network partitioning for SMS system.
Owner-provided IP addresses for SMS devices.
Network infrastructure requirements at SMS head-end Next Level Gateway-6100UK.
Initial database programming.
Planned system downtime.
Programming and training for new system.

E. Coordinate with Construction Manager as required providing a fully functioning turnkey Security system.

F. Coordinate with all trades on the operation and installation of ADA entrance doors with relation to Long Range Card Readers and interconnection with door actuator plates, motor units, Fire Alarm

and Smoke Evacuation System. Contractor will supply any and all associated timer boards or additional parts required for complete operating doors system.

G. Coordination Meetings shall be scheduled and conducted beginning within 60 days of contract award and continuing till project conclusion inclusive with the A/E team and Commissioning Agent.

3.2 INSTALLATION

A. General

Verify acceptance of each type of specified request-to-exit hardware for each application with local life safety code officials.
Provide tamper proof fasteners for all equipment in public areas. Fastener finish shall match equipment finish.
Maintain minimum three feet of access in front of class 1 electrical equipment.

B. Delivery, Storage, and Handling

Deliver products to and receive products at site under provisions of General Requirements.
Materials shall be stored according to manufacturer's recommendations at minimum.

C. Equipment

Provide equipment as indicated on Drawings and specified herein. Additional specific installation requirements are as follows:

Door Controllers

a. Provide Door Controllers in Data Closets as shown on Drawings.
b. Provide connection to 120 VAC via hardwire conduit. Coordination with Division 260000.
c. Separate 24 VDC and 120 VAC, wire, cable, and devices by 12” minimum space.
d. Enclose wire and cable in wire ways or bundle with wire exiting wire ways to terminal strips or panel mounted devices.
e. Space controllers according to manufacturer’s requirements. Ensure adequate space is allowed for device heat dissipation.
f. Do not place controller or control devices on enclosure sides.

Card Readers

g. Provide card readers and card reader devices as shown on Drawings.
h. Wire card reader LEDs to indicate valid and invalid card reads, and door locked and unlocked conditions. All card reader LED indicators shall operate identically throughout Project. LED shall be red in normal, secured state, and shall be green on valid card read and while door is unlocked.

Electric Locking Mechanics

i. Interface with electric locking mechanics as required by the door hardware.
j. Provide lock control of electrified locking mechanics through output contacts activated by Door Controller.

Electrified Panic Devices

k. Interface with electrified panic devices as indicated on Drawings. Provide all low-voltage wire and connections between SMS power transfer device and electric locking mechanics.
l. Provide lock control of electrified panic devices through output contacts activated by Door Controller.
m. Provide all 120VAC if required for Device operation per hardware specifications. Provide connection to Fire Alarm connection points as required by Code. Fire Alarm Contractor to provide relay contacts in Com closets for this purpose. Contractor is responsible for all parts and pieces including cable from Access control panel to the Fire Alarm relay contract. Contractor is responsible for coordination with Fire Alarm contractor.

Door Position Switches

n. Install as shown on drawings.
o. Coordinate pathways.

Request-to-Exit Motion Sensors

p. Provide as shown on drawings.
q. Coordinate pathways.

Fire Alarm Interface

r. Connect (hard wire) door controller to building fire alarm system for fail-safe release upon any fire alarm.
s. Interface with low voltage / low current normally closed dry contact from fire alarm system provided by fire alarm Contractor (verify exact location in Data Closet for connection with FA). Contact shall open on any fire alarm condition.
t. Provide all additional UL listed fail-safe relays and power supplies necessary to interface to this contact and unlock all fail-secure doors.
u. Coordination Meetings with Fire Alarm Contractor shall be scheduled and conducted beginning within 60 days of contract award and continuing till project conclusion inclusive with the A/E team and Commissioning Agent.

Cable Installation

v. Visually inspect all wire and cable for faulty insulation prior to installation.
w. Furnish and install all specified wire and cable as required for functioning SMS system.
x. Neatly lace, dress and support cabling.
y. Pull cables in accordance with cable manufacturer's recommendations University of Kentucky CNS and ANSI/EEE C2 Standards.

1) Do not exceed manufacturer's recommended pulling tensions.
2) Do not install bruised, kinked, scored, deformed, or abraded cable.
3) Do not splice cable between indicated termination, tap, or junction points.
4) Remove and discard cable where damaged during installation and replace it with new cable.
5) Pull all cable by hand unless installation conditions require mechanical assistance.

z. Run all wire and cable continuous from device location to final point of termination. No mid-run cable splices shall be allowed.
aa. Cables shall not be attached to existing cabling, plumbing or steam piping, ductwork, ceiling supports, or electrical or communications conduit.
bb. Cable shall never be laid directly on a ceiling grid or attached in any manner to ceiling grid wires.
cc. Furnish and install all cable such that ample slack is supplied at device terminating end of cable to compensate for any final field modifications at install locations.

1) Loosely coil slack in “Figure-eight” in a manner that prevents kinking.
2) Loop radius shall be at least 4X minimum bend radius for cable.
3) Slack length of cable shall be 4 feet (minimum).

dd. Provide code-compliant fire proofing techniques for all penetrations of fire rated partitions and slabs, where penetrations are made by or used for installation of SMS System.

ee. Coordinate routing of wire and cable requiring isolation from power, radio frequency (RF), electromagnetic interference (EMI), telephone, etc. with General Contractor.

ff. At no time, shall any cable be subjected to a bend less than manufacturer’s specified minimum radius and UK CNS Standards.

gg. Provide grommets and strain relief material where necessary to avoid abrasion of wire and excess tension on Wire and Cable.

hh. Make connections with solder-less devices, mechanically and electrically secured in accordance with manufacturers’ recommendations. Wire nuts shall not be an acceptable means of connecting wire and cable.

ii. Utilize conduit and cable trays and or pathways to route SMS cables from each door or device to Door Controller. Follow University of Kentucky CNS standards for low voltage cabling.

jj. No A/C current-carrying conductors are allowed in same pathway as signal or low-voltage power cables.

kk. Wire and cable within Door Controllers, enclosures and or other security enclosures shall be neatly installed, completely terminated, pulled tight with slack removed and routed in such a way as to allow direct, unimpeded access to equipment within enclosure. All wire and cable shall be bundled and tied. Ties shall be similar to T&B TyRap cable ties.

ll. Use of electrical tape for splices and connections shall not be acceptable.

mm. Make connections with solder less devices, mechanically and electrically secured in accordance with manufacturers’ recommendations. Wire nuts shall not be an acceptable means of connecting wire and cable.

nn. All system cabling within vertical risers (as required) shall be bundled, wrapped and tied to structure at three-meter intervals in order to isolate it from other wire and cable within riser. Additionally, all wire and cable within shaft shall be supported at least every two floors using Greenlee Slack Grips (Split Mesh Lace Closing) or approved equal. Provide all personnel and equipment necessary to install and support cable. All equipment shall be UL listed for application.

D. System Programming and Data Entry

Collect all data required to make the Security Management System operational. Deliver data to Owner on data entry forms, utilizing data from Contract Documents, Contractor's field surveys and all or pertinent information in Contractor's possession required for complete installation database. Identify and request from Owner any additional data needed to make SMS System fully operational and integrated. Completed forms shall be delivered to Owner for review and approval at least 30 days prior to Contractor's scheduled needed date. Contractor will coordinate with University of Kentucky Police Department Campus Security System Lenel VAR of Record (Stanley Security) for database and Campus Cloud Services programming and Integration. Contractor shall provide Door Counts, Panel Counts and locations, Reader Counts and input, output counts. Contractor shall also supply any special devices or operations that may require special programing. Examples would be Elevators, Biometric readers and others. Contractor shall request a quote for this programing work, two (2) Client Workstation Licenses and any other Lenel Licenses required from Stanley Security. Stanley Security Group Contact person is Vicky Daugherty (912-246-9466) Vicky.Daugherty@sbdinc.com. This and any fees associated with the Lenel programing shall be included in Contractor’s Bid. Contractors Bid shall be for a

complete turn key total functional system. Contractor shall provide time in Bid to coordinate and participate with Stanley Security during their testing and programing.

Provide all initial system information for SMS setup including, but not limited to following:

a. SMS Card Reader Information

1) Coordinate all card reader values and text, including descriptors, alarm messages, map call up and identification with Owner.

b. Input and output points for SMS. Coordinate all input and output priorities and text, including descriptors, alarm messages, Video Camera call up, and map call up and identification with Engineer.

c. Initial system users, including levels of access. This shall include designation of Owner's representative at "Super User" level immediately upon SMS initialization.

d. Provide Elevator access per cardholder by cab and floor.

E. Furnish and install all SMS wire and cable including LAN cabling.

F. Provide code-compliant fire proofing techniques for all penetrations of fire rated partitions and slabs, where penetrations are made by or used for installation of SMS.

G. 120 VAC power dedicated to security system shall be on provided Emergency Generator Power. Gateways shall be on properly sized UPS units on Emergency Generator backup circuits. UPS units are provided by UKCNS. Contractor shall coordinate with UKCNS to provide power requirements for all equipment. A meeting with UKCNS to coordinate this and other IT related issues will be scheduled within 60 days of Contract award and be inclusive of A / E Team, UKCNS and Commissioning Agent.

H. Connect to AC power with provided UL listed power supplies and transformers to distribute low voltage power to system components as required.

I. Provide hinged cover UL listed terminal cabinets with tamper switches for all power supplies, transformers and power distribution terminal strips. Provide all conduit and wiring from AC power facilities to terminal cabinets.

J. Provide protection against spikes, surges, noise, and or line problems for all system equipment and components.

K. Provide protection on all exterior, control, power, signal cables and conductors against power surges. Each surge protector shall be UL Listed.

L. In no instance, shall any UL labeled door or frame be drilled, cut, penetrated, or modified in any way.

M. Contractor shall be responsible for replacing any labeled door or frame that is modified without written approval from project Engineer.

N. Label all controls as necessary to agree with their function.

O. Label all Wire and Cable in common at both ends using a permanent method such as self-laminating cable marking tape.

Tags shall be attached to wire and cable nylon cable ties in an accessible location so that they can easily be read.

Tags shall be installed when wire and cables are installed.

Labeling shall be consistent with existing cable labeling system and agree with Record Documentation.

P. Place wire identification numbers at each end of conductor involved by using sleeve type, heat shrinkable markers. Markers shall be installed so as to be readable from left to right or top to bottom.

Q. Mark all connectors with common designations for mating connectors. Connector designations shall be indicated on record drawings.

R. Coil all spare conductors in device back box, panel wire way, or top of panel where wire way is not provided. Conductors shall be neatly bundled and tagged.

S. Install integrated security and communication system in accordance with manufacturer's instructions at locations indicated on the Drawings.

T. Mount equipment plumb, level, square, and secure. For video entrance stations and video door stations, comply with manufacturer's design requirements to provide optimum picture quality of station monitoring.

3.3 DEMONSTRATION AND TRAINING

A. Coordinate with Owner and UKPD to establish required training.

B. Contractor shall be on call during Warranty period to answer any questions Owner might have. The Owner reserves the right to use any excess training hours, not used by time of system completion, for future training as requested by Owner until total number of training hours has been used.

C. Demonstration:

Demonstrate that integrated security and communication system functions properly. Perform demonstration at final system inspection by qualified representative of manufacturer working with UK Lenel VAR of Record.

3.4 SYSTEM START-UP

A. Start-up includes all Contractor-Furnished, Contractor-Installed (CFCI) systems and equipment.

B. Work shall be complete and ready to operate prior to final acceptance.

C. All database programming for systems up to inaugural day of beneficial use of Security System shall be coordinated thru UKPD and UK Lenel VAR of Record.

D. Adjust integrated security and communication system for proper operation in accordance with manufacturer’s instructions.

3.5 SYSTEM ACCEPTANCE

A. Final acceptance testing of Work will be coordinated and observed by owner representatives and UKPD in coordination with Stanley Security Solutions.

B. Prior to testing, Contractor shall submit two sets of preliminary (draft) Record Drawings to owner and UKPD. Preliminary Record Drawings are to be used by owner and UKPD to conduct system final test.

C. At completion of Work, remove all waste materials, rubbish, Contractor’s and subcontractors’ tools, construction equipment, machinery and all surplus materials.

3.6 PROTECTION

A. Protect installed integrated security and communication system from damage during construction.

END OF SECTION 28 1643

SECTION 28 2300 - VIDEO SURVEILLANCE

PART 1 - GENERAL

1.1 SCOPE

This section details product and execution requirements for VIDEO MANAGEMENT SYSTEM for the project.

Work includes furnishing all labor, materials, tools and equipment, and documentation required for a complete turnkey working system as specified in this Section. VMS shall consist of but not be limited to, Cameras, Monitors, Conduit, Boxes, Cable and Wired Devices. Programming work sheets and camera view setup is considered part of installation as well as coordination with UKPD, Stanley Security and Salient Systems.

Unless noted otherwise, "Contractor" shall refer to VMS Integrator & Installer.

Communications routing from VMS Servers to Cameras shall be via Owner LAN.

Coordinate with any and all trade contractors as required to provide a fully functioning system.

Unless noted otherwise, "Contractor" shall refer to security system integrator & installer.

Applicable provisions of Division 1 shall govern all work under this section.

Video surveillance can be restricted or prohibited by law. This document details technical considerations only. It is assumed that registration, licensing, policies regarding disclosure and privacy (notification, processing of images, time and date stamping, recording of sound, etc.), and or legal obligations are responsibility of Owner.

1.2 RELATED WORK

Related Division 28 Sections include:

1. 281643 - PERIMETER SECURITY SAFETY

Related Sections in other divisions of Work:

2. 087100 - DOOR HARDWARE
3. 260000 - ELECTRIC
4. 270000 - COMMUNICATIONS

1.3 REFERENCES AND STANDARDS

Work under this Section is subject to requirements of Contract Documents including General Conditions, Supplementary Conditions, and sections under Division 1 General Requirements.

All work and materials shall conform in every detail to rules and requirements of National Fire Protection Association, Kentucky Electrical Code, University of Kentucky Standards and University of Kentucky ITS Standards. UKITS standards can be found online at the following link: https://www.uky.edu/cpmd/design-standards/divisions-20---29---facility-services-subgroup and click on Division 270000 to find the latest version.

All materials shall be listed by UL and shall bear UL label. If UL has no published standards for a particular item, then other national independent testing standards shall apply and such items shall bear those labels. Where UL has an applicable system listing and label entire system shall be so labeled.

Other applicable standards are as follows:

1. ANSI/IEEE C2 - National Electrical Safety Code
2. NFPA 70-1999 - National Electrical Code

3. IEEE/ANSI 142-1982 – Recommendations for Grounding of Industrial & Commercial Power Systems.
4. NTSC/EIA RS-170A Video Standard
5. IEEE 802.3 standards for CSMA/CD (Ethernet) based LANs
6. Emissions: FCC 15, Class A; CE: EN55022 (Emissions)
7. CE: EN50082-01 (Immunity)
8. CE, UL 1950; CUL 1950 CE: EN60950 (Safety)
9. State of Kentucky
10. City of Lexington, KY

1.4 DEFINITIONS AND ABBREVIATIONS

VMS – Video Management System

LAN – Local Area Network

1.5 WORK BY OWNER

Owner shall provide:

1. Verify exact security device mounting locations.
2. Verify Acceptable per-camera field-of-view information.
3. Enterprise-wide Data Network / LAN to be utilized by VMS system.
4. Cross-connections from VMS components to building LAN, contractor provides all interconnection cables (Patch Cables) as needed but may not connect to LAN without ITS oversight and approval.
5. All active LAN components (switches, routers) as required for Security system function.
6. IP-address allotment and management for VMS devices as needed.

1.6 SUBMITTALS

Product Data: For each type of product indicated.

System Design drawings with cable routing, device location and labeling.

Communication and Security Closet layouts.

Camera View Modeling.

1.7 QUALITY ASSURANCE

Video Management System Contractor shall:

1. Have successfully completed two (2) Salient Systems projects in equal magnitude of the system specified in following sections. Be fully certified by Salient Systems for Sales and Installation of Salient equipment. Proper proof of certification with Salient will be submitted at time of Bid.

1.8 GUARANTEE

Warranty requirements for Video Management System (VMS) shall be two (2) years on all parts and labor commencing on Date of Substantial Completion. Those requirements apply to all components covered in this section.

PART 2 - PRODUCTS

2.1 GENERAL

VMS system shall deliver high quality; color video over an IP, UTP structured cable system using H.264 /H.265 compression and shall provide for monitoring and recording of all cameras in system as indicated herein and on project Drawings. The VMS allows event-based monitoring of campus and situational awareness though IP cameras centrally managed from the University of Kentucky Police Department Operations Center. The VMS utilizes analytics to identify potential situations on campus and preserving evidence for authorities to review. The Salient VMS has the capability to be securely monitored via mobile devices or off-campus locations, video sharing with outside public safety first responders.

Video shall be configurable from a workstation on the University LAN using standard Browser software.

2.2 IP VIDEO CAMERA (FIXED)

Interior Camera shall be: Axis P3374-V, Hanwha Techwin XND-L6080V.

Elevator Cameras shall be: Axis M3057-PLVE or approved equivalent.

Exterior Camera shall be: Axis P3375-LVE, Hanwha Techwin XNV-L6080R or approved equivalent.

Camera shall:

1. Be ceiling / wall mountable dome-type.
2. Be IP-native.
3. Utilize Power-over-Ethernet (PoE) for device power.
4. Be designed to provide video streams at the minimum HDTV 720p (1280x720) resolution at 30 frames per second using H. 264 / H.265.
5. Be equipped with Day/Night functionality, Wide Dynamic Range (WDR), color video to ½ lux, black and white below ½ lux and feature remote back focus capabilities.
6. Be provided complete with standard interior (3-9 mm nominal) auto-iris lens.
7. Per-camera lens selection dependent upon Owner-required field-of-view.
8. Have a smoked bubble.
9. Have housing and mount color to match surrounding architectural colors.

2.3 NETWORK VIDEO SERVER:

Security Cameras shall be connected to the owners Security LAN by UKCNS personnel and SMS VAR of Record, Stanley Security. Cameras shall be routed to Management Servers and Recording Servers via the Owners Security VAN. Installing Integrator shall complete all Camera Programing worksheets and provide to Stanley Security for System Programing and addition of Cameras to the Campus VMS. Integrator shall coordinate with VAR of Record, Stanley Security to include the cost of this programing in their bid for project. Contact Stanley Security. Stanley Security Group Contact person is Vicky Daugherty (912-246-9466) Vicky.Daugherty@sbdinc.com.

2.4 WIRE AND CABLE

General

1. Provide and install all device DATA cables as per UKITS and Division 270000 requirements. DATA cabling for Security cameras shall be terminated in each DATA Closet, in approved labeled patch panels (As per Division 270000 requirements). Camera cabling should be terminated in jacks at the camera device. Contractor to provide all patch cables. All exterior camera cables shall be provided with Surge protection units on each cable. Proper cable types must be must as per UKITS standards and Division 270000 requirements.

2. Provide all interconnecting system cabling at Security Closets and Communication Closets as well at security device end points. All UKITS standards must be followed. Exterior cameras that exceed the normal distance for copper cable must be installed with Fiber Cable as per UKITS Standards and Division 270000 requirements. At these fiber locations a Rugged / Hardened Switch is required, this switch should be provided by contractor by purchase thru UKITS..
3. Bond metallic system components in all Communications Closets and Security Closets to existing in-room ground bar.
4. Confirm and provide any necessary interface cabling with existing Access Control system.

PART 3 - EXECUTION

3.1 GENERAL

Work performed for installation of VMS system shall be performed by Security System Integrator – “Contractor”.

Provide equipment as indicated on Drawings and specified herein.

Provide all labor and materials necessary to construct systems as described herein to include furnishing and installing all system equipment, interconnecting cabling, programming and start-up, software (including software upgrades and reprogramming as necessary), termination components, mounting hardware, incidentals, accessories, testing, labeling, documentation and training as detailed in following sections.

1. Neatly lace, dress and support cabling.
2. Coordinate any downtime with Owner.

Prior to installation:

3. Conduit and equipment back boxes are as required. Contractor is responsible for coordination with all trades to ensure that conduit and back boxes are correctly placed for VMS use. Contractor is responsible for coordinating installation of conduit and boxes to make sure they are installed on schedule with other trades and are coordinated as to not interfere with other systems or pathways.
4. 120V AC Power is as required and is properly located.
5. LAN structured cabling is as required and properly located and installation has been coordinated with other trades.
6. Coordinate all devices and locations prior to equipment installation with owner.
7. Coordinate Owner-desired camera views, providing camera modeling prior to installation.
8. Coordinate Camera housing and mount finishes with Architect and Owner.

Install and wire equipment in accordance with University of Kentucky ITS Standards, manufacturer’s recommendations, and accepted engineering and installation practices.

Mount system components as recommended by manufacturer. All equipment mounting in Communication Closets must be approved by UK ITS prior to installation.

9. Arrange equipment to facilitate permanent access for use and maintenance.

3.2 CABLE INSTALLATION

Neatly lace, dress and support cabling.

Pull cables in accordance with cable manufacturer's recommendations and ANSI/EEE C2 Standards as well as University of Kentucky ITS Standards and all Division 270000 requirements.

1. Do not exceed manufacturer's recommended pulling tensions.
2. Do not install bruised, kinked, scored, deformed, or abraded cable.
3. Do not splice cable between indicated termination, tap, or junction points.

4. Remove and discard cable where damaged during installation and replace it with new cable.
5. Pull all cable by hand unless installation conditions require mechanical assistance.

Run all wire and cable continuous from device location to final point of termination. No mid-run cable splices shall be allowed.

Furnish and install all cable such that ample slack is supplied at device terminating end of cable to compensate for any final field modifications in camera location.

6. Loosely coil slack in “Figure-eight” in a manner that prevents kinking.
7. Loop radius shall be at least 4X minimum bend radius for cable.
8. Slack length of cable shall be 4 feet (minimum).

Provide code compliant fire proofing techniques for all penetrations of fire rated partitions and slabs, where penetrations are made by or used for installation of Video System.

Coordinate routing of wire and cable requiring isolation from power, radio frequency (RF), electromagnetic interference (EMI), telephone, etc. with Engineer.

At no time shall any cable be subjected to a bend less than manufacturer’s specified minimum radius. Also refer to UKITS Standards.

Provide grommets and strain relief material where necessary to avoid abrasion of wire and excess tension on Wire and Cable.

Make connections with solder-less devices, mechanically and electrically secured in accordance with manufacturers’ recommendations. Wire nuts shall not be an acceptable means of connecting wire and cable.

3.3 IP VIDEO CAMERAS

Mount Video Cameras per project drawings.

Field-verify exact locations and field-of-views with Owner prior to installation.

Provide video camera lenses to accommodate Owner-coordinated field-of-view per camera.

1. Field verify and confirm views with Owner prior to procurement and final installation and adjust camera positions and lens sizes as required upon installation.

Configure resolution, frame rate, password, etc. to match existing system installation, coordinate with UKPD.

Coordinate with Owner prior to installation to confirm required parameters.

Wire interface(s) to external alarms.

3.4 NETWORK CONNECTION

Cross-connections to building LAN by Owner, NO EQUIPMENT MAY BE CONNECTED TO UK NETWORKS BY ANY SUB CONTRACTOR, ONLY BY UK ITS personnel.

3.5 LABELING AND IDENTIFICATION

Labeling protocols to match all UK Security System installations.

1. Cabling, Hardware and Equipment shall be clearly labeled using a Code identifying each piece as unique throughout Video Camera System. This code will aid in identifying hardware for servicing and maintenance.
2. Labels and Tags shall be machine-generated using English character set in black ink on white background labels and Tags.
    a. Self-laminating permanent labels are required on cables; permanent non-marring labels are required on all other hardware/cabinets.

b. No hand-written Labels or Tags shall be allowed.
c. Dymo or Kroy type adhesive backed lettering is not acceptable.

Identify and tag all cables to denote function.

3. Tag shall indicate:

a. System of which cable is a part,
b. Indication of cable destination (e.g. room or component), and
c. Unique alpha-numeric identifier that distinguishes cable from all others in system.

All labels shall be machine generated. Handwritten labeling is not acceptable.

Label all front panel controls used in normal operation of system using plastic laminate engraved labels or approved equal.

4. Firmly affix to panel or device.

Labeling Formats

5. To be defined by Owner prior to construction following practice for all campus Security System installations.

3.6 SYSTEM TESTING AND ACCEPTANCE

System shall be complete and fully operational before requesting final acceptance and scheduling system Integration into the Campus VMS.

Installation of all field devices will be inspected by Owner or Owner's representative. Inspection will consider overall neatness and quality of installation, functionality of each individual device, mounting, wiring and labeling.

Conduct a seven-day burn-in test. Intent of burn-in test shall be to prove System by placing it in near real operating conditions prior to connection to Campus VMS.

1. During this period System shall be fully functional and programmed so that all points, controls, messages, prompts, etc. can be exercised and validated.

Provide written notification to Owner that system is completely installed, integrated, burn-in testing completed and is fully functional as specified herein.

2. Submit schedule for acceptance testing. Representatives of Owner, UKPD and/or representative may witness test procedures.
3. Notify Owner UKPD and the representative in writing a minimum of two weeks in advance to allow for such participation.
4. Describe test procedures prior to testing and submit sample test form to Owner / Representative.

Prior to final acceptance test, equipment rooms and similar areas should be free of accumulation of waste materials or rubbish caused by operations under Contract.

Equipment shall be on and fully operational during any and all testing procedures.

5. Provide all personnel, equipment, and supplies necessary to perform site testing.
6. Supply a form of communication with remote parties in the team for use during test.
7. A manufacturer's representative shall be present on site to answer any questions that may be
beyond technical capability of Contractor's employees, if Contractor so elects or by specific request of Representative Owner, at no charge to Representative or Owner.

During course of final acceptance test, Contractor shall be responsible for demonstrating that, without exception, provided VMS complies with contract requirements.

Testing shall include but not be limited to:

8. Continuity and conductor/connector integrity on all cables.
9. Demonstrate functionality of all cameras including:
    a. Owner-acceptable field of view.
    b. Response to alarms.
    c. Response to Access Control System inputs.
10. Confirm remote viewing, configuration and camera control via Browser and in the UKPD Operations Center. Confirm all Analytic uses on Cameras programmed for Analytic use.
    a. Confirm system rights settings for authorized users.
11. Demonstrate storage and retrieval of recorded video by date/time.

Owner retains the right to suspend and/or terminate testing at any time when system fails to perform as specified.

12. In event it becomes necessary to suspend test, Contractor shall work diligently to complete / repair all outstanding items to condition specified in Specification and as indicated on Security Drawings.
13. All of Owner's / Representative Fees and expenses related to suspended test will be deducted from Contractor's retainage.
14. Contractor shall supply Owner with a detailed completion schedule outlining phase by phase completion dates and a tentative date for a subsequent punch list retest.
15. During final acceptance test, no adjustments, repairs or modifications to system will be conducted without permission of Owner.

Upon successful completion of final acceptance test (or subsequent punch list retest) Owner or Representative will issue a letter of final acceptance.

Records of Test Results shall be included in System Documentation and submitted as detailed below.

3.7 OWNER TRAINING

Training course for system covered in this section shall be a minimum of 6-hours.

Maximum number of students to be (6).

1. Training materials shall be provided to all students.

Record, label, and catalog all training on DVD Videodiscs. Provide discs to Owner for future in-house training sessions and / or reviews. Furnish all temporary equipment necessary for taping all training sessions. Maintain accurate and up-to-date time sheets of all training sessions.

Contractor shall be on call during Warranty period to answer any questions Owner might have. The Owner reserves the right to use any excess training hours, not used by time of system completion, for future training as requested by Owner until total number of training hours has been completed.

3.8 DOCUMENTATION

All Owners manuals and or maintenance information shall be provided in printed form as well as electronic PDF format to the owner and owner representative.

3.9 WARRANTY AND SUPPORT

Unless otherwise noted, Contractor shall guarantee all materials, equipment, etc., two (2) years from date of final Owner acceptance of system. This guarantee shall include all labor, material and travel time.

Contractor/Integrator and/or manufacturer(s) of system equipment must offer:

1. Technical Support Capabilities (Technician onsite) response time onsite within 4 hours, 24-hours/7-days per week (“24/7”), and 365 days per year.
2. 24-hour turn-around (from receipt of item) for Repair or Replacement of failed components, 7-days per week.

END OF SECTION 28 2300

SECTION 28 3100 - FIRE ALARM SYSTEM

PART 1 - GENERAL

1.1 RELATED DOCUMENTS

A. Drawings and general provisions of the Contract, including General, Special and Supplementary Conditions and Division 01 Specification Sections, apply to this Section.

B. The Contractor is directed to examine each and every section of these specifications, all drawings relating to the Contract Documents, any and all Addenda, etc., for work described elsewhere that may relate to the provision of the work described herein. Materials and performance requirements are specified elsewhere herein that relate to these systems.

C. Each Contractor's attention is directed to Section 280501 - General Provisions, Communications, and all other Contract Documents as they apply to his work.

1.2 SCOPE OF WORK

A. The work covered by and the intent of this section of the specifications includes the furnishing of all labor, equipment, materials, testing, programming and performance of all operations in connection with the expansion of the building Fire Alarm System as shown on the drawings, as herein specified and as required by the applicable codes and published University of Kentucky Standards. This project is an addition to the existing Simplex system and shall utilize components UL listed to be compatible with the existing equipment.

B. The requirements of all other applicable conditions of the Contract, Supplementary Conditions and General Requirements, apply to the work specified in this section.

C. The complete installation shall conform to the applicable sections of KBC 909.8, NFPA-71, NFPA-72A, B, C, D, NFPA 92 & 92B, Local Code Requirements and National Electrical Code (Article 760). The requirements of any local fire department and the Authority Having Jurisdiction shall also be observed in the system installation and device layout.

D. The work included in this section shall be coordinated with related work specified elsewhere in these specifications.

E. This system shall provide mass notification and smoke evaluation functions in addition to typical fire alarm functions. Provide a UL 864 listed controls system for the smoke control systems. All applicable components controlling these systems shall be UL listed for use in smoke control applications.

F. Furnish and install a complete digital multiplex Fire Alarm System as described herein and as shown on the plans; to be wired, connected, completely tested, and left in first class operating condition. The system shall use individually-addressable digital multiplex device circuit(s) with individual device supervision, appliance circuit supervision, incoming normal and stand-by power supervision. In general, systems shall include a control panel, manual pull stations, automatic fire detectors, horns, flashing lights, annunciator (if indicated), interface with campus notification system, raceways, all wiring, connections to devices, connections to valve tamper switches, water flow switches and mechanical controls, outlet boxes, junction boxes, and all other necessary materials for a complete, operating system. All hardware, software, programming, devices and connections to the campus central monitoring system shall be provided under this contract. All functions available at the central monitoring station shall be included.

G. The fire alarm control panel shall allow for loading or editing of any special instructions or operating sequences as required. No special tools, modems, or an off-board programmer shall be required to program the system to facilitate future system expansion, building parameter changes, or changes as required by local codes. All instructions shall be stored in a resident non-volatile programmable memory.

H. All panels and peripheral devices shall be the standard product of a single manufacturer and shall display the manufacturer's name of each component. Any catalog numbers specified under this section are intended only to identify the type, quality of design, materials, and operating features desired.

I. Equipment submissions for shop drawing review must include a minimum of the following:

1. Complete descriptive data indicating UL listing for all system components.
2. Complete sequence of operations of the system.
3. Complete system wiring diagrams for components capable of being connected to the system and interfaces to equipment supplied by others.
4. A copy of any state or local Fire Alarm System equipment approvals.
5. An AutoCAD (latest version) produced wiring diagram illustrating the basic floor plan of the building, showing all system wiring and equipment, as well as zoning boundaries and schedule of zone legends as intended to appear on annunciators. Provide three electronic copies of as-built drawings and all system operational software at close of project, to be included in operation and maintenance manuals.

J. No work shall be done until the drawings are approved by the Kentucky Department of Housing, Buildings and Construction.

1.3 ACTION SUBMITTALS

A. Product Data: For each type of product indicated.

B. Shop Drawings: For fire-alarm system. Include plans, elevations, sections, details, and attachments to other work.

1. Comply with recommendations in the "Documentation" Section of the "Fundamentals of Fire Alarm Systems" Chapter in NFPA 72.
2. Include voltage drop calculations for notification appliance circuits.
3. Include battery-size calculations.
4. Include performance parameters and installation details for each detector, verifying that each detector is listed for complete range of air velocity, temperature, and humidity possible when air-handling system is operating.
5. Include plans, sections, and elevations of heating, ventilating, and air-conditioning ducts, drawn to scale and coordinating installation of duct smoke detectors and access to them. Show critical dimensions that relate to placement and support of sampling tubes, detector housing, and remote status and alarm indicators. Locate detectors according to manufacturer's written recommendations.
6. Include voice/alarm signaling-service equipment rack or console layout, grounding schematic, amplifier power calculation, and single-line connection diagram.
7. Include floor plans to indicate final outlet locations showing address of each addressable device. Show size and route of cable and conduits.

C. General Submittal Requirements:

1. Submittals shall be approved by authorities having jurisdiction prior to submitting them to Architect.
2. Shop Drawings shall be prepared by persons with the following qualifications:

a. Trained and certified by manufacturer in fire-alarm system design.
b. NICET-certified fire-alarm technician, Level IV minimum.
c. Licensed or certified by authorities having jurisdiction.

D. Delegated-Design Submittal: For smoke and heat detectors indicated to comply with performance requirements and design criteria, including analysis data signed and sealed by the qualified professional engineer responsible for their preparation.

1. Drawings showing the location of each smoke and heat detector, ratings of each, and installation details as needed to comply with listing conditions of the detector.

2. Design Calculations: Calculate requirements for selecting the spacing and sensitivity of detection, complying with NFPA 72.

1.4 INFORMATIONAL SUBMITTALS

A. Qualification Data: For qualified Installer.

B. Field quality-control reports.

1.5 CLOSEOUT SUBMITTALS

A. Operation and Maintenance Data: For fire-alarm systems and components to include in emergency, operation, and maintenance manuals. Deliver copies to authorities having jurisdiction and include the following:

1. Comply with the "Records" Section of the "Inspection, Testing and Maintenance" Chapter in NFPA 72.
2. Provide "Record of Completion Documents" according to NFPA 72 article "Permanent Records" in the "Records" Section of the "Inspection, Testing and Maintenance" Chapter.
3. Record copy of site-specific software.
4. Provide "Maintenance, Inspection and Testing Records" according to NFPA 72 article of the same name and include the following:

a. Frequency of testing of installed components.
b. Frequency of inspection of installed components.
c. Requirements and recommendations related to results of maintenance.
d. Manufacturer's user training manuals.

5. Manufacturer's required maintenance related to system warranty requirements.
6. Abbreviated operating instructions for mounting at fire-alarm control unit.

B. Software and Firmware Operational Documentation:

1. Software operating and upgrade manuals.
2. Program Software Backup: On magnetic media or compact disk, complete with data files.
3. Device address list.
4. Printout of software application and graphic screens.

1.6 MAINTENANCE MATERIAL SUBMITTALS

A. Furnish extra materials that match products installed and that are packaged with protective covering for storage and identified with labels describing contents.

1. Lamps for Remote Indicating Lamp Units: Quantity equal to 10 percent of amount installed, but no fewer than 1 unit.
2. Lamps for Strobe Units: Quantity equal to 10 percent of amount installed, but no fewer than 1 unit.
3. Smoke Detectors: Quantity equal to 10 percent of amount installed, but no fewer than 1 unit.
4. Detector Bases: Quantity equal to 2 percent of amount installed, but no fewer than 1 unit.
5. Keys and Tools: One extra set for access to locked and tamperproofed components.
6. Audible and Visual Notification Appliances: Ten (10) of each type installed.
7. Fuses: Two of each type installed in the system.

1.7 QUALITY ASSURANCE

A. Installer Qualifications: Personnel shall be trained and certified by manufacturer for installation of units required for this Project.

B. Installer Qualifications: Installation shall be by personnel certified by NICET as fire-alarm Level IV technician.

C. Source Limitations for Fire-Alarm System and Components: Obtain fire-alarm system from single source from single manufacturer.

D. Electrical Components, Devices, and Accessories: Listed and labeled as defined in NFPA 70, by a qualified testing agency, and marked for intended location and application.

E. Every component, device, transmitter, software, etc., that are included in the work, to make up a complete Fire Alarm System shall be listed as a product by the manufacturer under the appropriate category by the Underwriters' Laboratories, Inc. (UL), and shall bear the "U.L." label.

F. The system power, signal and controls wiring shall be UL listed for Power Limited Applications per

G. NEC 760. All circuits shall be marked in accordance with NEC Article 760.

H. The fire alarm system shall be manufactured by Simplex, Siemens, or Honeywell Notifier only.

I. Major equipment and system startup and operational tests shall be scheduled and documented in accordance with Section 019113 Commissioning.

1.8 WARRANTIES

A. The Contractor shall unconditionally guarantee (except for vandalism) the completed fire alarm system wiring and equipment to be free from inherent mechanical, software and electrical defects for a period of one (1) year from the date of Owner's acceptance.

B. The equipment manufacturer shall make available to the Owner a maintenance contract proposal to provide a minimum of two inspections and tests per year in compliance with NFPA-72H and NFPA-92B guidelines.

C. INSTALLATION WARRANTY. The Contractor shall warrant the cabling system unconditionally against defects in workmanship for a period of one year from the date of system acceptance. The warranty shall cover all labor and materials necessary to correct a failed portion of the system and to demonstrate performance within the original installation specifications after repairs are accomplished. Replacement of faulty materials and the cost of labor to make the replacement shall be the responsibility of the Contractor.

D. The equipment items shall be supported by service organizations which are reasonably convenient (less than 100 miles from project site) to the equipment installation in order to render satisfactory service to the equipment on a regular and emergency basis during the warranty period of the contract.

E. The Warranty specified in this Article shall not deprive the Owner of other rights the Owner may have under provisions of the Contract Documents and shall be in addition to, and run concurrently with other warranties made by the Contractor under requirements of the Contract Documents.

PART 2 - PRODUCTS

2.1 OPERATION

A. The system alarm operation subsequent to the alarm activation of any manual station, automatic detection device, or sprinkler flow switch shall be as follows:

1. The appropriate initiating device circuit indicator (red color) shall flash on the control panel until the alarm has been silenced at the control panel. Once silenced, this same indicator shall latch on. A subsequent alarm received after silencing shall flash the subsequent zone alarm indicator on the control panel and resound alarms and flashing signals. These same conditions shall occur at any remote annunciator.
2. A pulsing alarm tone shall occur within the control panel until silenced.

3. All alarm indicating appliances shall sound in a temporal code pattern until silenced by an alarm silence switch at the control panel (or the remote annunciator, if any).
4. All doors normally held open by door control devices shall close. Doors shall also be released in the event of incoming normal power failure.
5. A supervised signal to notify the local fire department or an approved central station (as required by local codes) shall be activated.
6. A supervised signal sent to the mechanical control system(s) shall activate, shut down or reconfigure the air handling systems as required by NFPA or as otherwise indicated herein. Provide necessary interlock wiring as required to control mechanical equipment.
7. The Contractors shall coordinate with each other as necessary to provide all required auxiliary contacts, DDC systems interfaces, equipment, etc., as needed to shut down or otherwise control air handling systems per NFPA and all applicable codes.
8. The system shall be wired with two circuits to all Notification devices so that when an alarm is acknowledged, silencing the audibles, the visual units shall continue in operation until the main control panel has been reset. If local codes require other than this arrangement, the system shall be wired in accordance with the code that is applicable.

B. The alarm indicating appliances shall be capable of being silenced only by authorized personnel operating the alarm silence switch at the main control panel or by use of a similar key operated switch at the remote annunciator (where remote units are provided). A subsequent alarm shall reactivate the signals. Operation of the alarm silence switch shall be indicated by trouble light and audible signal.

C. The alarm activation of any elevator lobby shaft, pit or equipment room smoke detector shall, in addition to the operations listed above, cause the elevator cabs to be recalled according to the following sequence:

1. If the alarmed detector is in any location or on any floor other than the main level of egress, the elevator cars shall be recalled to the main level of egress.
2. If the alarmed detector is on the main egress level elevator lobby, the elevator cabs shall be recalled to the pre-determined alternate recall level.
3. Provide auxiliary contacts within the base of each elevator lobby smoke detector, with each separate landing to be wired back separately to the elevator controller. Coordinate all equipment terminations and sequence of operation with the elevator installer. The use of digital to analog controllers to accomplish this function will be acceptable, if in compliance with codes.

D. The activation of any standpipe water valve tamper switch or sprinkler zone valve tamper switch shall activate a distinctive system supervisory audible signal and illuminate a "Sprinkler Supervisory Tamper Switch" indicator at the system controls (and the remote annunciators). There shall be a distinction in the audible trouble signals between valve tamper switch activation and opens or grounds on fire alarm circuit wiring.

1. Activating the trouble silence switch will silence the supervisory audible signal while maintaining the "Sprinkler Supervisory Tamper" indicator showing the tamper contact is still activated.
2. Restoring the valve to the normal position shall cause the audible signal and visual indicator to pulse at a fixed rate.
3. Activating the trouble silence switch shall silence the supervisory audible signal and restore the system to normal.

E. The activation of the campus or local mass notification system shall cause all building notification strobes to flash and shall broadcast the emergency message via all building fire alarm speakers.

F. The alarm activation of any duct mounted smoke detector shall cause the control panel to indicate and report a supervisory trouble only. It shall not sound the general building alarm. It shall initiate an HVAC system shutdown as described above.

G. Include with the control panel, as an auxiliary function, a built-in test mode that, when activated, will cause the following operation sequence:

1. The city connection circuit shall be disconnected.
2. Control relay functions shall be bypassed.
3. The control panel shall show a trouble condition.
4. The panel shall automatically reset itself.
5. Any momentary opening of an initiating or indicating appliance circuit shall cause the audible signals to sound for a minimum of two seconds to indicate the trouble condition.

H. A manual evacuation switch shall be provided to operate the system indicating appliances and/or initiate "Drill" procedures.

I. Activation of an auxiliary bypass switch shall override the automatic functions either selectively or throughout the system and initiate a trouble condition at the control panel.

J. Include any and all detection equipment and interface relays as required to provide a 100% code approved and supervised pre-action Fire Suppression system. Coordinate with the Fire Protection installer as required.

K. Mass Notification: Receipt of an IP-based multicast message from the campus Single wire InformaCast System shall activate all speakers in the facility and broadcast the delivered voice message. Live voice messages will also be delivered in activation of the mass notification microphones located at the fire alarm control panel and fire alarm annunciator panels.

L. Smoke Evacuation: Manual operation of activation of any designated smoke detector shall initiate the smoke evacuation system.

1. Open all electrically operated vestibule doors
2. Start all smoke evaluation fans
3. Send an inhibit signal to the stand by automatic transfer switch to remove non-essential loads from the generator. Signal shall not include any intentional delay.

M. Fire Pump Monitoring: System shall monitor the status of the fire pump controller. When fire pump is connected to generator power and the controller is calling for the pump to fun – the fire alarm shall send an inhibit signal to the stand by automatic transfer switch to remove non-essential loads from the generator. Signal shall not include any intentional delay.

2.2 SUPERVISION

A. The system shall contain Class "B" (Style "B") independently supervised initiation circuits as required for the zoning indicated. Circuits shall be arranged so that a fault in any one zone shall not affect any other zone. The alarm activation of any initiation circuit shall not prevent the subsequent alarm operation of any other initiation circuit.

B. There shall be supervisory initiation circuit(s), as required, for connection of all sprinkler valve tamper switches. Wiring methods which require any fire alarm initiation circuits to perform this function shall be deemed unacceptable; i.e., sprinkler and standpipe tamper switches (N/C contacts) shall NOT be connected to circuits with fire alarm initiation devices (N/O contacts). These independent initiation circuit(s) shall be each labeled "Sprinkler Supervisory Tamper Switch" and shall differentiate between tamper switch activation and wiring faults. Provide individual annunciation for the main post indicator valve and each tamper switch as indicated by the zoning schedule on the plans or as otherwise required by codes. For these circuits and all exterior underground copper circuit wiring, provide proper surge suppression and protection for circuit.

C. There shall be independently supervised and independently fused indicating appliance circuits as required for alarm audible signals and flashing alarm lamps.

D. All auxiliary manual controls shall be supervised so that all switches must be returned to the normal (automatic) position to clear system trouble.

E. Each independently supervised circuit shall include a discrete (amber color) "Trouble" indicator to indicate disarrangement conditions, per each circuit.

F. The incoming power to the system shall be supervised so that any power failure shall be audibly and visually indicated at the control panel and the annunciator. A green color "power on" indicator shall be displayed continuously while incoming power is present.

G. The system batteries shall be lead-acid type, supervised so that disconnection or failure of a battery shall be audibly and visually indicated at the control panel (and the annunciator).

H. Wiring to a remote annunciator (if provided for system) shall be supervised for open and ground conditions. An independent annunciator trouble indicator shall be activated and an audible trouble signal shall sound at the control panel.

2.3 MONITORING

A. The University of Kentucky utilizes an offsite monitoring service for code required monitoring. This Contract is currently held by Simplex-Grinnell. The University also utilizes a Simplex TrueSite Workstation (TSW) for informational purposes only. The fire alarm system installed in this project shall provide monitoring capability to both. Non-Simplex manufacturers shall provide a dedicated dialer to contact the offsite monitoring service and an external Simplex serial DACT to interface with the TSW via the campus monitoring loop. All interior communication lines necessary for this implementation shall be included. The DACT shall transmit general trouble, supervisory and alarm conditions at a minimum.

B. Provide addressable output relays to report status of the smoke control system to the Building Management System. Provide relays to indicate smoke fan running (5 each) and smoke fan fault (5 each).

C. The control panel shall be equipped with a network connection or communications interface for the campus-wide central monitoring system as required. Provide all hardware, software, programming, devices and connections to the campus central monitoring system as required to activate all functions available at the central monitoring station. Primary and secondary communication channels shall be provided per Code.

2.4 GRAPHIC ANNUNCIATOR

A. The existing building map/graphic annunciator shall be updated to reflect this building addition. All information presented by the existing graphic shall also be displayed for this addition. The contractor shall utilize the existing graphic enclosure and provide a new display as required. All modifications shall be approved by the Owner.

2.5 POWER REQUIREMENTS

A. The control panel shall receive 120 VAC power via a dedicated circuit. The incoming circuit shall have suitable overcurrent protection within the control panel, as well as at the circuit source. If additional circuits are required for this or other control units, they shall be provided by the Contractor.

B. If the facility is equipped with an emergency standby power generator, the fire alarm equipment shall be connected to this system, per N.E.C.

C. The system control panel and auxiliary equipment, such as power supplies shall be provided with sufficient battery capacity to operate the entire system upon loss of normal 120 VAC power in a normal supervisory mode for a period of time as required by codes for the building occupancy. There shall be reserve battery capacity to drive all alarm appliances for five minute indication at the end of this period. The system shall automatically transfer to the standby batteries upon power failure. All battery charging and recharging operating shall be automatic. Batteries, once discharged, shall recharge at a rate that will provide a minimum of 70% capacity in 12 hours, or sooner if required by codes.

D. All circuits requiring system operating power shall be 24 VDC and shall be individually fused at the control panel.

E. Power supplies for Notification signals, whether in the main panel or within remote power supply cabinets, shall be designed to provide a minimum of 20% spare capacity for future signals.

2.6 PERIPHERAL DEVICES

A. Note: On fully digital multiplex systems, provide addressable devices, bases or modules for devices listed herein. Each device shall be an individual address on the system. Addressable bases or modules shall be UL listed for the device served.

B. MANUAL PULL STATION: Manual stations shall be double action and shall be constructed of high impact, red lexan or cast metal with raised white lettering and a smooth high gloss finish. The manual pull station shall have a hinged front with key lock. Stations shall be keyed alike with the fire alarm control panel. When the station is operated, the handle shall lock open in a protruding manner. Furnish one key for each manual station to owner at close of project, during instruction period. Install within 60" of each exit, per code, whether indicated on the drawings or not.

C. CEILING-MOUNTED SMOKE DETECTORS, PHOTOELECTRIC TYPE

1. Furnish and install where indicated on the plans or required, ceiling-mounted smoke detectors. Provide separate outlet-box mounted base with auxiliary relay, or standard base, as required.
2. Smoke Detectors shall be listed to U.L. Standard 268 and shall be compatible with their control equipment. Detectors shall be listed for this purpose by Underwriters' Laboratories, Inc. The detectors shall obtain their operating power from the fire alarm panel supervised detection loop. Loss of the operating voltage shall interrupt the supervisory circuit of the fire alarm detection loop and cause a trouble signal to be generated at the control panel. Detectors shall be capable of being reset at the main control panel.
3. No radioactive materials shall be used. Detector construction shall provide mounting base with twist-lock detector head. Contacts between the base and head shall be of the bifurcated type using spring-type, self-cleaning contacts. Removal of the detector head shall interrupt the supervisory circuit of the fire alarm detection loop and cause a trouble signal at the control panel. Detector design shall provide full solid state construction, and compatibility with other normally open fire alarm detection loop devices such as heat detectors, pull stations, etc.
4. To minimize nuisance alarms, voltage and RF transient problems, suppression techniques shall be employed as well as a smoke verification circuit and an insect screen. The detector head shall be easily disassembled to facilitate cleaning.
5. Remote LED alarm indicators shall be installed where required.
6. Smoke detectors (and all other system electronics) shall be shielded to protect circuitry from EMI problems generated by power fields, cellular phones, etc.
7. Special Note: The Contractor installing smoke detectors shall use care in the final positioning of all devices. They shall not be installed closer than 36" from an air diffuser or return grille, closer than 24" from a ceiling/wall intersection, or similar location that would diminish detector performance. Refer to and comply with NFPA 72E, "Standard On Automatic Fire Detectors".
8. Provide smoke detector at each fire alarm system control component, as required by code.

D. AUDIBLE UNITS

1. Audible signals shall be delivered by speaker. Each audible assembly shall include separate wire leads for in/out wiring for each leg of the associated signal circuit. T-tapping of signal device conductors to signal circuit conductors will not be accepted. Each audible device shall produce a minimum sound pressure level of 92db at 36" on axis. Locate as indicated or required. All audible tones for same function shall be identical, per NFPA. Provide sufficient audible units to comply with code for required coverage and voice intelligibility. Provide temporal coded signals.

2. Audible units and visual units shall be wired to separate Notification circuits, allowing for silencing of audibles with alarm acknowledgment, continuing operation of strobes until system reset. Addressable devices may be used to fulfill this requirement.

E. VISUAL UNITS

1. Stand-alone visual indicating units shall be xenon type strobe matching audio-visual units. These devices shall be UL listed and be or wall mounted. A high-impact clear lens shall project out from backplate for fire notification. Lettering, if any, shall be oriented upright to the standing viewer. Candela output values of all visual units shall be selected for the covered spaces geometry and size, complying with ADA and NFPA.
2. Provide system-wide synchronization of all visual devices, so that all strobes flash at the same rate and at the same time, complying with ADA.
3. Dual Fire Alert Strobe Devices
   a. The unit shall be complete with a tamper resistant lexan lens with “FIRE” lettering and clear lense for the fire alarm signal. Mount the fire alarm devices on the wall at no less than 80” AFF. “ALERT” lettering shall appear on the amber colored lens of the strobe designated for the emergency alert system. The Alert strobe shall be just above the fire strobe in the same enclosure for new installations. For existing installations install the alert strobe next to the existing fire strobe on the wall surface mounted.
   b. All strobes shall be addressable, ADA approved and capable of a flash at the required synchronized 1 flash per second. Xenon strobe shall provide 4-wire connection to insure properly supervised in/out system connection. Unit shall be complete with all mounting hardware including back box. Audio/visual unit shall be UL listed for its intended purpose. Provide amber lenses for the alert devices.

F. DUCT SMOKE DETECTORS

1. Duct smoke detectors shall be of the solid state photoelectric type, operating on the light scattering photodiode principle. The detectors shall ignore invisible airborne particles or smoke densities that are below the set alarm point. No radioactive materials shall be used. The basic construction of duct smoke detectors shall be the same as that previously described for ceiling-mounted smoke detectors. Duct housing couplings shall be slotted to insure proper alignment of the sampling and exhaust tubes. Detector shall have an alarm status LED visible through a transparent cover, panel or in housing.
2. The Contractor shall furnish air duct smoke detectors with template to the sheetmetal or air handling unit installer for installation. Coordinate length of sampling probe required and furnish appropriate length. Probe tube shall be located in accord with manufacturer's recommendations, to give maximum sampling rate of airflow. Provide multiple detectors, as required, if a single device will not provide adequate sensing due to duct size or air velocity. Wire multiple detectors on a single air handling system as a single zone or address unless otherwise required by prevailing codes. Field verify quantity of detectors needed to provide NFPA-compliant coverage of the air handling unit and provide as required.
3. Detector supervised power and alarm wiring (from F.A. control panel) is to be provided by the Contractor. Interlock wiring from auxiliary contacts to stop or otherwise control air handling unit fan motor(s) is to be provided by the Contractor. Provide auxiliary contacts as required. Zone wiring and indication for air duct smoke detectors shall be maintained separate from area detection devices. Detector shall be capable of being reset at the main control panel, and at a local test/reset station.
4. Where air duct smoke detectors are located in other than Mechanical Rooms or in spaces not easily visible, a remote alarm/power indicating LED key reset station shall be installed. These remotes shall be ganged together, if required, and labeled accurately as to which unit is reporting an alarm condition.
5. Where air duct smoke detectors are indicated to be furnished at concealed air handling units above ceilings or smoke damper locations, furnish as outlined above. Also provide

remote indicating alarm LED flush in corridor wall at 7'-0" A.F.F. immediately below installation, or as close as practical to installation. The Contractor is to provide control wiring, E.P. switches, etc., as required to operate smoke dampers, as well as the required operating circuit. Coordinate all requirements with the installer of smoke dampers.

6. Ionization - type detectors shall not be utilized for air duct smoke detection.
7. All air duct smoke detector installations and materials shall be in accord with U.L., NFPA, and any other applicable codes.

G. BEAM DETECTORS

1. Beam detectors shall be of the photoelectric type with infrared light source. UL lighted to Standard 268. Construct with coded signal to eliminate interference from artificial and natural lighting.
2. Detectors shall have adjustable delay and at least 8 sensitivity settings. Detector shall produce a trouble signal if observation is 50% or higher.
3. Provide remote indicator and test point mounted in an accessible area within view of the detectors.

H. BEAM DETECTION SYSTEM

1. An open-area smoke imaging detection system will be installed for protection of nominated areas on the floor plans. The system will actively measure the attenuation in these areas and be able to distinguish between smoke, intruding objects (e.g. obstructions, insects), and non-smoke particles (e.g. dust). The detector will have at least two beams with different wavelengths. The system will have high alignment tolerances that enable it to compensate for natural shifts in the building structure and be easily installed and maintained.
2. The system shall consist of receiving (Imager) and emitting (Emitters) components for installation along the perimeter of the protected space. It shall use dual wavelength imaging principles to determine the smoke obscuration at known locations, while providing a high resistance to false alarms and obstructions. Intruding objects that sufficiently reduce the ability of the system to measure smoke obscuration will be identified as a Trouble (Fault).
3. Imagers
   a. The system will be primarily configured through DIP switches located on the Imager that allow for a number of settings to provide the best possible parameters for the particular site in which it will be installed.
   b. The parameters will be at least:
      1) 3 sensitivity settings for fire alarm threshold
      2) Selection for particle size discrimination (dust rejection on or off)
      3) Alarm latching or non-latching.
   c. Different Imagers will be available for covering different horizontal viewing angles.
   d. This set-up will allow installing Emitters on different heights and as such providing an optimum 3D coverage of the area.
   e. The Imager shall be powered from an external power supply at a nominal value of 24 VDC.
   f. The imager will have an on-board memory for diagnostic purposes of minimum 10.000 events.
4. Emitters
   a. The Emitters shall be powered from an external power supply.
   b. When choosing the external power supply, the nominal value will be 24 VDC.
   c. The system designer shall have a choice between Emitters with two intensities, for long range or short range coverage.

d. The Emitters shall activate automatically once aligned and their position fixed and secured.

5. Signal Annunciation, Inputs and Outputs

a. Locations of alarms and troubles (faults) shall be identified through the user interface.
b. It will be possible to remotely reset the unit by applying or removing 24 VDC to/from a dedicated input.
c. There will be a choice between automatic reset and manual reset. Faults always reset automatically when the fault has disappeared.
d. There will be an initiating device circuit (IDC) interface, C/O contacts, to report Alarms and Trouble (Fault) to connected four-wire control panels.
e. A connection to a remote indicator (remote LED) shall be provided, which will activate when a Fire alarm is initiated.
f. Optional equipment may be installed to provide addressability to a third-party control panel. Such installations must comply with the control panel manufacturer's specifications.

6. The Detection system

a. The contractor shall install the system in accordance with the manufacturer's Product Guide.

7. Environmental

a. The units will have an IP44 rating for the Electronics and IP66 rating for the optics enclosure. The system will be able to operate at an ambient temperature range of at least -10°C to 55°C (14°F to 131°F) at a maximum relative humidity 90% (non-condensing).

8. Alignment

a. Both Imager and Emitter will be constructed in such a way that they can be simply rotated left, right, up and down and easily aligned and secured by the use of a simple tool, i.e. a laser screwdriver.
b. It will be possible to install and align Imagers and Emitters by a single person.

9. Building Flex

a. The system will tolerate building flex up to at least 2° in all directions.

10. Maintenance

a. The system shall be highly resistant to dirt and dust and auto-adjust.
b. Maintenance will be limited to clean the Imager and Emitter front by wiping the optical surface with a dry cloth.

11. Testing

a. Optical filters shall be available from acceptable manufacturers that enable a calibrated test to be performed.

12. Acceptable Manufacturers: Xtralis OSID or approved equal.

I. DOOR HARDWARE

1. Door holders shall be FM 998 approved.
2. All door hardware shall be Yale, Von Duprin or Dorma and door keying shall be compatible with the UK Yale or Best master keying system.
3. Install a smoke detector on each side of any door equipped with a hold open device.

J. END OF LINE RESISTOR

1. End-of-line devices (if required) shall be flush-mounted, located at 7'-0" A.F.F. in corridor walls or as indicated.

K. REMOTE POWER SUPPLY UNITS FOR PERIPHERAL

1. Provide remote power supply(ies) as required for proper system operation.
2. Remote power supplies shall be provided with local intelligence compatible with the digital multiplex network, so they have a unique address, providing the ability to monitor the supply for loss of power, shorts, grounds and other supervisory functions.
3. Where required by the fire alarm system manufacturer, remote power supplies shall be provided that will provide sufficient current to drive audio/visual or other required devices.
4. These units shall be located in electrical closets, mechanical rooms or similar spaces. They shall not be installed in finished areas, storage rooms, etc., without the permission of the Engineer. All locations shall be indicated on the shop drawing submissions.
5. Provide dedicated 120 volt power circuit(s) from nearby panelboards as required, whether indicated on the plans or not.

PART 3 - INSTALLATION

3.1 Provide and install the system in accordance with the plans and specifications, all applicable codes and the manufacturer's recommendations. All wiring shall be in a completely separate conduit system from power wiring or other raceway systems. Minimum conduit size shall be 3/4" trade size. Maximum wire fill shall be 40%, for any raceway system.

3.2 All junction boxes shall have coverplates painted red and labeled "Fire Alarm". A consistent wiring color code shall be maintained throughout the installation. The number of wiring splices shall be minimized throughout. Excessive wire splicing (as determined by the Engineer), shall be cause for rejection of the work.

3.3 All conductive cabling associated with this system that extends beyond the building envelope shall be provided with surge suppression. Suppression installed shall be approved by the fire alarm equipment manufacturer and in accordance with Division 26 specifications.

3.4 Installation of equipment and devices that pertain to other work in the contract shall be closely coordinated with the appropriate tradesmen or other contractors.

3.5 The Contractor shall clean all dirt and debris from the inside and the outside of the fire alarm equipment after completion of installation.

3.6 The manufacturer's authorized representative shall provide on-site supervision of installation, and shall perform the initial "power-up" of the system after he has thoroughly checked the installation.

3.7 Operation and maintenance manuals submitted for this project shall list names, license numbers, and telephone numbers of at least two installers that are employed full time by the supplier/manufacturer to install and test fire alarm systems in the installation location.

3.8 A floor plan drawing indicating fire alarm devices and wiring only, shall be provided by the manufacturing company for job site use. These drawings shall be approved by the State Fire Marshal's Office or Local Authority Having Jurisdiction, as appropriate and in accord with code requirements. A copy of this drawing shall be submitted to the Engineer for his review, approval and project records.

3.9 WIRING LEGEND

A.

CIRCUITS (Unless Otherwise Specified or Required by Equipment)	WIRE SIZE-AWG	WIRE COLOR	EOL Value
ALARM CIRCUITS WIRES Stations Smoke Detectors Heat Detectors	# 18	ORANGE(pos.) BLUE(negative)	3.3KOHM

Waterflow Switch
Tamper Switch-Trouble Only

TROUBLE CIRCUIT WIRING	# 18	BROWN	
COMMON ANNUNCIATOR WIRES	# 18	VIOLET	
POINT ANNUNCIATOR WIRES	# 18	PINK WITH BRADY TAG	
120VAC WIRING	# 12	BLACK WHITE (Neutral)	
24VDC	# 14	RED (Positive) BLACK (Negative)	
PARALLEL SIGNAL WIRES	# 14	RED (Positive) BLACK (Negative)	15K OHM
SERIES SIGNAL WIRES	# 14	YELLOW	NONE
DOOR HOLDER	# 14	BLUE WHITE (Neutral)	
FAN SHUT DOWN WIRES	# 14	SELECTED BY CONTRACTOR	
ELEVATOR CONTROL WIRES	# 14	SELECTED BY CONTRACTOR	
TELEPHONE WIRES	# 22	TWISTED/SHIELDED	22K OHM
SPEAKER WIRES	# 18	TWISTED	15K OHM

B. Notes:

1. All wire shall be stranded, tinned copper unless otherwise indicated.
2. All shielding is tinned copper braid with additional aluminum sheath unless otherwise noted.
3. All wiring for data lines and voice risers must be Belden 9574, or an equivalent unless otherwise noted on drawings.

3.10 TESTING

A. Functional Performance Tests: System functional performance testing is part of the Commissioning Process as specified in Section 019113. Functional performance testing shall be performed by the contractor and witnessed and documented by the Commissioning Authority.

B. The completed fire alarm system shall be fully tested in accordance with NFPA-72H and NFPA-92B by the contractor in the presence of the Owner's representative and the Local Fire Marshal. Upon completion of a successful test, the Contractor shall certify the test results in writing to the Fire Marshal, Owner, General Contractor, Architect and Engineer. Provide one week's written advance notice of the test to all concerned parties.

C. All auxiliary devices the fire alarm system is connected to, including tamper switches, flow switches, elevator controls, remote receiving stations, etc., shall be fully tested for proper operation where interfacing with the fire alarm system.

D. Demonstrations and Training: Training of the owner’s operation and maintenance personnel is required in cooperation with the Commissioning Authority. The instruction shall be scheduled in coordination with the Commissioning Authority after submission and approval of formal training plans. Refer to Section 019113 and the Commissioning Plan for further contractor training requirements.

E. The Contractor shall provide a minimum of three hours of instructional time to the Owner in the operation and maintenance of all equipment and components. A receipt shall be obtained from the Owner that this has been accomplished, and a copy forwarded to the Engineer. Provide additional training time if required by the Owner at no charge to the contract or as direct charge to the Owner.

3.11 BUILDING MAP

A. Building map shall be provided adjacent to the main control panel and shall consist of floor plans inked on mylar with color coded zones. Zone indications shall depict the exact zone

number and alphanumerical labeling as shown on the FACP zone labels. Building map shall be a detailed floor plan with all room numbers, fire alarm zones, detectors, horns, alarm initiators, flow switches, sprinkler heads, sprinkler zones, and all other devices shown. "Zone No." shall be in 1/4" high letters. Maps shall be properly oriented and shall be 1/16" = 1' scale or 1/32' = 1' scale with written exception of the owner. Provide durable aluminum frames and all required mounting hardware and mount where indicated on plans. Aluminum frame must be such that it can be removed, disassembled and reassembled to allow replacement or revisions to the mylar. The layers of the map in the frame from back of the frame to the front of the frame shall be as follows:

1. 1/8" Plexiglas
2. White backing mat
3. Pastel backing color layers for zones
4. Inked mylar with floor plan, room #s, fire alarm zones, detectors, horns, alarm initiators, flow switches, sprinkler heads, sprinkler zones, and all other devices.
5. Spacer mat to allow mylar to be suspended from top of frame and reduce washboarding.
6. 1/8" ultraviolet blocking plexiglass
7. 1/8" clear Lexan to prevent scratching

B. Building map(s) shall be installed, complete with "as built" corrections before system is left in operation and before the University will consider the project for substantial completion. Before this systems is left operational and reports to the UK Central Station, this map(s) must be in place.

3.12 WARRANTY

A. The Contractor shall unconditionally guarantee (except for vandalism or misuse) the completed fire alarm system wiring and equipment to be free from inherent mechanical, software and electrical defects for a period of one year from the date of substantial completion.

B. The equipment manufacturer shall make available to the Owner a maintenance contract proposal to provide a minimum of two inspections and tests per year in compliance with NFPA-72H and NFPA-92B guidelines.

END OF SECTION 28 3100

SECTION 312000 - EARTH MOVING

PART 1 GENERAL

1.01 DESCRIPTION

A. Perform earthwork as shown and specified. The work includes:

1. Site excavation, grading and filling to indicated elevations and contours.

2. Subgrade preparation for building foundation, detention basin, sidewalks, curbs and paving.

3. Finish grading.

B. Related Work:

1. Section 030300: Structural Excavation and Backfill

2. Section 329200: Turf and Grasses.

3. Section 334100: Storm Utility Drainage Piping.

1.02 QUALITY ASSURANCE

A. Testing and inspection: Performed by a qualified independent testing laboratory, under the supervision of a registered professional engineer, specializing in geotechnical and soils engineering.

C. Contractor shall provide and pay for testing and inspection during earthwork operations.

D. Materials and methods of construction shall comply with the following standards:

1. Kentucky Department of Transportation Standard Specifications for Road and Bridge Construction, latest edition.
2. American Society for Testing and Materials, (ASTM).
3. American Association of State Highway and Transportation Officials, (AASHTO).
4. National Fire Protection Association, (NFPA).
5. Report of Geotechnical Exploration prepared by Solid Ground Consulting Engineers, PLLC and dated August 13, 2021.

1.03 SUBMITTALS

A. Facilitate and cooperate with Inspection personnel for collection of samples of materials proposed for use.

B. Inspection engineer shall submit reports and certifications for testing and inspection of the following:

1. Proposed off-site fill documenting structural suitability.

2. Compaction operations.

1.04 PROJECT CONDITIONS

A. On behalf of the Owner, S&ME, Inc. prepared the Report of Geotechnical Exploration dated March 2, 2018. This report provides valuable information concerning the site and recommendations for construction. The report is provided as a reference in the Project Manual and all Contractors shall familiarize themselves thoroughly with it in order to fully understand the design intent of the Construction Documents. The Owner, Architect, Landscape Architect, Engineers and Geotechnical Engineer will not be held responsible for interpretations or conclusions drawn by the Contractor based on data in the report. The Contractor shall ask for any ambiguities or discrepancies between the Report and the Construction Documents to be clarified prior to the deadline for final addendum, otherwise it is assumed that the Contractor fully understands the inherent site issues and no claims will be considered.

B. Known underground and surface utility lines are indicated on the drawing. Contractor is responsible for verifying location of existing utilities.

C. Protect existing trees and other features designated to remain as part of the landscaping work.

D. Protect excavations by shoring, bracing, sheeting, underpinning, or other methods, as required to prevent cave-ins or loose dirt from entering excavations. Barricade open excavations and post warning lights at work adjacent to public streets and walks.

E. Underpin adjacent structure(s), including utility service lines, which may be damaged by excavation operations.

F. Promptly repair damage to adjacent facilities caused by earthwork operations. Cost of repair at Contractor's expense.

G. Promptly notify the Architect of unexpected sub-surface conditions.

H. Protect bottoms of excavations and soil beneath and around foundation from frost and freezing.

I. Grade at excavations to prevent surface water draining into excavated areas. Provide ditches or berms to direct surface runoff to locations where it can drain into storm sewer system or be collected and pumped from construction site.

PART 2 PRODUCTS

2.01 MATERIALS

A. All fill material is subject to testing and inspection.

B. Fill materials: Inert subsoil material free of organic matter, rubbish, debris, and rocks greater than 3" diameter and meeting the following requirements:

1. Plasticity index of not more than 30 and liquid limit less than 50 with a maximum dry density (ASTM D698) greater than 98 pcf.

2. Moisture content of compacted fill shall be maintained at plus or minus 2 percent of optimum moisture.

3. Proposed fill material shall be inspected and tested prior to use in the work.

4. Excavated materials (that meet parameters identified above) removed to accommodate new construction may be used as fill material subject to

Geotechnical Engineer's inspection and approval. Excess material and unsuitable material shall be wasted off-site at the Contractor's expense.

C. Granular base: Dense graded aggregate for fill beneath parking lot as noted on plans and details.

D. Granular fill: AASHTO M43, #2, #57 or #9 clean uniformly graded stone or gravel as noted on plans and details.

E. Rip rap: Round carbonate stones or fragmented carbonate rock, dense, sound, and free of cracks or seams, shale, clay, friable materials and debris, placed at thickness indicated on plans. Provide all rip rap materials as required to complete the work.

F. Geotextile filter fabric: KYDOH type IV non-woven soil separator.

G. Silt fence: Propex (formerly Amoco) 2130 or equal.

H. Other materials required for proper completion of work: As selected by Contractor and acceptable to Architect.

PART 3 EXECUTION

3.01 PREPARATION

A. Establish extent of grading and excavation by area and elevation. Designate and identify datum elevation and project engineering reference points. Set required lines, levels, and elevations.

B. Do not cover or enclose work of this Section before obtaining required inspections, tests, approvals, and location recording.

3.02 EXISTING UTILITIES

A. Before starting grading and excavation, establish the location and extent of underground utilities in the work area by contacting utility companies. Exercise care to protect existing utilities during earthwork operations. Perform excavation work near utilities by hand and provide necessary shoring, sheeting, and supports as the work progresses. Damage to utilities will be repaired immediately in a continuous effort until complete at the Contractor's expense.

B. Maintain, protect, relocate, or extend as required existing utility lines to remain which pass through the work area. Pay costs for this work, except as covered by the applicable utility companies.

C. Protect active utility services uncovered by excavation.

D. Remove abandoned utility service lines from areas of excavation. Cap, plug, or seal abandoned lines and identify termination points at grade level with markers.

E. Accurately locate and record abandoned and active utility lines rerouted or extended on project record documents.

3.03 SITE GRADING

A. Perform grading within contract limits, including adjacent transition areas, to subgrade of new elevations, levels, profiles, and contours indicated. Provide subgrade surfaces parallel to finished surface grades. Provide uniform levels and slopes between new elevations and existing grades. Proof roll all subgrades for Geotechnical Engineer to identify any soft areas.

B. Grade surfaces to assure areas drain away from structures and to prevent ponding and pockets of surface drainage. Provide subgrade surfaces free from irregular surface changes and as follows:

1. Rough grading: Plus or minus 0.10 ft. subgrade tolerance. Finish required will be that ordinarily obtained from either blade-grader or scraper operations.

2. Provide subgrade surface free of exposed gravel or stone exceeding 3" in greatest dimension in paved areas or 1" in lawn and planting areas. Areas with concentrated amounts of stone of any size including smaller than 1”, such as stockpile/staging areas, edges of pavement or utility trenches, shall be raked clean of stone prior to placement of topsoil.

3. Paved areas: Shape surface of subgrade areas to line, grade, and cross-section indicated. Provide compacted subgrade suitable to receive paving base materials. Subgrade tolerance plus 0, minus 1/2".

4. Granular base: Grade subgrade surface smooth and even, free of voids to the required subgrade elevation. Provide compacted subgrade suitable to receive granular base materials. Tolerance 1/2" in 10'-0".

C. Grading at existing trees to remain:

1. Perform grading, within branch spread of existing trees to remain, by hand methods to elevations indicated.

2. Cut roots cleanly to depth 3" below proposed finish grade. Coat cut roots with tree paint.

3.04 EXCAVATING

A. Undocumented lean clay fill as identified by the Geotechnical Report shall be excavated and installed in compacted lifts where fill is required. At least 36” of native lean clay or compacted lean clay fill is required beneath subgrade of foundations and floor slab of proposed building. Fat clays shall be excavated so that at least 36” of compacted lean clay or other suitable fill is placed beneath the subgrade of foundations and slab. The silt and fat clay on this site are extremely sensitive to moisture. Exposure of soil to moisture will degrade the structural capabilies. Excavation shall be performed according to weather forecasts, in order to minimize potential for exposure to precipitation. Failure to do so will result in requirement of undercut and replacement of degraded soils at Contractor’s expense. Coordinate inspection and testing by Owner’s testing agent. Provide positive slopes for surface drainage of all disturbed areas. No ponding of moisture on soil surfaces shall be permitted.

B. Perform excavation to subgrades for building pad (per Section 030300), parking lot and other site amenities. Obtain inspection and testing of subgrades. All existing construction debris (foundations, floor slabs, underground utilities, etc.), as well as any other existing deleterious materials encountered within the proposed construction limits will be completely removed from beneath foundations and the floor slab. **Excavation for**

footings shall only be performed when footings may be poured the same day, without danger of precipitation. If this cannot be achieved, a 4" flowable fill mud mat may be placed instead. Excavations created due to utility relocations or demolition activities should be backfilled with structural fill materials, placed and compacted in accordance with the recommendations provided in the following paragraphs or with lean concrete or flowable fill. Contractor shall stockpile suitable excavated materials necessary for fill required and haul away and dispose of excess material at off-site location.

C. Excavation shall include the satisfactory removal and disposal of all materials encountered, regardless of the nature of the materials, the condition of the materials at the time they are excavated, or the manner in which they were excavated. All excavation shall be **unclassified**.

D. Unauthorized excavation: Backfill and fill all over excavation to proper grades. Fill over excavation at footings with 1,500 psi concrete. Additional labor and material for unauthorized excavation and remedial work at Contractor's expense.

E. Shore, sheet, or brace excavations as required to maintain them as secure from caving. Remove shoring and bracing as backfilling progresses, when banks are safe against caving.

F. The use of explosives is not permitted.

G. When necessary, cut away rock in bottom of excavations to form level beds that follow natural strata. Form with sharp steps when steps are required. In utility trenches, excavate 6" below invert elevation of pipe and 24" wider than pipe diameter, minimum 36" trench width. Remove loose materials to sound base.

H. Existing storm sewerage: Where existing sewers pass beneath new paving, remove existing earth fill to the top of the sewer pipe or to a depth as directed by the Geotechnical Engineer. Install an approved backfill material compacted in maximum 8" layers. Extend compacted fill from top of sewer pipe to proposed paving subgrade elevation.

3.05 DRAINAGE

A. Provide necessary pumps and drainage lines and maintain excavations, including footings, basements and pits, free from water, ice and snow during excavating and subsequent work operations.

B. Provide drainage of the working area at all times.

3.06 FILLING, BACKFILLING, AND COMPACTING

A. Obtain inspection and approval of subgrade surfaces by Geotechnical Engineer prior to filling operations. Scarify, dry, and compact soft and wet areas; remove and replace unsuitable subgrade materials with an approved compacted fill material. Take corrective measures before placing fill materials.

1. Topsoil not permitted as fill or backfill material within structure limits or under paved areas.
2. Reference section 030300 for backfill within building footprint.
3. If insufficient lean clay is not available on site to meet the design grades, the Contractor shall import suitable material from off-site. The borrow soil shall be tested by the Geotechnical Engineer for acceptability prior to transport to the site.

B. Spread approved fill material uniformly in layers not greater than 8" of loose thickness over entire fill area.

1. Lift thickness requirements may be modified by Geotechnical Engineer to suit equipment and materials or other conditions when required to assure satisfactory compaction.

2. Moisture-condition fill material by aerating or watering and thoroughly mix material to obtain moisture content permitting proper compaction.

3. Place and compact each layer of fill to indicated density before placing additional fill material. Repeat filling until proposed grade, profile, or contour is attained.

4. Suspend fill operations when satisfactory results cannot be obtained because of environmental or other unsatisfactory site conditions. Do not use muddy or frozen subgrade surface. Do not place fill material on muddy or frozen subgrade surface.

5. Maintain surface conditions, which permit adequate drainage of rainwater and prevent ponding of surface water in pockets. When fill placement is interrupted by rain, remove wet surface materials or permit to dry before placing additional fill material.

C. Filling at existing trees to remain: No fill shall be permitted within the dripline of existing trees to remain.

D. Place backfill materials in uniform layers not greater than 8” loose thickness over entire backfill area and compact each lift properly. Backfill shall be placed in uniform layers not greater than 4" loose thickness over areas where compaction is achieved with hand compactors or manual means.

E. Fill all areas of settlement to proper grade before subsequent construction operations are performed.

F. Compaction:

1. Provide compaction control for all fill and backfill.

2. Compact top 12" of subgrade and each layer of fill or backfill material at future paved areas to 98% of maximum dry density at optimum moisture content in accordance with ASTM D698 Standard Proctor Method. Extend compaction at least 1-0" beyond slabs-on-grade and paving.

3. Compact top 6" of subgrade and each layer of fill material at future lawns and unpaved areas to 85% of maximum dry density at optimum moisture content in accordance with ASTM D698 Standard Proctor Method.

4. Water settling, puddling, and jetting of fill and backfill materials as a compaction method are not acceptable.

5. Maintain moisture content of materials, during compaction operations within required moisture range to obtain indicated compaction density.

6. Provide adequate equipment to achieve consistent and backfill materials.

3.08 EROSION CONTROL

A. Provide erosion control measures as indicated on plans including installation of silt fencing, installation of silt check inlet controls with specified materials.

1. Install silt fence in areas indicated on plans to conform with specified details. Silt fencing shall be installed prior to all grading activity.

B. Contractor shall provide continual maintenance of erosion control structures, including but not limited to:

1. Removal of silt, trash, mud, debris from ditches, channel and from silt fences.

2. Replacement of silt fence that has been damaged or destroyed.

C. Contractor shall keep all public roads free of silt, dirt, mud and debris throughout the entire project. Contractor shall remove and clean any silt, dirt, mud and debris from roadways at their expense.

E. Contractor shall thoroughly read and comply with all aspects of the SWPPP plan. The plan includes certifications that must be signed and submitted by the contractor and appropriate sub-contractors prior to approval of the first application of payment.

F. The Contractor shall be named a co-permittee of the KPDES or General KYR10 Permit and shall agree to the following certification:

“I certify under penalty of law that I understand the terms and conditions of the general Kentucky Pollutant Discharge Elimination System (KPDES) or General KYR10 Permit that authorized the storm water discharges associated with industrial activity from the construction site identified as part of this certification.”

The Contractor shall be responsible for preparing and submitting the Notice of Intent to governing agency 30 days prior to site disturbance.

3.09 FINISH GRADING

A. Prior to finish grading, remove all 1” size and larger gravel from top 6” of subgrade soil in lawn areas and planting bed or tree planting areas. Make certain that areas with concentrated amounts of stone of any size including smaller than 1”, such as stockpile/staging areas, edges of pavement or utility trenches, have been raked clean of stone prior to placement of topsoil. Uniformly distribute and spread stockpiled topsoil. Provide minimum 12" average depth at lawn and planting areas. Use loose, dry topsoil. Do not use frozen or muddy topsoil. Place during dry weather. Do not grade topsoil with equipment that will over compact topsoil preventing the adequate root growth of proposed turf. Bulldozers and backhoes are not suitable for the final step of finish grading. Tractors or skid steers with box graders shall be used to groom the soil and remove the clods and rocks.

C. Fine grade topsoil eliminating rough and low areas to ensure positive drainage. Maintain levels, profiles, and contours of subgrades.

D. Remove stones, roots, weeds, and debris while spreading topsoil materials. Rake surface clean of stones 1" or larger in any dimension and all debris. Provide surfaces suitable for soil preparation provided under lawn and planting work.

E. Landscape Architect shall be notified a minimum of 2 days prior to placement of topsoil so the subgrade may be inspected and the placement of topsoil by the Contractor may be observed.

F. Maintenance:

1. Protect finish graded areas from traffic and erosion. Keep free of trash and debris. Repair and re-establish grades in settled, eroded, and damaged areas.

2. Where completed areas are disturbed by construction operations or adverse weather, scarify, re-shape, and compact to required density.

3.10 FIELD QUALITY CONTROL

A. Contractor shall provide adequate notice, cooperate with, provide access to the work, obtain samples, and assist testing agency and their representatives in execution of their function.

B. Fill materials: Test proposed materials to verify suitability for use, gradation of material, moisture-density relation by ASTM D698 Standard Proctor Method, design bearing value, and percent of organic materials.

C. Subgrade surfaces: Based on visual examination at the site, provide bearing tests as required to verify questionable subgrade surfaces are adequate and meet or exceed design bearing values.

1. Structure slabs and paved areas: Make at least 1 test for each 2,000 sq. ft. of questionable surface.

D. Compaction operations: Coordinate full-time inspection and testing during filling and compaction operations. Test each lift to fill to verify compaction meets specified requirements. Provide periodic inspection and testing during site area filling and compaction operations.

1. Future paved areas: Make at least 1 test for each 5,000 sq. ft. of each 8” thick fill lift. A minimum of two tests per each lift are required.

E. When, during progress of work, field tests or observations indicate that installed compacted materials do not meet specified requirements, provide additional compaction until specified density is achieved, or remove and replace defective materials with new materials as directed by the Geotechnical Engineer. Cost of additional labor, materials, and testing to attain specified density shall be provided at Contractor's expense.

3.11 DISPOSAL OF WASTE MATERIALS

A. Stockpile, haul from site, and legally dispose of waste materials, including deleterious soil, trash, and debris.

B. Maintain disposal route clear, clean, and free of debris. Disposal in any floodplain is not allowed.

3.12 CLEANING

A. Upon completion of earthwork operations, clean areas within contract limits, remove tools, and equipment. Provide site clear, clean, free of debris, and suitable for site work operation.

END OF SECTION 312000

SECTION 312001 - STORM WATER POLLUTION PREVENTION PLAN (SWPPP)

PART 1 - GENERAL

1.1 RELATED DOCUMENTS

A. The following documents comprise the SWPPP:

1. Specification Section 311000, 312000
2. Best Management Practices (BMP) Plan
3. Notice of Intent for Storm Water Construction Activities (NOI-SWCA)
4. Notice of Termination (NOT)
5. CMs BMP implementation schedule
6. Operation and Maintenance Plan Checklist

1.2 SUBMITTALS

A. Notice of Intent: A minimum of **7 days** prior to beginning any work, the Construction Manager (CM) shall submit a Notice of Intent for Storm Water Construction Activities (NOI-SWCA) for a General Permit to the Kentucky Division of Water via their online e-permitting web site located at:

https://dep.gateway.ky.gov/eForms/default.aspx?FormID=7.

A paper NOI-SWCA may be submitted to the DOW a minimum of 30 days prior to commencement of construction activities if the CM is unable to submit electronically. A copy shall be sent to the office of CARMAN and shall be kept on file with the BMP Plan and the SWPPP.

B. CMs BMP implementation schedule: Prior to mobilizing on the site, the CM shall submit a detailed schedule to the design professional outlining the sequence of major activities that includes the installation of all controls, earth disturbing activities and stabilization activities. This implementation schedule will become part of the SWPPP.

C. Notice of Termination: Upon final stabilization of the construction site and removal of all temporary erosion and sediment control measures, the CM shall submit a Notice of Termination (NOT) to the Kentucky Division of Water. A copy shall be sent to the office of CARMAN and shall be retained with the BMP Plan and the SWPPP for a period of one year after filing the NOT. A copy of the NOT is included at the end of this section.

1.3 QUALITY ASSURANCE

A. Inspections: The CM shall employ an erosion control inspector to inspect all storm water control measures as outlined in the KPDES Storm Water General Permit (KYR10). Qualified inspector shall be certified by the Kentucky Erosion Prevention and Sediment Control Program (KEPSC). Inspections shall be made at least once every 7 days and within 24 hours of the end of a storm event that is 0.5 inches or greater. Areas that have been temporarily or finally stabilized shall be inspected at least once every month. Revisions to the BMP plan based on the results of the inspection shall be implemented within seven (7) days of the inspection.

B. Reports: The qualified inspector conducting the inspections shall prepare a report summarizing the scope of the inspection, names and qualifications of personnel making the inspection, the date of the inspection, major observations relating to the implementation of the BMP plan, and any corrective actions taken shall be made and kept as part of the BMP plan for at least three (3) years after the date of the inspection, or until one (1) year after coverage under the General Permit (KYR10) ends. The report is to be signed by the qualified inspector. A copy of the report is to be delivered to CARMAN and the CM via the same transmittal and at the same time.

C. The SWPPP implementation and methods of construction shall comply with the following standards

1. KPDES General Permit No.: KYR10, General KPDES Permit for Storm Water Point Source Discharges Construction Activities.
2. EPA 832-R-92-005: Storm Water Management for Construction Activities: Developing Pollution Prevention Plans and Best Management Practices.

1.4 PROJECT DESCRIPTION

A. General: The proposed development and land disturbance activity is located in Fayette County on Sports Center Drive, backing up to the end of Mt. Vernon Drive. The former Cliff Hagan Baseball Stadium is located on the property owned by the University of Kentucky, adjacent to the outdoor Track & Field facility. The property is bounded by the outdoor track to the north, a residential neighborhood to the east, a parking lot and intramural fields to the south and a parking lot to the west. The University owns all of the surrounding property to the west, south and north. Land to the east is privately owned residential property. The total property area planned to be disturbed during construction operations is approximately 6 acres. The average pre-construction runoff coefficient is ___ and the average post construction runoff coefficient is ___. The latitude and longitude are 38.02764586892786 and -84.49886787210549 respectively.

B. Soils: The Fayette County Soil Survey was researched to determine the soil types for the affected watershed on this project. The entire site consists of Bluegrass – Maury Silt Loam, according to the Geotechnical Report. The borings indicate that fill is present over lean and fat clay over much of the site which is underlain with highly weathered rock consisting of shale and limestone.

C. Site Conditions: The topography of the site slopes approximately 6 to 7 feet in elevation from west to east and approximately 10 feet from south to north at the eastern portion of the site. The site is in the Town Branch watershed. The site development will result in an increase in the amount of impervious surface, so a detention basin has been designed, with water quality in the bottom of the basin, in addition to a Water Quality Unit. The discharge rate from the detention basin to the existing storm sewer to the N.E. of the site will not exceed existing levels.

D. Critical Areas:

1. Sports Center Drive: It is crucial for the motoring public to prevent mud and debris from entering the roadway.
2. Town Branch: Sediment controls are already in place from the demolition of the baseball stadium and they must be in place prior to land disturbance activities to prevent sediment laden runoff from reaching the public sewer system and ultimately the receiving water.

1.5 MATERIAL INVENTORY

A. The material or substances listed below are expected to be present onsite during construction. The CM shall amend this list as appropriate as part of the overall SWPPP.

1. Concrete
2. Detergents
3. Paints (enamel and latex)
4. Metal studs
5. Tar
6. Metal roofing
7. Fertilizers
8. Masonry Block
9. Wood
10. Petroleum products

PART 2 - CONTROLS

2.1 EROSION AND SEDIMENT CONTROL MEASURES

A. The erosion and sediment control measures will be typical of a small scale earth moving site including:

1. Construction Entrance
2. Dust and Pollutant Control
3. Fertilizer Application Control
4. Mulching-Permanent and Temporary
5. Silt Traps
6. Silt Fence Silt Control
7. Land Grading
8. Permanent Seeding/Sodding
9. Inlet Protection

2.2 BMP PLAN

A. The permittee shall modify the BMP plan when there is a change in design, construction, operation, or maintenance of the site which has significant effect on the potential for the discharge of pollutants to the waters of the Commonwealth and shall implement the changes within seven (7) days.

B. The permittee shall amend the BMP plan if it proves to be ineffective in controlling the discharge of pollutants to the waters of the Commonwealth and shall implement the changes within seven (7) days.

2.3 STABILIZATION PRACTICES

A. Temporary Stabilization: Temporary stabilization of top soil stockpiles and disturbed portions of the site shall begin within 14 days on areas where construction activities have temporarily (for 21 days or more) ceased. Temporary stabilization can be accomplished through seeding Rye

(grain) applied at 120 pounds per acre and/or straw mulching at a rate of 4,000 pounds of straw per acre.

B. Permanent Stabilization: Disturbed portions of the site where construction activities permanently ceases shall be stabilized with permanent seed or sodded no later than 14 days after the last construction activity. Most areas will be sodded, however, seeded areas will receive the following. The permanent seed mix shall consist of 90% tall fescue (Festuca arundinacea) blend of minimum three (3) cultivars and 10% annual rye sown at a rate of 175-lbs/acre. Prior to seeding, ground agricultural limestone at rate specified by soil test and 220 lbs/acre of 20-26-6 fertilizer shall be applied to each acre stabilized. Seeding shall be done with a hydroseeding process as specifed. Steep slopes and drainage channels shall be sodded. Follow specs for post fertilization and maintenance for watering, etc.

C. Dust Control: Apply water, polyacrylamide, or other stabilizers to bare areas if windblown dust becomes a problem. Vegetative cover is the most effective means of dust and erosion control.

D. Storm water management: The development of the site will not result in increased runoff during construction. However, the CM shall conduct all operations responsibly to prevent off-site sedimentation. Curb and gutter, catch basins, yard drains and piping will provide storm water capture and control. Roof drains will be piped underground to the storm drain system to prevent surface splash and erosion. The structural control measures detailed on the Erosion Control Plan are proposed to minimize the impact of erosion. A water quality unit will provide permanent water quality to runoff before it leaves the site and enters the public storm sewer.

E. The CM shall also manage the site as needed according to the following checklist:

1. Manage the site to infiltrate stormwater into the ground and keep sediment out of storm drains.
2. Minimize the amount of exposed soil on site at any one time to the extent possible.
3. Plan the project in stages to minimize the amount of area that is bare and subject to erosion.
4. Vegetate disturbed areas with permanent or temporary seeding immediately upon reaching final grade.
5. Vegetate or cover stockpiles that will not be used immediately.
6. Reduce the velocity of stormwater both onto and away from the project area.
7. Use interceptors, diversions, vegetated buffers, and check dams to slow down stormwater as it travels across and away from the project site.
8. Construct temporary diversion measures to direct flow away from exposed areas toward stable portions of the site.
9. Protect defined channels immediately with measures adequate to handle the storm flows expected.
10. Use sod, geotextile, natural fiber, riprap, or other stabilization measures to allow channels to carry water without causing erosion.
11. Maintain all BMPs to ensure their effectiveness during the life of the project.
12. Maintain fences that protect sensitive areas, silt fences, diversion structures, and other BMPs.

2.4 OTHER CONTROLS

A. Waste Materials: All waste materials will be collected and stored in a secure metal dumpster rented from licensed waste management company. Dumpster shall meet all local and site solid waste regulations. All trash and construction debris will be deposited in the dumpster. The dumpster will be emptied when 90% full and trash hauled to the respective approved landfill. No construction waste will be buried on site. All personnel will be instructed regarding the correct

procedure for waste disposal. Notices stating these practices will be posted at the office trailer and the site superintendent will be responsible for seeing that these procedures are followed.

B. Hazardous Waste: The use of any hazardous material is not anticipated at this site. But in such an event all hazardous waste materials will be disposed of in a manner specified by local or state regulation or by manufacturer. Site personnel will be instructed in these practices, and the site superintendent will be responsible for seeing that these practices are followed.

C. Sanitary Waste: All sanitary waste will be collected from portable units at a minimum of one time per week by a licensed sanitary waste contractor as required by local regulation.

D. Offsite vehicle tracking: Stabilized construction entrances shall be provided to help reduce vehicle tracking of sediments at the primary points of entry to the site. The adjacent paved street will be swept to remove any excess mud, dirt or rock tracked from site. Dump trucks hauling material from the site will be covered with a tarpaulin.

E. Non-Storm Water Discharges: It is expected that the following non-storm water discharges could occur from the site during the construction period

1. Water from water line sterilization/flushing. All water to be treated, neutralized, and handled per Kentucky Division of Water regulations.
2. Pavement wash waters (where no spills or leaks of toxic or hazardous materials have occurred).
3. Uncontaminated ground water (from dewatering excavation as applicable).

2.5 SEQUENCE OF MAJOR ACTIVITIES

A. The CM shall prepare his BMP implementation schedule based on the following outline of major activities.

Construction Activity	Schedule Consideration
Construction Access-entrance to site, construction routes, equipment parking areas	This is the first land disturbing activity. As soon as construction begins, stabilize any bare areas with gravel and temporary vegetation.
Sediment traps and sediment fences	After construction site is accessed, principal sediment fence barriers, as applicable, should be installed, with addition of temporary traps and barriers as needed during grading operation.
Runoff control-diversions, perimeter dikes, water bars, outlet protection	Key practices should be installed after the installation of principal sediment traps and before land grading. Additional runoff control measures may be installed during grading as required.
Land clearing and grading-site preparation(topsoil strip, excavation, fill placement, grading, sediment traps, barriers, diversions, drains, surface roughening)	Implement major clearing and grading after installation of principal sediment and run off control measures, and install additional control measures as grading continues. Clear borrow and disposal areas as required, and mark tree and buffers for preservation. Clearing will be kept to a minimum.

Surface stabilization-temporary and permanent seeding, mulching, sodding, riprap	Temporary or permanent stabilizing measure should be applied immediately to any disturbed areas where work has been either completed or delayed 21 days. Land disturbance will be scheduled to limit exposure of bare soils to erosive elements to the extent possible.
Building construction-buildings, utilities, storm piping, curb and gutter, paving	During construction, install any erosion and sediment control measures that are needed per the attached specific sediment control plan and according to local regulatory agency, i.e., additional inlet control, etc. Install gravel areas for building material lay down and for vehicular traffic.
Landscaping and final stabilization-backfilling, topsoil replacement, trees, shrubs, permanent seeding, sodding, riprap	Last construction phase. Vegetation and mulch will be applied to applicable areas immediately after final grading is completed. Stabilize all open areas, including, borrow and fill areas, remove and stabilize temporary control measures as prescribed on the accompanying erosion control plan sheets.

B. Timing of controls/measures: As indicated on the Sequence of Major Activities, silt fences and construction entrances will be constructed prior to clearing or grading on other portions of the site. Areas where construction activity ceases for more than 21 days will be stabilized with temporary seed and mulch within 14 days of the last disturbance. Once construction activity ceases permanently in an area, that area will be stabilized with permanent seed and mulch or sod as specified. After the entire site is stabilized, the accumulated sediment will be removed from the trap or basin and the check dams and silt fence removed as applicable.

2.6 SPILL PREVENTION

A. Good Housekeeping: The following are material management practices that will be used to reduce the risk of spills or other accidental exposure of materials and substances to storm water runoff.

1. An effort will be made to store only enough product to do the job.
2. All materials stored in a neat, orderly manner in their appropriate containers and, if possible, under a roof or other enclosure.
3. Portable restrooms are to be located so that any spill will not enter into the stormwater runoff.
4. Products will be kept in their original containers with original manufacturers label.
5. Substances will not be mixed with one another unless recommended by manufacturer.
6. Whenever possible, all of a product will be used up before disposing of the container.
7. Manufacturers' recommendations for proper use and disposal will be followed.
8. The site superintendent will inspect daily to ensure proper use and disposal of materials onsite.
9. Petroleum products if stored on-site are to be contained within a double wall steel tank. Tank is to be inside of a bermed area lined with 6 mil plastic. Containment area is to be capable of withholding the entire contents of the tank in the event of a catastrophic spill.

B. Hazardous Products: Hazardous materials are not expected to be brought to the site, if they are required then the guidelines below should be followed.

1. Product will be kept in original containers unless they are not resealable.
2. Original labels and material safety data sheets will be retained for product information.
3. If surplus product must be disposed of, manufacturer's, local government, and state recommended methods for proper disposal shall be followed.

C. Petroleum Products: All onsite vehicles will be monitored for leaks and receive regular preventive maintenance to reduce the chances of leakage. Petroleum products will be stored in tightly sealed containers, which are clearly labeled. Portable equipment fuel tanks will be located as far away from surface water bodies as possible. All oils drained from equipment will be captured in pans or other suitable equipment and placed in drums for removal from site for disposal at an approved off-site location.

D. Fertilizers used will be applied only in the minimum amounts recommended by the manufacturer. Once applied, fertilizer will be worked into the soil to limit exposure to storm water. Storage will be in a covered shed. The contents of any partially used bags of fertilizer will be transferred to a sealable plastic bin to avoid spills.

E. Paints: All containers will be tightly sealed and stored when not required for use. Excess paint will not be discharged to the storm sewer system, but will be properly disposed of according to manufacturers' instructions or State and local regulations.

F. Concrete trucks will be required to wash out or discharge surplus concrete or drum wash water into a wash out pit. The wash out pit shall be designated in an area that does not receive significant runoff and does not drain into a storm network. Upon the completion of the project, this area would be cleared of the concrete and the site restored.

G. Any asphalt substances used onsite will be applied according to KYDOH standards.

H. Spill Control Practices: In addition to the good housekeeping and material management practices discussed in the previous sections of this plan, the following practices will be followed for spill prevention and cleanup.

1. Manufacturers' recommended methods for spill cleanup will be clearly posted and site personnel will be made aware of the procedures and the locations of the information and cleanup supplies.
2. Materials and equipment necessary for spill cleanup will be kept in the material storage are onsite. Equipment and materials will include but not limited to brooms, dustpans, mops, rags, gloves, goggles, kitty litter, sand, sawdust, and plastic and metal trash containers specifically designed for this purpose.
3. All spills will be cleaned up immediately after discovery.
4. The spill area will be kept well ventilated and personnel will wear appropriate protective clothing to prevent injury from contact with a hazardous substance.
5. Spills of toxic or hazardous material will be reported to the appropriate State or local government agency, regardless of size.
6. The spill prevention plan will be adjusted to include measures to prevent this type of spill from reoccurring and how to clean up the spill is there is another one. A description of the spill, what caused it, and the cleanup measures will also be included.
7. The site superintendent responsible for the day-to-day site operations will be the spill prevention and cleanup coordinator. He will designate at least three other site personnel who will receive spill prevention and cleanup training. These individuals will each become responsible for a particular phase of prevention and cleanup. The names of responsible spill personnel will be posted in the material storage area in the office trailer onsite.

I. Spill Notification: In the event of a spill, make the appropriate notification(s) consistent with the following procedures.

1. Any spill of gasoline greater than 25 gallons in a 24-hour period or spill of diesel fuel greater than 75 gallons in a 24-hour period must be reported to the Kentucky Environmental Response Team at (800) 928-2380.
2. Any spill of oil that 1) violates water quality standards, 2) produces a “sheen” on a surface water, or 3) causes a sludge or emulsion must be reported to the Kentucky Environmental Response Team at (800) 928-2380.
3. Any spill of oil or hazardous substance to waters of the state must be reported immediately by the telephone to the List State agency and phone number.
4. Any release of a hazardous substance that may be a threat to human heath or the environment must be reported to the List State agency and phone number immediately upon discovery.

PART 3 - CERTIFICATION

3.1 CONTRACTORS AND SUBCONTRACTORS

A. As part of the BMP implementation schedule, the CM shall clearly state the Contractor or Subcontractor that will implement each control measure identified on the BMP plan.

B. All Contractors and Subcontractors identified in the BMP plan must sign a copy of the certification statement below before conducting any professional service at the site.

1. Construction Manager

a. “I certify under penalty of law that I understand the terms and conditions of the general National Pollution Discharge Elimination System (NPDES) permit that authorizes the storm water discharges associated with industrial activity from the construction site identified as part of this certification.”

_____	_____
Company Name, Address and Phone	Name
_____	_____
	Title
_____	
_____	_____
	Site Address

2. Earthwork Contractor

a. "I certify under penalty of law that I understand the terms and conditions of the general National Pollution Discharge Elimination System (NPDES) permit that authorizes the storm water discharges associated with industrial activity from the construction site identified as part of this certification."

_____	_____
Company Name, Address and Phone	Name
_____	_____
	Title
_____	
_____	_____
	Site Address

3. Storm Sewer Contractor

a. "I certify under penalty of law that I understand the terms and conditions of the general National Pollution Discharge Elimination System (NPDES) permit that authorizes the storm water discharges associated with industrial activity from the construction site identified as part of this certification."

_____	_____
Company Name, Address and Phone	Name
_____	_____
	Title
_____	
_____	_____
	Site Address

4. Site Utility Contractor

a. "I certify under penalty of law that I understand the terms and conditions of the general National Pollution Discharge Elimination System (NPDES) permit that authorizes the storm water discharges associated with industrial activity from the construction site identified as part of this certification."

_____	_____
Company Name, Address and Phone	Name
_____	_____
	Title
_____	
_____	_____
	Site Address

KPDES FORM NOT-SW

Kentucky Pollutant Discharge Elimination System (KPDES)

NOTICE OF TERMINATION (NOT)
of Coverage Under the KPDES General Permit for Storm Water Discharges Associated with Industrial Activity

Submission of this Notice of Termination constitutes notice that the party identified in Section II of this form is no longer authorized to discharge storm water associated with industrial activity under the KPDES program.

ALL NECESSARY INFORMATION MUST BE PROVIDED ON THIS FORM.
(Please see instructions on back before completing this form.)

I. PERMIT INFORMATION
KPDES Storm Water General Permit Number:
Check here if you are no longer the Operator of the Facility: ☐
Check here if the Storm Water Discharge is Being Terminated: ☐
II. FACILITY OPERATOR INFORMATION
Name:
Address:
City/State/Zip Code:
Telephone Number:
III. FACILITY/SITE LOCATION INFORMATION
Name:
Address:
City/State/Zip Code:

Certification: I certify under penalty of law that all storm water discharges associated with industrial activity from the identified facility that are authorized by a KPDES general permit have been eliminated or that I am no longer the operator of the facility or construction site. I understand that by submitting this Notice of Termination, I am no longer authorized to discharge storm water associated with industrial activity under this general permit, and that discharging pollutants in storm water associated with industrial activity of waters of the Commonwealth is unlawful under the Clean Water Act and Kentucky Regulations where the discharge is not authorized by a KPDES permit. I also understand that the submittal of this Notice of Termination does not release an operator from liability for any violations of this permit or the Kentucky Revised Statutes.

NAME (Print or Type)	TITLE
SIGNATURE	DATE

Revised June 1999

INSTRUCTIONS
NOTICE OF TERMINATION (NOT) OF COVERAGE UNDER THE KPDES GENERAL PERMIT FOR STORM WATER DISCHARGES ASSOCIATED WITH INDUSTRIAL ACTIVITY

Who May File a Notice of Termination (NOT) Form
Permittees who are presently covered under the Kentucky Pollutant Discharge Elimination System (KPDES) General Permit for Storm Water Discharges Associated with Industrial Activity may submit a Notice of Termination (NOT) form when their facilities no longer have any storm water discharges associated with industrial activity as defined in the storm water regulations at 40 CFR 122.26 (b)(14), or when they are no longer the operator of the facilities.

For construction activities, elimination of all storm water discharges associated with industrial activity occurs when disturbed soils at the construction site have been finally stabilized and temporary erosion and sediment control measures have been removed or will be removed at an appropriate time, or that all storm water discharges associated with industrial activity from the construction site that are authorized by a KPDES general permit have otherwise been eliminated. Final stabilization means that all soil-disturbing activities at the site have been completed, and that a uniform perennial vegetative cover with a density of 70% of the cover for unpaved areas and areas not covered by permanent structures has been established, or equivalent permanent stabilization measures (such as the use of riprap, gabions, or geotextiles have been employed.

Where to File NOT Form
Send this form to the following address:

Section Supervisor
Inventory & Data Management Section
KPDES Branch, Division of Water
14 Reilly Road, Frankfort Office Park
Frankfort, KY 40601

Completing the Form
Type or print legibly in the appropriate areas and according to the instructions given for each section. If you have questions about this form, call the Storm Water Contact, Industrial Section, at (502) 564-3410.

Section I - Permit Information
Enter the existing KPDES Storm Water General Permit number assigned to the facility or site identified in Section III. If you do not know the permit number, **call the Storm Water Contact, Industrial Section at (502) 564-3410.**

Indicate your reason for submitting this Notice of Termination by checking the appropriate box:

If there has been a change of operator and you are no longer the operator of the facility or site identified in Section III, check the corresponding box.

If all storm water discharges at the facility or site identified in Section III have been terminated, check the corresponding box.

Section II - Facility Operator Information
Give the legal name of the person, firm, public organization, or any other entity that operates the facility or site described in this application. The name of the operator may or may not be the same name as the facility. The operator of the facility is the legal entity which controls the facility's operation, rather than the plant or site manager. Do not use a colloquial name. Enter the complete address and telephone number of the operator.

Section III - Facility/Site Location Information
Enter the facility's or site's official or legal name and complete address, including city, state and ZIP code. If the facility lacks a street address, indicate the state, the latitude and longitude of the facility to the nearest 15 seconds, or the quater, section, township, and range (to the nearest quarter section) of the approximate center of the site.

Section IV - Certification
Federal statutes provide for severe penalties for submitting false information on this application form. Federal regulations require this application to be signed as follows:

For a corporation: by a responsible corporate officer, which means: (i) president, secretary, treasurer, or vice-president of the corporation in charge of a principal business function, or any other person who performs similar policy or decision making functions, or (ii) the manager of one or more manufacturing, production or operating facilities employing more than 250 persons or having gross annual sales or expenditures exceeding $25 million (in second-quarter 1980 dollars), if authority to sign documents has been assigned or delegated to the manager in accordance with corporate procedures;

For a partnership or sole proprietorship: by a general partner or the proprietor; or

For a municipality, State, Federal, or other public facility: by either a principal executive

Revised June 1999

LFUCG EROSION PREVENTION AND SEDIMENT CONTROL
INSPECTION REPORT

Project Name: _____ Grading Permit #: _____

Facility Operator Name on KPDES Form NOI-SW _____

Inspection Date: ___/___/___ Time: _____ Inspected by:_____

Yes	No	N/A	
☐	☐	☐	Engineer's Erosion and Sediment Control (ESP) Plan is on site and being followed
☐	☐	☐	Weekly inspection reports by Facility Operator are on site
☐	☐	☐	Environmentally Sensitive Areas are marked with orange fence and protected from sediment
☐	☐	☐	Floodplain is free of grading except as shown on ESC Plan
☐	☐	☐	25-foot buffer strip along streams is free of grading
☐	☐	☐	Disturbed areas inactive for 14 days are stabilized with seed and mulch
☐	☐	☐	Maximum area exposed without mulch is 25 acres
☐	☐	☐	Construction entrance and parking areas are stabilized with stone
☐	☐	☐	Diversion channels are installed and stabilized
☐	☐	☐	Silt fence is installed and maintained
☐	☐	☐	Stormwater pipe inlets/outlets are protected
☐	☐	☐	Check dams are installed and maintained
☐	☐	☐	Sediment ponds/traps are installed and maintained
☐	☐	☐	Impact stilling basins are installed
☐	☐	☐	Soil stockpiles are stabilized with seed/mulch
☐	☐	☐	Erosion blanket is installed and maintained
☐	☐	☐	Channels are stabilized with proper channel lining
☐	☐	☐	Stream crossings are installed and maintained
☐	☐	☐	Dewatering operations are filtered before discharging to the stream
☐	☐	☐	Pump-around flow diversions are in operation
☐	☐	☐	Mud is being kept off public streets

COMMENTS: _____
_____
_____
_____
_____
_____

10/6/04

END OF SECTION 312001

SECTION 313116 - TERMITE CONTROL

PART 1 - GENERAL

1.1 RELATED DOCUMENTS

A. Drawings and general provisions of the Contract, including General and Supplementary Conditions and Division 01 Specification Sections, apply to this Section.

1.2 SUMMARY

A. Section Includes:

1. Soil treatment.

1.3 ACTION SUBMITTALS

A. Product Data: For each type of product.

1. Include construction details, material descriptions, dimensions of individual components, and profiles for termite control products.
2. Include the EPA-Registered Label for termiticide products.

1.4 INFORMATIONAL SUBMITTALS

A. Qualification Data: For qualified Installer.

B. Product Certificates: For each type of termite control product.

C. Soil Treatment Application Report: After application of termiticide is completed, submit report for Owner's records and include the following:

1. Date and time of application.
2. Moisture content of soil before application.
3. Termiticide brand name and manufacturer.
4. Quantity of undiluted termiticide used.
5. Dilutions, methods, volumes used, and rates of application.
6. Areas of application.
7. Water source for application.

D. Sample Warranties: For special warranties.

1.5 QUALITY ASSURANCE

A. Installer Qualifications: A specialist who is licensed according to regulations of authorities having jurisdiction to apply termite control treatment and products in jurisdiction where Project is located and who employs workers trained and approved by manufacturer to install manufacturer's products.

1.6 FIELD CONDITIONS

A. Soil Treatment:

1. Environmental Limitations: To ensure penetration, do not treat soil that is water saturated or frozen. Do not treat soil while precipitation is occurring. Comply with requirements of the EPA-Registered Label and requirements of authorities having jurisdiction.
2. Related Work: Coordinate soil treatment application with excavating, filling, grading, and concreting operations. Treat soil under footings, grade beams, and ground-supported slabs before construction.

1.7 WARRANTY

A. Soil Treatment Special Warranty: Manufacturer's standard form, signed by Applicator and Contractor, certifying that termite control work consisting of applied soil termiticide treatment will prevent infestation of subterranean termites. If subterranean termite activity or damage is discovered during warranty period, re-treat soil and repair or replace damage caused by termite infestation.

1. Warranty Period: Minimum three years from date of Substantial Completion.

PART 2 - PRODUCTS

2.1 MANUFACTURERS

A. Source Limitations: Obtain termite control products from single source from single manufacturer.

2.2 SOIL TREATMENT

A. Termiticide: EPA-Registered termiticide acceptable to authorities having jurisdiction, in an aqueous solution formulated to prevent termite infestation.

1. Products: Subject to compliance with requirements, provide one of the following:

a. BASF Corp. - Construction Chemicals; Termidor.
b. Bayer Environmental Science; Premise Pre-Construction or Premise Pro.
c. Syngenta; Demon Max.

2. Service Life of Treatment: Soil treatment termiticide that is effective for not less than three years against infestation of subterranean termites.

PART 3 - EXECUTION

3.1 EXAMINATION

A. Examine substrates, areas, and conditions, with Applicator present, for compliance with requirements for moisture content of soil per termiticide label, interfaces with earthwork, slab

and foundation work, landscaping, utility installation, and other conditions affecting performance of termite control.

B. Proceed with application only after unsatisfactory conditions have been corrected.

3.2 PREPARATION

A. General: Prepare work areas according to the requirements of authorities having jurisdiction and according to manufacturer's written instructions before beginning application and installation of termite control treatment(s). Remove extraneous sources of wood cellulose and other edible materials, such as wood debris, tree stumps and roots, stakes, formwork, and construction waste wood from soil within and around foundations.

B. Soil Treatment Preparation: Remove foreign matter and impermeable soil materials that could decrease treatment effectiveness on areas to be treated. Loosen, rake, and level soil to be treated, except previously compacted areas under slabs and footings. Termiticides may be applied before placing compacted fill under slabs if recommended in writing by termiticide manufacturer.

1. Fit filling hose connected to water source at the site with a backflow preventer, according to requirements of authorities having jurisdiction.

3.3 APPLYING SOIL TREATMENT

A. Application: Mix soil treatment termiticide solution to a uniform consistency. Distribute treatment uniformly. Apply treatment at the product's EPA-Registered Label volume and rate for maximum specified concentration of termiticide to the following so that a continuous horizontal and vertical termiticidal barrier or treated zone is established around and under building construction.

1. Slabs-on-Grade and Basement Slabs: Under ground-supported slab construction, including footings, building slabs, and attached slabs as an overall treatment. Treat soil materials before concrete footings and slabs are placed.
2. Foundations: Soil adjacent to and along the entire inside perimeter of foundation walls; along both sides of interior partition walls; around plumbing pipes and electric conduit penetrating the slab; around interior column footers, piers, and chimney bases; and along the entire outside perimeter, from grade to bottom of footing.
3. Masonry: Treat voids.
4. Penetrations: At expansion joints, control joints, and areas where slabs and below-grade walls will be penetrated.

B. Post warning signs in areas of application.

C. Reapply soil treatment solution to areas disturbed by subsequent excavation, grading, landscaping, or other construction activities following application.

3.4 PROTECTION

A. Avoid disturbance of treated soil after application. Keep off treated areas until completely dry.

B. Protect termiticide solution dispersed in treated soils and fills from being diluted by exposure to water spillage or weather until ground-supported slabs are installed. Use waterproof barrier according to EPA-Registered Label instructions.

END OF SECTION 313116

SECTION 321216 - ASPHALT PAVING

PART 1 GENERAL

1.01 DESCRIPTION

A. Provide asphaltic concrete paving as shown and specified. The work includes:

1. Final subgrade preparation and paving base.
2. Parking lot paving.
3. Pavement striping and markings.

B. Related work:

1. Section 312000: Earth Moving.
2. Section 321313: Concrete Paving.

1.02 QUALITY ASSURANCE

A. Testing and inspection: Performed by a qualified independent testing laboratory.

B. Contractor shall provide and pay for testing and inspection during paving operations. Laboratory and inspection service shall be acceptable to the Civil Engineer.

C. Materials and methods of construction shall comply with the following standards:

1. Kentucky Department of Transportation Standard Specifications for Road and Bridge Construction, latest edition.
2. American Society for Testing and Materials, (ASTM).
3. American Association of State Highway and Transportation Officials, (AASHTO).
4. Asphalt Institute, (AI).
5. National Crushed Stone Association, (NCSA).

D. Provide material furnished by a bulk asphaltic concrete producer regularly engaged in the production of hot-mix, hot-laid asphaltic concrete paving materials.

E Tolerances:

1. In-place compacted thickness:
   a. Base course: Maximum 1/2" plus, minus 0".
   b. Surface course: Maximum 1/4" plus, minus 0".
2. Finished surface smoothness:
   a. Base course: Maximum 3/8" in 10'-0".
   b. Surface course: Maximum 1/4" in 10'-0", any direction.

1.03 SUBMITTALS

A. Product data:

1. Submit complete materials list of items proposed for the work. Identify materials source.

2. Submit asphalt mix design and pavement striping paint product data.

B. Submit reports for testing and inspection of the following:

1. Subgrade surfaces.

2. Base materials.

3. Surface materials.

4. Compaction operations.

1.04 DELIVERY, STORAGE, AND HANDLING

A. Deliver manufactured products in manufacturer's original, unopened, and undamaged containers with labels intact and legible.

B. Store and handle manufactured products to prevent damage and deterioration.

1.05 PROJECT CONDITIONS

A. Weather limitations:

1. Do not install base course materials over wet or frozen subgrade surfaces.

2. Do not apply prime and tack coat materials when temperature is 50 degrees F. or below. Do not apply to wet base surface.

3. Install asphalt surface materials only when base is dry and air temperature is 40 degrees F. or above.

B. Grade control: Establish and maintain the required lines and grades, including crown, inverted crown, and cross-slopes, for each course during paving operations.

C. Provide temporary barricades and warning lights as required for protection of project work and public safety.

D. Protect adjacent work from damage, soiling, and staining during paving operations.

PART 2 PRODUCTS

2.01 MATERIALS

A. Subgrade fill: Inert subsoil material free of organic matter, rubbish, debris, and rocks greater than 4" diameter.

B. Aggregate base: dense grade aggregate. Comply with Section 805 of the Kentucky Department of Highways Standard Specifications for Road and Bridge Construction.

C. Tack coat: Comply with Section 806 of the KYDOH Standard Specifications for Highway and Bridge Construction.

D. Asphaltic base course: Superpave mixture comforming to AASHTO MP2. CL. 2 1.0D PG 64-22 complying with the KYDOH Standard Specifications for Highway and Bridge Construction.

E. Asphaltic surface course: Superpave mixture comforming to AASHTO MP2. CL. 3 0.38D PG 64-22 complying with the KYDOH Standard Specifications for Highway and Bridge Construction.

F. Pavement-Marking Paint: Alkyd-resin type, lead and chromate free, ready mixed, complying with AASHTO M 248, Type F; color: as indicated on drawings.

2.02 EQUIPMENT

A. Paving equipment: Spreading, self-propelled asphalt paving machines capable of maintaining line, grade, and thickness shown.

B. Compacting equipment: Self-propelled rollers, minimum 10 ton weight.

C. Hand tools: Rakes, shovels, tampers, and other miscellaneous equipment required to complete the work.

D. Pavement marking equipment: Provide spray machines specifically designed for pavement marking.

PART 3 EXECUTION

3.01 INSPECTION

A. Examine subgrades and installation conditions. Do not start asphaltic concrete paving work until unsatisfactory conditions are corrected.

3.02 PREPARATION

A. Proof roll the subgrade and do all necessary rolling and compacting to obtain firm, even subgrade surface. Fill and consolidate depressed areas. Remove uncompactible materials, replace with clean fill, and compact to 95% of the maximum dry density in accordance with ASTM D698 Standard Proctor Method.

B. Frame adjustments:

1. Verify frames for manholes, catch basins, and other such units, within areas to be paved, are at their proper elevation.

2. Adjust frames as required to match paving. Provide temporary closures over openings until completion of rolling operations. Remove closures at completion of the work. Set covers to grade, flush with the surface of adjoining pavement surface.

C. Coordinate junction of new and existing pavement. Saw cut existing pavement to provide a uniform straight line transition. Meet existing surface levels and maintain drainage slopes. Feathering of transitions is not acceptable.

D. Apply tack coat to contact surfaces of existing pavement, curbs, and structures abutting pavement.

3.03 INSTALLATION: GENERAL

A. Comply with Asphaltic Institute (AI) MS-3 Asphalt Plant Manual for material storage, control and mixing, and for plant equipment and operation.

B. Transport asphaltic concrete mixtures from the mixing plant to the project site in trucks with tight, clean compartments.

C. Pavement replacement:

1. Remove and waste existing asphaltic concrete pavement surface and base materials off site.

2. Obtain inspection, testing and approval of subgrade surfaces by Geotechnical Engineer prior to installing fill or paving base materials.

3. Disc, dry, and recompact or undercut soft and wet subgrade soils prior to placement of any engineered fill. Excavate unsatisfactory soil materials extending below subgrade elevation to depth as directed by the Geotechnical Engineer. Extra excavating and placement of additional fill will be paid for as a change in work. Obtain Civil Engineer's written authorization before performing extra excavation work.

4. Place engineered fill in layers not to exceed 8" in loose thickness with each layer compacted to 95% of the maximum dry density in accordance with ASTM D698 Standard Proctor Method or as specified by the Soils Engineer.

5. Exercise care during earthwork operations to provide adequate surface drainage of all silty-clay soils. Absorption of heavy rainfall, accumulations of water, and heavy construction traffic may result in softening silty-clay soils, and severly weakening subgrade soils shear strength. Failure to provide adequate drainage will negate Contractor’s claims for extra excavation.

6. Install geogrid per manufacturer’s recommendations.

7. Install DGA base material.

8. Install leveling and surface courses.

D. Existing trenches:

1. Remove and waste existing trench fill to subgrade level.

2. Install base material.

3. Install leveling and surface courses.

3.04 INSTALLATION: BASE MATERIALS

A. Install aggregate base materials up to 6" thickness in single course; install 6" and greater thickness in 2 equal courses, base course and top course, total compacted depth as scheduled.

B. Compact aggregate base materials to 84% of the solid volume density as determined by Kentucky Method 64-607 until a uniformly-smooth, hard surface, complying with the lines, grades, elevations, and cross-sections shown has been established. Moisture may be added at job site to aid compaction.

C. Asphaltic base may be used as a wearing surface during construction operations. If used, base shall be inspected and approved by the Geotechnical Engineer, damaged portions removed and replaced, and the entire surface thoroughly cleaned before application of tack coat and finish wearing surface.

3.05 INSTALLATION: SURFACE MATERIALS

A. Remove loose and foreign material from compacted aggregate base immediately before application of asphaltic materials. Do not start surface work until all other work which may damage the finish surface is completed.

B. Install asphaltic base course in multiple courses up to 2” in depth per course, as necessary to provide the total compacted depth as scheduled.

C. When asphalt surface material is not installed immediately following the asphaltic base course installation, apply tack coat on base course, following acceptance by Civil Engineer, at the rate of 0.05 to 0.10 gallons per sq. yd. Allow to dry and cure as required.

D. Place, spread, and strike off the asphalt concrete mixture on a properly prepared and conditioned surface. Inaccessible and small areas may be placed by hand. Place each course to the required grade, cross-section, and scheduled compacted thickness.

E. Place materials in strips not less than 10'-0" wide. After the first strip has been placed and rolled, place all succeeding strips and extend rolling to overlap previous strips. Complete base course for a section before placing surface course materials.

F. Carefully make joints between old and new pavements, and between successive day's work, to ensure a continuous bond between adjoining work. Construct joints to have the same texture, density, and smoothness as other sections of the asphalt concrete course.

G. Apply tack coat to contact surfaces of existing pavement, curbs, and structures abutting pavement.

H. Begin rolling operations when the asphalt concrete mixture will bear the weight of the roller without excessive displacement. Compact areas inaccessible to rollers with vibrating plate compactors.

I. Perform breakdown, second and finish rolling until the asphalt concrete mixture has been compacted to the required surface density and smoothness. Continue rolling until all roller marks are eliminated. Provide a smooth compacted surface true to thickness and elevations required.

J. After final rolling, do not permit vehicular traffic on the pavement until it has cooled and hardened, and in no case sooner than 8 hours.

K. Protect newly placed material from traffic by barricades or other suitable methods acceptable to the Civil Engineer.

3.06 PAVEMENT SURFACE STRIPING AND MARKING

A. Do not apply pavement-marking paint until layout and placement have been verified with Civil Engineer.

B. Sweep and clean surface to eliminate loose material and dust..

C. Apply paint with mechanical equipment to produce pavement markings, of dimensions indicated, with uniform, straight edges. Apply at manufacturer's recommended rates to provide a minimum wet film thickness of 15 mils.

3.07 FIELD QUALITY CONTROL

A. Provide field quality control testing and inspection during asphaltic concrete paving operations.

B. Contractor shall provide adequate notice, cooperate with, provide access to the work, obtain samples, and assist Test Agency and their representatives in execution of their function.

C. Before constructing base course, field verify subgrade surfaces are adequate and meet or exceed design bearing values. Provide testing for each type of paving required.

D. When requested, perform laboratory tests on asphalt pavement mixes to determine compliance with specified requirements.

E. Perform 1 series of compaction tests for aggregate base for each course for each day's work.

F. When requested, test in-place asphalt base course and surface courses for compliance with density and thickness. Take not less than 4" diameter pavement specimens of each completed course. Repair test specimen holes to match adjacent work.

1. Average density of in-place material: Equal to or greater than 97%, with no individual determination less than 95% of average density of laboratory specimens.

2. Perform 1 test for density for each course for each day's work.

3. Thickness: Make 1 test (minimum) for each 5,000 sq. ft. of each type of paving.

G. Test for surface smoothness with 10'-0" straight-edge. Deficient areas shall be defined, removed, and replaced, or adjusted to design thickness by methods acceptable to the Civil Engineer.

H. When, during progress of work, field tests indicate that installed compacted materials do not meet specified requirements, remove defective material, install new materials, and retest at Contractor's expense, as directed by the Civil Engineer.

3.08 PROTECTION

A. Protect paving from damage due to construction and vehicular traffic until final acceptance.

3.09 CLEANING

A. Perform cleaning during installation of the work and upon completion of the work. Remove from site all excess materials, debris, and equipment. Repair damage resulting from paving operations.

B. Sweep pavement and wash free of stains, discolorations, dirt, and other foreign material immediately prior to final acceptance.

END OF SECTION 321216

SECTION 321313 - CONCRETE PAVING

PART 1 - GENERAL

1.1 RELATED DOCUMENTS

A. Drawings and general provisions of the Contract, including General and Supplementary Conditions and Division 1 Specification Sections, apply to this Section.

1.2 SUMMARY

A. This Section includes exterior cement concrete pavement for the following:

1. Concrete curbs, sidewalks and slabs beneath pavers.

B. Related Sections include the following:

1. Section 312000 "Earth Moving" for subgrade preparation, grading, and subbase course.
2. Section 033000 "Cast-in-Place Concrete" for general building applications of concrete.

1.3 DEFINITIONS

A. Cementitious Materials: Portland cement alone or in combination with one or more of blended hydraulic cement, fly ash and other pozzolans, and ground granulated blast-furnace slag.

1.4 SUBMITTALS

A. Product Data: For each type of manufactured material and product indicated.

B. Design Mixtures: For each concrete pavement mixture. Include alternate mixture designs when characteristics of materials, Project conditions, weather, test results, or other circumstances warrant adjustments.

C. Field quality-control test reports.

1.5 QUALITY ASSURANCE

A. Manufacturer Qualifications: Manufacturer of ready-mixed concrete products who complies with ASTM C 94/C 94M requirements for production facilities and equipment.

1. Manufacturer certified according to NRMCA's "Certification of Ready Mixed Concrete Production Facilities."

B. Testing Agency Qualifications: An independent agency qualified according to ASTM C 1077 and ASTM E 329 for testing indicated, as documented according to ASTM E 548.

1. Personnel conducting field tests shall be qualified as ACI Concrete Field Testing Technician, Grade 1, according to ACI CP-01 or an equivalent certification program.

C. ACI Publications: Comply with ACI 301, "Specification for Structural Concrete," unless modified by requirements in the Contract Documents.

D. Concrete Testing Service: Engage a qualified independent testing agency to perform material evaluation tests and to design concrete mixtures.

E. Mockups: Build mockups to verify selections made under sample submittals and to demonstrate aesthetic effects and set quality standards for materials and execution.

1. Build mockups of full-thickness sections of concrete paving to demonstrate typical joints; surface finish, texture, and color; curing; and standard of workmanship.
2. Build mockups of concrete paving in the location and of the size indicated or, if not indicated, build mockups where directed by Architect and not less than 96 inches by 96 inches.
3. Approval of mockups does not constitute approval of deviations from the Contract Documents contained in mockups unless Architect specifically approves such deviations in writing.
4. Approved mockups may become part of the completed Work if undisturbed at time of Substantial Completion.

1.6 PROJECT CONDITIONS

A. Traffic Control: Maintain access for vehicular and pedestrian traffic as required for other construction activities.

PART 2 - PRODUCTS

2.1 MANUFACTURERS

A. In other Part 2 articles where titles below introduce lists, the following requirements apply to product selection:

1. Available Products: Subject to compliance with requirements, products that may be incorporated into the Work include, but are not limited to, products specified.

2.2 FORMS

A. Form Materials: Plywood, metal, metal-framed plywood, or other approved panel-type materials to provide full-depth, continuous, straight, smooth exposed surfaces.

1. Use flexible or curved forms for curves with a radius 100 feet (30.5 m) or less.

B. Form-Release Agent: Commercially formulated form-release agent that will not bond with, stain, or adversely affect concrete surfaces and will not impair subsequent treatments of concrete surfaces.

2.3 STEEL REINFORCEMENT

A. Plain-Steel Welded Wire Reinforcement: ASTM A 185, fabricated from as-drawn steel wire into flat sheets.

B. Reinforcing Bars: ASTM A 615/A 615M, Grade 60 (Grade 420); deformed.

C. Joint Dowel Bars: Plain steel bars, ASTM A 615/A 615M, Grade 60 (Grade 420). Cut bars true to length with ends square and free of burrs.

D. Tie Bars: ASTM A 615/A 615M, Grade 60 (Grade 420), deformed.

E. Hook Bolts: ASTM A 307, Grade A (ASTM F 568M, Property Class 4.6), internally and externally threaded. Design hook-bolt joint assembly to hold coupling against pavement form and in position during concreting operations, and to permit removal without damage to concrete or hook bolt.

2.4 CONCRETE MATERIALS

A. Cementitious Material: Use the following cementitious materials, of the same type, brand, and source throughout the Project:

1. Portland Cement: ASTM C 150, Type I, gray.

B. Normal-Weight Aggregates: ASTM C 33, coarse aggregate, uniformly graded. Provide aggregates from a single source.

1. Maximum Coarse-Aggregate Size: 1-1/2 inches (38 mm) nominal.
2. Fine Aggregate: Free of materials with deleterious reactivity to alkali in cement.

C. Water: ASTM C 94/C 94M.

D. Air-Entraining Admixture: ASTM C 260.

E. Chemical Admixtures: Provide admixtures certified by manufacturer to be compatible with other admixtures and to contain not more than 0.1 percent water-soluble chloride ions by mass of cementitious material.

1. Water-Reducing Admixture: ASTM C 494/C 494M, Type A.

2.5 CURING MATERIALS

A. Absorptive Cover: AASHTO M 182, Class 2, burlap cloth made from jute or kenaf, weighing approximately 9 oz./sq. yd. (305 g/sq. m) dry.

B. Moisture-Retaining Cover: ASTM C 171, polyethylene film or white burlap-polyethylene sheet.

C. Water: Potable.

D. Curing compounds: Sodium silicate type. No dissipating resins are permitted.

1. Products:

a. Chem-Rex Mastertop CST
b. L & M Construction Chemicals – L & M Cure
c. Sonneborn - Sonosil

2.6 CONCRETE CLEANER

A. General purpose acidic cleaner to be used to remove construction dirt or mortar from brick or concrete without burning or streaking.
   1. Sure Klean 600 by Prosoco or approved equal.

2.7 WATER REPELLENT

High-performance, penetrating water repellent for concrete. Chem-trete BSM 400 VOC by Protectosil - Evonik Degussa Corporation, 800-828-0919 or approved equal.

2.8 CONCRETE MIXTURES

A. Prepare design mixtures, proportioned according to ACI 301, for each type and strength of normal-weight concrete determined by either laboratory trial mixes or field experience.

   1. Use a qualified independent testing agency for preparing and reporting proposed concrete mixture designs for the trial batch method.

B. Proportion mixtures to provide normal-weight concrete with the following properties:

   1. Compressive Strength (28 Days): 4,500 psi for all sidewalks, curbs or pavements, except for concrete covered by pavers, which shall be 4,000 psi.
   2. Maximum Water-Cementitious Materials Ratio at Point of Placement: 0.45.
   3. Slump Limit: 4 inches (100 mm), plus or minus 1 inch (25 mm).

C. Add air-entraining admixture at manufacturer's prescribed rate to result in normal-weight concrete at point of placement having an air content as follows:

   1. Air Content: 5-1/2 percent plus or minus 1.5 percent for 1-1/2-inch (38-mm) nominal maximum aggregate size.
   2. Air Content: 6 percent plus or minus 1.5 percent for 1-inch (25-mm) nominal maximum aggregate size.
   3. Air Content: 6 percent plus or minus 1.5 percent for 3/4-inch (19-mm) nominal maximum aggregate size

D. Limit water-soluble, chloride-ion content in hardened concrete to 0.15 percent by weight of cement.

E. Chemical Admixtures: Use admixtures according to manufacturer's written instructions.

   1. Use water-reducing and retarding admixture when required by high temperatures, low humidity, or other adverse placement conditions.

2.9 CONCRETE MIXING

A. Ready-Mixed Concrete: Measure, batch, and mix concrete materials and concrete according to ASTM C 94/C 94M. Furnish batch certificates for each batch discharged and used in the Work.

   1. When air temperature is between 85 deg F (30 deg C) and 90 deg F (32 deg C), reduce mixing and delivery time from 1-1/2 hours to 75 minutes; when air temperature is above 90 deg F (32 deg C), reduce mixing and delivery time to 60 minutes.

PART 3 - EXECUTION

3.1 EXAMINATION

A. Examine exposed subgrades and subbase surfaces for compliance with requirements for dimensional, grading, and elevation tolerances.

B. Proof-roll prepared subbase surface below concrete pavements with heavy pneumatic-tired equipment to identify soft pockets and areas of excess yielding.

1. Completely proof-roll subbase in one direction and repeat in perpendicular direction. Limit vehicle speed to 3 mph (5 km/h).
2. Proof-roll with a loaded 10-wheel tandem-axle dump truck weighing not less than 15 tons (13.6 tonnes).
3. Subbase with soft spots and areas of pumping or rutting exceeding depth of 1/2 inch (13 mm) require correction according to requirements in Division 2 Section "Earthwork."

C. Proceed with concrete pavement operations only after nonconforming conditions have been corrected and subgrade is ready to receive pavement.

3.2 PREPARATION

A. Remove loose material from compacted subbase surface immediately before placing concrete.

3.3 EDGE FORMS AND SCREED CONSTRUCTION

A. Set, brace, and secure edge forms, bulkheads, and intermediate screed guides for pavement to required lines, grades, and elevations. Install forms to allow continuous progress of work and so forms can remain in place at least 24 hours after concrete placement.

B. Clean forms after each use and coat with form-release agent to ensure separation from concrete without damage.

3.4 STEEL REINFORCEMENT

A. General: Comply with CRSI's "Manual of Standard Practice" for fabricating, placing, and supporting reinforcement.

B. Clean reinforcement of loose rust and mill scale, earth, ice, or other bond-reducing materials.

C. Install welded wire reinforcement in lengths as long as practicable. Lap adjoining pieces at least one full mesh, and lace splices with wire. Offset laps of adjoining widths to prevent continuous laps in either direction.

3.5 JOINTS

A. General: Form construction, isolation, and contraction joints and tool edgings true to line with faces perpendicular to surface plane of concrete. Construct transverse joints at right angles to centerline, unless otherwise indicated.

1. When joining existing pavement, place transverse joints to align with previously placed joints, unless otherwise indicated.

B. Construction Joints: Set construction joints at side and end terminations of pavement and at locations where pavement operations are stopped for more than one-half hour unless pavement terminates at isolation joints.

1. Continue steel reinforcement across construction joints, unless otherwise indicated. Do not continue reinforcement through sides of pavement strips, unless otherwise indicated.
2. Provide tie bars at sides of pavement strips where indicated.
3. Butt Joints: Use bonding agent at joint locations where fresh concrete is placed against hardened or partially hardened concrete surfaces.
4. Keyed Joints: Provide preformed keyway-section forms or bulkhead forms with keys, unless otherwise indicated. Embed keys at least 1-1/2 inches (38 mm) into concrete.
5. Doweled Joints: Install dowel bars and support assemblies at joints where needed to tie into existing work and prevent differential settlement. Lubricate or asphalt-coat one-half of dowel length to prevent concrete bonding to one side of joint.

C. Isolation Joints: Form isolation joints of preformed joint-filler strips abutting concrete curbs, catch basins, manholes, inlets, structures, walks, other fixed objects, and where indicated.

1. Locate expansion joints at intervals of 50 feet, unless otherwise indicated.
2. Extend joint fillers full width and depth of joint.
3. Terminate joint filler not less than 1/2 inch or more than 1 inch below finished surface if joint sealant is indicated.
4. Place top of joint filler flush with finished concrete surface if joint sealant is not indicated.
5. Furnish joint fillers in one-piece lengths. Where more than one length is required, lace or clip joint-filler sections together.
6. Protect top edge of joint filler during concrete placement with metal, plastic, or other temporary preformed cap. Remove protective cap after concrete has been placed on both sides of joint.
7. Doweled Joints: Install dowel bars and support assemblies at joints where walkways intersect building entrances. Lubricate or asphalt-coat one-half of dowel length to prevent concrete bonding to one side of joint.

D. Contraction Joints: Form weakened-plane contraction joints, sectioning concrete into areas as indicated. Construct contraction joints for a depth equal to at least one-fourth of the concrete thickness, as follows to match jointing of existing adjacent concrete pavement:

1. Grooved Joints: Form contraction joints after initial floating by grooving and finishing each edge of joint with grooving tool to a 1/4-inch radius. Eliminate groover marks on concrete surfaces.

2. Edging: Tool edges of pavement, gutters, curbs, and joints in concrete after initial floating with an edging tool to a 1/4-inch radius. Eliminate groover marks on concrete surfaces.

3.6 CONCRETE PLACEMENT

A. Inspection: Before placing concrete, inspect and complete formwork installation, steel reinforcement, and items to be embedded or cast in. Notify other trades to permit installation of their work.

B. Remove snow, ice, or frost from subbase surface and reinforcement before placing concrete. Do not place concrete on frozen surfaces.

C. Moisten subbase to provide a uniform dampened condition at time concrete is placed. Do not place concrete around manholes or other structures until they are at required finish elevation and alignment.

D. Comply with ACI 301 requirements for measuring, mixing, transporting, and placing concrete.

E. Do not add water to concrete during delivery or at Project site.

F. Do not add water to fresh concrete after testing.

G. Deposit and spread concrete in a continuous operation between transverse joints. Do not push or drag concrete into place or use vibrators to move concrete into place.

H. Consolidate concrete according to ACI 301 by mechanical vibrating equipment supplemented by hand spading, rodding, or tamping.

1. Consolidate concrete along face of forms and adjacent to transverse joints with an internal vibrator. Keep vibrator away from joint assemblies, reinforcement, or side forms. Use only square-faced shovels for hand spreading and consolidation. Consolidate with care to prevent dislocating reinforcement, dowels, and joint devices.

I. Place concrete in two operations; strike off initial pour for entire width of placement and to the required depth below finish surface. Lay welded wire fabric or fabricated bar mats immediately in final position. Place top layer of concrete, strike off, and screed.

1. Remove and replace concrete that has been placed for more than 15 minutes without being covered by top layer, or use bonding agent if approved by Architect.

J. Screed pavement surfaces with a straightedge and strike off.

K. Commence initial floating using bull floats or darbies to impart an open textured and uniform surface plane before excess moisture or bleed water appears on the surface. Do not further disturb concrete surfaces before beginning finishing operations or spreading surface treatments.

L. Cold-Weather Placement: Comply with ACI 306.1 and as follows. Protect concrete work from physical damage or reduced strength that could be caused by frost, freezing actions, or low temperatures.

1. When air temperature has fallen to or is expected to fall below 40 deg F (4.4 deg C), uniformly heat water and aggregates before mixing to obtain a concrete mixture temperature of not less than 50 deg F (10 deg C) and not more than 80 deg F (27 deg C) at point of placement.
2. Do not use frozen materials or materials containing ice or snow.
3. Do not use calcium chloride, salt, or other materials containing antifreeze agents or chemical accelerators unless otherwise specified and approved in mix designs.

M. Hot-Weather Placement: Comply with ACI 301 and as follows when hot-weather conditions exist:

1. Cool ingredients before mixing to maintain concrete temperature below 90 deg F (32 deg C) at time of placement. Chilled mixing water or chopped ice may be used to control

temperature, provided water equivalent of ice is calculated to total amount of mixing water. Using liquid nitrogen to cool concrete is Contractor's option.

2. Cover steel reinforcement with water-soaked burlap so steel temperature will not exceed ambient air temperature immediately before embedding in concrete.
3. Fog-spray forms, steel reinforcement, and subgrade just before placing concrete. Keep subgrade moisture uniform without standing water, soft spots, or dry areas.

3.7 FLOAT FINISHING

A. General: Do not add water to concrete surfaces during finishing operations.

B. Float Finish: Begin the second floating operation when bleed-water sheen has disappeared and concrete surface has stiffened sufficiently to permit operations. Float surface with power-driven floats, or by hand floating if area is small or inaccessible to power units. Finish surfaces to true planes. Cut down high spots and fill low spots. Refloat surface immediately to uniform granular texture.

1. Provide Light Broom Finish to match existing adjacent sidewalks by striating float-finished concrete surface with a stiff-bristled broom, perpendicular to line of traffic.

3.8 CONCRETE PROTECTION AND CURING

A. General: Protect freshly placed concrete from premature drying and excessive cold or hot temperatures.

B. Comply with ACI 306.1 for cold-weather protection.

C. Evaporation Retarder: Apply evaporation retarder to concrete surfaces if hot, dry, or windy conditions cause moisture loss approaching 0.2 lb/sq. ft. x h (1 kg/sq. m x h) before and during finishing operations. Apply according to manufacturer's written instructions after placing, screeding, and bull floating or darbying concrete, but before float finishing.

D. Begin curing after finishing concrete but not before free water has disappeared from concrete surface.

E. Curing Methods: Cure concrete by moisture curing, moisture-retaining-cover curing, curing compound, or a combination of these as follows:

1. Moist Curing: Keep surfaces continuously moist for not less than seven days with the following materials:

   a. Water.
   b. Continuous water-fog spray.
   c. Absorptive cover, water saturated and kept continuously wet. Cover concrete surfaces and edges with 12-inch (300-mm) lap over adjacent absorptive covers.

2. Moisture-Retaining-Cover Curing: Cover concrete surfaces with moisture-retaining cover for curing concrete, placed in widest practicable width, with sides and ends lapped at least 12 inches (300 mm), and sealed by waterproof tape or adhesive. Immediately repair any holes or tears during curing period using cover material and waterproof tape.
3. Curing Compound: Apply uniformly in continuous operation by power spray or roller according to manufacturer's written instructions. Recoat areas subjected to heavy rainfall

within three hours after initial application. Maintain continuity of coating and repair damage during curing period.

3.9 WATER REPELLENT

A. Allow concrete and joint sealants to completely cure prior to applying the water repellent. At a minimum, it should be allowed to cure 28 days.

B. Clean concrete surfaces thoroughly and allow wet concrete to dry a minimum of 24 hours prior to application of water repellent.

C. Apply water repellent to all site concrete by sprayer per manufacturer's instructions. Protect adjacent surfaces of building, other pavements, lawns and landscape materials from overspray.

3.10 PAVEMENT TOLERANCES

A. Comply with tolerances of ACI 117 and as follows:

1. Elevation: 1/4 inch (6 mm).
2. Thickness: Plus 3/8 inch (10 mm), minus 1/4 inch (6 mm).
3. Surface: Gap below 10-foot- (3-m-) long, unleveled straightedge not to exceed 1/4 inch (6 mm).
4. Lateral Alignment and Spacing of Tie Bars and Dowels: 1 inch (25 mm).
5. Vertical Alignment of Tie Bars and Dowels: 1/4 inch (6 mm).
6. Alignment of Tie-Bar End Relative to Line Perpendicular to Pavement Edge: 1/2 inch (13 mm).
7. Alignment of Dowel-Bar End Relative to Line Perpendicular to Pavement Edge: Length of dowel 1/4 inch per 12 inches (6 mm per 300 mm).
8. Joint Spacing: 3 inches (75 mm).
9. Contraction Joint Depth: Plus 1/4 inch (6 mm), no minus.
10. Joint Width: Plus 1/8 inch (3 mm), no minus.

3.11 FIELD QUALITY CONTROL

A. Testing Agency: Engage a qualified independent testing and inspecting agency to perform field tests and inspections and prepare test reports.

B. Testing Services: Testing of composite samples of fresh concrete obtained according to ASTM C 172 shall be performed according to the following requirements:

1. Testing Frequency: Obtain at least 1 composite sample for each 5000 sq. ft. (465 sq. m) or fraction thereof of each concrete mix placed each day.

   a. When frequency of testing will provide fewer than five compressive-strength tests for each concrete mixture, testing shall be conducted from at least five randomly selected batches or from each batch if fewer than five are used.

2. Slump: ASTM C 143/C 143M; one test at point of placement for each composite sample, but not less than one test for each day's pour of each concrete mix. Perform additional tests when concrete consistency appears to change.
3. Air Content: ASTM C 231, pressure method; one test for each composite sample, but not less than one test for each day's pour of each concrete mix.

4. Concrete Temperature: ASTM C 1064; one test hourly when air temperature is 40 deg F (4.4 deg C) and below and when 80 deg F (27 deg C) and above, and one test for each composite sample.
5. Compression Test Specimens: ASTM C 31/C 31M; cast and laboratory cure one set of three standard cylinder specimens for each composite sample.
6. Compressive-Strength Tests: ASTM C 39/C 39M; test 1 specimen at 7 days and 2 specimens at 28 days.

    a. A compressive-strength test shall be the average compressive strength from 2 specimens obtained from same composite sample and tested at 28 days.

C. Strength of each concrete mix will be satisfactory if average of any 3 consecutive compressive-strength tests equals or exceeds specified compressive strength and no compressive-strength test value falls below specified compressive strength by more than 500 psi (3.4 MPa).

D. Test results shall be reported in writing to Architect, concrete manufacturer, and Contractor within 48 hours of testing. Reports of compressive-strength tests shall contain Project identification name and number, date of concrete placement, name of concrete testing and inspecting agency, location of concrete batch in Work, design compressive strength at 28 days, concrete mixture proportions and materials, compressive breaking strength, and type of break for both 7- and 28-day tests.

E. Nondestructive Testing: Impact hammer, sonoscope, or other nondestructive device may be permitted by Architect but will not be used as sole basis for approval or rejection of concrete.

F. Additional Tests: Testing and inspecting agency shall make additional tests of concrete when test results indicate that slump, air entrainment, compressive strengths, or other requirements have not been met, as directed by Architect.

G. Remove and replace concrete pavement where test results indicate that it does not comply with specified requirements.

H. Additional testing and inspecting, at Contractor's expense, will be performed to determine compliance of replaced or additional work with specified requirements.

3.12 REPAIRS AND PROTECTION

A. Remove and replace concrete pavement that is broken, damaged, or defective or that does not comply with requirements in this Section.

B. Drill test cores, where directed by Architect, when necessary to determine magnitude of cracks or defective areas. Fill drilled core holes in satisfactory pavement areas with portland cement concrete bonded to pavement with epoxy adhesive.

C. Protect concrete from damage. Exclude traffic from pavement for at least 14 days after placement. When construction traffic is permitted, maintain pavement as clean as possible by removing surface stains and spillage of materials as they occur.

D. Maintain concrete pavement free of stains, discoloration, dirt, and other foreign material. Sweep concrete pavement not more than two days before date scheduled for Substantial Completion inspections.

END OF SECTION 321313

SECTION 321373 - CONCRETE PAVING JOINT SEALANTS

PART 1 - GENERAL

1.1 RELATED DOCUMENTS

A. Drawings and general provisions of the Contract, including General and Supplementary Conditions and Division 01 Specification Sections, apply to this Section.

1.2 SUMMARY

A. This Section includes the following:

1. Expansion and contraction joints within cement concrete pavement.

B. Related Sections include the following:

1. Division 32 Section "Concrete Paving" for constructing joints in concrete pavement.

1.3 SUBMITTALS

A. Product Data: For each joint-sealant product indicated.

B. Samples for Verification: For each type and color of joint sealant required. Install joint-sealant samples in 1/2-inch- (13-mm-) wide joints formed between two 6-inch- (150-mm-) long strips of material matching the appearance of exposed surfaces adjacent to joint sealants.

C. Product Certificates: For each type of joint sealant and accessory, signed by product manufacturer.

D. Qualification Data: For Installer.

E. Compatibility and Adhesion Test Reports: From sealant manufacturer, indicating the following:

1. Materials forming joint substrates and joint-sealant backings have been tested for compatibility and adhesion with joint sealants.
2. Interpretation of test results and written recommendations for primers and substrate preparation needed for adhesion.

F. Product Test Reports: Based on evaluation of comprehensive tests performed by a qualified testing agency, for sealants.

1.4 QUALITY ASSURANCE

A. Installer Qualifications: An employer of workers trained and approved by manufacturer.

B. Source Limitations: Obtain each type of joint sealant through one source from a single manufacturer.

C. Preconstruction Compatibility and Adhesion Testing: Submit to joint-sealant manufacturers, for testing indicated below, samples of materials that will contact or affect joint sealants.

1. Use ASTM C 1087 to determine whether priming and other specific joint preparation techniques are required to obtain rapid, optimum adhesion of joint sealants to joint substrates.
2. Submit not fewer than eight pieces of each type of material, including joint substrates, shims, joint-sealant backings, secondary seals, and miscellaneous materials.
3. Schedule sufficient time for testing and analyzing results to prevent delaying the Work.
4. For materials failing tests, obtain joint-sealant manufacturer's written instructions for corrective measures including use of specially formulated primers.
5. Testing will not be required if joint-sealant manufacturers submit joint preparation data that are based on previous testing of current sealant products for adhesion to, and compatibility with, joint substrates and other materials matching those submitted.

D. Product Testing: Obtain test results for "Product Test Reports" Paragraph in "Submittals" Article from a qualified testing agency based on testing of current sealant products within a 36-month period preceding the commencement of the Work.

1. Testing Agency Qualifications: An independent testing agency qualified according to ASTM C 1021 for testing indicated, as documented according to ASTM E 548.

1.5 DELIVERY, STORAGE, AND HANDLING

A. Deliver materials to Project site in original unopened containers or bundles with labels indicating manufacturer, product name and designation, color, expiration date, pot life, curing time, and mixing instructions for multicomponent materials.

B. Store and handle materials to comply with manufacturer's written instructions to prevent their deterioration or damage due to moisture, high or low temperatures, contaminants, or other causes.

1.6 PROJECT CONDITIONS

A. Do not proceed with installation of joint sealants under the following conditions:

1. When ambient and substrate temperature conditions are outside limits permitted by joint-sealant manufacturer.
2. When joint substrates are wet or covered with frost.
3. Where joint widths are less than those allowed by joint-sealant manufacturer for applications indicated.
4. Where contaminants capable of interfering with adhesion have not yet been removed from joint substrates.

PART 2 - PRODUCTS

2.1 MANUFACTURERS

A. Available Products: Subject to compliance with requirements, products that may be incorporated into the Work include, but are not limited to, products listed in other Part 2 articles.

B. Products: Subject to compliance with requirements, provide one of the products listed in other Part 2 articles.

2.2 MATERIALS, GENERAL

A. Compatibility: Provide joint sealants, backing materials, and other related materials that are compatible with one another and with joint substrates under conditions of service and application, as demonstrated by joint-sealant manufacturer based on testing and field experience.

B. Colors of Exposed Joint Sealants: As selected by Architect from manufacturer's full range.

2.3 COLD-APPLIED JOINT SEALANTS

A. Single-Component Polyurethane Sealant for Concrete: Single-component, non-priming, self-leveling, gun-grade elastomeric polyurethane sealant complying with ASTM C 920 for Type S; Grade P; Class 25; Uses T, M, and, as applicable to joint substrates indicated, O.

1. Available Products:

1) Sonneborn, Sonolastic SL 1.

PART 3 - EXECUTION

3.1 EXAMINATION

A. Examine joints indicated to receive joint sealants, with Installer present, for compliance with requirements for joint configuration, installation tolerances, and other conditions affecting joint-sealant performance.

1. Proceed with installation only after unsatisfactory conditions have been corrected.

3.2 PREPARATION

A. Surface Cleaning of Joints: Clean out joints immediately before installing joint sealants to comply with joint-sealant manufacturer's written instructions.

B. Joint Priming: Prime joint substrates where indicated or where recommended in writing by joint-sealant manufacturer, based on preconstruction joint-sealant-substrate tests or prior experience. Apply primer to comply with joint-sealant manufacturer's written instructions. Confine primers to areas of joint-sealant bond; do not allow spillage or migration onto adjoining surfaces.

3.3 INSTALLATION OF JOINT SEALANTS

A. General: Comply with joint-sealant manufacturer's written installation instructions for products and applications indicated, unless more stringent requirements apply.

B. Sealant Installation Standard: Comply with recommendations in ASTM C 1193 for use of joint sealants as applicable to materials, applications, and conditions indicated.

C. Install sealants using proven techniques that comply with the following and at the same time backings are installed:

1. Place sealants so they directly contact and fully wet joint substrates.
2. Completely fill recesses provided for each joint configuration.
3. Produce uniform, cross-sectional shapes and depths relative to joint widths that allow optimum sealant movement capability.

D. Tooling of Nonsag Sealants: Immediately after sealant application and before skinning or curing begins, tool sealants according to requirements specified below to form smooth, uniform beads of configuration indicated; to eliminate air pockets; and to ensure contact and adhesion of sealant with sides of joint.

1. Remove excess sealants from surfaces adjacent to joint.
2. Use tooling agents that are approved in writing by joint-sealant manufacturer and that do not discolor sealants or adjacent surfaces.

E. Provide joint configuration to comply with joint-sealant manufacturer's written instructions, unless otherwise indicated.

F. Provide recessed joint configuration for silicone sealants of recess depth and at locations indicated.

3.4 CLEANING

A. Clean off excess sealants or sealant smears adjacent to joints as the Work progresses by methods and with cleaning materials approved by manufacturers of joint sealants and of products in which joints occur.

3.5 PROTECTION

A. Protect joint sealants during and after curing period from contact with contaminating substances and from damage resulting from construction operations or other causes so sealants are without deterioration or damage at time of Substantial Completion. If, despite such protection, damage or deterioration occurs, cut out and remove damaged or deteriorated joint sealants immediately and replace with joint sealant so installations with repaired areas are indistinguishable from the original work.

END OF SECTION 321373

SECTION 321443 - POROUS UNIT PAVING

PART 1 - GENERAL

RELATED DOCUMENTS

A. Drawings and general provisions of the Contract, including General and Supplementary Conditions and Division 01 Specification Sections, apply to this Section.

SUMMARY

B. Section Includes:

1. Solid concrete pavers with openings between pavers filled with aggregate.
2. Aggregate setting bed for pavers.

C. Related Requirements:

1. Division 31 Section "Earth Moving" for excavation and compacted subgrade.
2. Division 32 Section "Concrete Paving" for cast-in-place concrete curbs that serve as edge restraints for porous paving.

DEFINITIONS

D. Base Course: Layer of open-graded, crushed and washed aggregate beneath the bedding course layer, comprised of small to medium-particle sized stone (#57's)

E. Bedding Course: Layer of open-graded, crushed and washed aggregate directly beneath the unit pavers, comprised of small particle sized stone chips (#8's or #9's). Also commonly called the setting bed.

F. Bundle: Several layers of paver cluster stacked vertically, banded, and tagged for shipment. Also commonly called a cube.

G. Chamfer: a 45-degree beveled edge around the top of a paver unit, usually 1/8" or less. It facilitates snow removal, helps prevent edge chipping, delineates the paving's individual units.

H. Cluster: the group of pavers forming a single layer from a bundle of pavers or the group of pavers held by a clamp of a paver laying machine.

I. Flats: The portion of the side faces of a paver other that the spacer bars.

J. Joint Filler: Washed angular chips (# 11) crushed stone.

K. Laying Face: The working edge of the pavement where the laying of pavers is occurring.

L. Mechanical Installation: The use of specialized machines to lift clusters of pavers from bundles and place them on the prepared bedding course.

M. Method Statement: The paver installer's and manufacturer's plan for construction and quality control of the pavers.

N. Spacer Bars: Small protrusions on each side of pavers which are used to keep them uniformly spaced while minimizing chipping and spalling. Mechanically installed pavers must have spacer bars.

O. Sub-base Course: Layer of open graded crushed aggregate beneath the base course layer, comprised of large particle-sized stone (#2's).

P. Sub-grade: Native soil at an excavated depth where underdrain will be placed.

Q. Void Filler: Washed angular chips (#11's) crushed stone.

R. Wearing Course: the top surface of the paver surrounded by a chamfer.

PREINSTALLATION MEETINGS

S. Preinstallation Conference: Conduct conference at Project site.

ACTION SUBMITTALS

T. Product Data: For materials other than aggregates.

U. Product Data: For the following:

1. Pavers.

V. Sieve Analyses: For aggregate materials, according to ASTM C 136.

W. Samples:

1. Full-size units of each type of unit paver indicated.
2. Aggregate fill.
3. Aggregate setting bed materials.

INFORMATIONAL SUBMITTALS

X. Material Certificates: For unit pavers. Include statements of material properties indicating compliance with requirements, including compliance with standards. Provide for each type and size of unit.

Y. Product Test Reports: Based on evaluation of comprehensive tests performed by a qualified testing agency, for unit pavers, indicating compliance with requirements.

1. For solid interlocking paving units, include test data for freezing and thawing according to ASTM C 67.

QUALITY ASSURANCE

Z. Mockups: Build mockups to verify selections made under Sample submittals and to demonstrate aesthetic effects and set quality standards for materials and execution.

1. Approval of mockups does not constitute approval of deviations from the Contract Documents contained in mockups unless Architect specifically approves such deviations in writing.
2. Subject to compliance with requirements, approved mockups may become part of the completed Work if undisturbed at time of Substantial Completion.

AA. Quality Control Plan: The installer and manufacturer shall establish, provide and maintain a quality control plan. The quality control plan shall provide reasonable assurance that the materials and completed construction submitted for acceptance will conform to the contract requirements. Although guidelines are established and certain requirements are specified, they are minimal, and the installer and manufacturer shall assume full responsibility for meeting all requirements. The installer and manufacturer shall agree upon a method for measuring the clusters at the factory and in the field. That method shall be submitted in writing to the owner for approval. The Quality Control Plan shall contain at a minimum, but not limited to, the following elements:

1. The manufacturer's quality control procedures.
2. The manufacturer's production records showing at a minimum the date of manufacture, a mix design designation, mold number, mold cycles, and sequential pallet numbers. Copies of such records shall be made available to the owner upon request.
3. A description of the anticipated growth in the cluster size and a plan for managing the growth so as to not interfere with placement by paving machine(s), if mechanically installed.
4. The installer's quality control procedures, including but not limited to, dimensional control methods, paving machine(s) head adjustment,
5. Typical daily work schedule to insure that all pavers placed on the bedding course on any given day are adjusted as required, cut and vibrated, and installation of void filler completed at the end of that work day.
6. Provision for identifying and recording actual daily production and the bundle numbers of pavers used in each day's installation.

BB. Sampling and Testing: The manufacturer shall employ an independent testing company, qualified to undertake tests in accordance with the applicable standards specified herein. Test results shall be provided to the installer and the owner, upon request. Pavers shall be checked for density and dimensional variation, compressive strength (ASTM C140), density and absorption (ASTM C140) and abrasion resistance (ASTM C418).

1. The initial testing frequency shall be one set of tests for each 100,000 full-sized pavers delivered to the site or at any time a change in the manufacturing process, mix design, cement, aggregate or other material occurs.
2. The following number of full-sized pavers shall be randomly sampled for each test: five (5) for dimensional variation; three (3) for density and absorption; three (3) for compressive strength; and three (3) for abrasion resistance.
3. If all pavers tested pass all requirements for a sequence of 400,000 pavers, and then the testing frequency may be relaxed to one set of tests for each 200,000 full-sized pavers. If any pavers fail any of the required tests, then the testing frequency shall revert to the initial testing frequency.
4. When any of the individual test results fail to meet the specified requirements, the cluster of pavers represented by that test sample shall be rejected. The manufacturer shall provide additional testing from both before and after the rejected test sample to

determine the sequence of the paver production run that should be considered unacceptable.

5. Additional testing, as described above, shall be carried out at no additional expense to the owner. The sequence of pavers found to be defective shall, if they have been delivered to the site, be removed from the site promptly at no expense to the owner or installer.
6. Pavers shall be sound and free from defects that would interfere with the proper placing of the pavers or impair the strength or performance of the construction.

CC. Method Statement: The installer and manufacturer shall prepare a Method Statement describing the overall plan to complete the work. This plan shall include at a minimum:

1. The quality control plan.
2. A description of the anticipated mold life, rate and effect of mold wear on pavers produced, individual mold runs, and a mold rotation plan.
3. Clear diagrams showing the proposed starting point of the installation, the proposed direction of installation, progress on a week-by-week basis, and the dimensional controls to be used to maintain specified joint width and straight joint lines.
4. A method of measuring the clusters at the factory and in the field.
5. A description of the anticipated growth in cluster size due to mold wear and a plan for dealing with that growth or other dimensional variances.
6. A description and the personnel and equipment to be employed for each portion of the work including manufacture, installation and quality control.
7. The manufacturer's proposed production rate and mold life for this project and supply data demonstrating experience on similar past projects. Installer shall state the proposed installation rate.
8. The installer's intention to machine-lay or hand-lay the pavers and provide qualifying experience to date for the appropriate method of proposed installation.

DD. Qualifications: Every manufacturer and installer shall demonstrate that they have supplied and/or installed ecological permeable pavers for projects of a similar nature. The installer shall complete and submit the Paver Installation History Form with their sealed bid, without exception. No bid shall be considered where the installer does not meet the minimum experience requirements, as determined by the accuracy of the information provided in the Paver Installation History Form.

EE. Paver Manufacturer's Qualifications

1. The manufacturer shall demonstrate a minimum of 5 years successful experience in the manufacture of interlocking concrete block pavers.
2. The manufacturer shall have sufficient production capacity and established quality control procedures to produce, transport, and deliver the required number of pavers with the quality specified, without causing a delay to the work.
3. The manufacturer shall have suitably experienced personnel and a management capability sufficient to produce the number of quality pavers as depicted on the contract drawings and as specified herein.

FF. Paver Installer's Qualifications

1. Paver installers shall be required to provide their installation history, including references in writing with contact information for a minimum of 100,000 sf in total of ecological permeable pavers installed.
2. The installer shall have suitably experienced personnel and a management capability sufficient to execute the work shown on the contract drawings and specified herein.
3. The installer's foreman shall demonstrate, including references, a minimum of 5 years experience in the installation of unit paver systems similar in size and nature to this project.

4. Contractor must demonstrate in writing if the mechanical installation utilized (as referenced in past projects) is similar in scope to the work being bid.

DELIVERY, STORAGE, AND HANDLING

GG. Store pavers on elevated platforms in a dry location. If units are not stored in an enclosed location, cover tops and sides of stacks with waterproof sheeting, securely tied. The project name and phase for which the pavers were manufactured and the sequential bundle number shall be marked on each paver bundle.

HH. All pavers shall be delivered to the site in approximately the chronological order in which they were manufactured. They shall be staged on-site, as per the method statement.

II. Store aggregates where grading and other required characteristics can be maintained and contamination can be avoided.

PART 2 - PRODUCTS

CONCRETE UNIT PAVERS

A. Pavers have been salvaged from demolition of the former Baseball Stadium. These salvaged pavers shall be installed to complete the pattern of the remaining pavers left in place at the entrance plaza to the outdoor track facility. Contractor shall notify the Landscape Architect within 30 days following award of contract if there appears to be a shortage of salvaged pavers to complete the project as designed.

AGGREGATE MATERIALS

B. Graded & Washed Aggregate for Subbase: Existing crushed stone or gravel for subbase shall be used in areas remaining from former permeable paver installation at former baseball stadium. New areas of permeable pavers shall be constructed with new subbase crushed stone complying with ASTM D 448 for Size No. 2.

C. Graded & Washed Aggregate for Base Course: Existing crushed stone or gravel for base shall be used in areas remaining from former permeable paver installation at former baseball stadium. New areas of permeable pavers shall be constructed with new base crushed stone complying with ASTM D 448 for Size No. 57.

D. Graded & Washed Aggregate Setting Bed: Existing crushed stone or gravel for setting bed may be used in areas remaining from former permeable paver installation at former baseball stadium, **IF it is clean**. Areas that are not clean shall receive new clean No. 8 or 9 washed crushed stone. New areas of permeable pavers shall be constructed with new setting bed of washed crushed stone complying with ASTM D 448 for Size No. 8 or No. 9.

2.2 FILL MATERIALS

A. Graded & Washed Aggregate for Joints and Voids Fill: Sound crushed stone or gravel complying with ASTM D 448 for **Size No. 11**.

MISCELLANEOUS MATERIALS

B. Geotextile fabric: KYDOH type IV soil separator.

PART 3 - EXECUTION

PREPARATION

A. Proof-roll prepared subgrade according to requirements in Division 31 Section "Earth Moving" to identify soft pockets and areas of excess yielding. Proceed with porous paver installation only after deficient subgrades have been corrected and are ready to receive subbase and base course for porous paving.

INSTALLATION, GENERAL

B. Do not use unit pavers with chips, cracks, voids, discolorations, and other defects that might be structurally unsound or visible in finished work.

C. Cut unit pavers with motor-driven masonry saw equipment to provide clean, sharp, unchipped edges. Cut units to provide pattern indicated and to fit adjoining work neatly. Use full units without cutting where possible. Hammer cutting is not acceptable.

D. Tolerances:

1. Variation in Plane between Adjacent Units (Lipping): Do not exceed 1/16-inch (1.5-mm) unit-to-unit offset from flush.
2. Variation from Level or Indicated Slope: Do not exceed 1/8 inch in 24 inches (3 mm in 600 mm) and 1/4 inch in 10 feet (6 mm in 3 m) or a maximum of 1/2 inch (13 mm).

E. Provide curbs as indicated. Install curbs before placing unit pavers.

1. Install concrete curbs on a bedding of compacted base-course material over compacted subgrade. Install curbs before placing base course for pavers. Set curbs at elevations indicated, accurately aligned, and place and compact base-course material behind curbs as indicated.

SUB-BASE COURSE INSTALLATION

F. Compact soil subgrade uniformly to at least 95 percent of ASTM D 698 laboratory density.

G. Proof-roll prepared subgrade to identify soft pockets and areas of excess yielding. Excavate soft spots, unsatisfactory soils, and areas of excessive pumping or rutting, as determined by Geotechnical Engineer, and replace with compacted backfill or fill as directed.

H. Install geotextile fabric over entire subgrade of permeable paver areas.

I. Sub-base aggregate course shall consist of a minimum thickness of twelve inches (12”) of washed #2 crushed stone and be compacted using a vibratory 10-15 ton smooth-drum roller. Sub-base shall be installed in lifts not to exceed six inches (6”). Upon completion of the sub-base course installation, the area shall be proof-rolled using a loaded tandem truck to identify

any areas requiring additional compaction. The sub-base course shall be installed to the elevation and cross-section per the plan documents.

J. Inspection:
   1. In-place density of the sub-base to be tested by the Contractor's Geotechnical Engineer. In-place density to be 95% of the laboratory density established for the sub-base stone.
   2. Contractor to notify sub-base installer, geotechnical engineer, landscape architect, porous unit paving supplier, porous unit paver installer and owner's representative upon completion of the stone sub-base for inspection and approval.

BASE COURSE INSTALLATION

K. The base course shall consist of a thickness of 8" of washed #57 crushed stone, placed in one lift. Compact using a vibratory 10-15 ton smooth-drum roller. The base course shall be installed to the elevation and cross section per the plan documents (+/- ½").

BEDDING COURSE INSTALLATION

L. The bedding course of washed #8 or #9 crushed stone shall be spread loose in a uniform layer to provide a depth after compaction of the paving units of 2". The Contractor shall screed the bedding course using either and approved mechanical screed apparatus of by the use of screed guides and boards.

M. The screeded bedding aggregate shall not be subjected to any traffic by either mechanical equipment or pedestrian use prior to the installation of the paver units. The voids left after the removal of the screed rails shall be filled with loose aggregate as the paver bedding course proceeds.

PAVER INSTALLATION

N. All edge restraints shall be constructed as shown on the plans and in place prior to the installation of the pavers and base course.

O. The pavers shall be installed in approximately the order in which they were manufactured. No cluster shall be installed next to a cluster that was manufactured more than 1,000 cycles before or after.

P. Lay pavers in the pattern as shown on the drawings. Lay pavers away from the existing laying face or edge restraint in such a manner as to ensure that the pattern remains square. Chalk lines shall be used upon the bedding course to maintain straight joint lines. Joint spacing between pavers shall be ¼"; however, the joint width may need to be increased to 3/8" (if necessary) to maintain straight joint lines. Lines and grades shown on the plans shall be established and maintained during the installation of the ecological permeable pavers.

Q. Pavers shall be cut using a masonry saw. Block splitting shall not be permitted. All cut faces shall be vertical. Dry cutting of the pavers shall be performed utilizing a dust collection system. If wet cutting method used, paver surface must be washed while still wet to remove cement dust and slurry.

R. Once the pavers have been placed upon the bedding course and all cut pavers have been inserted to provide a full and complete surface, inspect the pavers for damaged units and remove and replace those units. Once all pattern lines have been straightened, initially compact

the pavers and then place washed #11 crushed stone void filler into the paver openings to the top of the chamfer on the pavers and the surface swept broom clean.

S. The pavement surface shall be compacted to achieve consolidation of the bedding course and paving stones and brought to design levels and profiles by two passes of a suitable plate compactor. Compaction of the pavers shall be accomplished by the use of a vibratory plate compactor capable of a minimum of 5,000 pounds of compaction force. No compaction shall be permitted within five feet (5') of unrestrained edges of the pavement.

T. On completion of vibration after void filling, after compaction, inspect the pavers for damaged units and remove and replace those units. The surface tolerances shall be plus or minus ½" from finish levels and the pavers shall be flush to ¼" above edge restraints.

U. Additional washed #11crushed stone void filler material shall be swept in the paver voids to within ½" from the bottom of the chamfer on the paving stones. Upon completion, the wearing course surface shall be swept clean of all excess materials. Remove from the site all surplus materials, equipment and debris resulting from these operations.

V. As work progresses, remove and replace pavers that are loose, chipped, broken, stained, or otherwise damaged or that do not match adjoining units. Provide new units to match adjoining units and install in same manner as original units, with same joint treatment and with no evidence of replacement.

MAINTENANCE AND PROTECTION

W. Contractor shall maintain paver voids and stone clean and open.

X. Contractor shall protect pavers after installation. Any material stored or dumped onto the pavers after installation shall be underlain with non-woven geotextile filter fabric.

END OF SECTION 321443

SECTION 32 3113 - CHAIN LINK FENCES AND GATES

PART 1 - GENERAL

1.1 RELATED DOCUMENTS

A. Drawings and general provisions of the Contract, including General and Supplementary Conditions and Division 01 Specification Sections, apply to this Section.

1.2 SUMMARY

A. Section Includes:

1. Chain-link fences.
2. Swing gates.

B. Related Requirements:

1. Section 03 3000 "Cast-in-Place Concrete" for cast-in-place concrete post footings.

1.3 ACTION SUBMITTALS

A. Product Data: For each type of product.

1. Include construction details, material descriptions, dimensions of individual components and profiles, and finishes for the following:

a. Fence and gate posts, rails, and fittings.
b. Chain-link fabric, reinforcements, and attachments.
c. Gates and hardware.
d. Gate operators, including operating instructions and motor characteristics.

B. Shop Drawings: For each type of fence and gate assembly.

1. Include plans, elevations, sections, details, and attachments to other work.
2. Include accessories, hardware, gate operation, and operational clearances.
3. Gate Operator: Show locations and details for installing operator components, switches, and controls. Indicate motor size, electrical characteristics, drive arrangement, mounting, and grounding provisions.
4. Wiring Diagrams: For power, signal, and control wiring.

C. Samples for Initial Selection: For each type of factory-applied finish.

D. Samples for Verification: For each type of component with factory-applied finish, prepared on Samples of size indicated below:

1. Polymer-Coated Components: In 6-inch lengths for components and on full-sized units for accessories.

E. Delegated-Design Submittal: For structural performance of chain-link fence and gate frameworks, including analysis data signed and sealed by the qualified professional engineer responsible for their preparation.

1.4 INFORMATIONAL SUBMITTALS

A. Qualification Data: For professional engineer.

B. Product Certificates: For each type of chain-link fence, and gate.

C. Product Test Reports: For framework strength according to ASTM F1043, for tests performed by manufacturer and witnessed by a qualified testing agency.

D. Sample Warranty: For special warranty.

1.5 QUALITY ASSURANCE

A. Testing Agency Qualifications: For testing fence grounding; member company of NETA or an NRTL.

1. Testing Agency's Field Supervisor: Certified by NETA to supervise on-site testing.

B. Emergency Access Requirements: According to requirements of authorities having jurisdiction for gates with automatic gate operators serving as a required means of access.

1.6 FIELD CONDITIONS

A. Field Measurements: Verify layout information for chain-link fences and gates shown on Drawings in relation to property survey and existing structures. Verify dimensions by field measurements.

1.7 WARRANTY

A. Special Warranty: Manufacturer agrees to repair or replace components of chain-link fences and gates that fail in materials or workmanship within specified warranty period.

1. Failures include, but are not limited to, the following:

a. Failure to comply with performance requirements.
b. Deterioration of metals, metal finishes, and other materials beyond normal weathering.
c. Faulty operation of gate.

2. Warranty Period: Five years from date of Substantial Completion.

PART 2 - PRODUCTS

2.1 PERFORMANCE REQUIREMENTS

A. Delegated Design: Engage a qualified professional engineer, as defined in Section 01 4000 "Quality Requirements," to design chain-link fence and gate frameworks.

B. Structural Performance: Chain-link fence and gate frameworks shall withstand the design wind loads and stresses for fence height(s) and under exposure conditions indicated according to ASCE/SEI 7.

1. Design Wind Load: [**As indicated on Drawings**] <**Insert loads**>.

a. Minimum Post Size: Determine according to ASTM F1043 for post spacing not to exceed 10 feet for Material Group IA, ASTM F1043, Schedule 40 steel pipe.
b. Minimum Post Size and Maximum Spacing: Determine according to CLFMI WLG 2445, based on mesh size and pattern specified.

2.2 CHAIN-LINK FENCE FABRIC

A. General: Provide fabric in one-piece heights measured between top and bottom of outer edge of selvage knuckle or twist according to "CLFMI Product Manual" and requirements indicated below:

1. Fabric Height: As indicated on Drawings.
2. Steel Wire for Fabric: Wire diameter of 0.192 inch.

a. Mesh Size: 2 inches.
b. Polymer-Coated Fabric: ASTM F668, [**Class 1**] [**Class 2a**] [**Class 2b**] over zinc-coated steel wire.

1) Color: As selected by Architect from manufacturer's full range, according to ASTM F934.

c. Coat selvage ends of metallic-coated fabric before the weaving process with manufacturer's standard clear protective coating.

3. Selvage: Twisted top and knuckled bottom.

2.3 FENCE FRAMEWORK

A. Posts and Rails: ASTM F1043 for framework, including rails, braces, and line; terminal; and corner posts. Provide members with minimum dimensions and wall thickness according to ASTM F1043 or ASTM F1083 based on the following:

1. Fence Height: As indicated on Drawings.

2. Heavy-Industrial-Strength Material: Group IA, round steel pipe, Schedule 40.

a. Line Post: 6.625 inches in diameter.
b. End, Corner, and Pull Posts: 6.625 inches in diameter.

3. Horizontal Framework Members: Intermediate, top, and bottom rails according to ASTM F1043.

    a. Top Rail: 1.25 by 1.63 inches.

4. Brace Rails: ASTM F1043.
5. Metallic Coating for Steel Framework:

    a. Type A: Not less than minimum 2.0-oz./sq. ft. average zinc coating according to ASTM A123/A123M or 4.0-oz./sq. ft. zinc coating according to ASTM A653/A653M.
    b. Type B: Zinc with organic overcoat, consisting of a minimum of 0.9 oz./sq. ft. of zinc after welding, a chromate conversion coating, and a clear, verifiable polymer film.
    c. External, Type B: Zinc with organic overcoat, consisting of a minimum of 0.9 oz./sq. ft. of zinc after welding, a chromate conversion coating, and a clear, verifiable polymer film. Internal, Type D, consisting of 81 percent, not less than 0.3-mil-thick, zinc-pigmented coating.
    d. Type C: Zn-5-Al-MM alloy, consisting of not less than 1.8-oz./sq. ft. coating.
    e. Coatings: Any coating above.

6. Polymer coating over metallic coating.

    a. Color: As selected by Architect from manufacturer's full range, according to ASTM F934.

2.4 TENSION WIRE

A. Metallic-Coated Steel Wire: 0.177-inch-diameter, marcelled tension wire according to ASTM A817 or ASTM A824, with the following metallic coating:
    1. Type II: Zinc coated (galvanized) by hot-dip process, with the following minimum coating weight:
        a. Matching chain-link fabric coating weight.

B. Polymer-Coated Steel Wire: 0.177-inch- diameter, tension wire according to ASTM F1664, [**Class 1**] [**Class 2a**] [**Class 2b**] over zinc-coated steel wire.

    1. Color: Match chain-link fabric, according to ASTM F934.

2.5 SWING GATES

A. General: ASTM F900 for gate posts and single swing gate types.

    1. Gate Leaf Width: 36 inches.
    2. Framework Member Sizes and Strength: Based on gate fabric height of more than 72 inches.

B. Pipe and Tubing:

    1. Zinc-Coated Steel: ASTM F1043 and ASTM F1083; protective coating and finish to match fence framework.
    2. Gate Posts: Round tubular steel.
    3. Gate Frames and Bracing: Round tubular steel.

C. Frame Corner Construction: Welded.

D. Hardware:

1. Hinges: 360-degree inward and outward swing.
2. Latch: Permitting operation from both sides of gate with provision for padlocking accessible from both sides of gate.

2.6 FITTINGS

A. Provide fittings according to ASTM F626.

B. Rail and Brace Ends: For each gate, corner, pull, and end post.

C. Rail Fittings: Provide the following:

1. Top Rail Sleeves: Pressed-steel or round-steel tubing not less than 6 inches long.
2. Rail Clamps: Line and corner boulevard clamps for connecting intermediate and bottom rails to posts.

D. Tension and Brace Bands: Pressed steel.

E. Tension Bars: Steel, length not less than 2 inches shorter than full height of chain-link fabric. Provide one bar for each gate and end post, and two for each corner and pull post, unless fabric is integrally woven into post.

F. Truss Rod Assemblies: Steel, hot-dip galvanized after threading rod and turnbuckle or other means of adjustment.

G. Tie Wires, Clips, and Fasteners: According to ASTM F626.

1. Standard Round Wire Ties: For attaching chain-link fabric to posts, rails, and frames, according to the following:

a. Hot-Dip Galvanized Steel: 0.148-inch- diameter wire; galvanized coating thickness matching coating thickness of chain-link fence fabric.

H. Finish:

1. Metallic Coating for Pressed Steel or Cast Iron: Not less than 1.2 oz./sq. ft. of zinc.

a. Polymer coating over metallic coating.

2.7 GROUT AND ANCHORING CEMENT

A. Nonshrink, Nonmetallic Grout: Factory-packaged, nonstaining, noncorrosive, nongaseous grout complying with ASTM C1107/C1107M. Provide grout, recommended in writing by manufacturer, for exterior applications.

B. Anchoring Cement: Factory-packaged, nonshrink, nonstaining, hydraulic-controlled expansion cement formulation for mixing with water at Project site to create pourable anchoring, patching, and grouting compound. Provide formulation that is resistant to erosion from water exposure

without needing protection by a sealer or waterproof coating, and that is recommended in writing by manufacturer for exterior applications.

PART 3 - EXECUTION

3.1 EXAMINATION

A. Examine areas and conditions, with Installer present, for compliance with requirements for site clearing, earthwork, pavement work, and other conditions affecting performance of the Work.

B. Proceed with installation only after unsatisfactory conditions have been corrected.

3.2 PREPARATION

A. Stake locations of fence lines, gates, and terminal posts. Do not exceed intervals of 500 feet or line of sight between stakes. Indicate locations of utilities, lawn sprinkler system, underground structures, benchmarks, and property monuments.

3.3 CHAIN-LINK FENCE INSTALLATION

A. Install chain-link fencing according to ASTM F567 and more stringent requirements specified.

1. Install fencing on established boundary lines inside property line.

B. Post Excavation: Drill or hand-excavate holes for posts to diameters and spacings indicated, in firm, undisturbed soil.

C. Post Setting: Set posts in concrete at indicated spacing into firm, undisturbed soil.

1. Verify that posts are set plumb, aligned, and at correct height and spacing, and hold in position during setting with concrete or mechanical devices.
2. Concrete Fill: Place concrete around posts to dimensions indicated and vibrate or tamp for consolidation. Protect aboveground portion of posts from concrete splatter.

   a. Exposed Concrete: Extend 2 inches above grade; shape and smooth to shed water.
   b. Concealed Concrete: Place top of concrete 2 inches below grade as indicated on Drawings to allow covering with surface material.

D. Line Posts: Space line posts uniformly at 96 inches o.c.

E. Post Bracing and Intermediate Rails: Install according to ASTM F567, maintaining plumb position and alignment of fence posts. Diagonally brace terminal posts to adjacent line posts with truss rods and turnbuckles. Install braces at end and gate posts and at both sides of corner and pull posts.

1. Locate horizontal braces at midheight of fabric 72 inches or higher, on fences with top rail, and at two-third fabric height on fences without top rail. Install so posts are plumb when diagonal rod is under proper tension.

F. Tension Wire: Install according to ASTM F567, maintaining plumb position and alignment of fence posts. Pull wire taut, without sags. Fasten fabric to tension wire with 0.120-inch-diameter hog rings of same material and finish as fabric wire, spaced a maximum of 24 inches o.c. Install tension wire in locations indicated before stretching fabric. Provide horizontal tension wire at the following locations:

1. Extended along top and bottom of fence fabric. Install top tension wire through post cap loops. Install bottom tension wire within 6 inches of bottom of fabric and tie to each post with not less than same diameter and type of wire.

G. Top Rail: Install according to ASTM F567, maintaining plumb position and alignment of fence posts. Run rail continuously through line post caps, bending to radius for curved runs and terminating into rail end attached to posts or post caps fabricated to receive rail at terminal posts. Provide expansion couplings as recommended in writing by fencing manufacturer.

H. Intermediate and Bottom Rails: Secure to posts with fittings.

I. Chain-Link Fabric: Apply fabric to outside of enclosing framework. Leave 1-inch bottom clearance between finish grade or surface and bottom selvage unless otherwise indicated. Pull fabric taut and tie to posts, rails, and tension wires. Anchor to framework so fabric remains under tension after pulling force is released.

J. Tension or Stretcher Bars: Thread through fabric and secure to end, corner, pull, and gate posts, with tension bands spaced not more than 15 inches o.c.

K. Tie Wires: Use wire of proper length to firmly secure fabric to line posts and rails. Attach wire at one end to chain-link fabric, wrap wire around post a minimum of 180 degrees, and attach other end to chain-link fabric according to ASTM F626. Bend ends of wire to minimize hazard to individuals and clothing.

1. Maximum Spacing: Tie fabric to line posts at 12 inches o.c. and to braces at 24 inches o.c.

L. Fasteners: Install nuts for tension bands and carriage bolts on the side of fence opposite the fabric side.

3.4 GATE INSTALLATION

A. Install gates according to manufacturer's written instructions, level, plumb, and secure for full opening without interference. Attach fabric as for fencing. Attach hardware using tamper-resistant or concealed means. Install ground-set items in concrete for anchorage. Adjust hardware for smooth operation.

3.5 ADJUSTING

A. Gates: Adjust gates to operate smoothly, easily, and quietly, free of binding, warp, excessive deflection, distortion, nonalignment, misplacement, disruption, or malfunction, throughout entire operational range. Confirm that latches and locks engage accurately and securely without forcing or binding.

B. Lubricate hardware and other moving parts.

3.6 DEMONSTRATION

A. Engage a factory-authorized service representative to train Owner's maintenance personnel to adjust, operate, and maintain chain-link fences and gates.

END OF SECTION 32 3113

SECTION 323119 - DECORATIVE METAL FENCES AND GATES

PART 1 - GENERAL

1.1 RELATED DOCUMENTS

A. Drawings and general provisions of the Contract, including General and Supplementary Conditions and Division 01 Specification Sections, apply to this Section.

1.2 SUMMARY

A. Section Includes:
   1. Decorative steel fences.
   2. Swing gates.

B. Related Sections:

   1. Division 03 Section "Miscellaneous Cast-in-Place Concrete" for concrete post footings.

1.3 ACTION SUBMITTALS

A. Product Data: For each type of product indicated.

B. Shop Drawings: For gates. Include plans, elevations, sections, details, and attachments to other work.

C. Samples: For each fence material and for each color specified.

   1. Provide Samples 12 inches in length for linear materials.

1.4 QUALITY ASSURANCE

A. Preinstallation Conference: Conduct conference at Project site.

PART 2 - PRODUCTS

2.1 EXISTING ORNAMENTAL STEEL FENCE

A. Fence currently exists to enclose the former Baseball Stadium. Portions of this existing fence should provide enough material to complete the newly designed fence layout. If it is not, the Majestic style, Montage Commercial form with an 8’ height fence by Ameristar, may be used also.

2.2 MISCELLANEOUS MATERIALS

A. Concrete: Normal-weight, air-entrained, ready-mix concrete complying with requirements in Division 03 Section "Miscellaneous Cast-in-Place Concrete" with a minimum 28-day compressive strength of 3000 psi, 3-inch slump, and 1-inch maximum aggregate size.

B. Nonshrink Grout: Factory-packaged, nonstaining, noncorrosive, nongaseous grout complying with ASTM C 1107 and specifically recommended by manufacturer for exterior applications.

2.3 SWING GATES

A. Gate Configuration: Provide new gates to dimensions indicated, if existing gates do not meet the design intent.

B. Gate Frame Height: 96 inches.

C. Gate Opening Width: As indicated.

D. Galvanized-Steel Frames and Bracing: Fabricate members from channels (1-1/2 by 1/2 inches) and tubes (sized as appropriate for gate leaf) formed from 0.108-inch nominal-thickness, metallic-coated steel sheet or formed from 0.105-inch nominal-thickness steel sheet and hot-dip galvanized after fabrication.

E. Frame Corner Construction: Welded or assembled with corner fittings.

F. Additional Rails: Provide as indicated, complying with requirements for fence rails.

G. Infill: Comply with requirements for adjacent fence.

H. Picket Size, Configuration, and Spacing: Comply with requirements for adjacent fence.

I. Hardware: Latches permitting operation from both sides of gate, hinges, and keepers for pedestrian gate and Gate ‘B’. Provide center gate stop and cane bolt for Gate ‘B’.

J. Hinges: BHMA A156.1, Grade 1, suitable for exterior use.

1. Function: 39 - Full surface, triple weight, antifriction bearing.
2. Material: Wrought steel, forged steel, cast steel, or malleable iron.

K. Finish exposed welds to comply with NOMMA Guideline 1, Finish #2 - completely sanded joint, some undercutting and pinholes okay.

L. Steel Finish: Epoxy Primed with Polyurethane top coat.

2.4 STEEL FINISHES

A. High-Performance Coating: Apply epoxy intermediate and polyurethane topcoats to prime-coated surfaces. Comply with coating manufacturer's written instructions and with requirements in SSPC-PA 1, "Paint Application Specification No. 1: Shop, Field, and Maintenance Painting of Steel," for shop painting. Apply at spreading rates recommended by coating manufacturer.

1. Match existing fence around the outdoor track complex for color, texture, and coverage. Remove and refinish, or recoat work that does not comply with specified requirements.

PART 3 - EXECUTION

3.1 EXAMINATION

A. Examine areas and conditions, with Installer present, for compliance with requirements for site clearing, earthwork, pavement work, construction layout, and other conditions affecting performance of the Work.

B. Proceed with installation only after unsatisfactory conditions have been corrected.

3.2 PREPARATION

A. Identify locations of utilities, lawn sprinkler system, underground structures, benchmarks, and property monuments.

3.3 DECORATIVE FENCE INSTALLATION

A. Install fence section by section as existing fence is removed in order to maintain a secure perimeter around the outdoor track at all times.

B. Install fences by setting posts as indicated and fastening rails and infill panels to posts. Peen threads of bolts after assembly to prevent removal.

C. Post Excavation: Drill or hand-excavate holes for posts in firm, undisturbed soil. Excavate holes to a diameter of 12 inches and a depth of not less than 36 inches.

D. Post Setting: Set posts in concrete with mechanical anchors at indicated spacing into firm, undisturbed soil.

1. Verify that posts are set plumb, aligned, and at correct height and spacing, and hold in position during setting with concrete or mechanical devices.
2. Concrete Fill: Place concrete around posts and vibrate or tamp for consolidation. Protect aboveground portion of posts from concrete splatter.
   a. Concealed Concrete: Top 2 inches below grade to allow covering with surface material. Slope top surface of concrete to drain water away from post.

3.4 GATE INSTALLATION

A. Install gates level, plumb, and secure for full opening without interference. Attach hardware using tamper-resistant or concealed means. Install ground-set items in concrete for anchorage. Adjust hardware for smooth operation and lubricate where necessary.

3.5 GATE OPERATOR INSTALLATION

A. General: Gate operator is installed by Others. Coordinate with other contractor for fully functioning gate.

3.6 ADJUSTING

A. Gates: Adjust gates to operate smoothly, easily, and quietly, free of binding, warp, excessive deflection, distortion, nonalignment, misplacement, disruption, or malfunction, throughout entire operational range. Confirm that latches and locks engage accurately and securely without forcing or binding.

B. Lubricate hardware and other moving parts.

3.7 DEMONSTRATION

A. Train Owner's personnel to adjust, operate, and maintain gates.

END OF SECTION 323119

SECTION 329200 - TURF AND GRASSES

PART 1 - GENERAL

1.1 RELATED DOCUMENTS

A. Drawings and general provisions of the Contract, including General and Supplementary Conditions and Division 1 Specification Sections, apply to this Section.

1.2 SUMMARY

A. This Section includes the following:

1. Hydroseeding for temporary stabilization.

2. Erosion control blankets.

3. Sodding for all permanent lawns.

B. Related Sections include the following:
1. Section 312000 "Earth Moving" for excavation, filling and backfilling, and rough grading.

1.3 DEFINITIONS

A. Finish Grade: Elevation of finished surface of planting soil.

B. Manufactured Soil: Soil produced off-site by homogeneously blending mineral soils or sand with stabilized organic soil amendments to produce topsoil or planting soil.

C. Planting Soil: Native or imported topsoil, manufactured topsoil, or surface soil modified to become topsoil; mixed with soil amendments.

D. Subgrade: Surface or elevation of subsoil remaining after completing excavation, or top surface of a fill or backfill immediately beneath planting soil.

1.4 SUBMITTALS

A. Product Data: For each type of product indicated.

B. Certification of Grass Seed: From seed vendor for each grass-seed monostand or mixture stating the botanical and common name and percentage by weight of each species and variety, and percentage of purity, germination, and weed seed. Include the year of production and date of packaging.

1. Certification of each seed mixture for sod, identifying source, including name and telephone number of supplier.

C. Product Certificates: For soil amendments and fertilizers, signed by product manufacturer.

D. Qualification Data: For landscape Installer.

E. Material Test Reports: For existing surface soil and imported topsoil.

F. Planting Schedule: Indicating anticipated planting dates for each type of planting.

G. Maintenance Instructions: Recommended procedures to be established by Owner for maintenance of lawns during a calendar year. Submit before expiration of required maintenance periods.

1.5 QUALITY ASSURANCE

A. Installer Qualifications: A qualified landscape contractor with a minimum of three (3) years experience with successful lawn establishment.

1. Installer's Field Supervision: Require Installer to maintain an experienced full-time supervisor on Project site when planting is in progress.

B. Soil-Testing Laboratory Qualifications: An independent laboratory, recognized by the State Department of Agriculture, with the experience and capability to conduct the testing indicated and that specializes in types of tests to be performed.

C. Topsoil Analysis: Furnish soil analysis by a qualified soil-testing laboratory stating percentages of organic matter; gradation of sand, silt, and clay content; cation exchange capacity; sodium absorption ratio; deleterious material; pH; and mineral and plant-nutrient content of topsoil.

1. Report suitability of topsoil for lawn growth. State recommended quantities of nitrogen, phosphorus, and potash nutrients and soil amendments to be added to produce a satisfactory topsoil.

D. Preinstallation Conference: Conduct conference at Project site to comply with requirements in Division 1 Section "Project Management and Coordination."

E. Contractor shall schedule an inspection by the Landscape Architect of areas following finish grading and prior to seeding. Notifications shall be given two (2) days in advance of seeding operations.

F. Another inspection by the Landscape Architect shall be required following notification by the Contractor that seeding and mulching operations are complete.

1.6 DELIVERY, STORAGE, AND HANDLING

A. Seed: Deliver seed in original sealed, labeled, and undamaged containers.

B. Sod: Harvest, deliver, store, and handle sod according to requirements in TPI's "Specifications for Turfgrass Sod Materials" and "Specifications for Turfgrass Sod Transplanting and Installation" in its "Guideline Specifications to Turfgrass Sodding."

1.7 SCHEDULING

A. Planting Restrictions: Sod during the following period. Coordinate planting periods with maintenance periods to provide required maintenance from date of Substantial Completion.

1. Fall Planting: October 1 – November 15
2. Spring Planting: March 1 – May 15

B. Weather Limitations: Proceed with planting only when existing and forecasted weather conditions permit.

1.8 LAWN MAINTENANCE

A. Begin maintenance immediately after each area is planted and continue until acceptable lawn is established, but for not less than the following periods:

1. Seeded Lawns: 60 days from date of Substantial Completion.

a. When full maintenance period has not elapsed before end of planting season, or if lawn is not fully established, continue maintenance during next planting season.

2. Sodded Lawns: 30 days from date of Substantial Completion.

B. Maintain and establish lawn by watering, fertilizing, weeding, mowing, trimming, replanting, and other operations. Roll, regrade, and replant bare or eroded areas and remulch to produce a uniformly smooth lawn.

1. In areas where mulch has been disturbed by wind or maintenance operations, add new mulch. Anchor as required to prevent displacement.

C. Watering: Provide and maintain temporary piping, hoses, and lawn-watering equipment to convey water from sources and to keep lawn uniformly moist to a depth of 4 inches for a minimum of three (3) weeks after seeding/sodding or throughout the maintenance period, whichever is greater.

1. Water daily with a fine spray and schedule watering based on weather conditions to prevent drying, wilting, puddling, erosion, and displacement of seed or mulch. Lay out temporary watering system to avoid walking over muddy or newly planted areas.
2. A typical Kentucky summer evapotranspiration rate for lawn of 0.16 inches/day means that 1.12 inches of precipitation per week, whether it be irrigation or rainfall, is needed to maintain lawn growth. Complete reliance on rainfall, even for large sites, is unacceptable, if less than one inch of rain occurs per week. Water established lawns at a minimum rate of 1.12 inches per week, including rainfall. Severely hot and dry weather will require more than the minimum rate of watering in order to maintain the moisture depth to 4 inches.
3. Contractor shall provide the water. Temporary meter(s) shall be used to purchase water from the utility company or it shall be hauled to the site at Contractor's expense.

C. Mow lawn as soon as top growth is tall enough to cut. Repeat mowing to maintain specified height without cutting more than 40 percent of grass height. Remove no more than 40 percent of grass-leaf growth in initial or subsequent mowings. Do not delay mowing until grass blades bend over and become matted. Do not mow when grass is wet. Schedule initial and subsequent mowings to maintain the following grass height:
1. Mow grass 2.5 to 3 inches high.

D. Lawn Postfertilization: Apply fertilizer after initial mowing and when grass is dry.

1. Use fertilizer that will provide actual nitrogen of at least 1 lb/1000 sq. ft. (0.45 kg/92.9 sq. m) to lawn area.

PART 2 - PRODUCTS

2.1 SEED

A. Grass Seed: Fresh, clean, dry, new-crop seed complying with AOSA's "Journal of Seed Technology; Rules for Testing Seeds" for purity and germination tolerances.

B. Seed Species: State-certified seed of grass species, as follows:

C. Seed Species: Seed of grass species as follows, with not less than 95 percent germination, not less than 85 percent pure seed, and not more than 0.5 percent weed seed:

1. Proportioned by weight as follows:

a. 100 percent annual rye.

2.2 TURFGRASS SOD

A. Turfgrass Sod: Certified, complying with TPI's "Specifications for Turfgrass Sod Materials" in its "Guideline Specifications to Turfgrass Sodding." Furnish viable sod of uniform density, color, and texture, strongly rooted, and capable of vigorous growth and development when planted.

B. Turfgrass Species: Sod of grass species as follows, with not less than 95 percent germination, not less than 85 percent pure seed, and not more than 0.5 percent weed seed:
1. 90% turf type tall fescue (Festuca arundinacea) and 10% bluegrass.

2.3 TOPSOIL

A. Topsoil: ASTM D 5268, pH range of 5.5 to 7, a minimum of one percent organic material content; free of stones 1 inch (25 mm) or larger in any dimension and other extraneous materials harmful to plant growth. Provide 6” minimum depth in lawn areas.

1. Topsoil Source: Reuse surface soil stockpiled on-site. Verify suitability of stockpiled surface soil to produce topsoil. Clean surface soil of roots, plants, sod, stones, clay lumps, and other extraneous materials harmful to plant growth.

a. Supplement with imported or manufactured topsoil from off-site sources when quantities are insufficient. Obtain topsoil displaced from naturally well-drained construction or mining sites where topsoil occurs at least 4 inches (100 mm) deep; do not obtain from bogs or marshes.

2.4 INORGANIC SOIL AMENDMENTS

A. Lime: ASTM C 602, agricultural limestone containing a minimum 80 percent calcium carbonate equivalent and as follows:

1. Class: Class T, with a minimum 99 percent passing through No. 8 (2.36-mm) sieve and a minimum 75 percent passing through No. 60 (0.25-mm) sieve.
2. Provide lime in form of dolomitic limestone.

B. Sulfur: Granular, biodegradable, containing a minimum of 90 percent sulfur, with a minimum 99 percent passing through No. 6 (3.35-mm) sieve and a maximum 10 percent passing through No. 40 (0.425-mm) sieve.

C. Iron Sulfate: Granulated ferrous sulfate containing a minimum of 20 percent iron and 10 percent sulfur.

D. Aluminum Sulfate: Commercial grade, unadulterated.

E. Perlite: Horticultural perlite, soil amendment grade.

F. Agricultural Gypsum: Finely ground, containing a minimum of 90 percent calcium sulfate.

G. Sand: Clean, washed, natural or manufactured, free of toxic materials.

H. Diatomaceous Earth: Calcined, diatomaceous earth, 90 percent silica, with approximately 140 percent water absorption capacity by weight.

I. Zeolites: Mineral clinoptilolite with at least 60 percent water absorption by weight.

2.5 ORGANIC SOIL AMENDMENTS

A. Compost: Well-composted, stable, and weed-free organic matter, pH range of 5.5 to 8; moisture content 35 to 55 percent by weight; 100 percent passing through 1-inch (25-mm) sieve; soluble salt content of 5 to 10 decisiemens/m; not exceeding 0.5 percent inert contaminants and free of substances toxic to plantings; and as follows:

1. Organic Matter Content: 50 to 60 percent of dry weight.
2. Feedstock: Agricultural, food, or industrial residuals; biosolids; yard trimmings; or source-separated or compostable mixed solid waste.

B. Peat: Finely divided or granular texture, with a pH range of 6 to 7.5, containing partially decomposed moss peat, native peat, or reed-sedge peat and having a water-absorbing capacity of 1100 to 2000 percent.

C. Manure: Well-rotted, unleached, stable or cattle manure containing not more than 25 percent by volume of straw, sawdust, or other bedding materials; free of toxic substances, stones, sticks, soil, weed seed, and material harmful to plant growth.

2.6 PLANTING ACCESSORIES

A. Selective Herbicides: EPA registered and approved, of type recommended by manufacturer for application.

2.7 FERTILIZER

A. Commercial Fertilizer: Commercial-grade complete fertilizer of neutral character, consisting of fast- and slow-release nitrogen, 50 percent derived from natural organic sources of urea formaldehyde, phosphorous, and potassium in the following composition:
   1. Composition: Nitrogen, phosphorous, and potassium in amounts recommended in soil reports from a qualified soil-testing agency.

B. Slow-Release Fertilizer: Granular or pelleted fertilizer consisting of 50 percent water-insoluble nitrogen, phosphorus, and potassium in the following composition:
   1. Composition: Nitrogen, phosphorous, and potassium in amounts recommended in soil reports from a qualified soil-testing agency.

2.8 MULCHES

A. Fiber Mulch: Biodegradable, dyed-wood, cellulose-fiber mulch; nontoxic; free of plant-growth or germination inhibitors; with maximum moisture content of 15 percent and a pH range of 4.5 to 6.5.

B. Nonasphaltic Tackifier: Colloidal tackifier recommended by fiber-mulch manufacturer for slurry application; nontoxic and free of plant-growth or germination inhibitors.

2.9 EROSION-CONTROL MATERIALS

A. Erosion-Control Blankets: Biodegradable wood excelsior, straw, or coconut-fiber mat enclosed in an accelerated photodegradable polypropylene mesh. Include manufacturer's recommended steel wire staples, 6 inches (150 mm) long. The basis of design shall be DS75 by North American Green (www.nagreen.com).

PART 3 - EXECUTION

3.1 EXAMINATION

A. Examine areas to receive lawns and grass for compliance with requirements and other conditions affecting performance. Proceed with installation only after unsatisfactory conditions have been corrected.

3.2 PREPARATION

A. Protect structures, utilities, sidewalks, pavements, and other facilities, trees, shrubs, and plantings from damage caused by planting operations.

   1. Protect adjacent and adjoining areas from hydroseeding overspray.

B. Provide erosion-control measures to prevent erosion or displacement of soils and discharge of soil-bearing water runoff or airborne dust to adjacent properties and walkways.

3.3 LAWN PREPARATION

A. Limit lawn subgrade preparation to areas to be planted.

B. Newly Graded Subgrades: Loosen subgrade to a minimum depth of 4 inches (100 mm). Remove stones larger than 1 inch (25 mm) in any dimension and large quantities of smaller rock, including remnants of gravel stockpiles or excess pavement DGA, as well as sticks, roots, rubbish, and other extraneous matter and legally dispose of them off Owner's property.

1. Apply fertilizer directly to subgrade before loosening.
2. Spread topsoil, apply fertilizer on surface, and thoroughly blend planting soil mix.

a. Delay mixing fertilizer with planting soil if planting will not proceed within a few days.
b. Mix lime with dry soil before mixing fertilizer.

3. Spread planting soil mix to a depth of 6 inches minimum but not less than required to meet finish grades after light rolling and natural settlement. Do not spread if planting soil or subgrade is frozen, muddy, or excessively wet.

a. Spread approximately one-half the thickness of planting soil mix over loosened subgrade. Mix thoroughly into top 2 inches (50 mm) of subgrade. Spread remainder of planting soil mix.
b. Reduce elevation of planting soil to allow for soil thickness of sod.

C. Unchanged Subgrades: If lawns are to be planted in areas unaltered or undisturbed by excavating, grading, or surface soil stripping operations, prepare surface soil as follows:

1. Remove existing grass, vegetation, and turf. Do not mix into surface soil.
2. Loosen surface soil to a depth of at least of 6 inches (150 mm). Apply soil amendments and fertilizers according to planting soil mix proportions and mix thoroughly into top 4 inches (100 mm) of soil. Till soil to a homogeneous mixture of fine texture.

a. Apply fertilizer directly to surface soil before loosening.

3. Remove stones larger than 1 inch (25 mm) in any dimension and sticks, roots, trash, and other extraneous matter. Also remove large quantities of smaller rock, specifically remnants of gravel stockpiles.
4. Legally dispose of waste material, including grass, vegetation, and turf, off Owner's property.

D. Finish Grading: Grade planting areas to a smooth, uniform surface plane with loose, uniformly fine texture. No clods greater than ½” in diameter shall remain. Finish grading shall be performed with appropriate equipment such as box grader, not with a bobcat or backhoe. Grade to within plus or minus 1/2 inch (13 mm) of finish elevation. Roll and rake, remove ridges, and fill depressions to meet finish grades. Limit fine grading to areas that can be planted in the immediate future.

E. Moisten prepared lawn areas before planting if soil is dry. Water thoroughly and allow surface to dry before planting. Do not create muddy soil.

F. Restore areas if eroded or otherwise disturbed after finish grading and before planting.

3.4 HYDROSEEDING

A. Hydroseeding: Mix specified seed, fertilizer, and fiber mulch in water, using equipment specifically designed for hydroseed application. Continue mixing until uniformly blended into homogeneous slurry suitable for hydraulic application.

1. Mix slurry with nonasphaltic tackifier.
2. Apply slurry uniformly to all areas to be seeded in a one-step process. Apply mulch at a minimum rate of 2000-lb/acre dry weight but not less than the rate required to obtain specified seed-sowing rate.

3.5 EROSION CONTROL

A. Install erosion control blankets on slopes for temporary stabilization when sod cannot be installed due to climatic conditions. Install per manufacturer's recommendations using staples to secure on slopes.

3.6 SODDING

A. Lay sod within 24 hours of harvesting. Do not lay sod if dormant or if ground is frozen or muddy.

B. Lay sod to form a solid mass with tightly fitted joints. Butt ends and sides of sod; do not stretch or overlap. Stagger sod strips or pads to offset joints in adjacent courses. Avoid damage to subgrade or sod during installation. Tamp and roll lightly to ensure contact with subgrade, eliminate air pockets, and form a smooth surface. Work sifted soil or fine sand into minor cracks between pieces of sod; remove excess to avoid smothering sod and adjacent grass.

1. Lay sod across angle of slopes exceeding 1:3.
2. Anchor sod on slopes exceeding 1:6 with wood pegs or steel staples spaced as recommended by sod manufacturer but not less than 2 anchors per sod strip to prevent slippage.

C. Saturate sod with fine water spray within two hours of planting. During first week, water daily or more frequently as necessary to maintain moist soil to a minimum depth of 1-1/2 inches (38 mm) below sod.

3.7 SATISFACTORY LAWNS

A. Satisfactory Seeded Lawn: At end of maintenance period, a healthy, uniform, close stand of grass has been established, free of weeds and surface irregularities, with coverage exceeding 90 percent over any 10 sq. ft. (0.92 sq. m) and bare spots not exceeding 5 by 5 inches (125 by 125 mm).

B. Satisfactory Sodded Lawn: At end of maintenance period, a healthy, well-rooted, even-colored, viable lawn has been established, free of weeds, open joints, bare areas, and surface irregularities.

C. Reestablish lawns that do not comply with requirements and continue maintenance until lawns are satisfactory.

3.8 CLEANUP AND PROTECTION

A. Promptly remove soil and debris created by lawn work from paved areas. Clean wheels of vehicles before leaving site to avoid tracking soil onto roads, walks, or other paved areas.

B. Erect barricades and warning signs as required to protect newly planted areas from traffic. Maintain barricades throughout maintenance period and remove after lawn is established.

C. Remove erosion-control measures after grass establishment period.

END OF SECTION 329200

SECTION 329300 - PLANTS

PART 1 GENERAL

1.01 DESCRIPTION

A. Provide trees, shrubs ornamental grasses, ground covers and perennials as shown and specified. The work includes:

1. Soil preparation.

2. Trees, shrubs, ornamental grasses, ground covers and perennials.

3. Planting mixes.

4. Mulch and planting accessories.

5. Maintenance.

B. Related Work:

1. Section 312000: Earth Moving.

2. Section 329200: Turf and Grasses

1.02 QUALITY ASSURANCE

A. Plant names indicated, comply with "Standardized Plant Names" as adopted by the latest edition of the American Joint Committee of Horticultural Nomenclature. Names of varieties not listed conform generally with names accepted by the nursery trade. Provide stock true to botanical name and legibly tagged.

B. Comply with sizing and grading standards of the latest edition of "American Standard for Nursery Stock". A plant shall be dimensioned as it stands in its natural position.

C. All plants shall be nursery grown under climatic conditions similar to those in the locality of the project for a minimum of 2 years.

D. Stock furnished shall be at least the minimum size indicated. Larger stock is acceptable, at no additional cost, and providing that the larger plants will not be cut back to size indicated. Provide plants indicated by two measurements so that only a maximum of 25% are of the minimum size indicated and 75% are of the maximum size indicated.

E. Provide "specimen" plants with a special height, shape, or character of growth. Tag specimen trees or shrubs at the source of supply. The Landscape Architect will inspect specimen selections at the source of supply for suitability and adaptability to selected location. When specimen plants cannot be purchased locally, provide sufficient photographs of the proposed specimen plants for approval.

F. Plants may be inspected and approved at the place of growth, for compliance with specification requirements for quality, size, and variety.

1. Such approval shall not impair the right of inspection and rejection upon delivery at the site or during the progress of the work.

G. Provide and pay for material testing. Testing agency shall be acceptable to the Landscape Architect. Provide the following data:

1. Test representative material samples proposed for use.

2. Topsoil:

a. pH factor.

b. Mechanical analysis.

c. Percentage of organic content.

d. Recommendations on type and quantity of additives required to establish satisfactory pH factor and supply of nutrients to bring nutrients to satisfactory level for planting.

3. Peat Moss:

a. Loss of weight by ignition.

b. Moisture absorption capacity.

H. Installer qualifications: A firm qualified as a landscape installer with a minimum of five (5) years experience of work of this type whose work has resulted in successful establishment of exterior plants.

1. The Installer shall have a member of the firm that holds the following credentials: Hold a minimum of a four (4) year bachelor degree in the field of landscape constructing, landscape management, agronomy, landscape architecture or horticulture or be a Certified Landscape Professional by the Professional Landcare Network (PLANET).
2. Be available to respond to inquiries from the Landscape Architect.

I. The Installer's project superintendent shall have the following credentials and be available to the project as follows:

1. Hold a minimum of two (2) year degree in the field of landscape contracting, landscape management, agronomy, or be a Certified Landscape Technician – Exterior by the Professional Landcare Network (PLANET).

2. Be present on the project site a minimum of 75% of the time the Installer's crew is present on site.

J. Preinstallation Conference: Conduct conference at the Project Site with Contractor, Owner, Architect and Landscape Architect in attendance to be scheduled by the Construction Manager.

1.03 SUBMITTALS

A. Submit the following material samples:

1. Mulch.

2. Planting accessories.

B. Submit the following materials certification:

1. Topsoil source and pH value.

2. Peat moss.

3. Plant fertilizer.

4. Superphosphate.

3. Dolomite.

4. Perlite.

5. Vermiculite.

6. Bonemeal.

C. Submit material test reports.

D. Upon plant material acceptance, submit written maintenance instructions recommending procedures for maintenance of plant materials.

E. Provide plant material record drawings:

1. Legibly mark drawings to record actual construction.

2. Indicate horizontal and vertical locations, referenced to permanent surface improvements.

3. Identify field changes of dimension and detail and changes made by Change Order.

1.04 DELIVERY, STORAGE, AND HANDLING

A. Deliver fertilizer materials in original, unopened, and undamaged containers showing weight, analysis, and name of manufacturer. Store in manner to prevent wetting and deterioration.

B. Take all precautions customary in good trade practice in preparing plants for moving. Workmanship that fails to meet the highest standards will be rejected. Spray deciduous plants in foliage with an approved "Anti-Desiccant" immediately after digging to prevent dehydration. Dig, pack, transport, and handle plants with care to ensure protection against injury. Inspection certificates required by law shall accompany each shipment invoice or order to stock and on arrival, the certificate shall be filed with the Landscape Architect. Protect all plants from drying out. If plants cannot be planted immediately upon delivery, properly protect them with soil, wet peat moss, or in a manner acceptable to the Landscape Architect. Water heeled-in plantings daily. No plant shall be bound with rope or wire in a manner that could damage or break the branches.

C. Cover plants transported on open vehicles with a protective covering to prevent wind burn.

D. Provide dry, loose topsoil for planting bed mixes. Frozen or muddy topsoil is not acceptable.

1.05 PROJECT CONDITIONS

A. Work notification: Notify Landscape Architect at least 7 working days prior to installation of plant material.

B. Protect existing utilities, paving, and other facilities from damage caused by landscaping operations.

C. A complete list of plants, including a schedule of sizes, quantities, and other requirements is shown on the drawings. In the event that quantity discrepancies or material omissions occur in the plant materials list, the planting plans shall govern.

1.06 WARRANTY

A. Warrant plant material to remain alive and be in healthy, vigorous condition for a period of 1 year after completion and acceptance of entire project.

1. Inspection of plants will be made by the Landscape Architect at completion of planting.

B. Replace, in accordance with the drawings and specifications, all plants that are dead or, as determined by the Landscape Architect, are in an unhealthy or unsightly condition, and have lost their natural shape due to dead branches, or other causes due to the Contractor's negligence. The cost of such replacement(s) is at Contractor's expense. Warrant all replacement plants for 1 year after installation.

C. Warranty shall not include damage or loss of trees, plants, or ground covers caused by fires, floods, freezing rains, lightning storms, or winds over 75 miles per hour, winter kill caused by extreme cold and severe winter conditions not typical of planting area; acts of vandalism or negligence on the part of the Owner.

D. Remove and immediately replace all plants, as determined by the Landscape Architect, to be unsatisfactory during the initial planting installation.

PART 2 PRODUCTS

2.01 MATERIALS

A. Plants: Provide plants typical of their species or variety; with normal, densely developed branches and vigorous, fibrous root systems. Provide only sound, healthy, vigorous plants free from defects, disfiguring knots, sun scald injuries, frost cracks, abrasions of the bark, plant diseases, insect eggs, borers, and all forms of infestation. All plants shall have a fully developed form without voids and open spaces. Plants held in storage will be rejected if they show signs of growth during storage.

1. Dig balled and burlapped plants with firm, natural balls of earth of sufficient diameter and depth to encompass the fibrous and feeding root system necessary for full recovery of the plant. Provide ball sizes complying with the latest edition of the "American Standard for Nursery Stock". Cracked or mushroomed balls are not acceptable.

2. Container-grown stock: Grown in a container for sufficient length of time for the root system to have developed to hold its soil together, firm and whole.

a. No plants shall be loose in the container.

b. Container stock shall not be pot bound.

3. Provide tree species that mature at heights over 25 feet with a single main trunk. Trees that have the main trunk forming a "Y" shape are not acceptable.

4. Plants planted in rows shall be matched in form.

5. Plants larger than those specified in the plant list may be used when acceptable to the Landscape Architect.

   a. If the use of larger plants is acceptable, increase the spread of roots or root ball in proportion to the size of the plant.

6. The height of the trees, measured from the crown of the roots to the top of the top branch, shall not be less than the minimum size designated in the plant list.

7. No pruning wounds shall be present with a diameter of more than 1" and such wounds must show vigorous bark on all edges.

8. Evergreen trees shall be branched to the ground.

9. Shrubs and small plants shall meet the requirements for spread and height indicated in the plant list.

   a. The measurements for height shall be taken from the ground level to the height of the top of the plant and not the longest branch.

   b. Single stemmed or thin plants will not be accepted.

   c. Side branches shall be generous, well twigged, and the plant as a whole well-bushed to the ground.

   d. Plants shall be in a moist, vigorous condition, free from dead wood, bruises, or other root or branch injuries.

2.02 ACCESSORIES

A. Standard Topsoil for Planting Beds: Fertile, friable, natural topsoil of loamy character, without admixture of subsoil material, obtained from a well-drained arable site, reasonably free from clay, lumps, coarse sands, stones, plants, roots, sticks, and other foreign materials, with acidity range of between pH 6.0 and 6.8 and a minimum organic matter content of 5%.

1. Topsoil that has been stripped and stockpiled on site shall be the primary topsoil to be utilized on this project. Provide additional topsoil from off-site if necessary. Based on soil borings preformed by Geotechnical Engineer, on-site topsoil will need to be supplemented with off-site sources in order to obtain the required topsoil depth.

2. Provide topsoil free of substances harmful to the plants that will be grown in the soil.

B. Peat Moss: Brown to black in color, weed and seed free granulated raw peat or baled peat, containing not more than 9% mineral on a dry basis.

1. Provide ASTM D2607 sphagnum peat moss with a pH below 6.0 for ericaceous plants.

C. Standard Plant Fertilizer: Commercial type approved by the Landscape Architect, containing 5% nitrogen, 10% phosphoric acid, and 5% potash by weight. 1/4 of nitrogen in the form of nitrates, 1/4 in form of ammonia salt, and 1/2 in form of organic nitrogen.

D. Anti-Desiccant: Protective film emulsion providing a protective film over plant surfaces; permeable to permit transpiration. Mixed and applied in accordance with manufacturer's instructions.

E. Mulch:

1. Organic: 6 month old well rotted shredded native hardwood bark mulch not larger than 4" in length and 1/2" in width, free of wood chips and sawdust.

2. Non-organic (Interior planters): Kenlite fired shale mulch.

F. Water: Free of substances harmful to plant growth. Hoses or other methods of transportation furnished by Contractor.

G. Stakes for Staking: Hardwood, 2" x 2" x 8'-0" long.

H. Stakes for Guying: Hardwood, 2" x 2" x 36" long.

I. Guying/Staking/Wire/Strap: Flat woven polypropylene material, ¾ " wide, 900 lb. Break strength lock stitch with rounded weave.

J. Tree Wrap: Standard waterproofed tree wrapping paper, 2-1/2" wide, made of 2 layers of crepe craft paper weighing not less than 30 lbs. per ream, cemented together with asphalt.

K. Twine: Two-ply jute material.

PART 3 EXECUTION

3.01 INSPECTION

A. Examine proposed planting areas and conditions of installation. Do not start planting work until unsatisfactory conditions are corrected.

3.02 PREPARATION

A. Time of planting:

1. Evergreen material: Plant evergreen materials between September 1 and November 1 or in spring before new growth begins. If project requirements require planting at other times, plants shall be sprayed with anti-desiccant prior to planting operations.

2. Deciduous material: Plant deciduous materials in a dormant condition. If deciduous trees are planted in-leaf, they shall be sprayed with an anti-desiccant prior to planting operation.

3. Planting times other than those indicated shall be acceptable to the Landscape Architect.

B. Planting shall be performed only by experienced workmen familiar with planting procedures under the supervision of a qualified supervisor.

C. Locate plants as indicated or as approved in the field after staking by the Contractor. If obstructions are encountered that are not shown on the drawings, do not proceed with planting operations until alternate plant locations have been selected.

D. Excavate circular plant pits with sloped sides, except for plants specifically indicated to be planted in beds. Provide pits at least twice the diameter of the root system for trees and shrubs. Depth of pit shall accommodate the root system. Provide undisturbed subgrade to hold root ball at nursery grade as shown on the drawings. Remove excavated materials from the site.

E. Provide pre-mixed planting mixture for use around the balls and roots of the plants consisting of planting topsoil and 1/2 lb. plant fertilizer Type "A" for each cu. yd. of mixture.

F. Provide pre-mixed ground cover bed planting mixture consisting of 3 parts planting topsoil to 1 part peat moss and 1/2 lb. plant fertilizer Type "A" per cu. yd. Provide beds a minimum of 8" deep. If slopes are greater than 4 to 1 increase depth to 12".

G. Provide pre-mixed planting mixture for use around the balls and roots of ericaceous plants consisting of 1 part planting topsoil to 1 part sphagnum peat moss and 1/2 lb. plant fertilizer Type "B" per cu. yd. of mixture.

3.03 INSTALLATION

A. Set plant material in the planting pit to proper grade and alignment. Set plants upright, plumb, and faced to give the best appearance or relationship to each other or adjacent structure. Set plant material so that the point at which the trunk flares out to meet the root matches finish grade. If the rootball or container contains excess soil covering a portion of the trunk, this soil shall be removed prior to setting the plant in the planting pit. No filling will be permitted around trunks or stems. Backfill the pit with planting mixture. Do not use frozen or muddy mixtures for backfilling. Form a ring of soil around the edge of each planting pit to retain water.

B. After balled and burlapped plants are set, muddle planting soil mixture around bases of balls and fill all voids.

1. Remove all burlap, ropes, and wires from the tops of balls.

C. Space ground cover plants in accordance with indicated dimensions. Adjust spacing as necessary to evenly fill planting bed with indicated quantity of plants. Plant to within 12" of the trunks of trees and shrubs within planting bed and to within 6" of edge of bed.

D. Mulching:

1. Mulch tree and shrub planting pits and shrub beds with required mulching material 3" deep immediately after planting. Thoroughly water mulched areas. After watering, rake mulch to provide a uniform finished surface.

2. Mulch ground cover beds with mulch 1" to 1-1/2" deep immediately after planting.

E. Wrapping, guying, staking:

1. Inspect trees for injury to trunks, evidence of insect infestation, and improper pruning before wrapping.

2. Wrap trunks of all trees, subject to winter sunburn, spirally from bottom to top with specified tree wrap and secure in place.

   a. Overlap 1/2 the width of the tree wrap strip and cover the trunk from the ground to the height of the second branch.

   b. Secure tree wrap in place with twine wound spirally downward in opposite direction, tied around the tree in at least 3 places in addition to the top and bottom.

3. Staking/Guying:

   a. Stake/guy all trees immediately after lawn seeding or sodding operations and prior to acceptance. When high winds or other conditions, which may effect tree survival or appearance, occur, the Landscape Architect may require immediate staking/guying.

   b. Stake deciduous trees under 3" caliper. Stake evergreen trees under 8'-0" tall.

   c. Guy deciduous trees over 3" caliper. Guy evergreen trees over 8'-0" tall.

4. All work shall be acceptable to the Landscape Architect.

F. Pruning:

1. Remove or cut back broken, damaged, and unsymmetrical growth of new wood.

2. Multiple leader plants: Preserve the leader, which will best promote the symmetry of the plant. Cut branches flush with the trunk or main branch, at a point beyond a lateral shoot or bud a distance of not less than 1/2 the diameter of the supporting branch. Make cut on an angle.

3. Prune evergreens only to remove broken or damaged branches.

3.04 MAINTENANCE

A. Maintain plantings until completion and acceptance of the entire project.

B. Maintenance shall include pruning, cultivating, weeding, watering, and application of appropriate insecticides and fungicides necessary to maintain plants free of insects and disease.

1. Re-set settled plants to proper grade and position. Restore planting saucer and adjacent material and remove dead material.

2. Tighten and repair guy wires and stakes as required.

3. Correct defective work as soon as possible after deficiencies become apparent and weather and season permit.

4. Water trees, plants, and ground cover beds within the first 24 hours of initial planting, and not less than twice per week until final acceptance.

3.05 ACCEPTANCE

A. Inspection to determine acceptance of planted areas will be made by the Landscape Architect, upon Contractor's request. Provide notification at least 10 working days before requested inspection date.

1. Planted areas will be accepted provided all requirements, including maintenance, have been complied with and plant materials are alive and in a healthy, vigorous condition.

B. Upon acceptance, the Owner will assume plant maintenance for all landscape.

3.06 CLEANING

A. Perform cleaning during installation of the work and upon completion of the work. Remove from site all excess materials, soils, debris, and equipment. Repair damage resulting from planting operations.

END OF SECTION 329300

SECTION 334100 - STORM UTILITY DRAINAGE PIPING

PART 1 - GENERAL

1.1 RELATED DOCUMENTS

A. Drawings and general provisions of the Contract, including General and Supplementary Conditions and Division 1 Specification Sections, apply to this Section.

1.2 SUMMARY

A. This Section includes gravity-flow, nonpressure storm drainage outside the building, with the following components:

1. Storm piping, fittings & couplings.
2. Cleanouts.
3. Precast concrete drainage structures.
4. Water Quality Unit.
5. PVC and HDPE yard drain structures.

1.3 DEFINITIONS

A. PVC: Polyvinyl chloride plastic.

B. HDPE: High Density Polyethylene pipe.

C. RCP: Reinforced Concrete Pipe

1.4 PERFORMANCE REQUIREMENTS

A. Gravity-Flow, Nonpressure, Drainage-Piping Pressure Rating: Pipe joints shall be at least silttight, unless otherwise indicated.

1.5 SUBMITTALS

A. Shop Drawings: For the following:
1. Stormwater Inlets: Include plans, elevations, sections, details, and frames, covers, and grates.
2. Cleanouts: Include details.
3. Drain grates: details.
4. Water Quality Unit: details.
5. Storm pipe: data.
6. Stormwater Detention Structures: Include plans, elevations, sections, details, frames, covers, design calculations, and concrete design-mix reports.

1.6 DELIVERY, STORAGE, AND HANDLING

A. Do not store plastic structures, pipe, and fittings in direct sunlight.

B. Protect pipe, pipe fittings, and seals from dirt and damage.

C. Handle precast stormwater inlets according to manufacturer's written rigging instructions.

PART 2 - PRODUCTS

2.1 MANUFACTURERS

A. In other Part 2 articles where titles below introduce lists, the following requirements apply to product selection:

1. Available Manufacturers: Subject to compliance with requirements, manufacturers offering products that may be incorporated into the Work include, but are not limited to, manufacturers specified.

2.2 PIPING MATERIALS

A. Refer to Part 3 "Piping Applications" Article for applications of pipe, fitting, and joining materials.

2.3 PVC PIPE AND FITTINGS

A. PVC Cellular-Core Piping:

1. PVC Cellular-Core Pipe and Fittings: ASTM F 891, Sewer and Drain Series, PS 50 minimum stiffness, PVC cellular-core pipe with plain ends for solvent-cemented joints.
2. Fittings: ASTM D 3034, SDR 35, PVC socket-type fittings.

2.4 NONPRESSURE TRANSITION COUPLINGS

A. Comply with ASTM C 1173, elastomeric, sleeve-type, reducing or transition coupling, for joining underground nonpressure piping. Include ends of same sizes as piping to be joined, and corrosion-resistant-metal tension band and tightening mechanism on each end.

B. Sleeve Materials:
1. For Plastic Pipes: ASTM F 477, elastomeric seal or ASTM D 5926, PVC.
2. For Dissimilar Pipes: ASTM D 5926, PVC or other material compatible with pipe materials being joined.

2.5 CONCRETE

A. General: Cast-in-place concrete according to ACI 318/318R, ACI 350R, and the following:

1. Cement: ASTM C 150, Type II.
2. Fine Aggregate: ASTM C 33, sand.
3. Coarse Aggregate: ASTM C 33, crushed gravel.

4. Water: Potable.

B. Portland Cement Design Mix: 4000 psi minimum, with 0.45 maximum water-cementitious materials ratio.

1. Reinforcement Fabric: ASTM A 185, steel, welded wire fabric, plain.
2. Reinforcement Bars: ASTM A 615/A 615M, Grade 60, deformed steel.

C. Ballast and Pipe Supports: Portland cement design mix, 3000 psi minimum, with 0.58 maximum water-cementitious materials ratio.

1. Reinforcement Fabric: ASTM A 185, steel, welded wire fabric, plain.
2. Reinforcement Bars: ASTM A 615/A 615M, Grade 60, deformed steel.

2.6 CURB BOXES, SURFACE INLETS & MANHOLES

A. Standard Precast Concrete Drainage Structures:

1. Description: ASTM C 478, precast, reinforced concrete, of depth indicated, with provision for sealant joints.
2. Base Section: 6-inch minimum thickness for floor slab and 4-inch minimum thickness for walls and base riser section, and separate base slab or base section with integral floor.
3. Riser Sections: 4-inch minimum thickness, 48-inch diameter, and lengths to provide depth indicated.
4. Top Section: Eccentric-cone type unless concentric-cone or flat-slab-top type is indicated. Top of cone of size that matches grade rings.
5. Joint Sealant: ASTM C 990, bitumen or butyl rubber.
6. Adjusting Rings: Interlocking rings with level or sloped edge in thickness and shape matching catch basin frame and grate. Include sealant recommended by ring manufacturer.
7. Grade Rings: Include two or three reinforced-concrete rings, of 6- to 9-inch total thickness, that match 24-inch-diameter frame and grate.

2.7 YARD DRAINS

1. Inline drains and drain basins: ASTM D1784, D2122, D2564, D2855, D3212, F477, F1336, and A-48-83, by Nyloplast Inc or approved equal.
2. Courtyard drains: 9” square and 12” square inlets with pre-formed pipe openings manufactured of structural-foam polyolefin with ductile iron grates, by NDS or approved equal.

2.8 TRENCH DRAINS

Pedestrian areas: Cast-in-place or pre-manufactured trench drain with 8” wide cast iron grates. Provide open grates with ADA compliant ¼” slot dimension grates where indicated on drawings. Slots shall be perpendicular with the direction of the surface runoff. Basis of Design: Ironsmith, model #9032-8.

A. Vehicular areas: Heavy Duty, H-20, cast-in-place trench drain with cast iron grates and steel frames. Provide cross drain slots dimension where indicated on drawings. Basis of Design: J.R. Hoe 12”, Standard, CD.

2.9 CLEANOUTS

A. Gray-Iron Cleanouts: ASME A112.36.2M, round, gray-iron housing with clamping device and round, secured, scoriated, gray-iron cover. Include gray-iron ferrule with inside calk or spigot connection and countersunk, tapered-thread, brass closure plug.

1. Manufacturers:

a. Josam Company.
b. MIFAB Manufacturing Inc.
c. Smith, Jay R. Mfg. Co.
d. Wade Div.; Tyler Pipe.
e. Watts Industries, Inc.
f. Watts Industries, Inc.; Enpoco, Inc. Div.
g. Zurn Industries, Inc.; Zurn Specification Drainage Operation.

2. Top-Loading Classification(s): Medium duty.

2.10 WATER QUALITY UNIT

A. Precast concrete unit capable of capturing pollutants greater than 110 microns from stormwater runoff.

1. Manufacturers:

a. 6’ dia. Barracuda unit with solid lid by ADS.

2. Other acceptable manufacturers:
a. CDS Unit by Contech
b. First Defense by HydroInternational.

PART 3 - EXECUTION

3.1 EARTHWORK

A. Excavation, trenching, and backfilling are specified in Section 312000 "Earth Moving".

3.2 PIPING INSTALLATION

A. General Locations and Arrangements: Drawing plans and details indicate general location and arrangement of underground storm drainage piping. Location and arrangement of piping layout take design considerations into account. Install piping as indicated, to extent practical. Where specific installation is not indicated, follow piping manufacturer's written instructions.

B. Install piping beginning at low point, true to grades and alignment indicated with unbroken continuity of invert. Place bell ends of piping facing upstream. Install gaskets, seals, sleeves, and couplings according to manufacturer's written instructions for use of lubricants, cements, and other installation requirements.

C. Install manholes for changes in direction unless fittings are indicated. Use fittings for branch connections unless direct tap into existing sewer is indicated.

D. Install proper size increasers, reducers, and couplings where different sizes or materials of pipes and fittings are connected. Reducing size of piping in direction of flow is prohibited.

E. Tunneling: Install pipe under streets or other obstructions that cannot be disturbed by tunneling, jacking, or a combination of both.

F. Install gravity-flow, nonpressure drainage piping according to the following:

1. Install piping pitched down in direction of flow, at minimum slope as indicated.
2. Install HDPE corrugated sewer piping according to CPPA's "Recommended Installation Practices for Corrugated Polyethylene Pipe and Fittings."
3. Install reinforced – concrete sewer piping according to ASTM C 1479 and ACPA's "Concrete Pipe Installation Manual".

3.3 PIPE JOINT CONSTRUCTION

A. Join gravity-flow, nonpressure drainage piping according to the following:

1. Join corrugated HDPE piping according to CPPA 100 and the following:

   a. Use silttight couplings for Type 1, silttight joints.

2. Join reinforced – concrete seer piping according to ACPA's "Concrete Pipe Installation Manual" for rubber-gasket joints.

3.4 INLETS, MANHOLES, TRENCH DRAINS & WATER QUALITY UNIT INSTALLATION

A. Construct inlets, manholes and trench drains to sizes and shapes indicated.

B. Set top of grates/lids to elevations indicated, flush with adjacent surfaces.

C. Install functioning apparatus of WQU within manhole per manufacturer's instructions.

3.5 CONCRETE PLACEMENT

A. Place cast-in-place concrete according to ACI 318/318R.

3.6 CONNECTIONS

A. Connect nonpressure, gravity-flow drainage piping in building's storm building drains specified in "Storm Drainage Piping."

3.7 FIELD QUALITY CONTROL

A. Inspect interior of piping to determine whether line displacement or other damage has occurred. Inspect after approximately 24 inches of backfill is in place, and again at completion of Project.

1. Submit separate reports for each system inspection.

3.8 CLEANING

A. Clean interior of structures and piping of dirt and superfluous materials. Flush with potable water.

END OF SECTION 334100

SECTION 334600 - SUBDRAINAGE

PART 1 - GENERAL

1.1 RELATED DOCUMENTS

A. Drawings and general provisions of the Contract, including General and Supplementary Conditions and Division 1 Specification Sections, apply to this Section.

1.2 SUMMARY

A. This Section includes subdrainage systems for the following:

1. Beneath stormwater detention basin.

2. Beneath pavers on concrete slabs.

1.3 DEFINITIONS

A. PE: Polyethylene plastic.

B. PVC: Polyvinyl chloride plastic.

C. Subdrainage: Drainage system that collects and removes subsurface or seepage water.

1.4 SUBMITTALS

A. Product Data: For the following:

1. Perforated-wall pipe and fittings.
2. Geotextile filter fabrics.

PART 2 - PRODUCTS

2.1 MANUFACTURERS

A. In other Part 2 articles where titles below introduce lists, the following requirements apply to product selection:

1. Available Manufacturers: Subject to compliance with requirements, manufacturers offering products that may be incorporated into the Work include, but are not limited to, manufacturers specified.

2.2 PIPING MATERIALS

A. Refer to the "Piping Applications" Article in Part 3 for applications of pipe, tube, fitting, and joining materials.

2.3 PERFORATED-WALL PIPES AND FITTINGS

A. Perforated PE Pipe and Fittings:

1. NPS 6 (DN 150) and Smaller: ASTM F 405 or AASHTO M 252, Type CP; corrugated, for coupled joints.
2. NPS 8 (DN 200) and Larger: ASTM F 667; AASHTO M 252, Type CP; or AASHTO M 294, Type CP; corrugated; for coupled joints.
3. Couplings: Manufacturer's standard, band type.

B. Perforated PVC Sewer Pipe and Fittings: ASTM D 2729, bell-and-spigot ends, for loose joints.

2.4 CLEANOUTS

A. Cast-Iron Cleanouts: ASME A112.36.2M; with round-flanged, cast-iron housing; and secured, scoriated, Medium-Duty Loading class, cast-iron cover. Include cast-iron ferrule and countersunk, brass cleanout plug.

2.5 DRAINAGE CONDUITS

A. Single-Pipe Drainage Conduits: Prefabricated geocomposite with perforated corrugated core molded from HDPE complying with ASTM D 3350 and wrapped in geotextile filter fabric.

1. Manufacturers:

   a. Advanced Drainage Systems.

   b. Hancor.

   c. Prinsco.

2. Filter Fabric: Nonwoven, PP geotextile.
3. Fittings: HDPE with combination NPS 4 and NPS 6 (DN 100 and DN 150) outlet connection.
4. Couplings: Corrugated HDPE band.

2.6 SOIL MATERIALS

A. Backfill, drainage course, impervious fill, and satisfactory soil materials are specified in "Earth Moving."

2.7 GEOTEXTILE FILTER FABRICS

A. Description: Fabric of PP or polyester fibers or combination of both, with flow rate range from 110 to 330-gpm/sq. ft. (4480 to 13 440 L/min. per sq. m) when tested according to ASTM D 4491.

1. Structure Type: Nonwoven, needle-punched continuous filament.
2. Style(s): Flat and sock.

PART 3 - EXECUTION

3.1 EXAMINATION

A. Examine surfaces and areas for suitable conditions where subdrainage systems are to be installed.

B. Proceed with installation only after unsatisfactory conditions have been corrected.

3.2 EARTHWORK

A. Excavating, trenching, and backfilling are specified in "Earth Moving."

3.3 PIPING APPLICATIONS

A. Underground Subdrainage Piping:

1. Perforated PE pipe and fittings, couplings, and coupled joints.
2. Perforated PVC sewer pipe and fittings for loose, bell-and-spigot joints.

3.4 CLEANOUT APPLICATIONS

A. In Underground Subdrainage Piping:

1. At Grade in Earth: Cast-iron cleanouts.
2. At Grade in Paved Areas: Cast-iron cleanouts.

3.5 FOUNDATION DRAINAGE INSTALLATION

A. Install foundation drains at back of all site retaining walls, including perforated pipe in sock and #57 stone backfill wrapped with filter fabric, with outlet pipe connected to adjacent storm sewer system.

B. Place impervious fill material on subgrade adjacent to bottom of footing after concrete footing forms have been removed. Place and compact impervious fill to dimensions indicated, but not less than 6 inches (150 mm) deep and 12 inches (300 mm) wide.

C. Lay flat-style geotextile filter fabric in trench and overlap trench sides.

D. Place supporting layer of drainage course over compacted subgrade and geotextile filter fabric, to compacted depth of not less than 4 inches (100 mm).

E. Encase pipe with sock-style geotextile filter fabric before installing pipe. Connect sock sections with tape.

F. Install drainage piping as indicated in Part 3 "Piping Installation" Article for foundation subdrainage.

G. Add drainage course to width of at least 6 inches (150 mm) on side away from wall and to top of pipe to perform tests.

H. After satisfactory testing, cover drainage piping to width of at least 6 inches (150 mm) on side away from footing and above top of pipe to within 12 inches (300 mm) of finish grade.

I. Install drainage course and wrap top of drainage course with flat-style geotextile filter fabric.

J. Place layer of flat-style geotextile filter fabric over top of drainage course, overlapping edges at least 4 inches (100 mm).

K. Place initial backfill material over compacted drainage course. Place material in loose-depth layers not exceeding 6 inches (150 mm). Thoroughly compact each layer. Final backfill to finish elevations and slope away from building.

3.6 PIPING INSTALLATION

A. Install piping beginning at low points of system, true to grades and alignment indicated, with unbroken continuity of invert. Bed piping with full bearing in filtering material. Install gaskets, seals, sleeves, and couplings according to manufacturer's written instructions and other requirements indicated.

1. Foundation Subdrainage: Install piping pitched down in direction of flow, at a minimum slope of 0.5 percent and with a minimum cover of 36 inches (915 mm), unless otherwise indicated.
2. Lay perforated pipe with perforations down.
3. Excavate recesses in trench bottom for bell ends of pipe. Lay pipe with bells facing upslope and with spigot end entered fully into adjacent bell.

B. Use increasers, reducers, and couplings made for different sizes or materials of pipes and fittings being connected. Reduction of pipe size in direction of flow is prohibited.

C. Install PE piping according to ASTM D 2321.

D. Install PVC piping according to ASTM D 2321.

3.7 PIPE JOINT CONSTRUCTION

A. Join PE pipe, tubing, and fittings with couplings for soil-tight joints according to AASHTO's "Standard Specifications for Highway Bridges," Division II, Section 26.4.2.4, "Joint Properties."

B. Join perforated, PE pipe and fittings with couplings for soil-tight joints according to AASHTO's "Standard Specifications for Highway Bridges," Division II, Section 26.4.2.4, "Joint Properties"; or according to ASTM D 2321.

C. Join PVC pipe and fittings according to ASTM D 3034 with elastomeric seal gaskets according to ASTM D 2321.

D. Join perforated PVC pipe and fittings according to ASTM D 2729, with loose bell-and-spigot joints.

3.8 CLEANOUT INSTALLATION

A. Cleanouts for Foundation Subdrainage:

1. Install cleanouts from piping to grade. Locate cleanouts at beginning of piping run and at changes in direction. Install fittings so cleanouts open in direction of flow in piping.
2. In vehicular-traffic areas, use NPS 4 (DN 100) cast-iron soil pipe and fittings for piping branch fittings and riser extensions to cleanout. Set cleanout frames and covers in a cast-in-place concrete anchor, 18 by 18 by 12 inches (450 by 450 by 300 mm) in depth. Set top of cleanout flush with grade. Cast-iron pipe may also be used for cleanouts in nonvehicular-traffic areas.
3. In nonvehicular-traffic areas, use NPS 4 (DN 100) cast-iron pipe and fittings for piping branch fittings and riser extensions to cleanout. Set cleanout frames and covers in a cast-in-place concrete anchor, 12 by 12 by 4 inches (300 by 300 by 100 mm) in depth. Set top of cleanout plug 1 inch (25 mm) above grade.

3.9 CONNECTIONS

A. Drawings indicate general arrangement of piping, fittings, and specialties.

B. Connect low elevations of subdrainage system to catch basin where practical.

3.10 FIELD QUALITY CONTROL

A. Testing: After installing drainage course to top of piping, test drain piping with water to ensure free flow before backfilling. Remove obstructions, replace damaged components, and repeat test until results are satisfactory.

3.11 CLEANING

A. Clear interior of installed piping and structures of dirt and other superfluous material as work progresses. Maintain swab or drag in piping and pull past each joint as it is completed. Place plugs in ends of uncompleted pipe at end of each day or when work stops.

END OF SECTION

UNIVERSITY OF KENTUCKY
SPECIAL CONDITIONS OF THE CONTRACT
FOR CONSTRUCTION BY A CONSTRUCTION MANAGER AT RISK

TABLE OF CONTENTS

ARTICLE 01 GENERAL INFORMATION 3
ARTICLE 03 (NOT USED) 3
ARTICLE 04 CONSULTANT 3
ARTICLE 05 GEOTECHNICAL REPORT 3
ARTICLE 06 TIME FOR COMPLETION 3
ARTICLE 07 LIQUIDATED DAMAGES 3
ARTICLE 08 SUBMITTALS AND SHOP DRAWINGS 4
ARTICLE 09 PLANS, DRAWINGS, AND SPECIFICATIONS 17
ARTICLE 10 PROGRESS MEETINGS 18
ARTICLE 11 CRITICAL PATH METHOD (CPM) SCHEDULE 19
ARTICLE 12 WALK-THROUGH 22
ARTICLE 13 OWNER'S CONSTRUCTION REPRESENTATIVE 22
ARTICLE 14 FIELD OFFICE 23
ARTICLE 15 TELEPHONE SERVICE 23
ARTICLE 16 CONSTRUCTION FENCE 23
ARTICLE 17 PROJECT SIGN 24
ARTICLE 18 PARKING 25
ARTICLE 19 SANITARY FACILITIES 25
ARTICLE 20 RULES OF MEASUREMENT 25
ARTICLE 21 ALLOWANCES 26
ARTICLE 22 CONSTRUCTION CONTINGENCY FUNDS 26
ARTICLE 23 SEQUENCE OF CONSTRUCTION 27
ARTICLE 24 CRANE & MATERIAL HOIST OPERATIONS 28
ARTICLE 25 UTILITIES 28
ARTICLE 26 CLEANING AND TRASH REMOVAL 29
ARTICLE 27 BLASTING 30
ARTICLE 28 CUTTING AND PATCHING - NEW AND EXISTING WORK 31
ARTICLE 29 UNRELATED PROJECTS 31
ARTICLE 30 OWNER SUPPLIED MATERIALS 31
ARTICLE 31 REMOVED ITEMS 32
ARTICLE 32 INTERIOR ENCLOSURE AND DUST ENCAPSULATION 32
ARTICLE 33 UKIT COMMUNICATIONS AND NETWORK SYSTEMS 33
ARTICLE 34 EMERGENCY VEHICLE ACCESS 33
ARTICLE 35 SMOKE DETECTORS / FIRE ALARM SYSTEMS- EXISTING AND/OR NEW FACILITIES 33
ARTICLE 36 SURVEYS, RECORDS, and REPORTS 34
ARTICLE 37 SMOKING IS PROHIBITED 35
ARTICLE 38 ALTERNATES 35
ARTICLE 39 FIELD CONSTRUCTED MOCK UPS 35

ARTICLE 40 PROJECT COORDINATION VIA COMPUTER..... 36
ARTICLE 41 HOT WORK PERMITS 38
ARTICLE 42 INSURANCE..... 38
ARTICLE 43 KEY ACCESS..... 38
ARTICLE 44 CEILING CLEARANCE..... 39
ARTICLE 45 METAL ANCHORS..... 39
ARTICLE 46 LOADING DOCK (NOT USED) 39
ARTICLE 47 CONSTRUCTION PATH (NOT USED)..... 39
ARTICLE 48 HOSPITAL PROJECT PROCEDURE (NOT USED)..... 39
ARTICLE 49 WORKING HOURS/ACCESS: FOR MEDICAL CENTER/HOSPITAL (NOT USED) 39
ARTICLE 50 SECURITY BADGES AND MEDICAL CENTER SECURITY (NOT USED)..... 39
ARTICLE 57 CONTRACTOR/SUPERINTENDENT EXPERIENCE (NOT USED) 40
ARTICLE 58 COVID-19 POLICY……40

010000S01- Special Conditions – Construction Manager at Risk

ARTICLE 01 GENERAL INFORMATION

1.1 These Special Conditions are intended to modify, supplement, or delete from, applicable Articles of the General Conditions.

1.2 Where any Article of the General Conditions is supplemented by these Special Conditions, the Article shall remain in effect and the supplement shall be added thereto.

1.3 Where Special Conditions conflict with General Conditions, provisions of the Special Conditions take precedence.

ARTICLE 02 PERMITS AND FEES

The Lexington Fayette Urban County Government (LFUCG) Sewer Tap Fee shall be secured and paid for by the Construction manager. The sewer tap fee is for all projects, regardless of type, is presently calculated by the LFUCG and is based on $1.56 per square foot. The total fee is anticipated to be $702,000, based on 450,000 Total Square Feet.

ARTICLE 03 (NOT USED)

ARTICLE 04 CONSULTANT

4.1 Wherever in these Contract Documents reference is made to the Consultant, it shall be understood to mean JRA Architects or their duly authorized representatives. (See Article 2 of the General Conditions.)

ARTICLE 05 GEOTECHNICAL REPORT

5.1 No subsurface or geotechnical survey information is available at this time.

ARTICLE 06 TIME FOR COMPLETION

6.1 The time for Substantial Completion as further defined in Article 1 of the General Conditions shall be one hundred ninety-eight (198) consecutive calendar days from the date of commencement as specified in the Work Order letter, and Final Completion shall be thirty (30) days thereafter.

ARTICLE 07 LIQUIDATED DAMAGES

7.1 Should the Construction Manager fail to achieve Substantial Completion of the Work under this Contract on or before the date stipulated for Substantial Completion (or such later date as may result from extensions in the Contract Time granted by the Owner), he agrees that the Owner is entitled to, and shall pay the Owner as liquidated damages the sum of four hundred twenty-five dollars ($425.00) for each consecutive calendar day that Substantial Completion has not been met. See Article 3 of the Agreement.

7.2 Should the Construction Manager fail to achieve Final Completion of the Work under this Contract on or before the date stipulated for Final Completion (or such later date as may result from extensions in the Contract Time granted by the Owner), he agrees that the Owner is entitled to, and shall pay the Owner as liquidated damages the sum of four hundred twenty-five dollars ($425.00) for each consecutive calendar day until Final Completion is reached. See Article 3 of the Agreement.

ARTICLE 08 SUBMITTALS AND SHOP DRAWINGS

8.1 SUBMITTALS - GENERAL

8.1.1 The Construction Manager shall submit each set of Shop Drawings, product data, samples, and test and/or certification reports and samples as a separate item in UK E-Communication®. Projects not utilizing UK E-Communication® must submit all items electronically to the Consultant and the UK Project Manager and Administrative Coordinator.

8.1.2 All sample selections for color shall be submitted for approval at the same time. Color selections shall not be submitted individually.

8.1.3 Any deviation from the Contract Documents shall be noted on the transmittal form comment section.

8.1.4 All submittals are to be reviewed by the Construction Manager for compliance with the Contract Documents before submission for approval. All submittals are to be initiated by the Construction Manager. Submittals made directly to the Consultant by sub-contractors, manufacturers or suppliers will not be accepted or reviewed.

8.1.5 Re-submittals shall conspicuously note all changes from earlier submissions. Special notation by the Construction Manager shall be made to any changes other than those made in response to the Consultant's review.

8.1.6 Manufacturers shall, when requested by the Consultant, submit test reports prepared by reputable firms or laboratories certifying as to performance, operation, construction, wearability, etc., to support claims made by the manufacturer of the equipment or materials proposed for inclusion in the Work. Construction Manager shall also submit a list of three (3) installations where said equipment or materials have been in service for a minimum of five (5) years.

8.2 SUBMISSIONS - REVIEW

8.2.1 Review of submittals is only for compliance with the design concept and the contract documents. THE CONSULTANT SHALL NOT BE RESPONSIBLE FOR CHECKING DEVIATIONS FROM CONTRACT DOCUMENT REQUIREMENTS OR CHANGES FROM EARLIER SUBMISSIONS NOT SPECIFICALLY NOTED.

8.2.2 The following shall be verified prior to making submittals:

Field Measurements, Field Construction Criteria, Catalog numbers and similar data, Quantities and Capacities, and Compliance with requirements, including verification of all dimensions,

8.2.3 Review Stamp designations shall be as follows:

8.2.3.1 “NET = No Exceptions Taken”: Proceed with the Work, no corrections needed.

8.2.3.2
"FC= Furnish as Corrected”: Proceed with the Work, noting the corrections/conditions of the approval.

8.2.3.3 "RR = Revise and Resubmit": Do not proceed with the Work, as the submittal does not comply with the Contract Documents. Revisions to the submittal are required for approval. On projects utilizing UK E-Communication, “Send Back a Step” is used in lieu of “Revise and Resubmit"

8.2.3.4 "R = rejected": Do not proceed with the Work, the submittal is rejected.

8.3 SUBMISSIONS - SPECIAL PROVISIONS

8.3.1 In making a submittal, the Construction Manager shall be deemed to be making the following representations:

8.3.1.1 The Construction Manager understands and agrees that he shall bear full responsibility for the products furnished. The Construction Manager expressly warrants that products described in the attached submittal will be usable and that they conform to the Contract requirements unless specifically noted otherwise.

8.3.1.2 The Construction Manager understands and agrees that, without assuming design responsibility, he expressly warrants that products described in the attached submittal are capable of being used in accordance with the intent of the design documents and that they conform to the Contract requirements unless specifically noted otherwise.

8.3.1.3 The Construction Manager acknowledges that the Owner will rely on the skill, judgment, and integrity of the Construction Manager as to conformance requirements and subsequent usability.

8.4 SHOP DRAWING AND PROCUREMENT SUBMITTAL LOG

8.4.1 The Construction Manager, within ten (10) days after the Pre-Construction meeting, shall begin uploading submittals using UK E-Communication®, to generate a log fixing the dates for submission of Shop Drawings, special order material items, certifications, guarantees, and any other items required to be submitted to the Consultant for review, approval or acceptance. Projects not utilizing UK E-Communication® will submit a Shop Drawing Log provided by the Owner during the Pre-Construction Meeting.

8.4.2 The log shall track all submittals to date. The updated log shall then be reviewed and discussed at each progress meeting to determine items that may impact the construction schedule.

8.5 Shop Drawings

8.5.1 The Construction Manager shall review, approve, and submit Shop Drawings to the Consultant, in accordance with the Consultant's Shop Drawing & Procurement Submittal Log or UK E-Communication®, as herein detailed. By approving and submitting Shop Drawings, the Construction Manager represents that he has determined and verified all materials, field measurements, and field construction criteria related thereto, or will do so, and that he has checked and coordinated the information contained within such submittals with the requirements of the Work and of the Contract Documents.

8.5.2 The Construction Manager shall submit Shop Drawings required for the Work and the Consultant will review and take appropriate action. The review and approval shall be only for conformance with the design concept of the Project and for compliance with the information given in the Contract Documents. The approval of a separate item will not indicate approval of the assembly in which the item functions.

8.5.3 The Construction Manager shall make any corrections required by the Consultant for compliance to the Contract and shall return the required number of corrected copies of Shop Drawings and resubmit new samples until approved. The Construction Manager shall direct specific attention, in writing, or on resubmitted Shop Drawings, to revisions other than the corrections called for by the Consultant on previous submissions. The Construction Manager's stamp of approval on any shop drawing or sample shall constitute a representation to Owner and Design Consultant that the Construction Manager has either determined and verified all quantities, dimensions, field construction criteria, materials, catalog numbers, and similar date, or he assumes full responsibility for doing so, and that he has reviewed or coordinated each shop drawing or sample with the requirements of the Work and the Contract Documents.

8.5.4 Where a shop drawing or sample submission is required by the specifications, no related Work shall be commenced until the submission has been approved by the Design Consultant. A copy of each approved shop drawing and each approved sample shall be kept in good order by the Construction Manager at the site and shall be available to the Consultant.

8.5.5 The Consultant's approval of Shop Drawings or samples shall not relieve the Construction Manager from his responsibility for any deviations from the requirements of the Contract Documents unless the Construction Manager has in writing called the Consultant's attention to such deviation at the time of submission and the Consultant has given written approval to the specific deviation. Any approval by the Consultant shall not relieve the Construction Manager from responsibility for errors or omissions in the Shop Drawings.

8.5.6 All submittals are to be submitted electronically by the contractor. Shop Drawings submitted through UK E-Communication® shall be scanned and submitted in color. Mark-ups must be made using visible color when printed. Workflow in UK E-Communication® will be established during the workflow meeting. Each individual Shop Drawing shall have its respective specification number and description highlighted.

8.5.7 Where Shop Drawings include fire alarm, communication systems schematics, sprinkler systems, etc., a sepia of each drawing shall be submitted to the Consultant as part of the "Record" set of drawings.

8.6 SUBMISSIONS - SAMPLES

8.6.1 Office samples shall be of sufficient size and quantity to clearly illustrate functional characteristics of the product with integrally related parts and attachment devices, and full range of color, texture, and pattern.

8.6.2 Products shall not be used until the sample has been submitted to and approved by the Consultant.

8.6.3 A minimum of two (2) samples are required to be submitted to the Consultant for review and approval and will be distributed as follows:

a) One to be retained by the University;
b) One to be returned to the Design Consultant;
c) An additional sample or samples may be submitted, at the Construction Manager's option, for distribution to a third party.

8.6.4 Field samples (block, brick, etc.) of materials to be constructed at the site shall be submitted for review as required by the individual section of the Contract Documents.

8.7 SUBMISSIONS - OPERATION AND MAINTENANCE MANUALS

8.7.1 The University requires a minimum of one (1) bound copies and one (1) digital copy of the final installation, training, operation, maintenance, and repair manuals to be turned over to the Owner's Project Manager and approved for content by the Consultant by or before the time construction is 75% complete. Projects utilizing e-Communication will create digital copy from the Document Library (Closeouts) in e-Communication. The Closeout Log must contain individual line items for each physical copy submitted with corresponding PDF attachments. Operation and maintenance manuals and materials, where specified, for mechanical and electrical equipment and for operating items other than mechanical and electrical equipment must be submitted in PDF format with a separate PDF file for each item. In the event the Construction Manager fails to provide these required electronic submittals prior to reaching seventy-five (75%) completion, it is agreed that the Owner at its sole discretion may deduct from the current and subsequent Applications for Payment an amount deemed by the Owner to be sufficient to encourage prompt compliance with this contractual requirement, until such time as acceptable O&M manuals are received.

8.7.2 Manuals provided must be of sufficient detail to enable the Owner or others to install, calibrate, train, operate, maintain, service and repair every system, subsystem, and/or piece of equipment installed on or as part of this Contract. Manuals submitted through UK E-Communication® shall be scanned and submitted in color. Mark-ups must be made using visible color when printed. Each manual must contain:

8.7.2.1 Project Title, Project number, Location, dates of submittals, names, addresses and phone number for the Consultant, Construction Manager, and Construction Manager's Sub-contractors;

8.7.2.2 An Equipment Index that includes vendors' names, addresses, and telephone numbers for all equipment purchased on the Project;

8.7.2.3 Emergency instructions with phone numbers and names of contact persons on warranty items shall be uploaded to UK E-Communication®;

8.7.2.4 Copies of each system's air balancing record and each system's hydronic balancing record (1) physical copy and (1) digital copy in e-Communication;

8.7.2.5 Copy of valve tag list;

8.7.2.6 Copy of As-Built temperature control system drawings and components and sequence of operation;

8.7.2.7 Original copies of the following provided by the manufacturer:

Installation manuals	Instruction Manuals
Training manuals	Calibration manuals
Service Manual	Operation manuals
Parts list	Repair manuals
Reviewed Shop Drawings	Wire list
	Keying Bit List

8.7.2.8 Any Computer, Micro controller, and/or Microprocessor equipped equipment installed shall be provided with source code copies of all software and firmware (prom, e-prom, rom, other) supplied on this Contract; and

8.7.2.9 Copies of all inspection and guarantee certificates, manufacturers' warranties with the University of Kentucky listed as the Owner for all equipment provided and/or installed.

8.7.2.10 All manuals shall be as follows: Bound in hard cover three(3) ring (D-type) binder, 1", 1.5" or 2" maximum, indexed and in CSI format, tabbed (4,5,8 or 16th cut), no more than 80% binder fill, white vinyl, presentation type with clear vinyl view cover on front, back and spine and with pockets on front and back. Maximum drawing size in binder shall be folded 11"x17" and shall be hole punched and reinforcements added. Do not put drawings in pockets. Top of all drawings shall be at top or spine side of the manual. Complete drawings must be viewed without opening rings. Provide binders as manufactured by Universal Office Products, Des Plaines, IL. 1"(S# B2-20742), 1.5"(B2-20744), or 2"(B2-20746) or equal.

8.7.2.11 If the binder includes manuals from any one vendor covering several different model numbers, the model used on the Project must be highlighted.

8.7.2.12 Included in the front of the "Operation and Maintenance Manual" shall be a copy of the Interior and Exterior Finish plan and Schedule listing all finish materials, the manufacturer, the finish color, and the manufacturer's paint number.

8.7.2.13 Photograph album containing photos and negatives or digital images (.pdf format) showing buried utilities and concealed items shall be included.

8.8 SUBMISSIONS – AS - BUILT SET OF DRAWINGS

8.8.1 The Construction Manager shall submit one (1) electronic copy of As - Built set of drawings in PDF format indicating all deviations of construction as originally specified in the Contract Documents. These As-Built Drawings will compile information from the Construction Manager as well as all Sub-contractors.

The Construction Manager shall provide a qualified representative to update the As - Built set of drawings as construction progresses. As-Builts submitted through UK E-Communication® shall be scanned and submitted in color. Mark-ups must be made using visible color when printed.

8.8.2 The Construction Manager shall provide and utilize a camera to photograph the installation of buried utilities and concealed items. The Construction Manager shall provide standard 3 1/2" x 5" photographs with negatives, or digital images (.jpeg format), which shall be submitted as part of the Operation and Maintenance Manuals submission. These photos should be mounted in a bound album with labeling as to subject of photo, date, and Project. Such album is to be kept at job site with the As - Built Set of Drawings until submittal of same.

8.8.3 Approval of the Final Payment request will be contingent upon compliance with these provisions. The Construction Manager's As – Built set of drawings shall be delivered to the Consultant at their completion so that the Consultant may make any changes on the original contract drawings.

8.9 SUBMISSIONS - SAP EQUIPMENT LIST

8.9.1 Complete equipment list for use with SAP software in electronic spreadsheet format. Data is to be provided in Uniformat format with the information being provided for individual locations as noted in Attachment A – Uniformat Component List. Information is to be provided as follows (MCPPD or CPPD will provide blank Excel spreadsheets in electronic form for use in compiling the information, if desired)

8.9.2 All materials that require preventative maintenance (PM) are listed as in Attachment A. The equipment list is to be provided in Excel spreadsheet format and is to include the information listed in Attachment B

8.9.3 Required maintenance procedure listing each work task in Excel spreadsheet format as shown in Attachment C.

8.9.4 Required frequency of maintenance for the work tasks outlined in 8.9.3 above and included in the Attachment C spreadsheet

8.9.5 Listing of maintenance parts and items: i.e. filters, lubricants, etc. for each work task listed in 8.9.3 above.

8.10 SUBMISSIONS – MAINTENANCE MATERIALS

8.10.1 If specified, Maintenance/Replacement Materials, Spare Parts, and special maintenance tools for proper maintenance shall be provided by the CM at Risk.

ARTICLE 8.9 Attachment A – Uniformat Component List

SAP Object Type No.	Component Name
D5030.0232	Access Control Panel
D3050.0110	Air Conditioning Comp Rm Unit
D3030.0610	Air Conditioning Compressor
D3030.0620	Air Conditioning Condensing Unit
D3050.0120	Air Conditioning Pkg Rooftop Unit
D3050.0130	Air Conditioning Pkg Terminal Unt
D3030.0630	Air Conditioning Split System
D3050.0140	Air Conditioning Unit Package
D3050.0150	Air Conditioning Unit Window
D3050.0710	Air Curtain / Heater
D2090.0120	Air Dryer
D3010.0443	Air Eliminator
D3040.0110	Air Handling Unit
D5090.0220	Auto Transfer Switch - Electrical
	Automatic Door Operator
D2020.0330	Backflow Preventers
D3020.0110	Boiler, Steam System
D5030.0241	Camera
D5030.0231	Card Access System
D3030.0300	Chiller, Reciprocate
E1090.0250	Chutes & Collectors
D5010.0510	Circuit Breaker Panel
F1020.0230	Clean Rooms
F1020.0240	Cold Storage Rooms
D2090.0110	Compressor, Air
D3060.0250	Controls, Building System
E1090.0317	Cooler, Commercial
D3030.0510	Cooling Tower, Packaged
D2010.1300	Copper Silver Ion Equipment
D4090.0510	Dampers Fire
D4090.0500	Dampers Fire/Smoke
D4090.0520	Dampers Smoke
D3050.0400	Dehumidifiers
D2090.0200	Deionized Water System
E1090.0391	Dishwasher, Commercial
B2030.0160	Door, Auto Entrance
B2030.0100	Door, Exterior Entrance

C1020.0330	Door, Fire Separate
C1020.0320	Door, Smoke Partition
D2010.0800	Drinking Fountain
D5010.0350	Electric Switchboard
E1030.0310	Elevator, Dock Leveler
D1090.0120	Elevator, Dumbwait Electric
D1090.0130	Elevator, Dumbwait Hydraulic
D1010.0140	Elevator, Hydraulic Freight
D1010.0120	Elevator, Hydraulic Passenger
D1010.0230	Elevator, Platform Lift
D1010.0240	Elevator, Sidewalk Lift
D1010.0130	Elevator, Traction Freight
D1010.0110	Elevator, Traction Passenger
D1010.0220	Elevator, Wheelchair Lift
D2010.1100	Emergency Eyewash
D2010.1000	Emergency Eyewash/Shower
D5090.0810	Emergency Generator
D2010.1200	Emergency Shower
D3050.0600	Energy Recovery Unit
F1020.0260	Environmental Unit
D3040.0120	Fan
D3050.0520	Fan Coil Unit
D3040.0122	Fan, Axial
D3040.0121	Fan, Centrifugal
D3040.0410	Fan, Exhaust
D5030.0141	Fire Alarm Annunciator
D5030.0134	Fire Alarm AV Devices
D5030.0139	Fire Alarm Door Holder
D5030.0144	Fire Alarm Duct Detector
D5030.0133	Fire Alarm Heat Detectors
D5030.0136	Fire Alarm Horns
D5030.0131	Fire Alarm Panel
D5030.0135	Fire Alarm Pull Station
D5030.0137	Fire Alarm Signal Speaker
D5030.0132	Fire Alarm Smoke Detectors
D5030.0130	Fire Alarm System
D5030.0138	Fire Alarm Visual Signal Dev
D4030.0200	Fire Blanket & Cabinet
D4030.0100	Fire Extinguisher Cabinet
D4030.0300	Fire Extinguisher Wheeled
D4090.0300	Fire Extinguishing System, Clean

D4090.0200	Fire Extinguishing System, CO2
D4090.0400	Fire Extinguishing System, Dry Chemical
D4090.0100	Fire Extinguishing System, Foam
D4090.0000	Fire Extinguishing System, Other
G3010.0310	Fire Hydrant
E1090.0330	Food Cooking Equipment
E1090.0310	Food Stor/Prep Equipment
D2090.0400	Fuel Oil System
D3040.0460	Fume Hood System
D3020.0310	Furnaces
D2030.0260	Grease Trap
D3050.0580	Heat Exchanger
D2020.0260	Heater Domestic Water
D3050.0521	Heater, Cabinet Unit
D3050.0581	Heater, Cast Iron Radiator
D3050.0530	Heater, Fin Tube Radation
D3050.0540	Heater, Induction Unit
D3050.0560	Heater, Unit
D3050.0570	Heater, Unit Vent
F1040.0700	Heliport System
E1090.0340	Hood/Vent Equip
D3050.0300	Humidifier
E1090.0380	Ice Machines
D5020.0330	Light, Emergency Exterior
D5020.0230	Light, Emergency Interior
D5020.0231	Light, Exit
E1020.0831	Medical Air Compressor
E1020.0900	Medical Gas Alarm
E1020.1000	Medical Gas Area Alarm
E1020.0840	Medical Gas Auto Pressure Switch
E1020.0834	Medical Gas Manifold
E1020.0835	Medical Gas N2O
E1020.0839	Medical Gas Outlet
E1020.0837	Medical Gas Shut-off Valve
E1020.0830	Medical Gas System
E1020.0838	Medical Nitrogen
E1020.0810	Medical Sterilizer Equipment
E1020.0832	Medical Vacuum Pump
D5010.0711	Motor Control Center
D5010.0720	Motor, Electric
D5030.0431	Nurse Call System

E1090.0210	Packaged Incinerator
D3010.0550	Packaged Solar Equipment
D5030.0420	Paging Systems
C1010.0180	Partition Fire Rated
C1010.0190	Partition, Smoke
D1090.0141	Pneumatic Tube Blower
D1090.0142	Pneumatic Tube Station
D1090.0140	Pneumatic Tube System
D1090.0143	Pneumatic Tube Transfer Unit
D3010.0430	Pump
D3030.0710	Pump, Air Source Heat
D3010.0432	Pump, Chilled Water
D2020.0222	Pump, Domestic Hot Water Recirculation
D2020.0221	Pump, Domestic Water Booster
D4010.0111	Pump, Fire
D3010.0431	Pump, Heating Water
D4010.0112	Pump, Jockey Fire
D3030.0720	Pump, Rooftop Heat
D3010.0433	Pump, Steam
D2040.0270	Pump, Sump
D2030.0330	Pump, Waste
D2020.0220	Pump, Water Booster
D3030.0730	Pump, Water Heat
E1090.0315	Refrigerator/Freezer, Commercial
D3040.0123	Return Air Fan
D2090.1200	Reverse Osmosis System
D3030.0420	Scroll Chiller
D4010.0300	Sprinkler, Combo System
D4010.0400	Sprinkler, Deluge System
D4010.0200	Sprinkler, Dry-Pipe
D4020.0100	Sprinkler, Standpipe
D4010.0100	Sprinkler, Wet-Pipe
D3050.0310	Steam Generator
D5010.0840	Switchgear, Medium Voltage
D3010.0441	Tank, Expansion Compressor
D2020.0310	Tank, Expansion Domestic
D2020.0320	Tank, Expansion Reheat
D2090.0410	Tank, Fuel Oil
D3010.0444	Tank, Steam Flash
D5010.0210	Transformer, Low-Volt 2nd
D5010.0410	Transformer, Low-Volt Inter

D5010.0110	Transformer, Main
D3020.0150	Trap, Steam
D5090.0110	UPS - Computer
D5090.0120	UPS - Other
D2090.1310	Vacuum Pump
D3010.0435	VFD - Pump
D3040.0190	VFD HVAC
D5010.0850	VFD/VSD
E1090.0316	Walk-in-Refrigerator
D2090.0210	Water Softener Equipment
D3010.0490	Water Treatment Equipment

ARTICLE 8.7.3 Attachment B – Equipment List Spreadsheet Data Categories

Uniformat	
Component ID	
Component Name	
Description	
Name	
Equipment No.	MCPPD or CPPD will enter this data
Model No.	
Room Location	
Functional Location	MCPPD or CPPD will enter this data
Manufacturer	
Supplier	
Installing Contractor	
Serial No.	
Main Work Center	MCPPD or CPPD will enter this data
Comments(30 char's)	MCPPD or CPPD will enter this data
Critical	MCPPD or CPPD will enter this data
JCAH Code	MCPPD or CPPD will enter this data
Patient Room?	MCPPD or CPPD will enter this data
Vendor ID	MCPPD or CPPD will enter this data
Vendor Type	MCPPD or CPPD will enter this data
Vendor - Other Info	MCPPD or CPPD will enter this data
Equipment Life	MCPPD or CPPD will enter this data
Area Serviced	
Contains Lead?	
Contains Asbestos?	
Contains PCBs?	
Motor Frame	
Motor Style	
Motor HP	
Motor Phase	
Motor Volts	
Motor RPM	
Fan CFM	

Fan RPM	
Fan Static	
Fan Type	
Fan RPM 2	
Pump Head	
Pump Inlet	
Pump GPM	
Pump Outlet	
Motor Oper Amps	
Condition	MCPPD or CPPD will enter this data
Disconnect Location	
Motor FLA	
Belts	
Filters	

ARTICLE 8.7.3 Attachment C - Example Preventative Maintenance Procedures

Description	Name	Equipment No.	Frequency	Maintenance Procedure	Maintenance Parts & Items
Air Handling Unit	AHU-1	M-12345	Monthly	Check Belts	
Air Handling Unit	AHU-1	M-12345	Quarterly	Grease bearings	Grease type xyz
Air Handling Unit	AHU-1	M-12345	Annually	Replace Belts	Belt model abc-123
Air Handling Unit	AHU-2	M-98765	Monthly	Check Belts	

The blue highlighted column will be filled in by MCPPD or CPPD.

ARTICLE 09 PLANS, DRAWINGS, AND SPECIFICATIONS

9.1 The successful Construction Manager can purchase any number of sets of plans and specifications from Lynn Imaging, Lexington, Kentucky (http://www.ukplanroom.com/ or Phone Lynn Imaging @1.800.888.0693 or 859.255.1021). The Construction Manager will be required to pay Lynn Imaging for the cost of duplication for all sets required.

9.2 The University will provide two sets of the 'Official Contract Documents' book to the successful Construction Manager. One set is to be for his office and the other set is for the jobsite.

9.3 All drawings, specifications and copies, thereof, prepared by the Consultant, are the property of the University of Kentucky. They are not to be used on other Work.

ARTICLE 10 PROGRESS MEETINGS

10.1 In addition to specific coordination and pre-installation meetings for each element of Work, and other regular Project meetings held for other purposes, progress meetings will be held as outlined at the Preconstruction Meeting. Each entity then involved in planning, coordination or performance of Work shall be properly represented at each progress meeting. The following areas will be covered at each progress meeting: current status of work in place, CM's review of upcoming work (1 month look ahead), schedule status, upcoming outages, new outage requests, shop drawings due from contractors, shop drawings being reviewed, outstanding RFI's, outstanding proposed change orders, change orders, new business, As-Built updated, close-out documents status, defective work in place issues, review "pencil copy" of payment application, safety issues and new business or other issues not covered above.. With regard to schedule status, discuss whether each element of current work is ahead of schedule, on time, or behind schedule in relation with updated progress schedule; determine how behind-schedule Work will be expedited, and secure commitments from entities involved in doing so; discuss whether schedule revisions are required to ensure that current Work and subsequent Work will be completed within Contract Time; and review everything of significance which could affect the progress of the Work.

10.2 Construction Manager shall prepare and submit at each progress meeting an updated schedule indicating Work completed to date and any needed revisions.

10.3 With the express purpose of expediting construction and providing the opportunity for cooperation of affected parties, progress meetings will be held and attended by representatives of:

(1) The Owner's Project Manager
(2) The Consultant.
(3) Construction Manager.
(4) Subcontractors as requested.
(5) Others requested to attend (as deemed necessary by CPMD).
(6) Physical Plant Division Representative.

10.4 A location near the site will be designated where such progress meetings will be held. Participants will be notified of the dates and times of the meetings by the Consultant.

ARTICLE 11 CRITICAL PATH METHOD (CPM) SCHEDULE

11.1 Construction Manager shall prepare Critical Path Method (CPM) type schedules in accordance with General Conditions Article 32 with separate divisions for each major portion of the Work or operation. The schedules submitted for this Project shall be prepared using Primavera P6 scheduling software. If approved by the University, and at the sole discretion of the University, schedules submitted using earlier versions of Primavera scheduling software (Primavera SureTrak or Primavera P3) may be converted to Primavera P6 format by the University for review purposes. However, the University will not be responsible for any inaccuracies that may result from such conversions. All schedule submittals shall include a copy in portable document (.pdf) format as well as a complete copy of the schedule in Primavera P6 electronic file (.xer) format.

11.1.1 CPM schedules shall be based on generally accepted good practices for the development of construction schedules including limited use of long activity durations, long total float values or relationships based on leads or lags. Schedules shall include all activities necessary for performance of the work showing logic (sequences, dependencies, etc.) and duration of each activity. The schedules shall provide information for all elements of the Work in sufficient detail to accurately demonstrate the relative importance of each activity to the successful completion of the Project including but not necessarily limited to the following.

a) Activities to be performed by the University or the Design Team.
b) Activities describing time sensitive submittals and submittal processing.
c) Activities describing fabrication and delivery of key materials or equipment.
d) Activities to identify equipment start-up and testing, system commissioning, and Owner training.
e) Activities to identify Owner Furnished /Contractor Installed and Owner Furnished / Owner Installed material or equipment.
f) Activities to denote all required inspections by the Owner or Design Team, and inspections by state or local agencies including receipt of necessary Certificate(s) of Occupancy.
g) Activities to identify all dates and durations for major utility outages requiring coordination with the Owner and the Owner's operations.
h) Activities to identify all contractually mandated constraints. Non-contractual constraints shall not be included in the Initial or Final Baseline schedules without explanation. Non-contractual constraints are for the convenience of the Construction Manager, shall not be a basis for delay claims, and may be temporarily removed by the University when schedules and updates are reviewed.
i) Software coding of each activity to identify the applicable Phase; area and/or sub area where the work occurs; the trade subcontractor or party responsible for completion of the activity; whether the activity is a design activity, a bidding or procurement activity, a submittal activity, or a construction activity; and whether the activity is potentially weather dependent.
j) The University may, at its sole discretion, also require that each activity be coded to indicate the section of the Technical Specifications that applies to the work.

11.1.2 Schedules shall include divisions for Work to be accomplished remote from the central construction site, (for example, modular or prefabricated units to be constructed off-site, or utilities to the site from outside the construction site such as chilled water, steam, electrical, communications, and fire service). Such Work shall be scheduled so that disruption resulting from construction will be minimized. Start dates and completion dates for utility construction must be maintained and completed in the shortest reasonable time.

11.2 An Initial Baseline Schedules shall be submitted to the Consultant and to the Owner within thirty (30) calendar days after award of the first bid Package or trade contract, and shall include detailed information regarding Work to be performed during the first ninety (90) days of the Project as well as milestone dates based on hammock or Level of Effort type activities that identify all major elements of the remainder of the Work. Any necessary revisions to the Initial Baseline Schedule shall be completed prior to submittal of the Final Baseline Schedule.

11.3 The Final Critical Path Baseline Schedule shall be submitted to the Consultant and to the Owner within seventy five (75) calendar days after award of the first bid Package or trade contract, shall be consistent with the information contained in the Initial Baseline Schedule prepared in accordance with Article 11.2 above, shall be a complete and comprehensive description of the Construction Manager's plan to complete the Work in accordance with the Contract, shall include all activities necessary to complete the Work, and shall show the complete sequence of construction by activity, with dates for beginning and completion of each element of construction as well as an indication of whether the activity might reasonably be delayed or impacted by bad weather. Sub-schedules shall be provided as may be necessary to define critical portions of the entire schedule.

11.3.1 If the Project is to be constructed in multiple phases or using multiple Bid Packages, the date for the start of work on each phase of the Project shall be the date on which the University approves the award of the first Trade Contract for work in that phase or Bid Package.

11.3.2 A separate schedule including decision dates for selection of finishes and delivery dates for Owner furnished items, if any, shall be provided showing submittal dates for Shop Drawings, product data, and material samples, as appropriate.

11.3.3 A separate schedule shall be provided identifying dates and durations for major utility outages requiring coordination with the Owner and the Owner's operations.

11.3.4 Activities, including Outages, which require action by or which are the responsibility of, the Owner or the Consultant under the terms of the Contract shall be properly indicated, and the responsible party shall be identified in the CPM schedule.

11.4 The Consultant will review schedules only for compliance with the intent of the Contract Documents. Such review shall not relieve the Construction Manager of any responsibility for compliance with the provisions of the Contract nor shall such review or any review comments constitute an amendment or modification of the Contract requirements. The Construction Manager shall be solely responsible for the means and methods to be employed to assure constructions proceeds in accordance with the submitted schedule and for identifying all necessary activities, establishing activity sequencing and assigning activity durations and relationships to assure that the CPM schedule is an accurate and comprehensive description of the plan for the Work.

11.5 Up-dated progress schedules shall be submitted to the Consultant and to the Owner concurrently with each Application for Payment to indicate progress on each remaining activity as of the last working day prior to the date of the submittal and the projected completion date of each activity. Updated CPM schedules shall show the accumulated percentage of completion of each activity, and total percentage of Work completed, as of the data date of the update. Each submittal of an update to the schedule shall include a narrative report that identifies and explains activities modified since the previous submittal, major changes in scope and other identifiable changes, problem areas, anticipated delays and impact on the schedule, and shall describe corrective action taken or proposed, and its effect. Schedules will be uploaded in UK E-Communication®'s Schedules Item Log.

11.6. Submittals shall include a copy in portable document (.pdf) format as well as a complete copy of the schedule in Primavera P6 electronic file (.xer) format along with a transmittal letter and related narrative report.

11.7 Copies of updated CPM schedules are to be provided to the job site file and, as appropriate, to subcontractors, suppliers, and other concerned entities, including separate contractors. Recipients are to be instructed to promptly report, in writing, any problems anticipated in meeting the projected dates shown in the schedules.

11.8 The processing of all progress payments is contingent upon the submission of an updated CPM schedule. Only payment for bonds and limited Construction Manager mobilization costs will be approved for processing prior to receipt of the Initial and Final Baseline schedules

11.9 The processing of all change orders requesting a time extension to the contract is subject to the terms of Article 21 of the General Conditions to this Contract and is contingent upon the submission of a CPM schedule showing that the change order does indeed impact the contractually required completion dates for the Work. Time extensions for Change Orders that do not impact the contractually required completion dates for the Work will not be considered.

11.10 All time extensions shall be negotiated and made full, equitable and final, and incorporated in a revised CPM schedule at the time of Change Order issuance. No reservation of rights shall be allowed.

11.11 Float available in the schedule at any time shall not be considered for the exclusive use of either party to the contract, but will be a resource available to both the Owner and the Construction Manager. No time extensions will be granted for a delay unless the delay impacts the Project critical path as shown in the updated Project schedule most recently submitted to the Owner prior to the event, consumes all available float or contingency time, and extends the Work beyond the then current Contract completion date(s).

ARTICLE 12 WALK-THROUGH

12.1 After the "Work Order" is issued but before Work by the Construction Manager is started, a walk-through of the area is required to document the condition of the space, surfaces, or equipment. It is the responsibility of the Construction Manager to schedule the walk-through with the Owner's Project Manager, the Consultant, and other interested parties.

12.2 During the walk-through, Construction Manager shall identify all damaged surfaces or other defective items that exist prior to construction.

12.3 The walk-through shall be attended by Owner's Project Manager, a Representative of the user of the facility, the Construction Manager and the Consultant

12.4 Written documentation of the walk-through is to be provided by the Consultant with copies distributed to all parties. Polaroid type color photographs are to be provided and labeled by Construction Manager and one (1) copy of such photographs are to be given to Consultant. (Digital photos in a .jpg format are acceptable if submitted on digital media storage) All parties attending the walk-through agree on the list of damages.

ARTICLE 13 OWNER'S CONSTRUCTION REPRESENTATIVE

13.1 The Owner may have full time personnel or representatives on this job. If so, the Construction Manager is to provide, at no additional cost to the Owner, an office for the duration of the Project specifically for the use of Owner personnel. The office should be furnished with all required utilities, including HVAC, and the following:

- **3** Desks
- **3** Desk chairs
- **3** Side chairs
- **3** 4-drawer filing cabinets
- **3** telephones
- **3** DSL / cable modem connections
- **1** Facsimile machine
- **1** Layout table
- **1** hanging plan rack

ARTICLE 14 FIELD OFFICE

14.1 Construction Manager shall make his own provision for field office for his own personnel and for incidental use by their Subcontractors. Quantity and location are subject to approval of the Consultant and the Owner's Project Manager.

14.2 Construction Manager is not required to provide a field office for use by the Owner or Consultant.

ARTICLE 15 TELEPHONE SERVICE

15.1 Construction Manager shall arrange through UKIT Communications and Network Systems for installation of on-site phone, internet and other communications services. Telephone service during the length of construction shall be paid for by the Construction Manager. (Cell phone/Nextel service in lieu of UKIT Communications and Network Systems phone service may be utilized at Construction Manager's option.)

ARTICLE 16 CONSTRUCTION FENCE

16.1 Construction fencing will be designed and erected around job sites where there is a possibility of injury to employees, students or the public. Special precautions must be taken to protect the visually impaired, disabled, children and others using the University facilities. During active excavation/trenching operations, fencing shall be erected to prevent unauthorized entry into the site. All fencing shall comply with the current requirements of the International Building Code except where the following requirements are more stringent.

16.1.1 All job site perimeter fencing within 5 feet of a walkway, street, plot line, or public right-of-way shall be 8 feet in height. Perimeter fencing that blocks sidewalks must include signs directing pedestrians to a safe walkway or crosswalk.
Signage may be attached to the fence, but may also be required to inform pedestrians of sidewalk closures and detours prior to arriving at the closed area. Construction Manager shall provide electrical pedestrian and general lighting along the top rail of the perimeter of the construction site fence to provide a minimum illumination level of 1.5 foot candles. Pedestrian and perimeter fence lighting shall be installed in conduit, raceway, and/or pathway system properly supported to the perimeter fence. Open or flexible cabling will not be acceptable.

16.1.2 All job site perimeter fencing more than 5 feet from a walkway, street, plot line, or public right-of-way shall be a minimum of 6 feet in height unless International Building Code requirements are more restrictive due to the height of the structure and setback.

16.1.3 All fencing shall be of a woven material such as chain link or a solid type fence. Fencing shall include gates required for construction operations. Gates shall be lockable with both the Construction Manager's lock, and a lock provided by the Owner. Lock by Owner shall be keyed for the University Best GA key core. All locks to be “daisy-chained” to provide access to the Owner.

16.1.4 It shall be the Construction Manager’s responsibility to determine the proper quality of materials and methods of installation of the fencing, with the understanding that it must be maintained in good condition, good appearance, rigid, plumb, and safe throughout the construction period. The fence does not have to be new material. The fence is to be erected on fence posts securely anchored in the ground. Provide a top bar or, with prior approval of the Owner, a wire shall be run through the top of the fence and attached to the end posts. A tension control device shall be installed as necessary. Use of sandbags, concrete weights, stakes, etc. to hold fence posts in place are not allowed. Penetrations in pavement or landscape walking surfaces may not be made without the approval of the Owner. Any damage caused by the fence installation shall be repaired in a manner satisfactory to the Owner. When fencing is to remain in place for 6 months or more a green fabric mesh must be provided for the full height and length of the fence. Fabric should be omitted for one section of fencing where blind corners occur or at pedestrian/vehicle intersections.

16.1.5 The Construction Manager shall be responsible for removing and replacing any fence sections and/or posts necessary for access to the site on a daily basis. The Construction Manager shall police such conditions to assure the fence and posts are reset in a timely manner and are specifically in place at the close of the working day.

16.1.6 If the Construction Manager fails to comply with the requirements of this Article 16, the Owner may proceed to have the work done and the Construction Manager shall be charged for the cost of the Work done by unilateral deductive change order.

16.1.7 Plastic construction fencing is not acceptable as a perimeter protection fence.

ARTICLE 17 PROJECT SIGN

17.1 The Construction Manager shall furnish, install and maintain a Project sign during this Project. This sign shall be 4' x 8' x 3/4" exterior grade plywood mounted on 4" x 4" posts. Design shall be as provided by the Owner at a later date and shall include the name of the Owner, Project, Consultant, and Construction Manager.

17.2 No signs, except those attached to vehicles or equipment, may be displayed without permission from the Consultant and the Owner's Project Manager. No political signs will be permitted.

ARTICLE 18 PARKING

18.1 The University of Kentucky will make available for purchase by the Construction Manager of up to four (4) parking permits. The category of parking permit and location of parking is determined by the Director, Parking and Transportation Services, or a designee. Parking permits may be purchased by the Construction Manager to be used by the Construction Manager and/or the Construction Manager's subcontractors and employees during the construction period. The cost of each permit is based on the pro-rata annual cost and may be purchased from Parking Services, 721 Press Avenue, after the Contract is executed. Necessary documents required to purchase the passes will be available at the Pre-Construction Conference.

18.2 The Director, Parking and Transportation Services, or a designee will determine if parking is available for employees of the Construction Manager and subcontractors in the K lots at Commonwealth Stadium or elsewhere on Campus. The Construction Manager will be given thirty (30) days' notice should conditions change that will affect parking at the designated parking area and it is necessary to relocate parking or terminate parking privileges. If parking is available, permits may be purchased from Parking Services, 721 Press Avenue at the appropriate monthly cost.

ARTICLE 19 SANITARY FACILITIES

19.1 At the beginning of the Project, before any Work is started, the Construction Manager shall furnish, install and maintain ample sanitary facilities for the workforce. Permanent toilets in the existing building shall not be used during construction of the Project. Drinking water shall be provided from an approved safe source, piped or transported as to be kept clean and fresh and served from single service containers or satisfactory types of sanitary drinking stands or fountains. All such facilities and services shall be furnished in strict accordance with existing governing health regulations.

ARTICLE 20 RULES OF MEASUREMENT

20.1 Rules of Measurement shall be established by the Consultant in the field. Actual measurement shall be taken in the field. These amounts shall become binding upon the Construction Manager and be adjusted as before mentioned.

20.2 The Construction Manager shall pay for and coordinate through the Consultant and/or the Owner's Project Manager all associated Work by utility companies including relocation of utility poles, installation of new street lights, relocation of overhead or underground lines, and any other Work called for on the Plans and in the Specifications.

ARTICLE 21 ALLOWANCES

21.1 As stated in the General Conditions to the Contract, the Construction Manager shall have included in the Contract Amount all costs necessary to complete the Work. Costs based on "allowances" shall be permitted only for objectively quantifiable items and only with the prior written approval of the Owner. No allowances shall have been included in the calculation of the Construction Manager's fixed fee quotation in par. 8.0 of the RFP.

21.2 Costs based on allowances may be included in Subcontract bid packages only with the prior written approval of the Owner, and only for objectively quantifiable material items.

21.3 Any allowance amounts included in a Subcontract bid package, but not expended for the approved task during the course of the work of that Subcontract, shall be deducted from the Construction Manager's contract by Change Order. Any additional amounts necessary to pay for additional cost of an allowance in a Subcontract bid package shall be funded from the Construction Contingency Fund.

21.4 The University of Kentucky has entered into a price contract agreement with SimplexGrinnell for procurement of fire alarm and security systems. SimplexGrinnell will provide an allowance for this project which may include Fire Alarm Equipment and Security Equipment, including all required cable/wire, labor to install cable and wire and terminations of SimplexGrinnell supplied devices and panels. SimplexGrinnell will be a sub-contractor under a trade contract.

21.4.1 The Construction Manager shall include an allowance of Zero ($0.00) for the work by SimplexGrinnell in the appropriate trade contractor's scope of work.

21.4.2 The electrical contractor is to provide and install conduits and back boxes/junction boxes. All conduits will include a pull string. SimplexGrinnell will furnish and install all fire alarm and security equipment and wiring. An allowance amount will be provided by JCI, in coordination with the MEP sub-consultant based on the unit price contract between the University and JCI.

ARTICLE 22 CONSTRUCTION CONTINGENCY FUNDS

22.1 The Owner shall include an amount in the Project construction budget not to exceed one percent (1%) of the total cost of the construction, including the Construction Manager's fixed fee, as a Construction Contingency Fund. The following are general / typical categories of changes to the Work that may, with the Owner's prior written specific approval, be funded from this source:

22.1.1 Reasonable errors & omissions in the Construction Manager's bidding and scoping processes;

22.1.2 Reasonable costs associated with schedule recovery that is not a direct result of the construction managers or a trade contractor's failure to perform;

22.1.3.Any costs or expenses incurred by the Construction Manager, for provision of management services necessary to complete the Project in an expeditious and economical manner consistent with the Contract for Construction and the best interests of Owner, that were not included in the Construction Manager's General Conditions Cost as submitted in the original fee proposal

22.1.4 Amounts necessary to fund cost overruns in approved allowance items within Subcontract bid packages, as described in Article 21.3, above.

ARTICLE 23 SEQUENCE OF CONSTRUCTION

23.1 (Not Used)

23.2 All materials and equipment are to be brought into the project site from the approved staging location and are not to be brought through the existing buildings or loading docks. Any and **all** exceptions shall be approved by, and closely coordinated with, the Owner's Project Manager in advance of scheduling or performing the work.

23.2.1 The Construction Manager shall coordinate any road and sidewalk closings, utility disruptions, etc. which will affect the use of the existing building(s) with the Owner's Project Manager prior to commencing that Work.

23.3 The adjacent buildings and public areas will remain in use and the Owner shall have access to the existing building(s) throughout the duration of the Project. The Construction Manager shall coordinate construction activity to assure the safety of those who must cross the Project site and shall provide and maintain the necessary barriers and accommodations for a completely safe route of accessibility. The Construction Manager is to insure that all exits provide for free and unobstructed egress. If exits must be blocked, then prior arrangements must be made with the Owner's Project Manager.

23.4 The Construction Manager shall cooperate with the Owner in minimizing inconvenience to, or interference with normal use of existing buildings and grounds by staff, students, other Contractors, or the public. Construction Manager shall conduct operations to prevent damage to adjacent building structures and other facilities and in such a manner to protect the safety of building's occupants.

23.5 Special effort shall be made by the Construction Manager to prevent any employee from entering existing buildings for reasons except construction business. In particular, use of toilets, drinking fountains, vending machines, etc. is strictly prohibited.

ARTICLE 24 CRANE & MATERIAL HOIST OPERATIONS

24.1 Construction Manager shall provide appropriate barriers around crane and material hoist to protect pedestrian and vehicular traffic around operating area. When crane is operating or moving, flag men provided by Construction Manager shall be utilized to prevent pedestrian and vehicular traffic from crossing pathway of crane lift. Construction Manager's flag men shall coordinate these activities with the appropriate security personnel.

24.2 Crane and material hoist shall be safely secured and inaccessible during non-operating hours. Construction Manager shall coordinate operation or erection of a crane or material hoist in the vicinity of the Medical Center with Medical Center Aeromedical Operations (Med-evac helicopter).

24.3 Any damage to trees, shrubs or plant material at the placement of crane or material hoist shall be repaired by tree surgery or replaced as directed by Consultant.

ARTICLE 25 UTILITIES

25.1 When the various building systems are energized and connected to Owner's utility systems, but prior to turnover to and occupancy by the Owner, the Construction Manager is responsible to reimburse the Owner for Owner furnished utilities. These utilities include but not limited to steam, chilled water, domestic water, and electricity, provided by the Owner up to the date of Substantial Completion. Reimbursement will be payable monthly via a deductive change order to the contract. Unit costs for campus are as follows:

25.1.1 Steam is $15.00/million BTU (1000 lb.) condensate measured through the building condensate meter (all condensate is to be returned).

25.1.2 Chilled Water is $11.00/million BTU (1000 lb.) measured through the building BTU meter.

25.1.3 Electricity is $0.08/KWH measured through the building electric meter.

25.1.4 Water is supplied by Kentucky American Water Company (KAWC). Construction Manager shall pay KAWC directly until the Owner's beneficial occupancy date. The Construction Manager shall pay KAWC directly for fire service.

25.1.5 Construction Manager shall furnish gas meter and Columbia Gas Company directly for service until the until the Owner's beneficial occupancy date.

25.1.6 Construction Manager shall obtain from and pay UKIT Communications and Network Systems for the use of telephone services.

25.2 UTILITY OUTAGES

25.2.1 Interruption of Utilities and Services: No utilities or services may be interrupted without full consent and prior scheduling of the Owner. Owner approval is required in writing for each disruption.

25.2.1.1 ENTIRE BUILDING OUTAGE. The Owner's Project Manager is the Construction Manager's contact with the University for requesting Utility Outages. The Owner's Project Manager will contact the proper departments and divisions within the University and receive approval from those units prior to allowing a planned outage to occur. The established standard within the University Departments and Divisions of an entire building or group of buildings shall be three weeks written notice. The written notice shall include the type of utility to be interrupted, reason for outage, length of outage, what will be affected by the outage, and a statement of whether or not the materials are on hand to complete the Work. If a specific time is desired for the outage it should be included. The Owner's Project Manager will insure that all parties affected are contacted and that a time which is least disruptive to all parties is selected. At the appointed outage time, Work shall begin and proceed continuously with all required manpower until Work is complete at no added cost to the University. The Owner's Project Manager will then notify all affected departments or divisions.

25.2.1.2 SECTION OF A BUILDING OUTAGE. The Owner's Project Manager is the Construction Manager's contact with the University for requesting Utility Outages. The Owner's Project Manager will contact the proper departments and divisions within the University and receive approval from those units prior to allowing a planned outage to occur. The established standard within the University Departments and Divisions of a section of a building shall be a written request one week prior to outage. The written request shall include the type of utility to be interrupted, when the outage is desired, reason for outage, length of outage, and what will be affected by the outage. The Owner's Project Manager will insure that all parties affected are contacted and that a time which is least disruptive to all parties is selected. At the appointed outage time Work shall begin and proceed continuously with all required manpower until Work is complete at no added cost to the University. The Owner's Project Manager will then notify all affected departments or divisions.

ARTICLE 26 CLEANING AND TRASH REMOVAL

26.1 The Construction Manager shall keep clean the entire area of new construction and shall keep streets used as access to and from the site free of mud and debris.

26.2 All exit ways, walks, drives, grass areas, and landscaping must be kept free from debris, materials, tools and vehicles at all times. Trim weeds and grass within the site area.

26.3 Upon completion of the Work, Construction Manager shall thoroughly clean and re-sod grass areas damaged to match existing areas.

26.4 All utility markings are to be made with water based marking paint with low Volatile Organic Compounds (VOC's) and high solids.

26.5 Upon Completion of the project, buried utility paint markings sprayed on walks and hardscapes are to be removed by non-destructive means such as pressure washing. Do not use chemicals. If a washed area is noticeable, the entire surface must be washed and or blended to match surrounding areas.

26.6 The Construction Manager shall be responsible for removal from the site of all liquid waste or other waste (i.e., hazardous, toxic, etc.) that requires special handling on a daily basis.

26.7 Dumpsters will be provided and maintained by the Construction Manager.

26.8 During Work at the Project site, the Construction Manager shall clean and protect Work in progress and adjoining Work on a continuing basis. Construction Manager shall apply suitable protective covering on newly installed Work where needed to prevent damage or deterioration until the time of Substantial Completion. Construction Manager shall clean and perform maintenance on newly installed Work as frequently as necessary through remainder of construction period.

26.9 The Construction Manager shall be responsible for daily cleaning of spillage's and debris resulting from his and his Subcontractor's operations, (includes removal of dust and debris from wall cavities), and for providing closed, tight fitting (dustproof if required), waste receptacles to transport construction debris from the work area to the dumpster. Broom clean all floors no less than once a week. The Construction Manager shall empty such receptacles into the trash container when full or when directed to be emptied by the Consultant and/or Owner's Project Manager, but not less than weekly. The use of the Owner's waste and trash receptacles is strictly prohibited, except as otherwise provided by the Project specifications.

26.10 Failure to comply with the above requirements shall be cause for stopping work until the condition is corrected.

ARTICLE 27 BLASTING

27.1 There shall be no blasting under any conditions on University of Kentucky property unless specified in these Special Conditions.

ARTICLE 28 CUTTING AND PATCHING - NEW AND EXISTING WORK

28.1 New Work - Cutting and patching shall be done by craftsmen skilled and experienced in the trade or craft that installed or furnished the original Work. Repairs shall be equal in quality and appearance to similar adjacent Work and shall not be obviously apparent as a patch or repair. Work that cannot be satisfactorily repaired shall be removed and replaced.

28.2 Existing Construction - Refer to Architectural, Mechanical, and Electrical drawings for cutting and patching. All new Work shall be connected to the existing construction in a neat and workmanlike manner, presenting a minimum of contrast between old and new Work. Do all patching of the existing construction as may be required for the new construction to be completed. Necessary patching, closing of existing openings, repairing and touching up shall be included as required for a proper, neat and workmanlike finished appearance. Any existing item that is to remain and is damaged during construction shall be replaced at the Construction Manager's expense.

ARTICLE 29 UNRELATED PROJECTS

29.1 Unrelated construction projects may be under way in the vicinity of this Project or the site utility work during the course of the Work related to this Project. The Construction Manager for this Project must coordinate with any other contractors regarding overlapping areas. See Article 42 - Separate Contracts of the General Conditions.

ARTICLE 30 OWNER SUPPLIED MATERIALS

30.1 Owner, in an effort to expedite this Project, has pre-ordered certain long lead time items. This list will be developed as approved by the UK Project Manager and Design Team at the completion of the Construction Documents / Phase 3 of design. The following is the list of material that has been pre-ordered:

1. **NONE**

30.2 All Pre-Ordered Material was specified to be shipped to the **Health Education Building**. It will be the Construction Manager's responsibility to receive and off load the Pre-Ordered Material. If there is damage to the Pre-Ordered Material, then the Construction Manager is to notify the Owner's Project Manager immediately so that the Owner can seek replacement material.

ARTICLE 31 REMOVED ITEMS

31.1 The following is a list of items to be turned over to the Owner by the Construction Manager after removal by the Construction Manager. If there are additional items listed in the drawings to be turned over to the Owner, but not listed here, it shall be construed as being listed here.

1. **NONE**

31.2 All items which are identified to be turned over to the Owner must be treated with the utmost of care and protected from damage during removal and transport.

31.3 Materials to be turned over to the Owner by the Construction Manager shall be delivered to a warehouse within a five (5) mile radius of the Project site.

ARTICLE 32 INTERIOR ENCLOSURE AND DUST ENCAPSULATION

32.1 Areas under construction or renovation shall be separated from occupied areas by suitable temporary enclosures furnished, erected and maintained by the Construction Manager. Temporary enclosures shall be dust and smoke tight and constructed of non-combustible materials to prohibit dirt and air borne dust from entering occupied spaces. Construction Manager to review with Consultant ways to provide ventilation for dust generated by demolition and fumes/vapors produced during installation of new materials.

32.2 Construction Manager is responsible for coordinating with the Owner's Project Manager any equipment to be turned off prior to erecting temporary enclosures.

32.3 Construction Manager shall protect all exhaust diffusers, equipment and electrical devices from the collection of dust. All areas shall be checked and cleaned prior to final acceptance of Work.

32.4 Dust and debris from Work operations shall be held to a minimum.

32.5 Construction Manager shall construct temporary dust partitions at locations and as detailed on drawings. Closures used for dust barricades shall be constructed of non-combustible materials, (metal studs and gypsum board or fire retardant plywood).

32.6 Construction Manager shall provide additional devices and materials as required to contain dust within Work area and protect personnel during course of Work.

32.7 Areas of minor renovation, consisting of the removal of doors and frames, blocking of openings, and other limited Work shall be separated by a dust partition of fire retarded polyethylene on studs.

32.8 Existing corridor doors may serve as dust barriers, except if removed for refinishing. In such cases, temporary wood doors must be substituted until original doors are replaced.

32.9 The Construction Manager may assume existing walls which extend full height of floor shall be deemed appropriate to contain air borne dust. Cover any voids or penetrations.

32.10 Doors or windows in the perimeter walls surrounding the project work area shall be sealed off with protective materials in a manner to prohibit dust from escaping the work area. These shall be left in place until all work creating dust is completed. Protective materials shall consist of fire retardant wood, metal studs, gypsum board or flame resistant plastic.

32.11 Entry passage to Work area shall be sealed off with zippered plastic opening, or other acceptable means which allows periodic entry and closure of barricade closure.

32.12 Install and maintain a "sticky mat" on the floor in locations where construction crews leave the construction area and prior to entering ANY existing space in the building.

32.13 Install and maintain a temporary floor covering in any and all elevators being utilized for this project.

ARTICLE 33 UKIT COMMUNICATIONS AND NETWORK SYSTEMS

33.1 The communications wiring is to be provided, installed and terminated by the Construction Manager using a certified and approved communications contractor. All work shall be done in compliance with the latest UKIT-Communications and Network Systems' Standards, and closely coordinated with UKIT-Communications and Network Systems.

ARTICLE 34 EMERGENCY VEHICLE ACCESS

34.1 Emergency Vehicle Access must be maintained during construction. The Construction Manager shall coordinate with the local Fire and Emergency Medical Services department(s) that would respond to an emergency during the initial start up of construction to ensure a complete understanding of their requirements.

ARTICLE 35 SMOKE DETECTORS / FIRE ALARM SYSTEMS- EXISTING AND/OR NEW FACILITIES

35.1 Construction Manager shall protect all smoke detectors in Work areas to prevent false alarms. The Construction Manager will be responsible for any false alarm caused by dust created in their Work areas or dust traveling to areas beyond the Work, past inadequate protection barriers.

If there is a need for an existing or newly installed fire alarm system or parts of that system to be serviced, turned off, or disconnected, prior approval must be obtained from the Owner's Project Manager and notification given to the Campus Dispatch Office. The Construction Manager must follow the procedure outlined for Utility Outages and any documented costs charged by the responding fire department due to a false alarm shall be paid by the Construction Manager. As soon as all Work is completed notification must be given to the Owner's Project Manager and to the Campus Dispatch Office prior to reactivation of the system. Prior to Final Payment to the Construction Manager, all protected smoke detectors will be uncovered and tested.

35.2.1 When any fire alarm, detection or suppression system is impaired, a temporary system shall be provided. Construction Manager shall provide daily reports indicating the Superintendent has walked through the project at the end of each work period, to satisfy himself there are no present conditions that may result in an accidental fire. Portable fire extinguishers shall be on site during this time. The Construction Manager is responsible for inspecting and testing any temporary systems on a monthly basis.

ARTICLE 36 SURVEYS, RECORDS, and REPORTS

36.1 General: Working from lines and levels established by property survey, and as shown in relation to the Work, the Construction Manager will establish and maintain bench marks and other dependable markers to set lines and levels for Work at each area of construction and elsewhere on site as needed to properly locate each element of the entire Project. The Construction Manager shall calculate and measure from the bench marks and dependable markers required dimensions as shown (within recognized tolerances if not otherwise indicated), and shall not scale drawings to determine dimensions. Construction Manager shall advise Sub-contractors performing Work of marked lines and levels provided for their use in layout of Work.

36.2 Survey Procedures: The Construction Manager shall verify layout information shown on drawings, as required for his own Work. As Work proceeds, surveyor shall check every major element for line, level, and plumb (as applicable), and maintain an accurate Surveyor's log or Record Book of such checks available for Construction Manager or Design Consultant's reference at reasonable times. Surveyor shall record deviations from required lines and levels, and advise Design Consultant or Construction Manager promptly upon detection of deviations exceeding indicated or recognized tolerances. The Construction Manager shall record deviations which are accepted (not corrected) on Record Drawings.

ARTICLE 37 SMOKING IS PROHIBITED

37.1 For areas located within Fayette County, Kentucky, the use of all tobacco products is prohibited on all property that is owned, operated, leased, occupied, or controlled by the University. "Property" for purposes of this paragraph includes buildings and structures, grounds, parking structures, enclosed bridges and walkways, sidewalks, parking lots, and vehicles, as well as personal vehicles in these areas. To view the Lexington campus boundaries: http://www.uky.edu/TobaccoFree/files/map.pdf.

37.2 For areas not located within Fayette County, Kentucky, smoking is prohibited in all owned, operated, leased, or controlled University buildings and structures, parking structures, enclosed bridges and walkways, and vehicles. Smoking is also prohibited outside buildings and structures within 20 feet of entrances, exits, air intakes, and windows, unless further restricted by division policy.

37.3 Construction Manager's employees violating this prohibition will be subject to dismissal from the Project.

37.4 For the full Administrative Regulation see University AR 6:5.
http://www.uky.edu/Regs/files/ar/ar6-5.pdf

ARTICLE 38 ALTERNATES

38.1 Alternate(s) will be accepted in the sequence of the Alternates listed on the Bid Form, and the lowest Bid Sum will be computed on the basis of the sum of the base Bid and any alternates accepted, within the budgeted amount.

38.2 Schedule of Alternates:

This list will be developed as approved by the UK Project Manager and Design Team at the completion of the Construction Documents / Phase 3 of design.

ARTICLE 39 FIELD CONSTRUCTED MOCK UPS

39.1 Exterior Finishes

39.1.1 After sample selection but prior to ordering exterior finish materials, Construction Manager shall accumulate enough material samples to erect sample wall panels to further verify selection made for color and textural characteristics, and to represent completed Work for qualities of appearance, materials and construction including sample masonry units (face and back-up wythes, plus accessories), window units, roofing finish, etc. to provide a complete representation of the exterior facade for approval by the Consultant; build mock-ups to comply with the following requirements:

39.1.2 Build mock-ups well in advance of the time the finish materials will be needed for inclusion in the Work.

39.1.3 Locate mock-ups at location as reviewed and approved by the Architect and University's Project Manager, generally within 10 feet of existing building, parallel to existing face of building, and exposed to sunlight during daylight hours. Mock-Up to be reviewed twice, one in direct sunlight and one in shade to confirm color characteristics of samples.

39.1.4 Mock-ups Size(s) for the following types shall be approximately 6' long by 4' high by full thickness.

Each type of exposed Work.

39.1.5 Protect mock-ups from the elements with weather resistant membrane.

39.1.6 Retain mock-ups during construction as a standard for judging completed Work. When directed by the University's Project Manager or by the Consultant, demolish mock-ups and remove from the site.

39.2 Interior Finishes

39.2.1 After sample selection but prior to ordering interior finish materials, Construction Manager shall accumulate enough material samples to erect sample to further verify selection made for color and textural characteristics, and to represent completed Work for qualities of appearance, materials and construction; include samples of interior finishes, including paint, wood stain, vinyl wallcovering, flooring and ceiling materials to provide a complete representation for approval by the Consultant; build mock-ups to comply with the following requirements:

39.2.2 Build mock-ups well in advance of the time the finish materials will be needed for inclusion in the Work. Mock-ups may be on newly installed wall surfaces.

39.2.3 Locate mock-ups with adequate illumination for observation under intended light levels.

39.2.4 Retain mock-ups during construction as a standard for judging completed Work. When directed by the University's Project Manager or by the Consultant, remove mock-ups from site or incorporate into the completed work.

ARTICLE 40 PROJECT COORDINATION VIA COMPUTER

40.1 The Construction Manager and Subcontractors are required to have an active email account to facilitate coordination of the project during construction and warranty.

40.2 To facilitate project construction coordination between the Consultant, the Construction Manager, Subcontractors, and the University of Kentucky as the Owner, UK Capital Project Management Division (CPMD) is hosting an Internet/ Web-based Project Management System (WPMS) to help improve project communication and collaboration. The Consultant shall participate in the use of the WPMS (UK E-Communication® or other system at the Owner's discretion) providing collaboration between Owner, the Consultant and selected contractors.

40.2.1 Owner shall provide the Construction Manager and Subcontractors with user accounts and appropriate training for the web-based project management tool.

40.2.2 Utilization of, and training in the use of, the WPMS will be arranged for and supervised by Owner.

40.2.3 Participation of Construction Manager is mandatory; others as determined by Owner. Participation of Subcontractors and/or Trade Contractors is not mandatory but will be offered at their discretion.

40.2.4 All participants are required to have access to the internet and the Microsoft Internet Explorer browser (version 5.0 or higher). A broadband connection to the internet (e.g. Cable modem, ISDN, DSL) is recommended, but not required.

40.2.5 The WPMS shall be utilized for the following functions, as a minimum: Posting Project Files, AE Amendments, Architect's Supplemental Information (ASI's), Closeouts, Consultant Invoices, Contracts, Defective Work in Place, Meeting Minutes, Payment Applications, Proposed Change Orders – Change Orders (PCO to CO's), Punch Lists, Reports (Contractor Daily Reports, Field Reports, Commissioning Reports), RFIs, SAP Equipment List, Schedules, and Submittals. The Document Library (Bid set Plans, Specifications and Addenda will be uploaded by Lynn Imaging.

40.2.6 Site camera monitors may be included at Owner's discretion.

40.2.7 Utilization of the WPMS shall be implemented by the Owner's representative.

40.2.8 Use of the system will provide consistent, real-time information for decision making. Additionally, all project data entered into the system will be archived to facilitate project record keeping. It is anticipated that proper use of the WPMS will improve efficiency of communications and reduce project related paperwork and clerical workload.

40.2.9 The Construction Manager and Consultant shall submit complete close-out and submittal logs in E-Communication, or WPMS, including description of all deliverables to be submitted by the construction manager or trade contractors during Phase 3, Construction Documents Phase.

ARTICLE 41 HOT WORK PERMITS

41.1 All work involving open flames or producing heat and or sparks in occupied buildings on the University of Kentucky campus will require the Construction Manager to obtain approval to perform "Hot Work" on site. This includes, but is not limited to: Brazing, Cutting, Grinding, Soldering, Thawing Pipe, Torch Applied Roofing, and Cad welding. A copy of the Hot Work Permit and the Hot Work Permit Procedure will be passed out at the Preconstruction Conference for the Construction Manager's use.

ARTICLE 42 INSURANCE

42.1 Employers' Liability Insurance. The Construction Manager shall acquire and maintain Employers' Liability insurance with at least $500,000/$500,000/$500,000 limits of liability for all employees who will be working at the Project site.

42.2.1 Commercial General Liability Insurance. If the work involved requires the use of helicopters, a separate aviation liability policy with limits of liability of $100,000,000 will be required. If cranes and rigging are involved, a separate inland marine policy with liability limits of $20,000,000 will be required.

42.2.1.1 The limits of liability shall not be less than $5,000,000 each occurrence combined single limits for bodily injury and property damage.

42.2.2 Comprehensive Automobile Liability Insurance. Policy limits shall not be less than $2,000,000 for combined single limits for bodily injury and property damage for each occurrence.

42.2.3 Excess or Umbrella Liability Insurance. This policy shall have a minimum of $5,000,000 combined single limits for bodily injury and property damage for each occurrence in excess of the applicable limits in the primary policies.

42.2.4 Workers' Compensation- Statutory Requirements (Kentucky)

ARTICLE 43 KEY ACCESS

43.1 If Construction Cores are NOT utilized, then one set of keys for access to the renovation project area will be provided to the Construction Manager/Vendor's Project Manager/Superintendent by the University's Project Manager. The Construction Manager/Vendor's holder of the key(s) assumes responsibility for the safekeeping of the key(s) and its use. When leaving the renovation area all doors must be secured.

43.2 All keys must be returned to the University's Project Manager upon completion of project work as one of the requirements for Final Payment. Failure to return the keys may require re-keying of all doors in the work area up to and including the entire building if master keys are issued. The cost of re-keying of the door(s) accessed by the key(s) will be subtracted from the remaining contract dollars including contract retainage.

43.3 All lost or stolen keys must be reported immediately to the University's Project Manager.

ARTICLE 44 CEILING CLEARANCE

44.1 Work above ceiling: All work above an area with lay-in ceiling must be coordinated and installed so there is a minimum of 4" between the top of the ceiling grid runners and bottom of the installation. Installation shall not obstruct equipment access space or equipment removal space. Also, conduit and pipe attached to the wall must be above the 4" minimum level.

44.2 Coordination Between Trades: Request and examine all drawings and specifications pertaining to the construction before installing above ceiling work. Cooperate with all other contractors in locating piping, ductwork, conduit, openings, chases, and equipment in order to avoid conflict with any other contractor's work. Give special attention to points where ducts or piping must cross other ducts and piping, and where ducts, piping and conduit must fur into the walls and columns. Make known to other trades intended positioning of materials and intended order of work. Determine intended position of work of other trades and intended order of installation.

ARTICLE 45 METAL ANCHORS

45.1 All anchoring devices utilized to secure materials to the building shall be metal. Plastic or plastic expansion components shall not be used. This shall include all fasteners for mechanical/electrical hangers.

ARTICLE 46 LOADING DOCK (NOT USED)

ARTICLE 47 CONSTRUCTION PATH (NOT USED)

ARTICLE 48 HOSPITAL PROJECT PROCEDURE (NOT USED)

ARTICLE 49 WORKING HOURS/ACCESS: FOR MEDICAL CENTER/HOSPITAL (NOT USED)

ARTICLE 50 SECURITY BADGES AND MEDICAL CENTER SECURITY (NOT USED)

ARTICLE 51 HOSPITAL CONSTRUCTION CERTIFICATION (NOT USED)

ARTICLE 52 APPEARANCE (NOT USED)

ARTICLE 53 HIPAA (The Health Insurance Portability and Accountably Act) (NOT USED)

ARTICLE 54 SAFETY & FIRE PROCEDURES (NOT USED)

ARTICLE 55 INTERIM LIFE SAFETY MEASURES (ILSM) (NOT USED)

ARTICLE 56 TREE PROTECTION STANDARDS
Contractor will adhere to all provisions outlined in 010000S02 Tree Protection Standards.

ARTICLE 57 CONTRACTOR/SUPERINTENDENT EXPERIENCE (NOT USED)

ARTICLE 58 COVID-19 POLICY

Any and all companies/organizations working on the University of Kentucky's campus shall have in place for the period of the contract a COVID-19 policy that is consistent with the University of Kentucky's current COVID-19 policy.

TABLE OF CONTENTS
GENERAL CONDITIONS OF THE CONTRACT
FOR CONSTRUCTION BY A CONSTRUCTION MANAGER AT RISK
University of Kentucky
Capital Construction Division

Contents

ARTICLE 1 - DEFINITIONS 3
ARTICLE 2 - CONSULTANT 5
ARTICLE 3 - CORRELATION AND INTENT OF CONTRACT DOCUMENTS 7
ARTICLE 4 - PRE-CONSTRUCTION CONFERENCE 8
ARTICLE 5 - SHOP DRAWINGS 8
ARTICLE 6 - LAYING OUT WORK 9
ARTICLE 7 - PLANS, DRAWINGS, SPECIFICATIONS AND RECORD DRAWINGS 10
ARTICLE 8 - TEMPORARY UTILITIES 10
ARTICLE 9 - MATERIALS, EQUIPMENT, APPLIANCES, AND EMPLOYEES 11
ARTICLE 10 - ROYALTIES AND PATENTS 12
ARTICLE 11 - SURVEYS, PERMITS, REGULATIONS, AND STANDARD CODES 12
ARTICLE 12 - PROTECTION OF WORK, PROPERTY, AND PUBLIC 14
ARTICLE 13 - BLASTING 15
ARTICLE 14 - CONSTRUCTION AND SAFETY DEVICES 15
ARTICLE 15 - HAZARDOUS MATERIALS 16
ARTICLE 16 - INSPECTION OF WORK 17
ARTICLE 17 - SUPERINTENDENT - SUPERVISION 18
ARTICLE 18 - CHANGES IN THE WORK 19
ARTICLE 19 - RULES AND MEASUREMENTS FOR EXCAVATION 21
ARTICLE 20 - CONCEALED CONDITIONS 22
ARTICLE 21 - DELAYS AND EXTENSION OF TIME 23
ARTICLE 22 - CORRECTION OF WORK BEFORE FINAL PAYMENT 26
ARTICLE 23 - CORRECTION OF WORK AFTER FINAL PAYMENT 27
ARTICLE 24 - TERMINATION OF CONTRACT FOR CONVENIENCE OF OWNER 27
ARTICLE 25- OWNER'S RIGHT TO STOP WORK 27
ARTICLE 26 -TERMINATION OF CONTRACT FOR DEFAULT ACTION OF CONSTRUCTION MANAGER 28
ARTICLE 27 - SUSPENSION OF WORK 29
ARTICLE 28 - TIME OF COMPLETION 30
ARTICLE 29 - LIQUIDATED DAMAGES 31
ARTICLE 30 - PAYMENT TO THE CONSTRUCTION MANAGER 32

ARTICLE 31 - AUDITS 35
ARTICLE 32 - PROGRESS & SCHEDULING 36
ARTICLE 33 - USE OF COMPLETED PORTIONS 37
ARTICLE 34 - INDEMNIFICATION 37
ARTICLE 35 - INSURANCE 38
ARTICLE 36 - PERFORMANCE AND PAYMENT BONDS 39
ARTICLE 37 - DAMAGED FACILITIES 39
ARTICLE 38 - CLAIMS & DISPUTE RESOLUTION 40
ARTICLE 39 - CLAIMS FOR DAMAGE 41
ARTICLE 40 - LIENS 41
ARTICLE 41 - ASSIGNMENT 41
ARTICLE 42 - SEPARATE CONTRACTS 42
ARTICLE 43 - CONSTRUCTION MANAGER/SUB-CONTRACTOR RELATIONSHIP 42
ARTICLE 44 - CASH ALLOWANCE 43
ARTICLE 45 - PROJECT SITE LIMITS 43
ARTICLE 46 - CLEAN UP 43
ARTICLE 47 - POINTS OF REFERENCE 44
ARTICLE 48 - SUBSTITUTION - MATERIALS AND EQUIPMENT 44
ARTICLE 49 - TEST AND INSPECTION 45
ARTICLE 50 - WARRANTY 45
ARTICLE 51 - PREVAILING WAGE LAW REQUIREMENTS (NO LONGER USED AS OF 1/9/17) 47
ARTICLE 52 - APPRENTICES 47
ARTICLE 53 - GOVERNING LAW 47
ARTICLE 54 - NONDISCRIMINATION IN EMPLOYMENT 47
ARTICLE 55 - AFFIRMATIVE ACTION; REPORTING REQUIREMENTS 47

GENERAL CONDITIONS OF THE CONTRACT FOR CONSTRUCTION BY A CONSTRUCTION MANAGER AT RISK
University of Kentucky
Capital Construction Division

These General Conditions are binding upon the Construction Manager and all Sub-contractors as each are subject to the provisions contained herein.

ARTICLE 1 - DEFINITIONS

1.1 Wherever used in these General Conditions or in other Contract Documents, the following terms have the meaning indicated which are applicable to both the singular and plural thereof:

1.1.1 ARCHITECT'S SUPPLEMENTAL INSTRUCTIONS (ASI) - The term "ASI" means a written order issued by the Consultant that clarifies or interprets the Contract Documents, that orders minor changes in the Work, that does not require an adjustment in either cost or time, and that does not require a Change Order.

1.1.2 BUSINESS DAY – The term "Business Day" means a Calendar Day that is not a Saturday, Sunday or legal holiday in Fayette County, Kentucky.

1.1.3 CALENDAR DAY - The term "Calendar Day" means a day of twenty-four hours measured from midnight to the next midnight

1.1.4 CHANGE ORDER - The term "Change Order" means a written order to the Construction Manager, signed by the Owner and issued after the execution of the Contract, directing a change in the Work or an adjustment in the Contract Amount or the Contract Time. A Change Order may be an agreed change by the Construction Manager and the Owner or it may be a unilateral change by the Owner.

1.1.5 CONSULTANT - The term "Consultant" means the person and/or entity, whether singular or plural, either Architect, Engineer or other Consultant, who is or are identified as such in the Contract Documents.

1.1.6 CONSTRUCTION MANAGER or CONSTRUCTION MANAGER AT RISK (CM) - The term "Construction Manager" or "Construction Manager at Risk" (CM) means the person or entity who will or has entered into a contract with the Owner that assumes the risk for construction of the Project as the construction manager, and who will provide consultation and collaboration regarding the construction during and after design of the Project. The CM shall execute and hold all construction Trade Contracts and Purchase Orders for the Project.

1.1.7 CONTRACT - The term "Contract" means the Contract between Owner and Construction Manager and consists of all Contract Documents as defined in Article 1.1.10 of these General Conditions.

1.1.8 CONTRACT AMOUNT - The term "Contract Amount" means the sum stated in the Agreement which represents the total amount payable by the Owner to the Construction Manager for the performance of the Work under the Contract Documents, plus or minus adjustments as provided for in the Contract Documents or by approved Change Orders.

1.1.9 CONTRACT DOCUMENTS - The "Contract Documents" include the Agreement of Contract between the Owner and the Construction Manager (the "Agreement"); the Request for Proposal; the General Conditions; the Special Conditions; the Construction Manager's Form of

Proposal; the Construction Manager's Bonds; the Specifications, Drawings and Addenda for the construction of the Project which are to be used for bidding of the bid pack/Trade Contracts; and any Change Orders issued after execution of this Contract. The Contract Documents shall not be construed to create a contractual relationship of any kind between the Owner and any Sub-contractor, or any person or entity other than the Construction Manager. Documents not included or expressly contemplated in this Article do not, and shall not, form any part of the Contract for Construction. Without limiting the generality of the foregoing, shop drawings and other submittals from the Construction Manager or its Sub-contractors and suppliers do not constitute a part of the Contract Documents. Except as otherwise provided, where these Contract Documents obligate the Construction Manager to certain responsibilities or require the Construction Manager to perform certain actions, the Construction Manager may require these same responsibilities and/or actions of one or more Sub-contractors. However, assignment of such responsibilities or actions to one or more Sub-contractors shall not be construed to relieve the Construction Manager of its obligation to the University under this contract.–

1.1.10 CONTRACT TIME - The term "Contract Time", unless otherwise provided, means the specified number of consecutive Calendar Days following the stipulated commencement of the Work as stated in the Work Order, plus or minus adjustments as provided for by approved Change Orders, within which the Construction Manager shall complete the Work required by the Contract and shall achieve certification of substantial and final completion.

1.1.11 KRS REFERENCES - Reference to “KRS” means the "Kentucky Revised Statutes" adopted by the Commonwealth of Kentucky, including all laws that may have been revised, amended, supplemented or new laws enacted.

1.1.12 OWNER - The term "Owner" means the University of Kentucky, a statutory body corporate existing pursuant to Sections 164.100 et seq. of the Kentucky Revised Statutes.

1.1.13 PROJECT - The term "Project" means the total construction of the Work performed under the Contract Documents, which may be the whole or a part, and which may include construction by the Owner or by separate contracts.

1.1.14 PROJECT MANAGER - The term "Project Manager", when used alone, means the Owner's representative responsible for administration and management of the Project. The Owner's Project Manager during construction shall be the designated University of Kentucky Capital Projects Management Project Manager that is in charge of the Project. The term “CM Project Manager” means the individual employed by the Construction Manager who is assigned to the Project to provide overall management during both the design and construction phases of the Project, and who has total responsibility for the successful completion of the Project

1.1.15 PROVIDE - The term "Provide," as used throughout the specifications, shall mean furnish, install and pay for.

1.1.16 SHOP DRAWINGS - The term "Shop Drawings" means drawings, diagrams, schedules, and other data specially prepared for the Work by the Construction Manager or any Sub-contractor, manufacturer, supplier, or distributor to illustrate some portion of the Work.

1.1.17 SUBSTANTIAL COMPLETION - The term "Substantial Completion" is the point at which, as certified in writing by the Owner, a project is at the level of completion, in strict compliance with the contract, where (a) necessary approval by public regulatory authorities (and by other authorities having jurisdiction or as identified in Article 11.2, as necessary) has been given; (b) the Owner has received all required warranties and documentation, and (c) the Owner may enjoy beneficial use or

occupancy and may use, operate, and maintain the project in all respects, for its intended purpose. Partial use or occupancy shall not necessarily result in the project being deemed substantially complete and shall not be evidence of Substantial Completion. In order for the Owner to enjoy beneficial use or occupancy and use, operate, and maintain the project in all respects, for its intended purpose, the stage or progress of the Work or a designated portion thereof shall be sufficiently complete, accessible, operable and usable, and all parts, systems and site Work shall be 100% complete, cleaned and available for the Owner's full use without interruption in accordance with the Contract Documents, including but not limited to the provisions of Article 28 of these General Conditions. The Work will not be considered acceptable for Substantial Completion review until all Project systems included in the Work are operational as designed and scheduled, all designated or required governmental inspections and certifications have been made and approvals provided to the Owner, designated instruction of the Owner's personnel in the operation of systems has been completed, and all final finishes within the Contract Documents are in place. In general, the only remaining Work shall be minor in nature so that the Owner and/or the Owner's tenants could occupy the Project on that date and the completion of the Work by the Construction Manager would not materially interfere or hamper the Owner's or the Owner's tenants' normal business operations. As a further condition of Substantial Completion acceptance, the Construction Manager shall certify in writing that all remaining Work, the same being solely of a "punch list" nature, will be completed within thirty (30) consecutive Calendar Days following the date of Substantial Completion.

1.1.17.1The parties agree that "substantial completion" as defined in Article No. 2 of the Agreement and Article 1 of the General Conditions, as extended by approved Change Order(s) pursuant to Article 18.1 of the General Conditions, shall be the "date of completion specified in the contract" for purposes of KRS. 45A.250(2).

1.1.18 SUB-CONTRACTOR - The term "Sub-contractor" means the person, company, corporation, joint venture or other legal entity with whom the Construction Manager has executed a Contract for a portion of the Work.

1.1.19 WORK - The term "Work" means the scope of construction and services required by the Contract Documents and all approved Change Orders, whether completed or partially completed, and includes all other labor, materials, equipment, and services provided or to be provided by the Construction Manager to perform and complete the Construction Manager's obligations under the Contract in an expeditious, orderly and workmanlike manner. The Work may constitute the whole or a part of the Project.

1.1.20 WORK ORDER - The term "Work Order" means a written notice by the Owner to the Construction Manager authorizing the Construction Manager to commence Work under the Contract and establishing the beginning date from which the time for Substantial and Final Completion shall be established.

1.1.21 UNIT PRICE - The term "Unit Price" means the amount per unit of measurement for materials or services as described in the bid documents.

ARTICLE 2 - CONSULTANT

2.1 The Consultant will be the Owner's representative during construction and until the Work is complete. The Consultant will advise and consult with the Owner. The Owner's instructions to the Construction Manager may be forwarded through the Consultant.

2.2 The Consultant will regularly, but no less frequently that monthly, visit the site to become familiar with the progress of the Work, the quality of the Work being provided and to determine if the

Work is proceeding in accordance with the Contract Documents. On the basis of these on-site inspections, the Consultant will inform the Owner of the progress of the Work, will advise the Owner of any defects and deficiencies observed in the Work and, when appropriate, will certify to the Owner that the Work in place equals or exceeds the amount requested by the Construction Manager on all applications for progress payments.

2.2.1 If applicable for the Work, the Consultant will verify to the Owner that the Construction Manager is performing erosion prevention and sediment control inspections as required by the Kentucky Division of Water Construction General Permit (KYR10) at least once every 7 days and shall include the findings in the site visit reports.

2.3 The Consultant will be the interpreter of the requirements of the drawings and specifications and any changes made to the drawings and specifications.

2.4 Claims, disputes, and other matters in question that arise relating to the execution or the progress of the Work shall be referred in writing to the Consultant by the Construction Manager. The Consultant will provide a response in accordance with and subject to the provisions of Article 38 of these General Conditions.

2.5 The Consultant will have the authority to reject Work which does not conform to the Contract Documents or to the required level of quality and performance.

2.6 The Consultant will review and approve, or take other appropriate action upon receipt of the Construction Manager's submittals such as Shop Drawings, product data, and samples. The review of submittals will be for general conformance with the design concept of the work, and for compliance with the information provided by the Contract Documents. Such review will not relieve the Construction Manager of any responsibility for errors or omissions in submittals, and will in no way constitute a waiver of or change to the requirements of the Contract Documents.

2.6.1 The Consultant’s review and response will be completed with reasonable promptness with a goal of ten (10) business days or less. The Consultant’s review of a specific item shall not indicate approval of an assembly of which the item is a component.

2.7 The Consultant will prepare Change Orders for the Owner to direct changes in the Work. Minor changes in the Work, not involving modifications to the contract cost or completion times and that are consistent with the purpose of Work, may be directed by the Consultant through Architect’s Supplemental Instructions (ASI).

2.8 When requested by the Construction Manager, the Consultant will conduct inspections to determine if the Project is at the level of completion required by and is in strict compliance with the Contract such that the Owner may enjoy beneficial use or occupancy and may use, operate, and maintain the project in all respects for its intended purpose, as further defined in the Contract. If the level of completion warrants, the Consultant will confirm that all necessary approvals by public regulatory authorities or other authorities having jurisdiction have been given, will confirm that the Owner has received all required warranties and documentation, will recommend dates for certification of Substantial Completion and Final Completion by the Owner, and will complete and submit the Notice of Termination of coverage under the KPDES General Permit for Storm Water Discharges Associated with Construction Activity.

2.9 The Construction Manager will accept direction for the Work on the Project only from the Owner's Project Manager or from the Consultant. Requests for information from the Construction Manager shall be directed to the Consultant.

ARTICLE 3 - CORRELATION AND INTENT OF CONTRACT DOCUMENTS

3.1 Execution of the Contract by the Construction Manager is a representation that the Construction Manager has or shall thoroughly and carefully examine the site of the of Work; shall timely investigate all conditions which can affect the Work or its cost, including but not limited to availability of labor, materials, supplies, water, electrical power, roads, access to the site, uncertainties of weather, water tables, the character of equipment and facilities needed to perform the Work, and local conditions under which the Work is to be performed; and further, that the Construction Manager shall insure that the documents issued for bidding by Sub-contractors reflect the results of this investigation and are adequate to complete the Work. It is the responsibility of the Construction Manager to be familiar with and comply with all Federal, State, and local laws, ordinances, and regulations which might affect those engaged in the Work, and to be familiar with the materials, equipment, or procedures to be used in the Work, or which in any other way could affect the completion of the Work. The Construction Manager shall carefully study and compare the Contract Documents with each other and with other information provided to the Construction Manager by the Consultant or the Owner pursuant to the Contract Documents and shall notify the Owner and the Consultant in writing of any errors, inconsistencies or omissions in the Contract Documents recognized by the Construction Manager. Any failure to properly familiarize itself with the proposed Work shall not relieve the Construction Manager from the responsibility for completing the Work in accordance with the Contract Documents.

3.2 The intent of the Contract Documents is to include all items necessary for the proper execution and completion of the Work by the Construction Manager. All labor or materials which are reasonably inferable from the Contract Documents and which are necessary to produce the desired result, even though not specifically mentioned in the Contract Documents, shall be included in the Work at no additional cost to the Owner.

3.3 In the event a question arises regarding the meaning or intent of the Contract Documents, the Construction Manager shall report it by preparing an RFI in eCommunication® to the Consultant. The Consultant shall furnish, with reasonable promptness and with a goal of three (3) business days and by whatever means as may be appropriate, additional instructions necessary for the proper execution of the Work. All such drawings and instructions shall be consistent with the Contract Documents, true developments thereof, and reasonably inferable therefrom. The Work shall be executed in conformity therewith and the Construction Manager shall do no Work without proper drawings and instructions. Items indicated on drawings as "N.I.C." or "Not In Contract" are shown for explanation purposes only and are not to be included in this Contract.

3.4 The Contract Documents are complementary, and what is required by one shall be binding as if required by all. In case of conflicts between the various documents, the order of precedence will be as follows: (1) Addenda, (2) Special Conditions, (3) General Conditions, (4) Technical provisions of the Specifications and (5) Drawings.

3.5 Any notice to the Construction Manager from the Owner regarding this Contract shall be in writing and delivery and service of such notice shall be considered complete when sent by certified mail to the Construction Manager at Construction Manager's last known address. Such notice may also, at the Owner's election, be hand-delivered to the Construction Manager or the Construction Manager’s authorized representative.

ARTICLE 4 - PRE-CONSTRUCTION CONFERENCE

4.1 Following the execution of the Contract, a pre-construction conference will be held. Representatives of the Capital Project Management Division, Consultant, Construction Manager, and all major Sub-contractors shall be present to discuss the time for construction, methods and plan of operation, authority of the Consultant, procedures for handling shop drawings, progress estimates and requests for payments, and other relevant issues. The time and location of this meeting will be the responsibility of the Construction Manager in consultation with the Consultant, Owner and other interested parties.

4.2 Environmental aspects of the project, including erosion prevention and sediment control (EPSC) and storm water management shall be discussed during this conference. The Group shall discuss the Storm Water Pollution Prevention Plan (SWPPP) to ensure that all parties understand the requirements. During this meeting the responsibility for reading the rain gage on a daily basis will be established. The Construction Manager will identify the initial measures to be installed prior to land disturbing activities beginning. Any modifications to the SWPPP due to constructability issues should be discussed at this conference.

ARTICLE 5 - SHOP DRAWINGS

5.1 The Construction Manager shall submit a shop drawing and product sample submittal schedule to the Consultant establishing dates for the submission of Shop Drawings and product samples prior to the submittal of the Construction Manager's first application for payment for construction phase services. The schedule shall have been coordinated with all Sub-contractors and material suppliers as well as the Construction Manager’s construction schedule and shall allow for adequate and reasonable time for review of the samples and submittals by the Consultant. The Construction Manager shall be responsible for compliance with the submittal schedule and shall insure that the submittal schedule is maintained in order to accurately reflect the status of processing all required submittals.

5.2 The Construction Manager shall review product samples and Shop Drawings for compliance with the requirements of the Contract Documents, and shall submit them to the Consultant in accordance with submittal procedure and schedule established. The Construction Manager's review and submittal to the Consultant of any Shop Drawing or sample shall constitute a representation to the Owner and Consultant that a) the Construction Manager has determined and verified all quantities, dimensions, field construction criteria, materials, catalog numbers, and similar data, or assumes full responsibility for doing so, and that b) each Shop Drawing or sample has been reviewed or coordinated with the requirements of the Work and the Contract Documents. Shop Drawings and submittal requirements shall not be deemed satisfied until approvable documents are received by the Consultant. Incorrect or incomplete submittals will be returned to the Construction Manager without action. No claim for additional time or extension of the contract will be considered if such claim is the result of failure by the Construction Manager to provide correct, accurate, complete and approvable submittals.

5.3 The Consultant will review submittals with reasonable promptness, and take appropriate action or return submittals to the Construction Manager for corrections as may be required. The Construction Manager shall make any corrections required by the Consultant for compliance with the Contract and shall return the required number of corrected copies of Shop Drawings and resubmit new samples until approved. The Construction Manager shall direct specific attention, in writing, or on resubmitted Shop Drawings, to revisions other than the corrections called for by the Consultant on previous submissions.

5.4 Where a Shop Drawing or sample submission is required by the specifications, no related Work shall be commenced until the submission has been accepted in writing by the Consultant. The review and acceptance shall be only for conformance with the design concept of the Project and for compliance with the information given in the Contract Documents. The acceptance of a separate item will not indicate acceptance of the assembly in which the item functions. A copy of each accepted Shop Drawing and product sample shall be kept in good order by the Construction Manager at the site and shall be made available to the Consultant on request.

5.5 The Consultant's acceptance of Shop Drawings or samples shall not relieve the Construction Manager from the responsibility for any deviations from the requirements of the Contract Documents unless the Construction Manager has in writing called the Consultant's attention to such deviation at the time of submission and the Consultant has given written approval to the specific deviation. Any acceptance by the Consultant does not relieve the Construction Manager from responsibility for errors or omissions in the Shop Drawings.

ARTICLE 6 - LAYING OUT WORK

6.1 The Construction Manager will secure all data at the site of the building such as grades of lot, convenience of receiving and sorting material, location of public services, and other information which will have a bearing proposals or on the execution of the Work and shall address these issues in the preparation of scopes of work for the Subcontract bid packages. No allowance shall be made for failure of the Construction Manager to obtain such site information prior to submitting their proposal or to include such information in the Subcontract bid packages, and no adjustment to the Construction Manager’s Contract amount or stipulated time for completion shall be allowed when due to failure by the Construction Manager to do so.

6.2 The Construction Manager shall be responsible for all lines, levels and measurements of all Work executed under the Contract. The Construction Manager shall verify all dimensions before laying out the Work and will be held responsible for any error resulting from failure to do so. Working from lines and levels established by the property survey or by other Contract Documents, and as shown in relation to the Work, the Construction Manager will establish and maintain bench marks and other dependable markers to set lines and levels for Work at each area of construction and elsewhere on the site as needed to properly locate each element of the entire Project. The Construction Manager shall calculate and measure from the bench marks and dependable markers required dimensions as shown (within recognized tolerances if not otherwise indicated), and shall not scale drawings to determine dimensions. The Construction Manager shall advise Sub-contractors and trades persons performing Work of marked lines and levels provided for their use in layout work. The Construction Manager shall verify layout information shown on drawings as required for the Work.

6.3 The Construction Manager shall be responsible for coordination of the installation of all elements of the Work, including preparation of coordination drawings if required by the Contract Documents or deemed necessary by the Construction Manager for performance of the Work.

6.4 If any encroachments are made by the Construction Manager or any Sub-contractor on any adjacent property, the Construction Manager shall, at the Construction Manager’s expense, and within thirty (30) Calendar Days after written notice from the Owner or the Consultant, correct any encroachments and obtain approval from the owner of such adjacent property for any encroachments that cannot be feasibly corrected. The Construction Manager shall not be entitled to any adjustment to the Contract Amount or the Contract Time as a result of any such encroachment or the correction thereof.

ARTICLE 7 - PLANS, DRAWINGS, SPECIFICATIONS AND RECORD DRAWINGS

7.1 Unless otherwise provided in the Contract Documents, the Owner will furnish the Construction Manager free of charge one electronic or reproducible copy of the Drawings and Specifications for execution of the Work. The Construction Manager shall pay for the cost of duplication of all sets required over and above this amount.

7.2 The cost of additional plans, specifications and official contract documents for use by Sub-contractors for bidding and for construction shall be borne by the Construction Manager or by the Sub-contractors. Arrangements for orders and payment for plans, specifications and other contract documents must be made with Lynn Imaging, Lexington, Kentucky (http://www.ukplanroom.com) or by phone at 1.800.888.0693 or 859.255.1021) before a set of documents will be issued.

7.3 The Construction Manager shall keep one copy of all Contract Documents, including Drawings, Specifications and Shop Drawings on the site and in good order. A qualified representative of the Construction Manager shall record on these documents, from day to day as Work progresses, all changes and deviations from the Contract Documents. Prior to Substantial Completion, the Construction Manager shall complete and turn over to the Consultant the As-Built drawings, with a digital copy (in PDF format) submitted to the Owner simultaneously. The As-Built drawings shall consist of a set of drawings which indicate all field changes that were made to adapt to field conditions, changes resulting from Change Orders and all concealed and buried installations of piping, conduit and utility services. All buried and concealed items, both inside and outside the facility, shall be accurately located on the As-Built drawings as to depth and in relationship to not less than two permanent features such as interior or exterior wall faces. The As-Built drawings shall be clean and all changes, corrections and dimensions shall be given in a neat and legible manner in a contrasting color. For any changes or corrections in the Work which are made subsequent to the Substantial Completion Inspection, revisions shall be made to the As-Built drawings and submitted to the Consultant prior to final payment. Approval of the final payment request shall be contingent upon compliance with these provisions.

7.4 All drawings, specifications and copies thereof, furnished by the Consultant to the Owner, are the property of the University of Kentucky. They shall not be used by the Consultant, Construction Manager, or any Sub-contractor or Supplier on any other Project.

ARTICLE 8 - TEMPORARY UTILITIES

8.1 The Construction Manager shall provide and pay for, unless modified in the Special Conditions, all temporary conveniences including, but not limited to, wiring, lighting, power and electrical outlets, heat, water, and sanitary facilities required for construction. In the event the Owner elects to make available, at no cost to the Construction Manager, the electric power required for construction activities, the electric power supplied shall not be utilized as a means to provide temporary heat or for welding.

8.2 The Construction Manager is responsible for paying all utility costs, whether the costs are from an outside utility company or from the University, for utility services used in the course of completing the Work. The Construction Manager shall provide temporary heating, ventilation, telephones, water, electricity, portable gas, lighting for the Work, safety lighting, security lighting, and trash removal/dumpster service for both Construction Manager and Sub-contractor use during the Project. Work and safety lighting shall be provided continuously during working hours. Security lighting shall be provided at all hours of darkness.

ARTICLE 9 - MATERIALS, EQUIPMENT, APPLIANCES, AND EMPLOYEES

9.1 Unless otherwise provided in the Contract Documents, the Construction Manager shall provide and pay for all materials, labor and personnel, tools, equipment, construction equipment and machinery, utilities, supplies, appliances, transportation, taxes, temporary facilities, licenses, permits and all other facilities and incidentals necessary for the furnishing, performance, testing, start-up and the proper execution and completion of the Work safely, without damage to persons and property, and in compliance with all applicable law. The Construction Manager shall furnish, erect, maintain, and remove at the completion of the Contract, all temporary installations as may be required during the construction period.

9.2 Immediately following the execution of each of the Trade Contracts, the Construction Manager shall determine the source of supply for all materials required under that Trade Contract and the length of time required for their delivery, and shall assure that orders are placed for such materials in sufficient time to assure delivery to the site so that such materials are available to be incorporated into the Work when needed to comply with the schedule of Work.

9.3 The Construction Manager shall immediately notify the Consultant in writing of any known problems with the procurement, fabrication or ordering of any materials. Unless changes are approved in writing by the Consultant, the Construction Manager will not be excused for delays in securing materials specified.

9.4 The Construction Manager or Sub-contractors shall not place purchase orders or issue contracts for materials, supplies, equipment and services necessary to complete this Project using the name of the University of Kentucky. All orders placed by the Construction Manager that are related to this Project must use the name of the Construction Manager or Sub-contractor placing the order. The use of the University of Kentucky's name for ordering purposes is strictly prohibited. Payment for all goods and services required for the completion of the Work is the sole responsibility of the Construction Manager. Any invoices received at the University that are related to this Project will be immediately forwarded to the Construction Manager. Copies of these invoices will be made and placed in the Construction Manager's file and proof must be provided that these invoices have been paid in full prior to the processing of the next scheduled application for progress payment.

9.5 The route for delivery of all materials to the Project shall be coordinated with the Owner's Project Manager.

9.6 The Construction Manager shall be responsible for the proper and adequate storage of materials and equipment. Unless otherwise provided in the Contract Documents, all materials shall be of good quality and new. Workmanship and materials supplied and incorporated into this Work shall be of first quality. The Construction Manager, if required, shall furnish satisfactory evidence as to the kind and quality of materials.

9.7 The Construction Manager shall at all times enforce strict discipline and good order among all employees and Sub-contractors. The conduct of all individuals performing Work or operations related to the Work is the responsibility of the Construction Manager. The consumption of alcohol or drugs on the job by any workers is strictly prohibited. Any individual apprehended under the influence of alcohol or drugs on the premises at any time shall be subject to automatic removal from the Project by the Construction Manager, the Consultant or the Owner. Improper conduct of any kind will not be permitted and may result in the offending individual, Sub-contractor or Construction Manager being barred from the Owner's premises. The Construction Manager shall not permit the employment on the Project of any person unfit or not skilled in the Work assigned.

ARTICLE 10 - ROYALTIES AND PATENTS

10.1 The Construction Manager shall pay all royalties and license fees. If a particular process, product or device is specified in the Contract Documents and it is known to be subject to patent rights or copyrights, the existence of such rights shall be disclosed in the Contract Documents and the Construction Manager is responsible for payment of all associated royalties. The Construction Manager hereby agrees to indemnify, defend and hold the Owner, and any subsidiary, parent, or affiliates of the Owner, or other persons or entities designated by the Owner, and their respective directors, officers, agents, employees and designees (collectively, the "Indemnities") harmless from all losses, claims, liabilities, injuries, damages and expenses, including attorneys' fees and legal expenses, that the Indemnities may incur as a result of the Construction Manager's failure to strictly comply with its obligations under this Paragraph 10.1.

ARTICLE 11 - SURVEYS, PERMITS, REGULATIONS, AND STANDARD CODES

11.1 The Owner will furnish only such surveys that are specifically required by the Contract Documents. Approvals, assessments, and easements for permanent structures or permanent changes in existing structures shall be secured and paid for by the Owner, unless otherwise specified. All required utility tap-on fees shall be secured and paid for by the Construction Manager, or included in a Trade Contract, including the Lexington-Fayette Urban County Government (LFUCG) sewer tap-on fee**.** All construction permits, where required by local ordinances, except excavation permit, shall be obtained by the Construction Manager, but no fee shall be charged to or paid by the Construction Manager as the Owner is exempt from such charges. A Contractor's license fee for doing business in the locale, if applicable, shall be paid for by the Construction Manager.

11.2 All branches of Work shown on the plans and specifications shall be executed in strict compliance with all state and federal regulations and codes, with all national codes, and with the requirements of both ADA and JCAHO when applicable.

11.3 The Contractor, on projects disturbing 1 acre or more, or projects less than 1 acre that are part of a large common development plan, including grading, clearing, excavation, material laydown or other earth moving activities, shall assure full compliance with the requirements of the KYR10 and shall:

11.3.1 File a Notice of Intent (KPDES FORM eNOI-SWCA) with the Kentucky Division of Water and copy the UKCPM Project Manager and Water Quality Manager prior to the start of any excavation, grading or site development work.

11.3.2 The permittee (contractor) shall develop a Stormwater Pollution Prevention Plan (SWPPP) based on the Erosion Prevention and Sediment Control Plan (EPSC) as a minimum design standard. Ensure all requirements of KYR10 are fully addressed in the SWPPP. **Once the SWPPP is written, forward a copy to the Capital Projects Project Manager and to the Water Quality Manager for approval. <u>Work cannot begin until SWPPP is approved and permit coverage obtained.</u>**

11.3.3 Install BMP's such as, basins, traps, drainage, and sediment barriers before beginning land disturbing activities, including the construction entrance/exit. Once prevention measures have been installed, grading can commence. In the event a new construction entrance is added to the site, this new entrance must be built according to the EPSC design details with a wheel wash, a water supply and a sediment catch basin for washed wheel sediment.

11.3.4 Maintain all measures in working condition. Perform maintenance activities identified during inspections prior to the next rain event. Remove sediment from BMPs when 1/3 the storage volume has been filled.

11.3.5 Stabilize disturbed areas within 14 days of inactivity or reaching final grade on any portion of the site according to permit requirements.

11.3.6 Inspect the site every 7 calendar days and after each rainfall of ½"or more. Document site conditions, rainfall, maintenance activities needed and performed, stabilization needed and performed, and where new measures are needed. Discuss deficiencies with UK Project Manager and Water Quality Manager and note on the SWPPP Inspection Sheets.

Per the KPDES Permit, Section 2.1.7. "Inspections – Permittee Conducted". "Inspections shall be performed by personnel knowledgeable and skilled in assessing conditions at the construction site that could impact storm water quality and assessing the effectiveness of erosion prevention measures, sediment control measures, and other site management practices chosen to control the quality of the storm water discharges. Inspectors shall have training in storm water construction management such as Kentucky Erosion Prevention & Sediment Control (KEPSC), Certified Professional in Stormwater Quality (CPSWQ), Certified Erosion, Sediment and Stormwater Inspector (CESSWI), or other similar training."

Inspections shall include a tour of the total site and verification that all BMPs are performing as constructed. Inspector shall certify that all observations are correct as stated and sign and date the inspection form.

11.3.7 Keep Permit, SWPPP, weekly/rain event inspections sheets in binder in construction trailer. Any BMP change/alteration from SWPPP and EPSC plan must be noted on the EPSC and SWPPP.

11.3.8 **No soil and sediment shall leave the construction site. BMPs shall be repaired immediately if failure has occurred. No Mud shall be permitted on any street. All entrances/exits shall have a means by which to wash wheels. If an entrance/exit does not have a wheel wash, that exit shall not be used in muddy conditions. If for any reason mud is tracked offsite, the area must be cleaned in such a way as to prevent sediment from entering the storm sewer system. The use of tractor brooms solely will not be permitted.**

11.3.9 When it is necessary to dewater an excavation, proper BMPs must be implemented. Dewatering filter bags must be sized and used according to manufacturer's requirements and Standard Operating Procedures for Dewatering Bags.

11.3.10 UK (the MS4) routinely inspects sites for compliance with the EPSC/SWPPP. Any deficiencies noted become record for the Kentucky Division of Water and shall be remedied/installed as soon as site conditions are favorable but no more than 7 days from the inspection date.

11.3.11 At the conclusion of the project and all bare areas, slopes and ditches are 70% vegetated with the permanent ground cover, the contactor shall notify the UK Project Manager and Water Quality Manager and request a final site inspection prior to filing a "Notice of Termination (NOT) with the state. This inspection verifies that Construction BMPs can be removed, and Post-Construction BMPs are in place and functioning.

11.3.12 **Failure of the site contractor (permitee of the KPDES Permit) to timely comply with requirements of KPDES, the Construction Manager shall inform the site contractor that a third party contractor shall be retained to remediate all BMP deficiencies immediately, and all third party costs shall be passed to the permitee of the KPDES Permit. Any fines or other costs**

resulting from failure to comply, levied against the Owner will be assessed against the Construction Manager's or General Constructor's funds.

11.3.13 Refer to 334000S01 STORM DRAINAGE UTILITIES – Information for Consultants & Contractors.

11.3.14 Reference to standards, codes, specifications, and regulations refer to the latest edition of printing in effect at the date of issue shown in the Contract Documents unless another date is implied by the suffix number of the standard.

11.4 Reference to standards, codes, specifications, and regulations refer to the latest edition of printing in effect at the date of issue shown in the Contract Documents unless another date is implied by the suffix number of the standard

11.5 The Construction Manager shall furnish a final occupancy permit from the proper agency or agencies as required.

11.6 The Construction Manager shall, by provision within each applicable subcontract or by inclusion in the lump sum fee proposed to the Owner, insure the payment of all sales, consumer, use and similar taxes for materials, equipment and supplies incorporated into the Work, by unless otherwise specified in the bid documents.

ARTICLE 12 - PROTECTION OF WORK, PROPERTY, AND PUBLIC

12.1 The Construction Manager shall continuously maintain adequate protection of all Work from damage and shall protect the Owner's property from injury or loss arising in connection with this Contract. Except as otherwise covered by Builder's Risk insurance, the Construction Manager shall pay for any damage, injury, or loss, except such as may be directly due to errors in the Contract Documents or caused by agents or employees of the Owner. The Construction Manager shall adequately protect adjacent property as provided by law and the Contract Documents.

12.2 In an emergency affecting the safety of life, or of the Work, or of adjoining property, the Construction Manager, without special instruction or authorization from the Consultant or the Owner, is obligated to act to prevent such threatened damage, loss or injury.

12.3 The Construction Manager shall maintain fire protection as required by the Kentucky Building Code. Access to the Project site and surrounding buildings for local fire truck access during construction must be maintained. The Construction Manager shall maintain construction to allow access to new, existing or temporarily relocated standpipes, fire hydrant connections and fire alarm communication panels pursuant to Section 3018.8 of the Kentucky Building Code. If the Construction Manager utilizes the Owner's fire protection equipment, the Construction Manager shall replace any such materials lost, consumed or misplaced during the Contract period. The Construction Manager is responsible for any false alarms caused by dust created in the Work area or dust traveling to areas beyond the Work area due to inadequate dust protection barriers. Should there be a need for any existing or newly installed fire alarm system, or parts of a system that requires service, to be removed from service or disconnected, prior approval must be obtained from the Owner and the Construction Manager shall immediately provide alternate protection such as a fire watch until such systems are returned to full normal operations. When work or service is completed on a disabled fire alarm system, the Owner shall be immediately notified so the system can be placed in service.

12.4 The Construction Manager and Sub-contractors are responsible for the security of their own materials, tools and equipment at the Project site.

12.5 The Construction Manager shall provide to the Owner's Project Manager a key to Construction Manager's field office or job trailer.

ARTICLE 13 - BLASTING

13.1 Blasting is not allowed unless permission is granted in the Special Conditions. Should blasting be allowed by the Special Conditions, it shall be completed in accordance with all laws, regulations, ordinances and instructions contained in the Special Conditions.

ARTICLE 14 - CONSTRUCTION AND SAFETY DEVICES

14.1 The Construction Manager shall provide safety controls for protection of the life and health of employees and visitors. The Construction Manager will utilize precautionary methods for the prevention of damage to property, materials, supplies, and equipment, and for avoidance of work interruptions in the performance of this Contract. In order to provide such safety control, the Construction Manager shall comply with all pertinent provisions of the Kentucky Fire Prevention Code, Kentucky Building Code, Kentucky Labor Cabinet's Division of Occupational Safety and Health Program Construction Standards and Federal Occupational Safety and Health (Construction) Standards that are in effect at the time the Contract is entered into and during the period in which the Contract is to be performed.

14.2 The Construction Manager shall provide a written safety program which includes all pertinent written specialty standards such as, but not limited to, Control of Hazardous Energy Sources (Lockout/Tagout), Hazard Communications Program, First Aid, Blood Borne Pathogen Program, Respirator Use Program and Hearing Conservation Program. The Construction Manager shall require all Sub-contractors to have an effective written safety program or be required to follow the Construction Manager's written safety program.

14.3 The Construction Manager shall maintain an accurate record of and shall report to Kentucky Labor Cabinet's Division of Occupational Safety and Health in the manner and on the forms prescribed by that Division, exposure data and all accidents resulting in death, traumatic injury, or occupational disease. The Construction Manager shall maintain an accurate record of and shall report to the Owner's Project Manager, any damage to property, materials, supplies, or equipment incident to Work under this Contract.

14.4 The Kentucky Labor Cabinet's Division of Occupational Safety and Health may notify the Construction Manager of any noncompliance with the foregoing provisions. The Construction Manager shall, upon receipt of such notice, immediately correct the cited conditions. Notice delivered to the Construction Manager or the Construction Manager's representative at the site of the Work shall be deemed sufficient for this purpose. If the Construction Manager fails or refuses to comply promptly, the Owner may issue an order stopping all or part of the Work until satisfactory corrective action has been taken. Failure or refusal to comply with the order will be grounds for reducing or stopping all payments due under the Contract to the Construction Manager. No part of the construction time lost due to any such stop order shall be cause for, or the subject of a claim for, extension of time or for additional costs or damages by the Construction Manager.

14.5 The Construction Manager or any Sub-contractor shall immediately contact the University of Kentucky's Department of Occupational Health and Safety through the Owner’s Project Manager

should they be selected for an inspection by the Kentucky Occupational Safety and Health Compliance Division.

14.6 Compliance with the provisions of the foregoing sections by Sub-contractors shall be the responsibility of the Construction Manager.

14.7 Nothing in the provisions of this Article 14 shall prohibit the U.S. Department of Labor or the Kentucky Department of Labor Division of Occupational Safety and Health from enforcing pertinent occupational safety and health standards as authorized under Federal or State Occupational Safety and Health Standards.

14.8 The Construction Manager shall take all necessary precautions for the safety of employees on the Work, and shall comply with all applicable provisions of federal, state, and municipal safety laws and building codes to prevent accidents or injury to persons on, about, or adjacent to the premises where the Work is being performed. If the Construction Manager or any Sub-contractor has questions related to the health or safety required by their written safety program, they should contact the Kentucky Labor Cabinet Occupational Safety and Health Program Division of Education and Training. The Construction Manager shall designate a responsible member of the on-site work force as the safety officer and shall report to the Consultant and to the Owner the name of the person selected. The duties of the safety officer include the enforcement of safety regulations.

ARTICLE 15 - HAZARDOUS MATERIALS

15.1 If the Construction Manager encounters material reasonably believed to be or suspected to be asbestos containing material, lead, polychlorinated biphenyls (PCBs), fluorescent light bulbs and ballasts, mercury or other hazardous material, the following procedures must be followed:

15.1.1 The Construction Manager shall immediately stop work in the affected area and notify the Owner's Project Manager. The Owner’s Project Manager will contact the Owner's Environmental Health and Safety unit to arrange for collection of samples, review of existing data, or other testing necessary to confirm the presence of hazardous materials. The Owner’s Project Manager will notify the Construction Manager in writing of the results. Until that notification is received, the Work must not continue in the affected area.

15.1.2 If the material is confirmed to be asbestos, lead, polychlorinated biphenyls (PCBs), fluorescent light bulbs and ballasts, mercury or other hazardous material, the Owner will take appropriate action to remove the material before the Construction Manager can continue Work in the affected area.

15.1.3 The Construction Manager shall not be required to perform any Work related to asbestos, lead, polychlorinated biphenyls, or other hazardous material. The Construction Manager is advised that certain classes of building materials (thermal system insulation, sprayed or troweled surfacing materials, and resilient flooring) installed before 1981 are required by law to be treated as asbestos containing until proven otherwise. These presumed asbestos containing materials must not be disturbed without confirmation from the Owner that asbestos is not present.

15.2 The Owner, the Construction Manager, and Sub-contractors will be under the requirements of the OSHA Hazard Communication Standard (29) CFR 1910.1200. The Construction Manager and Sub-contractors must provide their own written Hazard Communication Program. The Hazard Communication Standard must include: (1) A list of the hazardous chemicals to which the Construction Manager's employees may be exposed; (2) Statement of the measures that Construction Manager's employees and Sub-contractors may take to lessen the possibility of exposure to the

hazardous materials; (3) The location of and access to the Material Safety Data Sheets (MSDS's) related to the hazardous chemicals located in the Work area; (4) Procedures that the Construction Manager's employees and Sub-contractors are to follow if they are exposed to hazardous chemicals above the Permissible Exposure Limit (PEL). Material Safety Data Sheets may be reviewed upon request by the Construction Manager or any Sub-contractor as they pertain to the Work areas of the Project. Photocopies of the MSDS's may be made by Construction Manager at its expense.

15.3 The Construction Manager and Sub-contractors shall provide the Owner with a list of any hazardous materials that will be used on the job site. The Construction Manager and Sub-contractors shall provide the Owner with copies of Material Data Sheets for all such materials to be used.

15.4 It is the policy of the Owner that PCB containing equipment will be treated by the Construction Manager and the Owner in a manner that conforms to the intent of all applicable laws and regulations (primarily 40 CFR Part 761). The following procedures shall be followed by the Construction Manager and Sub-contractors while present on the Owner's Project or other property: (1) Only authorized, trained personnel may inspect, repair, or maintain PCB transformers; and (2) No combustible materials may be stored within a PCB transformer room or within five meters of a PCB transformer. Such materials include, but are not limited to, paints, solvents, plastic, paper, and wood. The Construction Manager shall not use rooms containing PCB transformers for storage rooms, staging areas, job site offices or break rooms. Violation of this policy may be grounds for dismissal of the offending Construction Manager and/or Sub-contractor from the Project. All PCB transformers at the University of Kentucky are identified by a PCB label as defined in federal regulations. If the Construction Manager should have a question as to the location of a PCB transformer, it should contact the Owner's Project Manager.

15.5 The Construction Manager shall ensure that NO asbestos-containing materials (including but not limited to: drywall, joint compound, roof mastic or floor tile adhesive) will be install on any University project without prior written approval of the University's Environmental Health and Safety Division. Additionally, the Construction Manager shall submit MSDS sheets and have prior approval before installing any materials that contains hazardous substances or could pose an environmental hazard. If any environmental hazardous materials are installed without written approval of the University, the Construction Manager will be responsible for all material replacement cost, all removal and all other associated damages. Any materials removed shall be taken out in accordance with all applicable federal, state and local regulations.

ARTICLE 16 - INSPECTION OF WORK

16.1 Inspections, tests, measurements or other acts of the Consultant are for the sole purpose of assisting the Consultant in determining if the Work, materials, rate of progress, and quantities comply with the Contract Documents. These acts or functions shall not relieve the Construction Manager from performing the Work in full compliance with the Contract Documents, nor relieve the Construction Manager from any of the responsibility for the Work assigned to it by the Contract Documents. No inspection by the Consultant shall constitute or imply acceptance. Approval of material is general and shall not constitute waiver of the Owner's right to demand full compliance with Contract Documents.

16.2 All Work completed and all materials incorporated for the Project are subject to inspection by the Owner, the Consultant or their representatives to determine conformance with the Contract Documents. The Owner, Consultant and their representatives shall at all times have access to the Work whenever it is in preparation or progress. The Construction Manager shall provide, at no additional cost to the Owner, any facilities necessary for sufficient and safe access to the Work to complete any inspections required. The Consultant shall be given timely notification in order to

arrange for the proper inspections to be performed on any Work outside of the normal working day or week. If the Consultant provides the Construction Manager with a list of construction milestones that require inspection, the Construction Manager shall provide the Consultant with at least five (5) Business Days written notice prior to the commencement of Work with respect to such milestone in order to permit the Consultant time to coordinate an inspection of the commencement of the applicable Work.

16.2.1 Normal Work hours are defined as a period between 7:00 a.m. and 5:00 p.m. Monday through Friday. The Construction Manager shall notify the Owner's Project Manager at least one working day prior to performance of any Work for permission to do any Work during non-normal Work hours.

16.3 If the Specifications, the Consultant's instructions, laws, ordinances, or any public authority require any Work to be specially inspected, tested or approved, the Construction Manager shall give the Consultant timely notice of the readiness of the Work for inspection. The Consultant shall promptly make all required inspections. If any portion of the Work should be covered contrary to the request of the Consultant, or to the requirements specifically expressed in the Contract Documents, the Work must be uncovered for inspection and observation and shall be uncovered and replaced at the Construction Manager's expense.

16.4 If any other portion of the Work has been covered, which the Consultant has not specifically requested to observe prior to being covered, the Consultant, with the Owner's approval, may request to see such Work and it shall be uncovered by the Construction Manager. If such Work is found to be in accordance with the Contract Documents, the cost of uncovering and replacement shall be charged to the Owner by appropriate Change Order. If such uncovered Work is not in accordance with the Contract Documents, the Construction Manager shall pay all costs for uncovering and replacement of such Work.

ARTICLE 17 - SUPERINTENDENT - SUPERVISION

17.1 The Construction Manager shall completely and thoroughly direct and superintend the Work in accordance with the highest standard of care for the Construction Manager's profession so as to ensure expeditious, workmanlike performance in accordance with requirements of the Contract Documents. Except as otherwise dictated by specific requirements of the Contract Documents, the Construction Manager shall be solely responsible for and have control over all construction means, methods, techniques, sequences and procedures. The Construction Manager shall be responsible for the acts and omissions of all Sub-contractors and persons directly or indirectly employed by the Construction Manager in the completion of the Work. The Construction Manager shall be responsible for coordinating and scheduling all portions of the Work unless the Contract Documents give other specific instructions. The Construction Manager shall not be relieved of obligations to perform the Work in accordance with the Contract Documents either by the activities of the Consultant in the administration of the Contract, or by tests, inspections or approvals required or performed by persons other than the Construction Manager.

17.2 The Construction Manager shall have a competent superintendent on the Project site at all times during the process of the Work. The superintendent shall have authority to act on the Construction Manager's behalf with regard to all aspects of performance of this Contract. The superintendent shall have such assistants with individual specialized competencies as may be necessary to fully understand and oversee all aspects of the Work. The Construction Manager shall also provide administrative, supervisory and coordinating personnel required to fully perform the Work and for interfacing the Work with other work of the Project. The superintendent and all assistants shall be physically fit for their work and capable of going to all locations where Work is being performed. A communication given to the superintendent shall be binding on the Construction

Manager. Immediately after the award of Contract, the Construction Manager shall submit to the Consultant a list of Construction Manager's employees and consultants, including names, positions held, addresses, telephone numbers and emergency contact numbers.

17.3 The superintendent assigned shall not be changed except under the following circumstances: (1) Where the superintendent ceases to be employed by the Construction Manager, in which case the Construction Manager shall give timely written notice to the Owner of the impending change of the superintendent and a reasonable explanation for the change; or (2) Where the Owner or the Consultant have reasonable grounds for dissatisfaction with the performance of the superintendent and give written notice to the Construction Manager of the grounds. In either case, the Construction Manager shall obtain prior written approval from the Owner of the qualifications of the proposed replacement superintendent. Such prior approval will not be unreasonably withheld.

17.4 If the Owner or Consultant determines that the superintendent is not performing, or is incompetent to perform the required Work, the Owner may direct the Construction Manager to remove the superintendent from the Project and replace the superintendent with an employee who has the necessary expertise and skills to satisfactorily perform the Work.

ARTICLE 18 - CHANGES IN THE WORK

18.1 The Owner, at any time after execution of the Contract, may make changes within the general scope of the Contract or issue additional instructions, require additional Work, or direct the deletion of Work. The Owner's right to make changes shall not invalidate the Contract or relieve the Construction Manager of any obligations under the Contract Documents. All such changes to the Work shall be authorized in writing by Change Order and shall be executed under the conditions of the Contract Document. Any adjustment of the Contract Amount or Time of Completion, as may be appropriate, shall be made only at the time of ordering such change. Change order proposals based on a reservation of rights, whether for additional compensation to be determined at a later date or for an extension of time to be determined at a later date, will not be considered for approval and shall be returned to the Construction Manager without action.

18.2 The cost or credit resulting from a change in Work shall be determined in one or more of the following ways:

18.2.1 By unit prices named in the Contract or additional unit prices subsequently agreed upon;

18.2.2 By agreement on a lump sum properly itemized and supported by sufficient substantiating data to permit evaluation;

18.2.3 By an amount agreed upon by the Construction Manager and the Owner as a mutually acceptable fixed or percentage fee.

18.3 All lump sum proposals shall include a detailed cost breakdown satisfactory to the Consultant and to the Owner for each component of Work indicating both labor and material costs. This cost breakdown shall be submitted to the Consultant promptly and with a goal of seven (7) Calendar Days or less after receipt of the proposal request.

18.3.1 In computing labor costs, the hourly labor rates shall not exceed a mutually agreeable combined hourly labor rate plus fringe benefits negotiated with the Owner based on a presentation of acceptable documentation by the CM. For the purposes of this Article, the term “fringe benefits” shall mean those funds transferred irrevocably to a third party for payment/distribution. In addition,

there may be added by the Sub-contractor an amount agreed upon, but not to exceed ten percent (10%) of the actual cost, for overhead and profit.

18.3.2 The CM is entitled to a mark-up for bonds and insurance on all change orders. For change orders coded "End User Requested Changes" or "Other Owner Requested Changes" the CM may add overhead & profit in addition to the bonds and insurance referenced above. The mark-ups shall not exceed the combined percentage for overhead and profit, bonds, and insurance stated in the CM's "Financial Proposal Summary". These mark-ups will not be added to the individual change orders but will be reconciled by amendment at the completion of the project and/or on an annual basis for those projects exceeding 12 months in duration.

18.4 If none of the above methods are mutually agreed upon or if the Construction Manager does not respond promptly, a change may be made by unilateral determination by the Owner and/or the Consultant of reasonable costs or savings attributable to the change, including a reasonable allowance for overhead and profit. If this method is utilized, the Construction Manager shall promptly proceed with the Work involved in the change upon receipt of a written order signed by the Owner. In such case, the Construction Manager shall keep and present an itemized accounting of labor, equipment, material and other costs, in such form as may be prescribed by the Consultant.

18.5 In all cases where Change Orders are determined by unit prices set forth in the Contract Documents, no amount is to be added for additional overhead and profit.

18.6 The Construction Manager shall keep and present in such form as the Consultant may direct, a correct account of all items comprising the net cost of such Work, together with vouchers. The determination of the Consultant and/or the Owner shall be final upon all questions of the amount and cost of extra Work and changes in the Work, and it shall include in such cost, the cost to the Construction Manager of all materials used, the cost of all labor (including social security, old age and unemployment insurance, fringe benefits to which the employee is entitled, and Workers Compensation insurance), and the fair rental of all machinery used upon the extra Work, for the period of such use, which was upon the Work before or which shall be otherwise required by or used upon the Work before or after the extra Work is done. If the extra Work requires the use of machinery not already on the Project site, or to be otherwise used upon the Work, then the cost of transportation of such machinery to and from the Project site shall be added to the fair rental value. Transportation costs shall not be allowable for distances exceeding one hundred (100) miles.

18.7 The Construction Manager shall not include or allow to be included in the cost of change in the Work any cost or rental of small tools, or any portion of the time of the Construction Manager or the superintendent, or any allowance for the use of capital, or for the cost of insurance or bond premium or any actual or anticipated profit, or job or office overhead. These items are considered as being covered under the added amount for general overhead addressed in Article 18.3

18.8 The Owner will not pay claims made for lost opportunities, claims made for lost production or production inefficiencies or claims made that are formula based.

18.9 Pending final determination of value, partial payments on account of changes in the Work may be made on recommendation of the Consultant. All Change Orders shall be in full payment and final settlement of all claims for direct, indirect and consequential costs, including all items covered and affected. Any such claim not presented by the Construction Manager for inclusion in the Change Order shall be waived.

18.10 The Consultant may authorize minor changes in the Work which do not involve additional cost or extension of the Contract Time, and which are not inconsistent with the intent of the Contract

Documents. Such changes shall be made by an ASI issued by the Consultant, and shall be binding on the Owner and the Construction Manager. The Construction Manager shall carry out such orders promptly. If the Construction Manager should claim that an ASI involves additional cost or delay to the completion of the Work, the Construction Manager shall give the Consultant written notice thereof within ten (10) Calendar Days after receipt of the written ASI. If this notification does not occur, the Construction Manager shall be deemed to have waived any right to claim or adjustment to the contract sum or to the contract completion time.

18.10.1 If the Construction Manager claims that any instructions by the Consultant involve additional cost or time extension, the Construction Manager shall give the Consultant written notice thereof within ten (10) Calendar Days after the receipt of such instructions and before proceeding to execute the change in Work. The written notice shall state the date, circumstances, whether a time extension will be requested, and the source of the order that the Construction Manager regards as a Change Order. Unless the Construction Manager acts in accordance with this procedure, any oral order shall not be treated as a change and the Construction Manager hereby waives any claim for an increase of the Contract amount or extension of the contract time.

18.11 Requests for extension of time related to changes in the Work shall be submitted in accordance with the requirements of Article 21 of these General Conditions.

18.12 Prior to final payment, the Construction Manager shall provide to the Owner a full accounting of executed change orders by and between the Construction Manager and the Trade Contracts. The Construction Manager shall also provide a reconciliation of that accounting against the executed change orders by and between the Owner and the Construction Manager.

ARTICLE 19 - RULES AND MEASUREMENTS FOR EXCAVATION

19.1 If applicable, the following Rules and Measurements shall apply to the use of Unit Prices for the excavation portion of the Work:

19.1.1 Except as provided in this Article 19 for arbitrary measurements, the quantity of excavation shall be its in-place volume before removal.

19.1.2 No allowance will be made for excavating additional material of any nature taken out for the convenience of the Construction Manager beyond the quantity computed under these "Rules and Measurements."

19.1.3 The quantities of excavation shall be computed from instrument readings taken by the Consultant’s representative in vertical cross sections located at such intervals that will assure accuracy.

19.1.4 "Trench Excavation" for pipes shall arbitrarily be assumed to be two feet (2') wider than the outside diameter of the pipe barrel and with sides vertical.

19.1.5 The quantities shall be computed from plan size, or if there are no drawings, from actual measurements of the Work in place.

19.1.6 Each unit price shall cover, among other things, engineering (surveying) costs and keeping excavating dry.

19.1.7 Earth excavation for structures will be measured between the vertical planes passing 18 inches beyond the outside of the footings and from the surface of the ground to the neat lines of the bottom of the structure.

19.1.8 Rock excavation for structures will be measured between the vertical planes passing 18 inches beyond the outside of the footings and from the surfaces of the rock to the neat lines of the bottoms of the structures or the actual elevation of the rock ledge.

19.1.9 Rock excavation for pipelines trenches, unless otherwise provided for in the Specifications, shall be measured as follows: An arbitrary width of 18 inches plus the nominal diameter of the pipe multiplied by the depth from the surface the rock to six (6) inches below the invert for pipe 24 inches in diameter or less and eight (8) inches below the invert for all pipe greater than 24 inches in diameter. No additional compensation will be allowed for excavation for bell holes, gates or other purposes. The measurement of rock excavation for manholes shall be in accordance with Section 19.1.8 above.

19.1.10 Unclassified excavation shall be measured in the same manner as earth excavation.

ARTICLE 20 - CONCEALED CONDITIONS

20.1 The Contract Drawings show the approximate location of the existing and new utility lines. These lines have been identified and located as accurately as possible using available information. The Construction Manager is responsible for verifying all actual locations. If utilities require relocation or rerouting that is not shown or indicated to be relocated or rerouted, the Construction Manager shall contact and cooperate with the Consultant to make the required adjustments. Any request for change in the Contract Amount by the Construction Manager shall be made pursuant to Article 18 of the General Conditions.

20.2 If any charted or uncharted utility service is interrupted by activities of the Construction Manager or the Construction Manager's Sub-contractor(s) for any reason, the Construction Manager shall work continuously to restore service to the satisfaction of the Owner.

20.2.1 If any charted utility service, or any uncharted utility service the existence of which could have been discovered by careful examination and investigation of the site of the Work by the Construction Manager, is interrupted by activities of the Construction Manager or the Construction Manager's Sub-contractor(s) for any reason, the entire cost to restore service to the satisfaction of the Owner shall be paid by the Construction Manager. Should the Construction Manager fail to proceed with appropriate repairs in an expedient manner, the Owner reserves the right to have the work/repairs completed and the cost of such work/repairs deducted from the monies due or to become due to the Construction Manager pursuant to Article 22 of the General Conditions.

20.3 The Construction Manager shall promptly, but in no case more than ten (10) Calendar Days from the time of discovery, and before the conditions are disturbed, notify Consultant in writing of:

20.3.1 Subsurface or latent physical conditions or any condition encountered at the site which differ materially from those indicated in the Contract Documents and which were not known by Construction Manager or could not have been discovered by careful examination and investigation of the site of the proposed Work;

20.3.2 Unknown and unexpected physical conditions at the site, of an unusual nature, differing materially from those ordinarily encountered in the locale or generally recognized as inherent in the Work provided for in this Contract or,

20.3.3 Concealed or unknown conditions in an existing structure which are at variance with the conditions indicated by the Contract Documents, which are of an unusual nature, differing materially from those ordinarily encountered and generally recognized as inherent in the Work provided for in this Contract, and which were not known by the Construction Manager and could not have been discovered by careful examination and investigation of the site of the Work.

20.4 The Consultant shall promptly investigate the conditions discovered. If the Consultant finds that conditions, which are materially different from those ordinarily encountered and generally recognized as inherent in the Work provided for in this Contract, were not known by the Construction Manager, and could not have been discovered by careful examination and investigation of the site of the Work, have caused or would cause a material increase or decrease in the Construction Manager's cost of construction or the time required for performance of any part of the Work under this contract, the Consultant will recommend and the Owner will make an equitable adjustment in the Contract Amount and/or the time allotted for performance in the Contract Documents. Failure by the Construction Manager to provide written notice to the Owner of such claims for additional compensation or time for performance within ten (10) Calendar Days of discovery of such conditions shall constitute a waiver by the Construction Manager of the right to make such claims. The Owner will not pay claims made for lost opportunities, claims made for lost production or production inefficiencies or claims made that are formula based.

20.5 If the Consultant determines that changed conditions do not exist or are not materially different and no adjustment in the Contract Amount or time is warranted, the Construction Manager shall continue performance of the Contract as directed by the Consultant. No claim by the Construction Manager under this clause shall be allowed unless the required written notice is given and the Consultant is given adequate opportunity to investigate the conditions encountered prior to disturbance. The failure of the Construction Manager to give the Consultant proper notice of a differing site condition shall not affect the Owner's right to an equitable adjustment of the contract price or time if there is a decrease in the Contract Amount or time required to perform the Work.

ARTICLE 21 - DELAYS AND EXTENSION OF TIME

21.1 It is agreed that time is of essence for each and every portion of this Contract and where additional time is allowed for the completion of the Work or any part of the Work under this Contract, the new time limit fixed by such time extension shall be of the essence of this Contract. An extension of time shall not be cause for extra compensation under this Contract, except as set forth in Article 21.10 below.

21.2 The Construction Manager will, subject to the provisions of Articles 21.7, 21.8 and 21.9 below, be granted an extension of time and/or relief from liquidated damages when the delay in completion of the Work is due to:

21.2.1 Any preference, priority, or allocation order duly issued by the government;

21.2.2 Unforeseeable causes beyond the control and without the fault or negligence of the Construction Manager including, but not limited to, acts of God, or of the public enemy, acts of the Owner, acts of another contractor in the performance of a contract with the Owner, floods, epidemics, quarantine restrictions, strikes, and freight embargoes.

21.2.2.1For such delays which stop all work on the Project for thirty (30) Calendar Days or more, the Construction Manager shall be authorized at its discretion to remove its people from the site and return when the normal progress of the work may continue.

21.2.3 Regardless of the cause of a delay, the Construction Manager shall expend all reasonable effort to mitigate the impact of any delay.

21.2.4 Requests for additional time due to delays in transportation or due to failures of suppliers shall not be considered for approval.

21.3 Requests for extensions of time and/or relief from liquidated damages, except for weather related claims, shall be made in writing not later than ten (10) Calendar Days after the beginning of the delay. Requests for extension of time or relief from liquidated damages shall be stated in numbers of whole Calendar Days.

21.4 Except as otherwise provided in the Contract Documents, extensions of the contractually required completion dates may be granted for unusually bad weather on the Project. Unusually bad weather as used herein means daily temperature or precipitation that exceeds the normal weather recorded and expected for the locality and/or the season or seasons of the year. For the purposes of this contract, it is mutually agreed that the following chart accurately defines the number of days in each month on which bad weather can reasonably be anticipated to impact weather dependent construction operations, and the Construction Manager shall anticipate this normal seasonal weather in the development of the Project baseline schedule.

Mean Number of Days When	Jan.	Feb.	Mar.	Apr.	May	Jun.	Jul.	Aug.	Sep.	Oct.	Nov.	Dec.
Max Temp 32° or Below	9	6	1	0	0	0	0	0	0	0	1	5
Precip. Is 0.10 Inch or Greater	7	6	9	7	8	8	8	6	5	5	7	7

For the purpose of this Contract, "unusually bad weather" shall be interpreted as either 1) those days in a given month on which rainfall was 0.10 inch or more that exceed the number of days shown in the row for "Precip" or 2) those days in a given month on which maximum temperature was 32 degrees F or below that exceed the number of days shown in the row for "Max Temp", whichever is greater.

21.4.1 Requests for extension of time due to unusually bad weather that could not reasonably have been anticipated at the time of execution of the Contract shall be made in writing not later than the tenth calendar day of the month following the month in which the delay occurred.

21.4.2 Requests for an extension of time due to unusually bad weather shall be considered for approval only if it is shown that a) the unusual weather event delayed work on a specific weather dependent activity or activities that had been planned to be underway on the date(s) on which the weather event occurred, as shown in the most recent update to the Project schedule that had been submitted to the Owner prior to the date of the event, and b) only if the delay to that activity or activities is shown to be the proximate cause of a corresponding delay to the contractually required completion dates for the Project shown in the most recent update to the Project schedule. The actual dates on which the delay(s) occurred must be stated and the specific activities that were directly impacted must be identified. In the event of concurrent delays, only those activities actually

impacting contractually required completion dates will be considered in evaluating the merit of a delay request. Time extensions will not be considered if such adjustments do not exceed the total or remaining "float" associated with the impacted activities at the time of delay as shown in the most recent update to the Project schedule, nor for concurrent delays not caused by the Owner.

21.4.3 In anticipation of the possibility of delay due to unusually bad weather, the Construction Manager shall identify those activities in the baseline schedules, and those activities subsequently added to updated schedules, that might reasonably be expected to be delayed by such weather.

21.4.4 Delays caused by unusually bad weather shall be incorporated in the Project schedule when the schedule is next updated by showing actual dates and/or percent complete for those activities that were impacted by the unusually bad weather as well as the effects of any effort to mitigate such delays. When claims are submitted for time extensions resulting from more than one occurrence of unusually bad weather during a month, the Project schedule shall be updated to reflect such separate events sequentially so that the impact of each subsequent occurrence is shown on an adjusted Project schedule that includes all prior claims for additional time.

21.5 In addition to the requirements of Article 21.7 and Article 21.8 below, any request for an extension of time for strikes or lockouts shall be supported by a written statement of facts concerning the strike including, but not limited to, the dates, the craft(s) affected, the reason for the strike, efforts to resolve the dispute, and efforts to minimize the impact of the strike on the Project.

21.6 Approval of time extensions for changes in the Work will depend upon the extent, if any, to which the changes cause delay in the completion of the various elements of construction. The Change Order granting the time extension may provide that the Contract Time will be extended only for those specific elements so delayed and that other Work will not be altered.

21.7 The Contract Time will only be adjusted for causes specified above. Extensions of time will only be approved if the Construction Manager provides justification supported by the Project schedule or other acceptable data that 1) such changes are, in fact, on the critical path and extend the contractually required completion dates, and 2) the Construction Manager has expended all reasonable effort to minimize the impact of such changes on the construction schedule. No additional extension of time will be granted subsequently for claims having the basis in previously approved extensions of time.

21.8 In support of requests for an extension of time not caused by unusual inclement weather, and concurrently with the submittal of any such request, the Construction Manager shall submit to the Consultant and the Owner a written impact analysis showing the influence of each such event on contractually required completion dates as shown in the updated Project schedule most recently submitted to the Owner prior to the event. The analysis shall include a partial network diagram showing a sequence of new or revised activities and/or durations that are proposed to be added to the existing schedule including related logic (a "fragnet"). This impact analysis and the fragnet shall include the new activities and/or activity revisions proposed to be added to the existing schedule and shall demonstrate the claimed impact on the critical path and the contractually required completion dates. The Construction Manager will not be granted an extension of time and/or relief from liquidated damages when the delay to completion of the work is attributable to, within the control of, or due to the fault, negligence, acts, or omissions of the Construction Manager and/or the Construction Manager's contractors, subcontractors, suppliers, or their respective employees and agents. Time extensions will not be considered in the event such adjustments do not exceed the total or remaining "float" associated with the impacted activities at the time of delay, nor for concurrent delays not caused by the Owner. In the event of concurrent delays, only that event actually impacting contractually required completion dates will be considered in adjusting the schedule and evaluating the merit of a

delay claim. Requests for an extension of time which are not supported by this information shall not be considered for approval.

21.9 Approved extensions of time not caused by unusual inclement weather shall be incorporated in a revised schedule at the time of approval. No subsequent requests for time extension will be considered unless all previous approved time extensions have been incorporated in the Project schedule on which the requests are based.

21.10 Except as provided for in Article 21.10.1 through 21.10.3 below, no payment or compensation shall be made to the Construction Manager and extensions of the time fixed for completion of the Contract shall be the Construction Manager's sole remedy for any and all delays, hindrances, obstructions or impacts in the orderly progress of the Work.

21.10.1 In addition to the provisions of Articles 18.3 and 18.3.1 above, and subject to the requirements of Article 21.8 and 21.8.1 above, if the Owner orders changes to the scope of Work for the Project that extend the then current contractually required completion dates of the Project, the Construction Manager shall be entitled to reimbursement for job site, general conditions and staffing costs associated with such delay.

21.10.2 If delays, hindrances, impacts or obstructions of the Construction Manager's performance of the Contract are in whole or in part within the control of the Owner and, subject to the requirements of Article 21.8 and 21.8.1, extend contractually required completion dates of the Project, the Construction Manager shall be entitled to reimbursement for job site, general conditions and staffing costs for that portion of the costs caused by acts or omissions of the Owner.

21.10.3 Such reimbursements shall not include consequential or similar damages, exemplary damages, damages based on unjust enrichment theory, formula based delay claims, or any element of home office overhead.

ARTICLE 22 - CORRECTION OF WORK BEFORE FINAL PAYMENT

22.1 The Construction Manager shall promptly remove from the site and replace any material and/or correct any Work found by the Consultant to be defective or that fails to conform to the requirements of the Contract, whether incorporated in the Work or not, and whether observed before or after Substantial or Final Completion. The Construction Manager shall bear all costs of removing, replacing or correcting such Work or material including the cost of additional professional services necessary, and the cost of repairing or replacing all Work of separate contractors damaged by such removal or replacement.

22.2 The Consultant will notify the Construction Manager and the Owner immediately upon its knowledge that additional services will be necessary. The Owner may consent to accept such nonconforming Work and materials with an appropriate adjustment in the Contract Amount. Otherwise, the Construction Manager shall promptly replace and re-execute the Work in accordance with the Contract Documents and without expense to the Owner and shall bear the expense of making good all work of other contractors destroyed or damaged by such removal or replacement. If the Construction Manager fails to commence and continue to correct non-conforming Work within a reasonable time as determined by the Consultant, the Owner may without limitation of other rights available to the Owner and without prejudice to other remedies, take any necessary action to make the necessary corrections. If the Owner makes required corrections for non conforming Work or materials, a Change Order will be issued reflecting an equitable deduction from the Contract Amount. This amount will be deducted from payments due to the Construction Manager or, if no additional

payments are due, Construction Manager or the Construction Manager's surety shall be responsible for payment of this amount.

ARTICLE 23 - CORRECTION OF WORK AFTER FINAL PAYMENT

23.1 Neither the final certificate of payment nor any provisions in the Contract Documents shall relieve the Construction Manager of responsibility for materials and equipment incorporated into the Work that fails to meet specification requirements, or for the use of faulty materials or poor quality workmanship. If within one year after the date of Substantial Completion of the Work or designated portion thereof, any of the Work is found to be defective or not in accordance with the requirements of the Contract Documents, the Construction Manager shall correct it promptly after receipt of written notice from the Owner to do so. The Construction Manager shall correct any defects due to these conditions and pay for any damage to other Work resulting from their use. Nothing contained in this clause shall be construed to establish a period of limitation with respect to any obligation of the Construction Manager under the Contract including, but not limited to, warranties. The obligation of the Construction Manager under this section shall be in addition to and not in limitation of any obligations imposed by special guarantees or warranties required by the Contract, given by the Construction Manager, or otherwise recognized or prescribed by law.

23.2 In addition to being responsible for correcting the Work and removing any non-conforming Work or materials from the job site, the Construction Manager shall bear all other costs of bringing the affected Work into compliance with the Contract requirements. This includes costs of any required additional testing and inspection services, Consultant's services, and any resulting damages to other property or to work of other contractors or of the Owner.

23.3 If the Construction Manager fails to correct nonconforming Work within a reasonable time as determined by the Consultant, the Owner may take necessary actions to make the necessary corrections. If the Owner makes required corrections for nonconforming Work or materials after Final Payment to the Construction Manager, the Owner shall be entitled to recover all amounts for such corrections, including costs and attorney's fees, from Construction Manager or surety.

ARTICLE 24 - TERMINATION OF CONTRACT FOR CONVENIENCE OF OWNER

24.1 The Owner, by written notice to the Construction Manager, may terminate this Contract in whole or in part when it is in the interest of the Owner, at the sole discretion of the Owner. In such case, the Construction Manager shall be paid for all Work in place and a reasonable allowance for profit and overhead on Work done, provided that such payments shall not exceed the total Contract price as reduced by the value of the Work as yet not completed. The Construction Manager shall not be entitled to profit and overhead on Work not performed.

ARTICLE 25- OWNER'S RIGHT TO STOP WORK

25.1 If the Construction Manager fails to correct defective Work as required, or persistently fails to carry out the Work in accordance with the Contract Documents, the Owner by written notice may order the Construction Manager to stop the Work or any portion of the Work until the cause for the order has been eliminated to the satisfaction of the Owner. The Consultant may stop Work without written notice for 24 hours whenever in its professional opinion such action is necessary or advisable to insure conformity with the Contract Documents. The Construction Manager shall not be entitled to an adjustment in the Contract Time or Amount under this clause in the event such stoppages are determined to be the fault of the Construction Manager or its Sub-contractor(s). The right of the Owner or Consultant to stop Work shall not give rise to a duty on the part of the Owner or Consultant to exercise this right for the benefit of the Construction Manager or others.

ARTICLE 26 -TERMINATION OF CONTRACT FOR DEFAULT ACTION OF CONSTRUCTION MANAGER

26.1 In addition to its rights under Articles 24 and 25, the Owner may terminate the contract upon the occurrence of any one or more of the following events:

26.1.1 If the Construction Manager refuses or fails to prosecute the Work (or any separable part thereof) with such diligence as will insure its completion within the agreed upon time; or if the Construction Manager fails to complete the Work within such time;

26.1.2 If the Construction Manager is adjudged a bankrupt or insolvent, or makes a general assignment for the benefit of creditors, or if the Construction Manager or a third party files a petition to take advantage of any debtor's act or to reorganize under the bankruptcy or similar laws concerning the Construction Manager, or if a trustee or receiver is appointed for the Construction Manager or for any of the Construction Manager's property on account of the Construction Manager's insolvency, and the Construction Manager or its successor in interest does not provide adequate assurance of future performance in accordance with the Contract within ten (10) days of receipt of a request for assurance from the Owner;

26.1.3 If the Construction Manager repeatedly fails to supply sufficient qualified supervision of the work, or repeatedly fails to ensure that Sub-contractors supply adequate supervision, suitable materials or equipment, or adequate numbers of skilled workmen and supervision to the Work;

26.1.4 If the Construction Manager repeatedly fails to make prompt payments to Sub-contractors or suppliers at any tier, or for labor, materials or equipment;

26.1.5 If the Construction Manager disregards laws, ordinances, rules, codes, regulations, orders or similar requirements of any public entity having jurisdiction;

26.1.6 If the Construction Manager disregards the authority of the Consultant or the Owner;

26.1.7 If the Construction Manager performs Work which deviates from the Contract Documents, and neglects or refuses to correct rejected Work; or

26.1.8 If the Construction Manager otherwise violates in any material way any provisions or requirements of the Contract Documents.

26.2 Once the Owner determines that sufficient cause exists to justify the action, the Owner may terminate the Contract without prejudice to any other right or remedy the Owner may have, after giving the Construction Manager and its Surety three (3) Calendar Days notice by issuing a written Declaration of Default. The Owner shall have the sole discretion to permit the Construction Manager to remedy the cause for the contemplated termination without waiving the Owner's right to terminate the Contract.

26.3 In the event that the Contract is terminated, the Owner may demand that the Construction Manager's Surety take over and complete the Work on the Contract. The Owner may require that in so doing, the Construction Manager's Surety not utilize the Construction Manager in performing the Work. Upon the failure or refusal of the Construction Manager's Surety to take over and begin completion of the Work within twenty (20) Calendar Days after the demand, the Owner may take over the Work and prosecute it to completion as provided below.

26.3.1 In the event that the Contract is terminated and the Construction Manager's Surety fails or refuses to complete the Work, the Owner may take over the Work and prosecute it to completion in accordance with the laws of the Commonwealth, by contract or otherwise, and may exclude the Construction Manager from the site. The Owner may take possession of the Work and of all of the Construction Manager's tools, appliances, construction equipment, machinery, materials, and plant which may be on the site of the Work, and use the same to the full extent they could be used by the Construction Manager, without liability to the Construction Manager. At the Owner's sole discretion, the Owner has the right to take assignment of any or all portions of the contract work in order to prosecute the completion of the Work. In exercising the Owner's right to prosecute the completion of the Work, the Owner may also take possession of all materials and equipment stored at the site or for which the Owner has paid the Construction Manager but which are stored elsewhere, and finish the Work as the Owner deems expedient. In such case, the Construction Manager shall not be entitled to receive any further payment until the Work is finished.

26.3.2 If the unpaid balance of the Contract Price exceeds the direct and indirect costs and expenses of completing the Work including compensation for additional professional and Consultant services, such excess shall be used to pay the Construction Manager for the cost of the Work it performed and a reasonable allowance for overhead and profit. If such costs exceed the unpaid balance, the Construction Manager or the Construction Manager's Surety shall pay the difference to the Owner. In exercising the Owner's right to prosecute the completion of the Work, the Owner shall have the right to exercise its sole discretion as to the manner, methods, and reasonableness of the costs of completing the Work and the Owner shall not be required to obtain the lowest figure for Work performed in completing the Contract. In the event that the Owner takes bids for remedial Work or completion of the Project, the Construction Manager shall not be eligible for the award of such Contract.

26.3.3 The Construction Manager shall be liable for any damage to the Owner resulting from the termination or the Construction Manager's refusal or failure to complete the Work, and for all costs necessary for repair and completion of the Project above the amount of the Contract. The Construction Manager shall be liable for all attorney's fees, costs and expenses incurred by the Owner to enforce the provisions of the Contract.

26.3.4 If liquidated damages are provided in the Contract and the Owner terminates the Contract, the Construction Manager shall be liable for such liquidated damages, as provided for in Article 29.2 and 29.3 below, until Substantial Completion and Final Completion of the Work are achieved.

26.3.5 In the event the Contract is terminated, the termination shall not affect any rights of the Owner against the Construction Manager. The rights and remedies of the Owner under this Article are in addition to any other rights and remedies provided by law or under this Contract. Any retention or payment of monies to the Construction Manager by the Owner will not release the Construction Manager from liability.

26.3.6 In the event the Contract is terminated under this Article, and it is determined for any reason that the Construction Manager was not in default under the provisions of this Article, the termination shall be deemed a Termination for Convenience of the Owner pursuant to Article 24 and the rights and obligations of the parties shall be determined in accordance with Article 24.

ARTICLE 27 - SUSPENSION OF WORK

27.1 The Owner or the Consultant may, at any time and without cause, order the Construction Manager in writing or cause the Construction Manager to suspend, delay or interrupt all or any part of the Work for such period of time as the Owner may determine to be appropriate for its convenience.

Adjustment may be made for any increase in the Contract time necessarily caused by such suspension or delay, in accordance with Article 21.

ARTICLE 28 - TIME OF COMPLETION

28.1 The Construction Manager shall begin the Work on the date of commencement as specified in the Work Order. All time limits stated in the Contract Documents are of the essence of the Contract. The actual end of the Contract Time shall be the date specified on the approved certificate of Substantial Completion. The time for completion set forth in the Contract is a binding part of the Contract upon which the Owner may rely in planning the use of the facilities to be constructed and for all other purposes.

28.2 Substantial Completion is defined in Article 1.1.17 of these General Conditions. Only incidental corrective Work under punch lists and final cleaning (if required) for Owner's full use shall remain for Final Completion. The ability to occupy or utilize shall include regulatory authority approval unless regulatory approval is delayed due to actions of the Owner or the Consultant. When the Owner accepts and occupies a portion of the Project, the operation, maintenance, utilities, and insurance of that portion of the Project becomes the responsibility of the Owner.

28.3 The date of Substantial Completion shall be that date certified by the Owner, in accordance with the following procedures, that the Work is sufficiently complete to occupy or utilize as defined above.

28.3.1 When the Construction Manager considers the entire Work is substantially complete as defined in Article 1.1.17 of these General Conditions, and is ready for its intended use, the Construction Manager shall notify the Consultant in writing and request an inspection. The declaration and request shall be accompanied by a list prepared by the Construction Manager of those items of Work still to be completed or corrected. The failure of the Construction Manager or Consultant to include any item or items which are not completed or which need correction on such list shall not alter the responsibility of the Construction Manager to complete all Work in accordance with the Contract Documents.

28.3.2 The Consultant shall, within a reasonable time after receipt of notification from the Construction Manager of a declaration of Substantial Completion and request for inspection, make such inspection. Prior to the Substantial Completion Inspection and within sufficient time to allow the Consultant's review, the Construction Manager shall submit all As-Built drawings, Notice of Termination, catalog data, complete operating and maintenance instructions, manufacturer specifications, certificates, warranties, written guarantees and related documents required by the contract. The Consultant shall review said documents for accuracy and compliance with the Contract Documents and incorporate them into complete operating instructions and deliver them to the Owner.

28.3.3 If the Consultant considers the Work substantially complete, the Consultant shall recommend that the Owner prepare a Certificate of Substantial Completion which shall establish the date of Substantial Completion and the responsibilities between the Owner and Construction Manager for security, maintenance, heat, utilities and insurance, if not otherwise provided for in the Contract Documents, and a tentative list of items to be completed or corrected, and shall fix the time within which the Construction Manager shall complete the items listed therein. This time shall not exceed thirty (30) Calendar Days unless otherwise provided for in the Work Order. The Certificate of Substantial Completion shall be submitted to the Consultant and Construction Manager for their written acceptance of the responsibilities assigned to them in the certificate. The Project shall not be deemed substantially complete until the certificate is issued. If, after making the inspection, the

Consultant does not consider the Work substantially complete, the Consultant will notify the Owner and the Construction Manager in writing

28.4 Operation and Maintenance Manual Deliverables. In anticipation and preparation of completion of the Work and the closing out of the Project, and to facilitate training of the Owner's personnel in the maintenance and operation of the new installations, the Construction Manager shall comply with the requirements of Article 8.7 of the Special Conditions. (For the purposes of this article, air test and balance reports may be submitted at a later date with the request for certification of substantial completion.) These manuals shall be submitted to the Consultant for approval, and subsequently forwarded to the Owner's Project Manager by or before the time construction is 75% complete, as reflected by the Contractor's most recently submitted Application for Payment.

28.4.1 The provisions of Article 30.11 notwithstanding, if the Construction Manager meets the requirements of Article 28.4 above with respect to timely submittal of approvable Operation and Maintenance manuals and provided the project construction is 1) at least 75% complete and 2) is equal to or ahead of the approved progress schedule and 3) the Work completed is in compliance with the requirements of the contract documents, the Owner, at the sole discretion of the Director, Capital Projects Management Division may reduce the retainage to not less than three percent (5%) of the current Contract Amount. In the event the Construction Manager fails to submit acceptable O&M manuals prior to reaching 75% completion, it is agreed that the Owner at its sole discretion may deduct from the current and subsequent Applications for Payment an amount deemed by the Owner to be sufficient to encourage prompt compliance with this contractual requirement, until such time as acceptable O&M manuals are received.

28.5 Project Close Out. When the Construction Manager considers that all Work required by the Contract is 100% complete, including correction of any remaining punch list work or deficiencies, the Construction Manager shall notify the Consultant in writing and request a final inspection. The Consultant, upon receipt of written notice from the Construction Manager that the Work is complete and is ready for final inspection and acceptance, will promptly make such inspection and if the Consultant finds the Work completed and acceptable under the Contract Documents and the Contract fully performed, the Consultant will notify the Construction Manager in writing to submit, and will certify to the Owner a final Certificate for Payment in accordance with Articles 30.9 and 30.9.1 of these General Conditions. If the Construction Manager does not complete the punch items within the time designated, the Owner retains the right to have these items corrected at the expense of the Construction Manager including all architectural, engineering and inspection costs and expenses incurred by the Consultant and the Owner, and to deduct such costs and expenses from the funds being held in retainage. The Owner shall not be required to release the retainage until such items have been completed.

ARTICLE 29 - LIQUIDATED DAMAGES

29.1 The Owner and the Construction Manager recognize and agree that time is of the essence of this Contract and that the Owner will suffer financial loss if the Work is not completed within the time specified in the Contract plus any extensions that may be allowed. The parties further recognize the delays, expense and difficulties involved in proving the actual loss suffered by the Owner should the Work not be completed on time. The Owner and the Construction Manager agree on the amounts stated as liquidated damages in the Agreement. The Owner and Construction Manager agree that the amount stated as liquidated damages are not intended to be penalties.

29.2 Should the Construction Manager fail to satisfactorily complete the Work under Contract on or before the date stipulated for Substantial Completion, as adjusted by approved Change Orders, if any, the Construction Manager will be required to pay liquidated damages to the Owner for each

consecutive Calendar Day that the Owner is deprived of full use of the area beyond the date specified unless otherwise stipulated elsewhere by Owner. After the date for Substantial Completion has been certified by the Owner, the Construction Manager shall cease to owe liquidated damages until the date established for Final Completion.

29.3 If Final Completion is not achieved by the date established for Final Completion, as adjusted by approved Change Orders, if any, liquidated damages in the amount stipulated in the Agreement will become due and collectable. The Contract will be considered complete and Final Completion shall be deemed to have occurred when all Work has been completed in compliance with the Contract Documents and the Certificate of Final Completion has been issued by the Owner. No deduction or payment of liquidated damages will, in any degree, release the Construction Manager from further obligations and liabilities to complete the entire Contract. Permitting the Construction Manager to continue and finish the Work, or any part of it, after expiration of the Contract Time, shall in no way constitute a waiver on the part of the Owner of any liquidated damages due under the Contract.

ARTICLE 30 - PAYMENT TO THE CONSTRUCTION MANAGER

30.1 Payments on account of this Contract shall be made monthly as Work progresses. The Construction Manager shall submit to the Consultant, in the manner and form prescribed, an application for each payment, and, if required, receipts or other vouchers showing payments made for materials and labor, including payments to Sub-contractors. All payments shall be subject to any withholding or retainage provisions of this contract. All pay request documents, except the final payment, shall be submitted in whole dollar amounts. All payment applications from the Construction Manager shall include line items for overhead, profit and general condition costs.

30.2 The Consultant shall, within ten (10) Business Days after receipt of each application for payment, certify approval of payment in writing to the Owner and present the application to the Owner, or return the application to the Construction Manager indicating in writing its reasons for refusing to approve payment. The Owner, provided no exception is taken to the application for payment submitted by the Consultant, will issue payment on or within thirty (30) Business Days from the date received from the Consultant. A reasonable delay on the part of the Owner in making payment to the Construction Manager for any given payment shall not be grounds for breach of Contract. The Consultant may refuse to approve the whole or any part of any payment if it would be incorrect to make such presentation to the Owner.

30.3 If payment is requested on the basis of materials and equipment not incorporated in the Work, but delivered and suitably stored at an off jobsite location agreed to in writing by the Owner that meets the manufacturer's requirements for the stored material and not-comingled with other material, the Construction Manager must furnish the following:

30.3.1 A list of the materials consigned to the Project (which shall be clearly identified), giving the place of storage, together with copies of invoices.

30.3.2 Certification that all items have been tagged for delivery to the Project and that they will not be used for any other purpose.

30.3.3 A letter from the Surety indicating that the Surety agrees to the arrangements and that payment to the Construction Manager shall not relieve either the Construction Manager or its Surety of their responsibility to complete the Work.

30.3.4 Evidence of adequate insurance listing the Owner as an additional insured covering the material in storage.

30.3.5 Evidence that representatives of the Consultant have visited the Construction Manager's place of storage and checked all items listed on the Construction Manager's certificate. They shall certify, insofar as possible, that the items are in agreement with the Specifications and approve their incorporation into the Project.

30.4 The Owner will pay 80% of the invoiced value less retainage for materials stored off site providing the above conditions are met.

30.5 The Construction Manager's signature on each subsequent application for payment shall certify that all previous progress payments received on account of the Work have been applied to discharge in full all of the Construction Manager's obligations reflected in prior applications for payment.

30.6 Each payment made to the Construction Manager shall be on account of the total amount payable to the Construction Manager and the Construction Manager warrants and guarantees that the title to all materials, equipment and Work covered by the paid partial payment shall become the sole property of Owner free and clear of all encumbrances. Nothing in this Article shall be construed as relieving Construction Manager from the sole responsibility for care and protection of materials, equipment and Work upon which payments have been made or restoration of any damaged Work or as a waiver of the right of Owner to require fulfillment of all terms of the Contract Documents.

30.7 Within thirty (30) Calendar Days of the award of any Trade Contracts, and prior to submitting the next application for payment, the Construction Manager shall submit to the Consultant and the Owner for approval a detailed breakdown of the Contract Amount including all trade contracts that have been awarded as of the date of that application for payment pursuant to CSI specification divisions, divided so as to facilitate payment and correlated to the schedule required by General Conditions Article 32 of the Contract Documents. The total value of all activities shall add up to the Contract Amount. When approved by the Consultant and the Owner, this schedule shall be used as a basis for Construction Manager's applications for payment and may be used by the Owner to determine costs or credits resulting from changes in the Work. Failure to obtain the approval of the Schedules of Values shall be a basis for withholding payment to the Construction Manager.

30.8 Retainage – The Owner will retain ten percent (10%) of the Construction Manager’s progress payments, including amounts claimed for construction management fee until fifty one percent (51%) of the construction project has been completed. Thereafter, if the Work is fully in compliance with the requirements of the Contract and except as provided for in Article 28.4.1 above, the Owner shall retain five percent (5%) of the total contract amount until Substantial Completion and acceptance of all Work covered by this Contract, as collateral security to insure successful completion of the Work. For the purposes of this Article, the term “in full compliance” shall mean 1) that the progress of the Work is equal to or ahead of that predicted by the Project Baseline schedule and 2) the Work completed is in compliance with the requirements of the contract documents. Subsequent to the issuance of the Substantial Completion Certificate and depending upon the cost involved for the completion and/or correction of punch list items, the Consultant may recommend to the Owner an adjustment to the amount being held as retainage and, if approved by Owner, the amount of retainage may then be reduced and a sufficient sum retained by Owner to assure completion of the remaining unfinished Work. Retainage reduction as provided for in this Article 30.8 is contingent upon the Construction Manager and/or Sub-contractors being on or ahead of the approved progress schedule and on verification by the Consultant that the Work completed is in compliance with the requirements of the contract documents.

30.8.1 In addition to the retainage set forth above, the Owner may withhold from any monthly progress payments or nullify any progress payments in whole or in part as necessary to protect the Owner from loss on account of:

30.8.1.1 Defective Work which has not been remedied or completed Work which has been damaged requiring correction or replacement, or

30.8.1.2 Action required by the Owner to correct Defective Work or complete Work which the Construction Manager has failed or refused to correct or complete, or

30.8.1.3 Failure of the Construction Manager to perform any of its obligations under the Contract, or

30.8.1.4 Failure of the Construction Manager to make payment properly to Sub-contractors; suppliers of material, services or labor; or to reimburse the University for utilities or other services as provided for in the Contract;

30.8.1.5 Amounts to be withheld as liquidated damages for failure to complete the Project in the allotted Contract time.

30.8.2 When the Owner is satisfied that the Construction Manager has remedied any such deficiency, payments shall be made of the amount being withheld on the next scheduled application for payment.

30.9 Final Payment – When all Work is completed and acceptable and the Contract is fully performed, the Construction Manager will be directed to submit a final payment application for certification and the entire balance shall be due and payable upon a certification of completion by the Consultant that the Work is in accordance with the Contract Documents. Final change order reconciliation as per Article 18.12 must be provided prior to final payment.

30.9.1 Upon issuance of the Certificate of Final Completion by the Owner and submittal by the Construction Manager of all required documents and releases, all retained amounts shall be paid to the Construction Manager as part of the Final Payment. By accepting such payment, the Construction Manager certifies that all amounts due or that may become due to any Sub-contractor, any Consultant of the Construction Manager, or any vendors or material suppliers, have been paid or will be paid from the proceeds of the final payment; and that, further, there are not liens, claims or disputes involving the Owner or the Consultant that are outstanding or unresolved.

30.10 The Construction Manager shall promptly pay each Sub-contractor and material supplier upon receipt of payment from the Owner the amount to which said Sub-contractor and supplier is entitled, reflecting the percentage actually retained from payments to the Construction Manager on account of such Sub-contractor's work. The Construction Manager shall, by an appropriate Agreement with each Sub-contractor and material supplier, require each Sub-contractor and supplier to make payments to their sub-contractors, vendors and suppliers in similar manner.

The Consultant may, on request, furnish to any Sub-contractor or material supplier information regarding the percentages of completion applied for by the Construction Manager and the action thereon by the Consultant.

30.10.2 Neither the Owner nor the Consultant shall have any obligation to make payment to any Sub-contractor or material supplier except as may otherwise be required by law.

ARTICLE 31 - AUDITS

31.1 The Construction Manager's Trade Contractors', sub-contractors' and/or vendor's "records" shall upon reasonable notice be open to inspection and subject to audit and/or reproduction during normal business working hours as may be deemed necessary by the Owner at its sole discretion. Such audits may be performed by an Owner's representative or an outside representative engaged by the Owner. The Owner or its designee may conduct such audits or inspections throughout the term of this contract and for a period of three years after final payment, or longer if required by law. Owner's representative may (without limitation) conduct verifications such as counting employees at the Construction Site, witnessing the distribution of payroll, verifying information and amounts through interviews and written confirmations with Construction Manager's employees, field and agency labor, Trade Contractors and vendors.

31.2 "Records" as referred to in this Contract shall include any and all information, materials and data of every kind and character, including without limitation, records, books, papers, documents, subscriptions, superintendents' reports, drawings, receipts, vouchers and memoranda, and any and all other agreements, sources of information and matters that may in the Owner's judgment have any bearing on or pertain to any matters, rights, duties or obligations under or covered by any Contract Document. Such records shall include hard copy, as well as computer readable data if it can be made available, written policies and procedures; time sheets; payroll registers; cancelled payroll checks; subcontract files (including proposals of successful and unsuccessful bidders, bid recaps, etc.); original estimates; estimating work sheets; correspondence; change order files (including documentation covering negotiated settlements); back charge logs and supporting documentation; invoices and related payment documentation; general ledger; records detailing cash and trade discounts earned; insurance rebates and dividends; and any other Construction Manager or contractor records which may have a bearing on matters of interest to the Owner in connection with the Construction Manager's dealings with the Owner (all foregoing hereinafter referred to as the "records") to the extent necessary to adequately permit evaluation and verification of any or all of the following:

Compliance with Contract requirements for deliverables;
Compliance with approved plans and specifications;
Compliance with Owner's business ethics expectations;
Compliance with Contract provisions regarding the pricing of change orders;
Accuracy of Construction Manager representations regarding pricing of invoices; and
Accuracy of Construction Manager representations related to claims submitted by the Construction Manager or its payees.

31.3 The Construction Manager shall require all payees (examples of payees include Trade Contractors, Sub-contractors, vendors, and/or material suppliers) to comply with the provisions of this Article by including the requirements hereof in a written contract agreement between the Construction Manager and payees. Such requirements to include flow-down right of audit provisions in contracts with payees will also apply to Subcontractors and Sub-subcontractors, material suppliers, etc. The Construction Manager will cooperate fully and will cause all related parties and all of the Construction Manager's Trade Contractors and/or subcontractors (including those entering into lump sum subcontracts) to cooperate fully in furnishing or in making available to Owner from time to time whenever requested, in an expeditious manner, any and all such information, materials and data.

31.4 Owner's authorized representative or designee shall have reasonable access to the Construction Manager's facilities, shall be allowed to interview all current or former employees to discuss matters pertinent to the performance of this contract and shall provide adequate and appropriate work space in order to conduct audits in compliance with this Article. The Construction Manager and its payees agree bear their costs and expenses relating to any inspections and audits.

31.5 If an audit inspection or examination in accordance with this Article discovers any fraud or misrepresentation, or discloses overpricing or overcharges (of any nature) by the Construction Manager to the Owner, in addition to making adjustments for the overcharges, the reasonable actual cost of the Owner's audit shall be reimbursed to the Owner by the Construction Manager. Any adjustments and/or payments that must be made as a result of any such audit or inspection of the Construction Manager's invoices and/or records shall be made within Ninety (90) Calendar Days from presentation of the Owner's findings to the Construction Manager.

31.6 The provisions of Articles 31.1, 31.2 and 31.5 notwithstanding, the Owner shall have the right to conduct inspections and audits of any matter relating to the Contract Documents or the Work, which shall be for the Owner's sole benefit and shall not relieve the Construction manager, its sureties, contractors, subcontractors suppliers and their respective employees and agents of any obligations under the Contract Documents.

31.7 Any audits or inspections under Article 31 shall not constitute a waiver of any right the Owner has to accounting or discovery of records in the possession, custody or control of the Construction Manager, its sureties, contractors, subcontractors, vendors and their respective employees and agents

ARTICLE 32 - PROGRESS & SCHEDULING

32.1 If requested by the Owner during the Design Phase of the Project, and working in cooperation with the Owner and the Consultant(s), the Construction Manager shall prepare a Critical Path Method (CPM) type Design Phase schedule incorporating design phase and review activities through completion of the design and bidding of the Trade Contracts, shall include in this Design Phase schedule the broad categories of Work to be accomplished in the subsequent implementation of the design and construction of the Project, and shall modify and update this Design Phase schedule as necessary to reflect the actual status and then current plan for the Project.

32.2 The schedules submitted for this Project shall be prepared using Primavera P6 scheduling software. If approved by the University, and at the sole discretion of the University, schedules submitted using earlier versions of Primavera scheduling software (Primavera SureTrak or Primavera P3) may be converted to Primavera P6 format by the University for review purposes. However, the University will not be responsible for any inaccuracies that may result from such conversions.

32.2.1 Prior to bidding Trade Contracts, the Construction Manager shall prepare and submit to the Owner and the Consultant a preliminary CPM construction schedule for the Work that will be included in the Project bidding documents.

3.2.2.2 The schedules submitted for this Project shall coordinate Work in accordance with all schedules included in the Owner's approved Program. Construction work shall be scheduled and executed such that operations of the University are given first priority. This applies particularly to outages and restriction of access.

32.2.3 The schedules submitted for this Project shall not exceed time limits established for the Project. Schedules which reflect a duration less than the Contract Time are for the convenience of the Construction Manager and shall not be the basis of any claim for delay or extension of time.

32.2.4 Schedules shall be revised at appropriate intervals as required by the condition of the Work and the Project, shall be related to the entire Project to the extent required by the Contract Documents, and shall provide for expeditious and practicable execution of the Work.

32.2.5 The Construction Manager shall also submit a payment schedule indicating the percentage of the Contract Amount and the amount of the anticipated monthly payments that will be requested as the Project proceeds.

32.2.6 The Owner may withhold approval of all or a portion of progress payments until the progress payment schedule and construction schedule have been submitted by the Construction Manager.

32.3 The Construction Manager shall prepare and keep current, for the Consultant's approval, a separate schedule of submittals coordinated with the Construction Manager's CPM construction schedule that provides reasonable time for the Consultant to review the submittals.

32.4 The Construction Manager shall cause the work to be performed pursuant to the most recent schedules.

ARTICLE 33 - USE OF COMPLETED PORTIONS

33.1 Upon mutual Agreement between the Owner, Construction Manager, and Consultant, the Owner may use a completed portion of the Project after an inspection is made. Such possession and use shall not be deemed as acceptance of any Work not completed in accordance with the Contract Documents, nor shall such possession and use be considered to alter warranty obligations or cause any warranty period to commence prior to Substantial Completion.

ARTICLE 34 - INDEMNIFICATION

34.1 To the fullest extent permitted by law, the Construction Manager shall indemnify and hold harmless the Owner, its consultants, and their respective employees and agents from and against all claims, damages, losses and expenses, including attorney's fees, provided that any such claim, loss, damage or expense: (a) is attributable to bodily injury, sickness, disease or death, or to injury to or destruction of tangible property (other than the Work itself) including the loss of use resulting therefrom, and (b) is caused in whole or in part by any negligent act or omission of the Construction Manager, any Sub-contractor or material supplier, anyone directly or indirectly employed by any of them or anyone for whose acts any of them may be liable This basic obligation to indemnify shall not be construed to nullify or reduce other indemnification rights which the Owner, its consultants, and their respective employees and agents would otherwise have.

34.2 The Construction Manager shall also indemnify and hold harmless the Owner, its consultants, and their respective employees and agents from any claims relating to the Project brought against the Owner, its consultants, and their respective employees and agents by any Sub-contractor unless such claims are due to the gross negligence or misconduct of the Owner or Consultant.

34.3 In any and all claims against the Owner its consultants, and their respective employees and agents, by any employee of the Construction Manager, any Sub-contractor, any one directly or indirectly employed by any of them or anyone for whose acts any of them may be liable, the indemnification obligation under this Article shall not be limited in any way by any limitation on the amount or type of damages, compensation or benefits payable by or for the Construction Manager or any Sub-contractor under Worker's Compensation acts, disability benefit acts or other employee benefit acts.

34.4 The obligations of the Construction Manager under this Article shall not extend to the liability of the Consultant, his agents or employees, arising out of (1) the preparation or approval of maps, drawings, opinions, reports, surveys, Change Orders, designs or specifications, or (2) the

giving of or the failure to give directions or instructions by the Consultant, his agents or employees, provided such giving or failure to give is the primary cause of injury or damage.

ARTICLE 35 - INSURANCE

35.1 The Construction Manager shall furnish the Owner the Certificates of Insurance or other acceptable evidence that insurance is effective, and guarantee the maintenance of such coverage during the term of the Contract. Each policy of insurance, except Workers Compensation, shall name the University of Kentucky and the directors, officers, trustees and employees of the University as additional insured on a primary and non-contributory basis as their interest appears. Waiver of subrogation in favor of the University of Kentucky shall apply to all policies. Any endorsements required to validate such waiver of subrogation shall be obtained by the Construction Manager at the Construction Manager's expense.

35.2 The Construction Manager shall not commence, nor allow any Sub-contractor to commence Work under this Contract, until the Owner has reviewed the certificates and approved coverages and limits as satisfying the requirements of the bidding process.

35.3 Workers' Compensation and Employers' Liability Insurance. The Construction Manager shall acquire and maintain Workers' Compensation insurance with Kentucky's statutory limits and Employers' Liability insurance as defined in the Special Conditions for all employees who will be working at the Project site. In the event any Work is sublet, the Construction Manager shall require any Sub-contractor to provide proof of this insurance for the Sub-contractors' employees, unless such employees are covered by insurance provided by the Construction Manager.

35.4. The Construction Manager shall either require each Sub-contractor to procure and maintain insurance of the type and limits stated during the terms of the Contract, or insure the activities of such Sub-contractors under a blanket form as described below:

35.4.1 Commercial General Liability Insurance. The Construction Manager shall acquire and maintain a Broad Form Comprehensive General Liability (CGL) Insurance Policy including premises - operations, products/completed operations, blanket contractual, broad form property damage, real property fire legal liability and personal injury liability coverage. The Insurance Policy must be on an "occurrence" form only, unless approved by the Owner. Contractual liability must be endorsed to include defense costs. Products and completed operations insurance must be carried for two years following completion of the Work. Policies which contain Absolute Pollution Exclusion endorsements are not acceptable. Coverage must include pollution from "hostile fires". Where required by the risks involved, Explosion, Collapse and Underground (XCU) coverages shall be added by endorsement. If the work involved requires the use of helicopters, a separate aviation liability policy as defined in the Special Conditions will be required. If cranes and rigging are involved, a separate inland marine policy with liability limits as defined in the Special Conditions will be required.

35.4.1.1 The limits of liability shall not be less than defined in the Special Conditions.

35.4.2 Comprehensive Automobile Liability Insurance. The Construction Manager shall show proof and guarantee the maintenance of insurance to cover all owned, hired, leased or non-owned vehicles used on the Project. Coverage shall be for all vehicles including off the road tractors, cranes and rigging equipment and include pollution liability from vehicle upset or overturn. Policy limits shall not be less than defined in the Special Conditions.

35.4.3 Excess or Umbrella Liability Insurance. The Construction Manager shall acquire and maintain a policy of excess liability insurance in an umbrella form for excess coverages over the required primary policies of broad form commercial general liability insurance, business automobile liability insurance and employers' liability insurance. This policy shall have a minimum as defined in the Special Conditions for each occurrence in excess of the applicable limits in the primary policies. The excess liability policy shall not contain an absolute pollution exclusion and shall include coverages for pollution that may occur due to hostile fires and vehicle upset and overturn. The limits shall be increased as appropriate to cover any anticipated special exposures.

35.5 Builders Risk Insurance. The Construction Manager shall purchase and maintain an "all risk" Builder's Risk Insurance policy upon the Work at the site to the full insurable value thereof. Such insurance shall include interests of the Owner, Construction Manager, and all Sub-contractors and of their subcontractors. It shall insure against perils of fire, extended coverage, vandalism and malicious mischief. Construction Manager's work performed, and materials to be incorporated into the project and stored on the jobsite, will be covered. Builder's Risk does not include temporary buildings, or Construction Manager or Construction Manager's tools, equipment, or trailers and contents.

35.6 Insurance Agent and Company Insurance as required in the bidding process of the Project shall be written according to applicable state law in Kentucky. The policies shall be written by an insurer duly authorized to do business in Kentucky in compliance with KRS: 304.1-.100 and -110.

ARTICLE 36 - PERFORMANCE AND PAYMENT BONDS

36.1 The Construction Manager shall furnish a Performance Bond in the form provided in the Contract Documents in the full amount of the Contract Amount as security for the faithful performance of the Contract. The Construction Manager shall also furnish a Payment Bond in the form provided in the Contract Documents in the full amount of the Contract Amount for the protection of all persons performing labor or furnishing materials, equipment or supplies for the Construction Manager or its Sub-contractors for the performance of the Work provided for in the Contract, including security for payment of all unemployment contributions which become due and payable under Kentucky Unemployment Insurance Law.

36.2 Each bond furnished by the Construction manager shall incorporate by reference the terms of the Contract as fully as though they were set forth verbatim in such bonds. In the event the Contract Amount is adjusted by Change Order, the penal sum of both the performance bond and the payment bond shall be deemed increased by like amounts.

36.3 The performance and payment bonds shall be executed by a surety company authorized to do business in the Commonwealth of Kentucky, and the contract instrument of bonds must be countersigned by a duly appointed and licensed resident agent.

ARTICLE 37 - DAMAGED FACILITIES

37.1 The Construction Manager shall repair or replace, at no expense to the Owner, any damaged section of existing buildings, paving, landscaping, streets, drives, utilities, watersheds, etc. caused by Work performed under the Contract or incidental thereto, whether by the Construction Manager's own forces, Sub-contractors or by material suppliers. Such repair or replacement shall be performed by craftsmen skilled and experienced in the trade or craft for the original Work.

37.2 Water damage to the interior of any building caused by Work performed under the Contract or incidental thereto, whether by the Construction Manager's own forces, Sub-contractors, or by material suppliers, and whether occurring in a new or existing building, shall be repaired by the

Construction Manager at the Construction Manager's expense, and any materials damaged inside the building, including personal property, shall be repaired or replaced at the full replacement cost by the Construction Manager at the Construction Manager's expense.

37.3 For existing buildings, the Construction Manager, along with the Owner's Representative and Consultant, will tour the Project site to evaluate existing conditions and determine any existing damage before any Work on this Contract is done.

37.4 Should the Construction Manager fail to proceed with appropriate repairs in an expedient manner, the Owner reserves the right to have the Work/repairs completed and deduct the cost of such Work/repairs from amounts due or to become due to the Construction Manager. If the Owner deems it not expedient to repair the damaged Work, or if repairs are not done in accordance with the Contract, an equitable deduction from the Contract price shall be made.

ARTICLE 38 - CLAIMS & DISPUTE RESOLUTION

38.1 All Construction Manager's claims and disputes shall be referred to the Consultant for review and recommendation. All claims shall be made in writing to the Consultant and to the Owner's Project Manager not more than ten (10) days from the occurrence of the event which gives rise to the claim or dispute, or not more than ten (10) days from the date that the Construction Manager knew or should have known of the claim or dispute. Unless the claim is made in accordance with these requirements, it shall be waived. Any claim not submitted before Final Payment shall be waived. The Consultant shall render a written decision within fifteen (15) days following receipt of a written demand for the resolution of a claim or dispute.

38.1.1 The provisions of Article 43.2 notwithstanding, claims and disputes between the Construction Manager and any Sub-contractor or supplier shall not be referred to the Consultant except to request interpretation and/or clarification of the intent of the plans or specifications. Such claims and disputes between the Construction Manager and any Sub-contractor shall be resolved between those parties as required by Article 43.4 of these General Conditions.

38.2 The Consultant's decision shall be final and binding on the Construction Manager unless the Construction Manager submits to the Consultant and the Owner's Project Manager a written notice of appeal within fifteen (15) Calendar Days of the Consultant's decision. The Construction Manager must present within fifteen (15) Calendar Days of such notice to appeal a narrative claim in writing with complete supporting documentation. After receiving the written claim, the Project Manager will review the materials relating to the claim and may meet with the Consultant and/or the Construction Manager to discuss the merits of the claim. The Project Manager will render a decision within thirty (30) Calendar Days after receiving the written claim and supporting documentation. The decision of the Project Manager shall be final and binding pending further appeal as provided for in Article 39. If the Consultant or the Project Manager do not issue a written decision within thirty (30) calendar days after receiving the claim and supporting documentation, or within a longer period as may be established by the parties to the Contract in writing, then the Construction Manager may proceed as if an adverse decision had been received.

38.3 If the Project Manager does not agree with the Consultant's decision on a claim by the Construction Manager, the Project Manager shall notify the Construction Manager and the Consultant and direct the Construction Manager to perform the Work about which the claim was made and the Construction Manager shall proceed with such Work in accordance with the Project Manager's instruction. If the Construction Manager disagrees with a decision of the Project Manager concerning a Construction Manager's claim, the Construction Manager shall proceed with the Work as indicated by the Project Manager's decision.

38.4 The Construction Manager shall continue to diligently pursue Work under the Contract pending resolution of any dispute, and the Owner shall continue to pay for undisputed work in place.

ARTICLE 39 - CLAIMS FOR DAMAGE

39.1 Should either party to the Contract suffer damage because of wrongful act or neglect of the other party, or of anyone employed by them, or others for whose act they are legally liable, or if other controversy should arise under the Contract, such claim or controversy shall be made in writing to the other party within thirty (30) days after the first occurrence of the event. Prior to the institution of any action in court, the claim or controversy (together with supporting data) shall be presented in writing to the Director of the Capital Project Management Division at the University of Kentucky ("Director") or his designee. The Director, or designee, is authorized, subject to any limitations or conditions imposed by regulations, to settle, comprise, pay, or otherwise adjust the claim or controversy with the Construction Manager. The Director, or designee, shall promptly issue a decision in writing. A copy of the decision shall be mailed or otherwise furnished to the Construction Manager. The decision rendered shall be final and conclusive unless the Construction Manager files suit pursuant to KRS 45A.245. If the Director, or designee, does not issue a written decision within one hundred and twenty (120) days after written request for a final decision, or within a longer period as may be established by the parties to the Contract in writing, then the Construction Manager may proceed as if an adverse decision had been received.

39.2 Any legal action on the Contract shall be brought in the Franklin Circuit Court and shall be tried by the Court sitting without a jury. All defenses in law or equity, except the defense of government immunity, shall be preserved to the Owner. The Owner shall recover from the Construction Manager all attorney's fees, costs and expenses incurred to the extent the Owner prevails in defending or prosecuting each claim in litigation of disputes under the Contract. The Owner is the prevailing party under this provision and is entitled to recover attorneys' fees, costs and expenses on a claim-by-claim basis to the extent the Owner successfully defeats or prosecutes each claim. A recovery of a net judgment by the Construction Manager shall not be determinative of the Owner's right to recover attorneys' fees, expenses and costs. Rather, such a determination shall be made based on the extent that the Owner successfully defends or prosecutes each distinct claim in litigation under the Contract, even if the Owner does not prevail on every claim. The Construction Manager shall be liable to the Owner for all attorney's fees, costs and expenses incurred by the Owner to enforce the provisions of the Contract.

ARTICLE 40 - LIENS

40.1 The filing and perfection of liens for labor, materials, supplies, and rental equipment supplied on the Work are governed by KRS 376.195 et seq.

40.2 Statements of lien shall be filed with the Fayette County Clerk and any action to enforce the same must be instituted in the Fayette Circuit Court, pursuant to KRS 376.250 (5).

40.3 The lien shall attach only to any unpaid balance due the Construction Manager for the improvement from the time a copy of statement of lien, attested by the Fayette County Clerk, is delivered to the Owner, pursuant to the provisions of KRS 376.240.

ARTICLE 41 - ASSIGNMENT

41.1 Neither party to the Contract shall assign the Contract, or any portion thereof without the prior written consent of the other, which consent may be granted or withheld in the granting party's

sole and absolute discretion. The Construction Manager shall not assign any amount or part of the Contract or any of the funds to be received under the Contract unless the Construction Manager has the prior written approval of the Owner (which approval may be granted or withheld in the Owner's sole and absolute discretion) and the Surety on the Construction Manager's bond has given written consent to any such assignment.

ARTICLE 42 - SEPARATE CONTRACTS

42.1 The Owner reserves the right to enter into other Contracts in connection with the Project or to perform any work with the Owner's forces in the normal sequence of the work as depicted in the then current construction schedule. Except for work performed by University personnel, such contracts shall be assignable to the Construction Manager and shall contain the same terms and conditions as the contracts between the Construction Manager and the Sub-contractors. The Construction Manager will be entitled to a maximum of three percent (3%) overhead and profit on the value of such assigned contracts. The Construction Manager shall afford other contractors reasonable opportunity for the introduction and storage of their materials and the execution of their work and shall properly connect and coordinate its Work with theirs in such manner as the Consultant may direct.

42.2 Should the Construction Manager cause damage to any separate contractor on the Work, and the separate contractor sues the Owner on account of any damage alleged to have been so sustained, the Construction Manager shall be responsible for all costs, attorney's fees and expenses incurred by the Owner for defending such proceedings unless the Owner prevails on behalf of the Construction Manager in which case fees and expenses will be the responsibility of the separate contractor and if any judgment against the Owner arises therefrom, the Construction Manager shall pay or satisfy it and shall pay all costs, attorney's fees and expenses incurred by the Owner.

42.3 If any part of the Construction Manager's Work depends upon the work of any other separate contractor, the Construction Manager shall promptly report to the Consultant any observed defects in such work that render it unsuitable for proper execution connection. The failure to inspect and report shall constitute an acceptance of the other contractor's work as fit and proper for the reception of the work, except as to defects which may develop in the other contractor's work after the execution of the work.

42.4 Whenever work being done by the Owner's forces or by other contractors is contiguous to work covered by this Contract, the respective rights of the various parties involved shall be established by the Owner to secure the completion of the various portions of the Work in general harmony.

ARTICLE 43 - CONSTRUCTION MANAGER/SUB-CONTRACTOR RELATIONSHIP

43.1 The Construction Manager is fully responsible to the Owner for the acts and omissions of the Sub-contractors and of persons either directly or indirectly employed by them. The Construction Manager is responsible for the acts and omissions of persons employed directly by the Construction Manager and for the coordination of the Work, including placement and fittings of the various component parts. No claims for extra costs as a result of the failure to coordinate the Work, or by acts or omissions of the various Sub-contractors, will be paid by the Owner.

43.2 Except as otherwise provided in these Contract Documents, the Construction Manager agrees to bind every Sub-contractor by the terms and conditions of the Contract Documents as far as applicable to their portion of the Work. Upon request, the Construction Manager shall provide copies of any subcontracts and purchase orders to the Owner or Consultant.

43.3 The Construction Manager shall make no substitution or change in any Sub-contractor listed and accepted by the Consultant or Owner except as approved in writing by the Owner. The Construction Manager shall not employ any Sub-contractor or supplier against whom the Owner or the Consultant has made reasonable and timely objection. The Construction Manager (CM) will not be allowed to self-perform work or bid on any of the proposed work categories unless a subcontractor fails to perform and upon prior approval by the Universities authorized representatives."

43.4 Nothing contained in the Contract Documents shall create any contractual relationship between the Owner and any Sub-contractor, Trade Contractor or Supplier, nor shall the Construction Manager include any language in their contracts with any Sub-contractor, Trade Contractor and/or Supplier that might Imply such a relationship. The Construction Manager is hereby notified that it is the Construction Manager's contractual obligation to settle disputes between Sub-contractors, Trade Contractors, and/or Suppliers. Neither the Owner nor the Consultant will settle disputes between the Construction Manager and any Sub-contractor, Trade Contractor, and/or Supplier or between Sub-contractors, Trade Contractors, and/or Suppliers.

43.4.1 The Owner does not waive sovereign immunity under KRS 45A.245(1) for any claim or claims made by parties not having a written contract with the University of Kentucky.

43.4.2 Third party and/or flow-through type claims, from Sub-contractors and/or suppliers or any other entity not having a written contract directly with the University, are specifically prohibited by this Contract and no provision of the Construction Manager's contracts with such entities shall indicate otherwise.

43.4.3 The Construction Manager shall indemnify and hold harmless the Owner and its agents and employees from any claims relating to the Project brought against the Owner by any of the Construction Manager's Sub-contractors or suppliers, or between their sub-contractors or suppliers.

ARTICLE 44 - CASH ALLOWANCE

44.1 The Construction Manager is to provide or require the Sub-contractor(s) to include in the Contract Amount all costs necessary to complete the Work. Costs based on "allowances" shall be permitted only for objectively quantifiable material items and only with the prior written approval of the Owner.

ARTICLE 45 - PROJECT SITE LIMITS

45.1 The Construction Manager shall confine the apparatus, the storage of materials, and the operations of Workmen to Project site limits indicated in the Contract Documents and as permitted by law, ordinances, and permits, and shall not unreasonably encumber the site with materials and equipment.

ARTICLE 46 - CLEAN UP

46.1 The Construction Manager shall at all times keep the premises free from accumulation of waste material or rubbish caused by the operations in connection with the Work. All corridors and exit doors must be kept clear at all times. All exit ways, walks, and drives must be kept free of debris, materials, tools and vehicles.

46.2 At the completion of the Work, and prior to final inspection and acceptance, the Construction Manager shall remove all remaining waste materials, rubbish, Construction Manager's construction equipment, tools, machinery, and surplus materials and shall leave the Work in a clean and usable

condition, satisfactory to the Consultant and the Owner. If the Construction Manager fails to clean up as provided in the Contract Documents, the Owner may perform the cleaning tasks and charge the cost to the Construction Manager.

ARTICLE 47 - POINTS OF REFERENCE

47.1 The Construction Manager shall carefully preserve bench marks, reference points and stakes, and in case of willful or careless destruction, the Construction Manager shall be charged with the resulting expense of replacement and shall be responsible for any mistake that may be caused by their loss or disturbance.

ARTICLE 48 - SUBSTITUTION - MATERIALS AND EQUIPMENT

48.1 Reference to or the listing of items to be incorporated in the construction without referring to any specific article, device, equipment, product, material, fixture, patented process, form, method or type of construction, or by name, make, trade name, or catalog number shall be interpreted as establishing the general intent of the Contract and the general standard of quality for that item.

48.2 Specific references in the Contract Documents to any article, device, equipment, product, material, fixture, patented process, form, method or type of construction, or by name, make, trade name, or catalog number, with the words "or equal", shall be interpreted as establishing a minimum standard of quality, and shall not be construed as limiting competition.

48.2.1 Substitution of other equipment and materials as “or equal” to items named in the specifications will be allowed provided the proposed substitution is approved by the Consultant and will perform the functions called for by the general design, be similar and of equal quality to that specified and be suited to the same use and capable of performing the same function of that specified. The Construction Manager has the burden to prove equality of any substitution requested.

48.3 Specific references in the Contract Documents to any article, device, equipment, product, material, fixture, patented process, form, method or type of construction, or by name, make, trade name, or catalog number, without the words “or equal”, shall be interpreted as defining an item or source that has after careful consideration been determined by the University as necessary to be compliant with, and/or to function properly within, the University operational system. No substitutions will be allowed.

48.3.1 In the event the Contract Documents contain specific reference to two or more items as described in Article 48.3, any of those listed will be acceptable.

48.4 Substitution of equipment and materials previously submitted by the Construction Manager and approved by the Consultant will be considered only for the following reasons:

48.4.1 Unavailability of the materials or equipment due to conditions beyond the control of the supplier.

48.4.2 Inability of the supplier to meet Contract Schedule.

48.4.3 Technical noncompliance to specifications.

48.5 In substituting materials or equipment, the Construction Manager assumes responsibility for any changes in systems or modifications required in adjacent or related work to accommodate such substitutions, despite consultant approval, and all costs associated with the substitution shall be the

responsibility of the Construction Manager. The Consultant shall be reimbursed by the Construction Manager for any architectural or engineering revisions required as the result of such substitutions.

48.6 Inclusion of a certain make or type of materials or equipment in the Construction Manager's bid proposal shall not obligate the Owner to accept such materials or equipment if they do not meet the requirements of the Contract Documents and any such substitutions in the preparation of the bid without written approval shall be at the sole risk of the Construction Manager.

ARTICLE 49 - TEST AND INSPECTION

49.1 Regulatory agencies of the government having jurisdiction may require any Work to be inspected, tested or approved. The Construction Manager shall assume full responsibility therefore, pay all costs in connection therewith, unless otherwise noted, and furnish the Consultant the required certificates of inspection, testing or approval.

49.2 The Construction Manager shall give the Consultant timely notice of readiness of the Work for all inspections, tests or approvals.

49.3 The technical specifications may indicate specific testing requirements to be performed by the Construction Manager. Unless otherwise provided in the Contract Documents, the cost of all such testing shall be the responsibility of the Construction Manager. Testing shall be completed using a testing facility or laboratory approved by the Owner.

49.4 The costs of all inspection fees as may be required to construct and occupy the Work shall be the responsibility of the Construction Manager.

ARTICLE 50 - WARRANTY

50.1 The Construction Manager warrants to the Owner and the Consultant that all materials and equipment furnished under this Contract shall be new and in accordance with the requirements of the Contract Documents, and that all Work shall be of good quality, free from faults and defects and in conformance with the Contract Documents. If required by the Consultant or the Owner, the Construction Manager shall furnish satisfactory evidence as to the kind and quality of materials and equipment. If the Construction Manager requests approval of a substitution of material or equipment, the Construction Manager warrants that such installation, construction, material, or equipment will equally perform the function for which the original material or equipment was specified. The Construction Manager explicitly warrants the merchantability, the fitness for a particular purpose, and quality of all substituted items in addition to any warranty given by the manufacturer and/or supplier. Approval of any such substitution is understood to rely on such warrant of performance. Prior to the Substantial Completion inspection, the Construction Manager shall deliver to the Consultant all warranties and operating instructions required under the Contract or to which the Construction Manager is entitled from manufacturers, suppliers, and Sub-contractors. All warranties for products and materials incorporated into the Work shall begin on the date of Substantial Completion. The warranty provided in this Article 50 shall be in addition to and not a limitation of any other warranty or remedy required by law or by the Contract Documents, and such warranty shall be interpreted to require the Construction Manager to replace defective material and equipment and re-execute defective Work which is disclosed to the Construction Manager by or on behalf of the Owner within a period of one (1) year after Substantial Completion of the entire Work in addition to other warranty obligations beyond one year from Substantial Completion as provided for by law or by the Contract Documents.

50.2 Neither the final payment, any provision in the Contract Documents nor partial or entire use or occupancy of the premises by the Owner shall constitute an acceptance of Work not done in accordance with Contract Documents or relieve the Construction Manager or its Sureties of liability with respect to any warranties or responsibilities for faulty materials and workmanship. The Construction Manager or its sureties shall remedy any defects in Work and any resulting damage to Work at the Construction Manager's own expense. The Construction Manager shall be liable for correction of all damage resulting from defective Work. If the Construction Manager fails to remedy any defects or damage, the Owner may correct Work or repair damages and the cost and expense incurred in such event shall be paid by or be recoverable from the Construction Manager or the surety. The Owner will give notice of observed defects with reasonable promptness.

50.3 The Construction Manager shall guarantee that labor, material, and equipment will be free of defects for a period of one (1) year from the date shown on the Certificate of Substantial Completion unless special conditions or additional warranty periods are required by the contract pursuant to Article 23 in addition to warranty obligations which extend beyond one year from Substantial Completion. The Owner will give notice of observed defects with reasonable promptness. Expendable items and wear from ordinary use are excluded from this warranty.

50.4 Should the Construction Manager be required to perform tests that must be delayed due to climate conditions, it is understood that such tests will be accomplished by the Construction Manager at the earliest possible date with provisions of the general warranty beginning upon satisfactory completion of said test. The responsibility of the Construction Manager under this Article will not be abrogated if the Owner should elect to initiate final payment. If the Owner initiates final payment, consent of Construction Manager's surety acknowledging that Work not yet tested is required. The Construction Manager shall warrant that the entire Project will conform to the Contract Documents.

50.5 In addition to the foregoing, the Construction Manager shall warrant for a period of one (1) year that all buildings and other improvements constructed as a part of the Work shall be watertight and leak proof at every point and in every area. The Construction Manager shall, immediately upon notification by or on behalf of the Owner of water penetration, determine the source of water penetration and, at the Construction Manager's expense, (a) do any work necessary to make such buildings or improvements watertight and (b) repair and replace any other damaged material, finishes and furnishings damaged as a result of such water penetration and return the buildings or other improvements to their original condition.

50.6 The Construction Manager shall address and resolve to the Owner's satisfaction any warranty claims made by or on behalf of the Owner during the above described warranty period and all repairs and replacements made by the Construction Manager pursuant to this Article 50 shall be warranted by the Construction Manager, on the terms set forth in this Article 50, for a period of time commencing upon the completion of such repairs and replacements and ending on the later of (a) the expiration of the one (1) year warranty period provided for above or (b) six (6) months after the date such repair or replacement is completed.

50.7 All costs, attorney's fees and expenses incurred by the Owner as a result of the Construction Manager's failure to honor any warranty for the Work shall be paid by or recoverable from the Construction Manager.

ARTICLE 51 - PREVAILING WAGE LAW REQUIREMENTS (NO LONGER USED AS OF 1/9/17)

ARTICLE 52 - APPRENTICES

52.1 Apprentices (for all classifications of work) shall be permitted to work only under an apprenticeship agreement approved by the Kentucky Supervisor of Apprenticeship and by the Kentucky Apprenticeship and Training, United States Department of Labor.

ARTICLE 53 - GOVERNING LAW

53.1 This Contract and all issues and disputes arising out of this Contract shall be governed by, construed and enforced in accordance with the laws of the Commonwealth of Kentucky without consideration of its conflicts of laws principles.

ARTICLE 54 - NONDISCRIMINATION IN EMPLOYMENT

54.1 During the performance of the Contract, the Construction Manager agrees as follows:

54.1.1 The Construction Manager will not discriminate against any employee or applicant for employment because of race, color, religion, sex, age, national origin, or disability in employment. The Construction Manager will take affirmative action to ensure that applicants are employed, and that employees are treated during employment without regard to their race, color, religion, sex, age, national origin, or disability in employment. Such action shall include, but not be limited to the following: employment, upgrading, demotion or transfer, recruitment or recruitment advertising, layoff or termination, rates of pay or other forms of compensation, and selection for training, including apprenticeship. The Construction Manager agrees to post in conspicuous places available to employees and applicants for employment, notices to be provided setting forth the provisions of this nondiscrimination clause.

54.1.2 The Construction Manager will, in all solicitations or advertisements for employees placed by or on behalf of the Construction Manager; state that all qualified applicants will receive consideration for employment without regard to race, color, religion, sex, age, national origin or disability in employment.

54.1.3 The Construction Manager will send to each labor union or representatives of workers with which it has a collective bargaining agreement or other contract or understanding, a notice advising the said labor union or workers' representatives of the Construction Manager's commitments under this Article, and shall post copies of the notice in conspicuous places available to employees and applicants for employment.

54.2 Failure to comply with the above nondiscrimination clause constitutes a material breach of Contract.

ARTICLE 55 - AFFIRMATIVE ACTION; REPORTING REQUIREMENTS

55.1 The Construction Manager and any Sub-contractor is exempt from any affirmative action or reporting requirements, under the Kentucky Equal Employment Opportunity Act of 1978, KRS 45.550 to KRS 45.640 “The Act", if any of the following conditions are applicable:

55.1.1 The Trade Contract awarded is in the amount of two hundred and fifty thousand dollars ($250,000.00) or less, and the amount of the Trade Contract is not a subterfuge to avoid compliance with the provisions of the Act;

55.1.2 The Construction Manager or Sub-contractor utilizes the services of fewer than eight (8) employees during the course of the Contract;

55.1.3 The Construction Manager or Sub-contractor employs only family members or relatives;

55.1.4 The Construction Manager or Sub-contractor employs only persons having a direct ownership interest in the business and such interest is not a subterfuge to avoid compliance with the provisions of The Act.

55.2 The Construction Manager and any Sub-contractor, not otherwise exempted, shall:

55.2.1 For the length of the Contract, hire DBE's from within the drawing area to satisfy the agreed upon goals and timetables. Should the union with which the General Contractor or Sub-contractor have collective bargaining agreements be unwilling to provide sufficient DBE's to satisfy the agreed upon goals and timetables, the General Contractor and Sub-contractors shall hire DBE's from other sources within the drawing area.

Diverse Business Enterprises (DBE) consist of minority, women, disabled, veteran and disabled veteran owned business firms that are at least fifty-one percent owned and operated by an individual(s) of the aforementioned categories. Also included in this category are disabled business enterprises and non-profit work centers for the blind and severely disabled. MBE, WBE, Veterans, Disabled Veterans and Disabled make up Diverse Business Enterprises (DBE)

55.2.2 The equal employment provisions of The Act may be met in part by the Construction Manager contracting to a DBE contractor or Sub-contractor. A DBE contractor, or Sub-contractor shall mean a business established under the definition of a DBE in Article 55.2.1

55.2.3 The Construction Manager shall, for the length of the Contract, furnish such information as required by The Act and by such rules, regulations and orders issued pursuant thereto and will permit access by the contracting agency and the department to all books and records pertaining to its employment practices and Work sites for purposes of investigation to ascertain compliance with The Act and such rules, regulations and orders issued pursuant thereto.

55.3 If the Construction Manager is found to have committed an unlawful practice against a provision of The Act during the course of performing under this Contract, a Trade Contract or a subcontract covered under The Act, the Owner may cancel or terminate the Contract, conditioned upon a program for future compliance approved by the Owner. The Owner may also declare such Construction Manager ineligible to submit proposals on further contracts until such time as the Construction Manager complies in full with the requirements of The Act.

55.4 Any provisions of The Act notwithstanding, the Construction Manager shall not be required to terminate an existing employee, upon proof that employee was employed prior to the date of the Contract, nor to hire anyone who fails to demonstrate the minimum skills required to perform a particular job.

END OF DOCUMENT

A F F I D A V I T

Comes the affiant and after having been duly sworn states as follows:

1. That affiant is the contractor awarded a contract by the University of Kentucky on **Project# 2584.0 / UK-2290-23 Indoor Track Pre-Engineered Metal Building.**

2. That all contractors and subcontractors employed, or that will be employed, under the provisions of this contract are in compliance with Kentucky requirements for Workers' Compensation Insurance according to KRS Chapter 342 and Unemployment Insurance according to KRS Chapter 341.

Further, the affiant sayeth naught.

By: _____

Title: _____

Contractor: _____

State of_____)

County of_____)

Subscribed and sworn to before me by _____on this _____

day of _____, 2022.

My commission expires _____

_____
Notary Public, State at Large

UNIVERSITY OF KENTUCKY
CAPITAL CONSTRUCTION PROCUREMENT SECTION

PAYMENT BOND

Bond Number: [NUMBER]

KNOW ALL PERSONS BY THESE PRESENTS:

WHEREAS, the University of Kentucky (the "Owner") and [CONTRACTOR'S NAME] (the "Principal") have entered into a contract for the construction of Project# 2584.0 / UK-2290-23 Indoor Track Pre-Engineered Metal Building (the "Project"), with the contract price or amount of $[AMOUNT].

WHEREAS, the Principal is required to furnish a payment bond for the protection of all persons performing, supplying, or furnishing labor, materials, equipment, or supplies to the contractor or its subcontractors for the performance of the work provided for in the contract, including security for payment of all unemployment contributions which become due and payable under Kentucky unemployment insurance law, in an amount equal to one hundred percent (100%) of the original contract price or amount, executed by a surety company authorized to do business in the Commonwealth of Kentucky, and satisfactory to the Commonwealth; and

WHEREAS, [SURETY'S NAME] (the "Surety"), a surety company authorized to do business in the Commonwealth of Kentucky, has agreed to issue such bond.

NOW, THEREFORE, for the value received and intending to be legally bound hereby, the Principal and Surety agree to the following terms and conditions of this obligation:

1. **Recitations:** The recitals above are true and substantive parts of this instrument.

2. **Definitions:** The following terms are defined for the purposes of this instrument:

(a) **Bond** means this instrument and the terms and conditions of the Contract (as defined herein), both express and implied, which are incorporated herein by reference and constitute a part of this instrument to the same extent and effect as though copied verbatim herein, and are legally binding on the Principal and Surety including the obligations of the Surety provided therein.

(b) **Claimants** means all persons having just and lawful claims for (i) labor, materials, services, insurance, supplies, machinery, equipment, rentals, fuels, oils, implements, tools, appliances, and any other items of whatever nature, furnished for, used or consumed in the prosecution of the work called for by the Contract, whether lienable or non-lienable and whether or not permanently incorporated in said work; (ii) pension, welfare, vacation, and other supplemental employee benefit contributions payable under collective bargaining agreements with respect to persons employed upon said work; and (iii) federal, state, and local taxes and contributions required by law to be withheld and paid with respect to the employment of persons upon said work.

(c) **Contract** means that certain agreement dated [DATE] for the construction of Project# 2584.0 / UK-2290-23 Indoor Track Pre-Engineered Metal Building (the "Project"),all documents that comprise the agreement, any documents incorporated therein by reference, and any Contract Changes (as defined herein).

(d) **Contract Change** means any change order, change of time, extension of time, amendment, modification, addition, or other alteration, material or otherwise, to the Contract, the contract price or amount, the work to be performed under the Contract, or the specifications accompanying same.

3. **Guaranty:** The Principal and Surety, jointly and severally, bind themselves, their heirs, executors, administrators, successors, and assigns to the Owner, as obligee of the Bond, to pay all Claimants having just and lawful claims (as defined above). The Principal and Surety likewise guarantee the faithful payment of the prevailing hourly wage as set forth in the schedule incorporated into the bid documents unless the Project is exempt from the prevailing wage requirements of KRS 337.505 through 337.550.

4. **Bond Amount:** The bond amount is $[AMOUNT]. This amount shall be increased automatically by Contract Changes to the contract price or amount and shall not limit the Surety's obligation or liability under the Bond for paying attorney fees, costs, or other legal expenses incurred by the Owner, which may be in excess of the bond amount as increased.

5. **Defeasance:** Except as provided by the Contract, the Principal and Surety shall have no obligations under the Bond if the Principal during the original term of the Contract, any extensions thereof which may be granted by the Owner with or without notice to the Surety, the guaranty period, the warranty period, and other periods limited only by statutes of limitation (a) promptly pays all Claimants; (b) satisfies all claims and demands incurred under the Contract; and (c) fully indemnifies and saves harmless the Owner from all costs, damages, attorney fees, consultant fees, and other expenses that it may suffer by reason of the Principal's failure to do so. The Bond will otherwise remain in full force and effect.

6. **Amendment:** The Bond, including without limitation the Bond Amount, will be deemed amended, automatically and immediately without separate or written amendments hereto, upon any Contract Changes. The Principal and Surety agree to be bound by any Contract Changes. The Surety waives notice of any Contract Changes.

7. **Interpretation:** The Bond will be interpreted and enforced in accordance with Kentucky law. The Principal and Surety agree that they have taken part in drafting the Bond, which will not be construed against or in favor of any other party on the basis of drafting. To the extent that this instrument contradicts the Contract, the Contract will control.

8. **Beneficiaries:** The Principal and Surety agree that (a) the Bond will insure to the benefit of the Owner and all Claimants having just and lawful claims (as defined above) (collectively the "Beneficiaries"), whether or not they have any direct contractual relationship with the Principal; (b) the Beneficiaries may maintain independent actions upon this Bond in their own names; and (c) no final settlement between the Owner and Principal will abridge the right of other Beneficiaries with unsatisfied claims.

IN WITNESS WHEREOF, the Principal and Surety, by their duly authorized representatives, have executed this instrument, which is effective as of [DATE].

ATTEST: WITNESSES:	PRINCIPAL
Witness as to PRINCIPAL	By
Witness as to PRINCIPAL	Title
ATTEST: WITNESSES:	SURETY
Witness as to SURETY	By
Witness as to SURETY	Attorney-in-Fact

UNIVERSITY OF KENTUCKY
CAPITAL CONSTRUCTION PROCUREMENT SECTION

PERFORMANCE BOND

Bond Number: _____

KNOW ALL PERSONS BY THESE PRESENTS:

WHEREAS, the University of Kentucky (the "Owner") and [CONTRACTOR'S NAME] (the "Principal") have entered into a contract for the construction of Project# 2584.0 / UK-2290-23 Indoor Track Pre-Engineered Metal Building (the "Project"), with the contract price or amount of $[AMOUNT].

WHEREAS, the Principal is required to furnish a performance bond for the faithful performance of the contract in an amount equal to one hundred percent (100%) of the contract price or amount as it may be increased, executed by a surety company authorized to do business in the Commonwealth of Kentucky, and satisfactory to the Commonwealth; and

WHEREAS, [SURETY'S NAME] (the "Surety"), a surety company authorized to do business in the Commonwealth of Kentucky, has agreed to issue such bond.

NOW, THEREFORE, for the value received and intending to be legally bound hereby, the Principal and Surety agree to the following terms and conditions of this obligation:

1. **Recitations:** The recitals above are true and substantive parts of this instrument.

2. **Definitions:** The following terms are defined for the purposes of this instrument:

(a) **Bond** means this instrument and the terms and conditions of the Contract (as defined herein), both express and implied, which are incorporated herein by reference and constitute a part of this instrument to the same extent and effect as though copied verbatim herein, and are legally binding on the Principal and Surety including the obligations of the Surety provided therein.

(b) **Contract** means that certain agreement dated [DATE] for the construction of Project# 2584.0 / UK-2290-23 Indoor Track Pre-Engineered Metal Building (the "Project"), all documents that comprise the agreement, any documents incorporated therein by reference, and any Contract Changes (as defined herein).

(c) **Contract Change** means any change order, change of time, extensions of time, amendment, modification, addition, or other alteration, material or otherwise, to the Contract, the contract price or amount, the work to be performed under the Contract, or the specifications accompanying same.

3. **Guaranty:** The Principal and Surety, jointly and severally, bind themselves, their heirs, executors, administrators, successors, and assigns to the Owner, as obligee of the Bond, for the full and faithful performance of the Contract and any Contract Changes. The Principal and Surety likewise guarantee the faithful performance of the prevailing hourly wage as set forth in the schedule incorporated into the bid documents unless the Project is exempt from the prevailing wage requirements of KRS 337.505 through 337.550.

4. **Bond Amount:** The bond amount is $[AMOUNT]. This amount shall be increased automatically by Contract Changes to the contract price or amount and shall not limit the Surety's obligation or liability under the Bond for paying attorney fees, costs, or other legal expenses incurred by the Owner, which may be in excess of the bond amount as increased.

5. **Defeasance:** Except as provided by the Contract, the Principal and Surety shall have no obligations under the Bond if the Principal during the original term thereof, any extensions thereof which may be granted by the Owner with or without notice to the Surety, the guaranty period, the warranty period, and other periods limited only by statutes of limitation (a) well, truly, and faithfully performs its duties to the Owner; (b) performs the Contract; (c) satisfies all claims and demands incurred under the Contract; (d) fully indemnifies and saves harmless the Owner from all costs, damages, attorney fees, consultant fees, and other expenses that it may suffer by reason of the Principal's failure to do so; and (e) reimburses and repays the Owner all such expenses and outlay, without limitation, which the Owner may incur in making good any default. The Bond will otherwise remain in full force and effect.

6. **Amendment:** The Bond, including without limitation the Bond Amount, will be deemed amended, automatically and immediately without separate or written amendments hereto, upon any Contract Changes. The Principal and Surety agree to be bound by any Contract Changes. The Surety waives notice of any Contract Changes.

7. **Interpretation:** The Bond will be interpreted and enforced in accordance with Kentucky law. The Principal and Surety agree that they have taken part in drafting the Bond, which will not be construed against or in favor of any other party on the basis of drafting. To the extent that this instrument contradicts the Contract, the Contract will control.

IN WITNESS WHEREOF, the Principal and Surety, by their duly authorized representatives, have executed this instrument, which is effective as of [DATE].

ATTEST: WITNESSES:	PRINCIPAL
Witness as to PRINCIPAL	By
Witness as to PRINCIPAL	Title
ATTEST: WITNESSES:	SURETY
Witness as to SURETY	By
Witness as to SURETY	Attorney-in-Fact

AGREEMENT BETWEEN
UNIVERSITY OF KENTUCKY
AND CONTRACTOR

THIS AGREEMENT, made the _____ day of _____ 2022 by and between _____ ("Contractor"), and the UNIVERSITY OF KENTUCKY, ("Owner"), is to bind the parties hereto to the principles and terms set forth herein, and shall be binding upon the parties hereto.

WITNESSETH, that the Contractor and Owner for the consideration hereinafter named, agree as follows:

ARTICLE No. 1 SCOPE OF WORK:

The scope of work of this Project consists of the supply, installation and warranting of all materials and products, including all labor, superintendence, equipment, temporary power, transportation, lighting, plant and tools related to the construction of the work as herein specified in this RFP and Attachments.

PROJECT: #2584.0 Indoor Track Pre-Engineered Metal Building

The Scope of Work consists of the Invitation for Bid, UK-2290-23, dated September 20, 2022; the Contractor's Proposal dated October 7, 2022, including Addendums 1,2,3 etc, the General Conditions, the Special Conditions, the Contractor's Bonds and Insurance and Affidavit, the Specifications, the Drawings including Supplemental Drawings and Change Orders issued after execution of the Contract for the Work described in Article No. 1 of this Agreement, all of which are incorporated in and made a part thereof of reference, and which shall be binding upon the Contractor and Owner.

The Specifications and Drawings for this Work include the following:

Specifications:

On Plan Sheets as required

Drawing Index:

STRUCTURAL
S-101 PEMB GENERAL NOTES & ISOMETRIC VIEWS

GENERAL
G-001 COVER SHEET
G-101 INFORMATION DRAWING
G-102 LOCATIONS AND LAYOUT RULES
G-103 LIFE SAFETY PLAN

CIVIL
C-101 SITE LAYOUT PLAN
C-201 GRADING AND DRAINAGE PLAN
C-202 DRAINAGE DETAILS
C-301 SITE DETAILS
C-302 EROSION CONTROL DETAILS
C-401 LANDSCAPE PLAN

STRUCTURAL
S-102 GENERAL NOTES
S-103 SPECIAL INSPECTIONS
S-104 ISOMETRIC VIEWS
S-203 OVERALL FOUNDATION PLAN
S-204 FOUNDATION PLAN AREA A
S-205 FOUNDATION PLAN AREA B
S-206 ROOF FRAMING PLAN
S-301 TYPICAL FOUNDATION DETAILS
S-302 TYPICAL FOUNDATION DETAILS
S-303 FOUNDATION SECTIONS
S-401 TYPICAL FRAMING DETAILS
S-402 FRAMING SECTIONS
S-501 STEEL COLUMN SCHEDULE
S-601 TYPICAL COLD-FORMED STEEL DETAILS
S-602 TYPICAL COLD-FORMED STEEL DETAILS

ARCHITECTURAL
A-101 OVERALL FLOOR PLAN
A-101A HIGH WINDOWS FLOOR PLAN
A-102 FIRST FLOOR PLAN CALLOUTS - AREA A
A-103 FIRST FLOOR PLAN CALLOUTS - AREA B
A-121 FIRST FLOOR DIMENSION PLAN - AREA A
A-122 FIRST FLOOR DIMENSION PLAN - AREA B
A-131 FIRST FLOOR REFLECTED CEILING PLAN - AREA A
A-132 ENLARGED REFLECTED CEILING PLAN
A-141 FIRST FLOOR FINISH PLAN - AREA A
A-142 FIRST FLOOR FINISH PLAN - AREA B
A-181 ROOF PLAN
A-182 ROOF MISC PLANS & DETAILS

A-201 BUILDING ELEVATIONS
A-202 ENLARGED BUILDING ELEVATIONS
A-203 ENLARGED BUILDING ELEVATIONS
A-204 ENLARGED BUILDING ELEVATIONS
A-301 BUILDING SECTIONS
A-351 WALL SECTIONS (PEMB)
A-352 WALL SECTIONS (PEMB)
A-353 WALL SECTIONS (PEMB)
A-354 WALL SECTIONS (PEMB)

A-355 WALL SECTIONS (PEMB ALT)
A-356 WALL SECTIONS (PEMB EJ)
A-357 WALL SECTIONS (PEMB EJ)
A-358 WALL SECTIONS
A-359 WALL SECTIONS
A-401 ENLARGED FLOOR PLANS
A-411 INTERIOR ELEVATIONS
A-501 EXTERIOR ASSEMBLIES
A-511 PLAN DETAILS
A-521 FOUNDATION DETAILS
A-522 FOUNDATION DETAILS
A-532 ENLARGED SECTION DETAILS
A-533 ENLARGED SECTION DETAILS
A-541 ENLARGED PARAPET / ROOF DETAILS
A-542 ENLARGED PARAPET / ROOF DETAILS
A-561 CASEWORK DETAILS
A-601 DOOR SCHEDULE AND DETAILS
A-602 EXTERIOR FRAME TYPE ELEVATIONS
A-603 EXTERIOR & INTERIOR FRAME TYPE ELEVATIONS
A-611 HEAD DETAILS
A-612 HEAD DETAILS
A-613 JAMB DETAILS
A-614 JAMB & SILL DETAILS
A-621 ROOM FINISH SCHEDULE
A-631 SIGNAGE SCHEDULE
A-701 PARTITION TYPE SCHEDULE AND DETAILS
A-702 TYPICAL PARTITION DETAILS
A-703 TYPICAL PARTITION DETAILS

TRACK AND FIELD
TF-101 LAYOUT PLAN
TF-102 DIMENSION PLAN
TF-103 DRAFT UTILITIES
TF-104 T&F DETAILS
TF-105 T&F DETAILS

SITE UTILITIES
EU-101 ELECTRICAL SITE UTILITY PLAN
MU-101 MECHANICAL SITE UTILITY PLAN

FIRE PROTECTION
FP-101 FIRE SUPPRESSION LEGEND
FP-201 OVERALL FIRE PROTECTION PLAN

PLUMBING
P-101 PLUMBING LEGEND
P-201 OVERALL PLUMBING PLAN
P-202 ENLARGED PLUMBING PLANS
P-401 PLUMBING SCHEDULES AND DETAILS

MECHANICAL
M-101 MECHANICAL LEGEND
M-201 MECHANICAL PLAN
M-202 ENLARGED ENTRANCE MECHANICAL PLAN
M-301 MECHANICAL PIPING PLAN
M-302 ENLARGED MECHANICAL ROOMS
M-401 MECHANICAL CONTROLS
M-501 MECHANICAL SCHEDULES AND DETAILS

ELECTRICAL
E-101 ELECTRICAL LEGEND
E-201 FIRST FLOOR LIGHTING PLAN - AREA A
E-202 FIRST FLOOR LIGHTING PLAN - AREA B
E-203 FIRST FLOOR LIGHTING PLAN - AREA C
E-204 FIRST FLOOR LIGHTING PLAN - AREA D
E-205 LOWER ROOF LIGHTING PLAN
E-301 FIRST FLOOR POWER PLAN - AREA A
E-302 FIRST FLOOR POWER PLAN - AREA B
E-303 FIRST FLOOR POWER PLAN - AREA C
E-304 FIRST FLOOR POWER PLAN - AREA D
E-401 FIRST FLOOR SYSTEMS PLAN - AREA A
E-402 FIRST FLOOR SYSTEMS PLAN - AREA B
E-403 FIRST FLOOR SYSTEMS PLAN - AREA C
E-404 FIRST FLOOR SYSTEMS PLAN - AREA D
E-501 ONE-LINE DIAGRAM
E-601 LIGHT FIXTURE SCHEDULE
E-701 ELECTRICAL DETAILS
E-702 ELECTRICAL DETAILS
E-703 ELECTRICAL DETAILS
E-704 ELECTRICAL DETAILS

ARTICLE No. 2 TIME OF COMPLETION:

The Contractor must begin Work specified by the written Work Order from the Owner. Substantial Completion shall be one hundred ninety-eight (198) consecutive calendar days after the stipulated commencement date with Final Completion being thirty (30) consecutive calendar days after the date of Substantial Completion.

ARTICLE No. 3 LIQUIDATED DAMAGES:

It is mutually understood and agreed by and between the parties hereto that time is of the essence in the performance of this contract and that the Owner, the University of Kentucky, will sustain substantial monetary and other damages in the event of a failure or delay by the Contractor in the completion of the Work. It is further understood and agreed upon and made part of this Contract that the Work must be begun, performed, and completed without delay by the Contractor and if the Contractor fails to begin, perform without interruption, and complete said Work in due and proper time, the Contractor may be declared in default of this Agreement. If the Work is not substantially complete within the time required in Article No. 2 of this Agreement, the Contractor shall pay to the Owner, as liquidated damages for delay and not as a penalty, the sum of **four hundred and twenty-five dollars ($425.00)** for each and every day after the date of Substantial Completion until the date of actual Substantial Completion.

If the Work is not finally completed within the time required in the preceding Article No. 2 of this Agreement, the Contractor shall pay to the Owner, as liquidated damages for delay and not as a penalty, the sum of **four hundred and twenty-five dollars ($425.00)** for each and every day after the date of Final Completion until the date of actual Final Completion. In no event shall liquidated damages for delay in Final Completion be due before the date required for Final Completion in Article No. 2 of this Agreement.
This provision for liquidated damages is intended to compensate the Owner for delay only and shall not preclude the Owner from making claims for other damages.

If the Work is not commenced by the Contractor at the time specified in Article No. 2 of this Agreement, then the Contractor and its surety or sureties shall be liable for and pay to the Owner all damages sustained by reason of such failure or breach of contract and the Owner may immediately relet the Work.

ARTICLE No. 4 THE CONTRACT AMOUNT:

Subject to additions and deductions for Change Orders made in accordance with the Contract Documents, the Owner shall pay the Contractor as full consideration for the Contractor's satisfactory performance of the Contract obligations the sum of _____ _____ Dollars ($_____).

ARTICLE No. 5 SPECIAL NOTICE:

The Contractor hereby certifies that it is fully informed of the conditions relating to construction and labor under which the Work under this Agreement is to be performed, and agrees that it shall employ, methods and means in carrying out the Work so as not to interfere with or interrupt the Work of any other Contractor working on/or adjacent to the site for this Work.

IN WITNESS WHEREOF this Agreement is executed in two (2) counterparts, each one of which shall be deemed an original and adequate proof of this Agreement, on the date and year first herein before written.

CONTRACTOR:_____
Company Name

WITNESS:

_____

BY:_____

Title:_____

Approved for Legality and Form

APPROVED:_____

Recommended By:

_____
Kevin Locke
AVP Capital Planning, Design & Construction

UNIVERSITY OF KENTUCKY

By:_____
Eric Monday
Executive Vice President for Finance and Administration

UNIVERSITY OF KENTUCKY

DBE Participation Goals

PART 1 - GENERAL

1.1 The University of Kentucky requests all potential contractors to make a concerted effort to include Diverse Business Enterprises (DBE's) as subcontractors or suppliers in their bids.

1.2 Toward that end, the University of Kentucky has established 10% of total procurement costs as a Goal for participation of Diverse Business Enterprises on this contract.

1.3 **It is therefore a request of each Bidder to include in its bid, 10% for DBE participation and other requirements as outlined in this section.**

PART 2 - PROCEDURES

2.1 The successful bidder will be required to report to the University of Kentucky, the dollar amounts of all purchase orders submitted to DBE subcontractors and suppliers for work done or materials purchased for this contract.

2.2 Replacement of a DBE subcontractor or supplier listed in the original submittal must be requested in writing and must be accompanied by documentation of Good Faith Efforts to replace the subcontractor / supplier with another DBE Firm; subject to approval by the University of Kentucky.

2.3 For assistance in identifying qualified, certified businesses to solicit for potential contracting opportunities, bidders may contact:

A. The University of Kentucky, Facilities Management Contractor/Supply chain Coordinator (859-257-3204)

B. Tri-State Minority Supplier Development Council in Louisville, KY (502-625-0135)

C. The Kentucky Cabinet for Economic Development, Small & Minority Business Division in Frankfort, KY (502-564-2064)

D. The Office of Equal Employment Opportunity, Contract Compliance Division in Frankfort, KY (502-564-2874)

2.4 The University of Kentucky will make every effort to notify interested DBE subcontractors and suppliers of each Bid Package, including information on the scope of work, the pre-bid meeting time and location, the bid date, and all other pertinent information regarding the project.

PART 3 - DEFINITIONS

3.1 Diverse Business Enterprises (DBE) consist of minority, women, disabled, veteran and disabled veteran owned business firms that are at least fifty-one percent owned and operated by an individual(s) of the aforementioned categories. Also included in this category are disabled business enterprises and non-profit work centers for the blind and severely disabled. MBE, WBE, Veterans, Disable Veterans and Disabled make up Diverse Business Enterprises (DBE).

PART 4 - OBLIGATION OF BIDDER

4.1 **The bidder shall make a Good Faith Effort to achieve the Participation Goal for DBE subcontractors/suppliers. The failure to meet the goal shall not necessarily be cause for disqualification of the bidder; however, bidders not meeting the goal are required to furnish with their bids written documentation of their Good Faith Efforts to do so.**

4.2 Award of Contract shall be conditioned upon satisfaction of the requirements set forth herein.

4.3 The Form of Proposal includes a section entitled "Identification of Diverse Business Enterprise Subcontractors and Material Suppliers". The Advertisement for Bid includes a section entitled "Diverse Business Enterprise Participation". The Determination of Responsibility includes a section entitled "Participation of Diverse Business Enterprise owned contractors and businesses". The applicable information must be completed and submitted as outlined.

4.4 **Failure to submit this information as requested may be cause for rejection of the bid.**

PART 5 - DOCUMENTATION REQUIRED

5.1 The prime contractor must provide the University of Kentucky with a "DBE percent of contract report "detailing subcontracting activity within 90 days of prime contract award. Projects containing multiple bid packs will update reports within 90 days of contract award throughout project duration. The report shall reflect the total dollar amount awarded to all DBE subcontractors (including suppliers) utilized under this contract.

a. Prime Contractors will report the following items individually to satisfy reporting requirements
    i. Project Name, UK Project Number, and UK CPMD Project Manager assigned to the project
    ii. Total dollar value of the prime contract with the University of Kentucky
    iii. Total dollar value of all contracts assigned to DBE firms

5.2 Bidders not reaching the Goal must submit both the "DBE percent of contract report "and a written statement documenting their Good Faith Effort to do so (If bid includes no DBE participation, bidder shall enter "None" on the subcontractor / supplier form). In addition, the bidder may submit the following as proof of Good Faith Efforts to meet the Participation Goal:

A. Advertisement by the bidder of DBE Contracting opportunities associated with this bid in at least two (2) of the following:

   1. A periodical in general circulation throughout the region
   2. A Minority-Focused periodical in general circulation throughout the region
   3. A Trade periodical aimed at the DBE community in general circulation throughout the region
   4. Bidder shall include copies of dated advertisement with his submittal

B. Evidence of written notice of contracting opportunities to at least five (5) DBE firms serving the construction industry at least seven (7) days prior to the bid opening date.

C. Copies of quotations submitted by DBE firms which were not used due to uncompetitive pricing or other factors and/or copies of responses from firms that were contacted indicating that they would not be submitting a bid.

D. Documentation of Bidder's utilization of the agencies identified to help locate potential DBE firms for inclusion on the contract including responses from agencies.

E. Failure to submit any of the documentation requested in this section may be cause for rejection of bid. Bidders may include any other documentation deemed relevant to this requirement. "Record of DBE Solicitation" and other required documentation of Good Faith Efforts are to be submitted with the bid, if participation Goal is not met.

University of Kentucky – Capital Project Management
DBE Percent of Contract Report

1) Identification of Participating DBEs
   Project Name / Number: _____
   UK Project Manager: _____
   Total Contract Value: _____

DBE Name, Address & Phone	Work to be Performed	Dollar Value of Work	% Value of Total Contract
1.		$	%
2.		$	%
3.		$	%
4.		$	%

The undersigned submits the above list of DBE firms to be used in accomplishing the work contained in this Bid.

Company: _____ By: _____

Date: _____ Title: _____

University of Kentucky

Tree Protection Standards

010000S02 Tree Protection Standards

Dated: 05/2017
Applies to: All Projects
University of Kentucky

Article 56 is in addition to, and takes precedence over the provisions of the Special Conditions for the Project.

ARTICLE 56
PART 1 –GENERAL

56.1.1 SUMMARY

A. The scope of work includes all labor, materials, tools, equipment, facilities, transportation and services necessary for, and incidental to performing all operations in connection with protection of existing trees and other plants as shown on the drawings and as specified herein.

1. Provide preconstruction evaluations and Arborist Report.
2. Provide tree and plant protection fencing.
3. Provide protection of root zones and above ground tree parts and plants.
4. Provide pruning of existing trees and plants.
5. Provide all insect and disease control.
6. Provide maintenance of existing trees and plants including irrigation during the construction period as recommended by the Arborist Report.
7. Provide maintenance of existing trees and plants including irrigation during the post construction plant maintenance period.
8. Remove tree protection fencing and other protection from around and under trees and plants.
9. Clean up and disposal of all excess and surplus material.

56.1.2 CONTRACT DOCUMENTS

A. Shall consist of specifications, general conditions and the drawings. The intent of these documents is to include all labor, materials, and services necessary for the proper execution of the work. The documents are to be considered as one. Whatever is called for by any parts shall be as binding as if called for in all parts.

B. It is the intent of this section that the requirements apply to all sections of the project specification such that any subcontractor must comply with the restrictions on work within designated Tree and Plant Protection Areas.

56.1.3 RELATED DOCUMENTS AND REFERENCES

A. Related Documents:

1. Drawings and general provisions of contract including general and supplementary conditions and Division I specifications apply to work of this section.
2. Section -Planting Soil
3. Section -Irrigation
4. Section -Planting
5. Section –Lawn

B. References: The following specifications and standards of the organizations and documents listed in this paragraph form a part of the specification to the extent required by the references thereto. In the event that the requirements of the following referenced standards and specification conflict with this specification section the requirements of this specification shall prevail. In the event that requirements of any of the following referenced standards and specifications conflict with each other the more stringent requirement shall prevail.

1. ANSI A 300 (Part 5) – Standard Practices for Tree, Shrub and other Woody Plant Maintenance, Management of Trees & Shrubs During Site Planning, Site Development & Construction. Most current editions.
2. ANSI A 300 (Part 1) – Standard Practices for Tree, Shrub and other Woody Plant Maintenance, Pruning. Most current editions.
3. ANSI Z133 Safety Requirements for Arboricultural Operations.
4. Glossary of Arboricultural Terms, International Society of Arboriculture, Champaign IL, most current edition.

56.1.4 VERIFICATION

A. All scaled dimensions on the drawings are approximate. Before proceeding with any work, the Contractor shall carefully check and verify all dimensions and quantities, and shall immediately inform the Owner's Representative of any discrepancies between the information on the drawings and the actual conditions, refraining from doing any work in said areas until given approval to do so by the Owner's Representative.

56.1.5 PERMITS AND REGULATIONS

A. The Contractor shall obtain and pay for all permits related to this section of the work unless previously excluded under provision of the contract or general conditions. The Contractor shall comply with all laws and ordinances bearing on the operation or conduct of the work as drawn and specified. If the Contractor observes that a conflict exists between permit requirements and the work outlined in the contract documents, the Contractor shall promptly notify the Owner's Representative in writing including a description of any necessary changes and changes to the contract price resulting from changes in the work.

B. Wherever references are made to standards or codes in accordance with which work is to be performed or tested, the edition or revision of the standards and codes current on the effective date of this contract shall apply, unless otherwise expressly set forth.

C. In case of conflict among any referenced standards or codes or between any referenced standards and codes and the specifications, the more restrictive standard shall apply or Owner's Representative shall determine which shall govern.

56.1.6 PROTECTION OF WORK, PROPERTY AND PERSON

A. The Contractor shall protect the work, adjacent property, and the public, and shall be responsible for any damages or injury due to his/her actions.

56.1.7 CHANGES IN THE WORK

A. The Owner's Representative may order changes in the work, and the contract sum should be adjusted accordingly. All such orders and adjustments plus claims by the Contractor for extra compensation must be made and approved in writing before executing the work involved.

56.1.8 DEFINITIONS

All terms in this specification shall be as defined in the "Glossary of Arboricultural Terms" or as modified below.

A. Owner's Representative: The person appointed by the Owner to represent their interest in the Tree and Plant Protection and approval of the work and to serve as the contracting authority with the Contractor. The Owner's Representative may appoint other persons to review and approve any aspects of the work.

B. Reasonable and Reasonably: When used in this specification is intended to mean that the conditions cited will not affect the establishment or long term stability, health or growth of the plant. This specification recognizes that plants are not free of defects, and that plant conditions change with time. This specification also recognizes that some decisions cannot be totally based on measured findings and that professional judgment is required. In cases of differing opinion, the Owner's Representative expert shall determine when conditions within the plant are judged as reasonable.

C. Shrub: Woody plants with mature height approximately less than 25 feet.

D. Tree and Plant Protection Area: Area surrounding individual trees, groups of trees, shrubs, or other vegetation to be protected during construction, and defined by a circle centered on the trunk with each tree with a radius equal to the crown dripline unless otherwise indicated by the owner's representative.

E. Tree: Single and multi-stemmed plants with anticipated mature height approximately greater than 25 feet or any plant identified on the plans as a tree.

56.1.9 SUBMITTALS

A. ARBORIST REPORT: Prior to the start of construction, submit, for approval by the Owner's Representative, the report of a consulting arborist who is a Registered Consulting Arborist® (RCA) with American Society of Consulting Arborists or an ISA Board Certified Master Arborist, which details the following information for all trees to remain within the area designated on the drawings as the Tree and Plant Protection Area. The report shall include the following:

1. A description of each tree to protect indicating the following:
    a. Genus and species
    b. Condition including any visible damage to the root system or soil within the root zone
    c. Tree diameter at 4.5 feet above grade
    d. Tree height
    e. Crown width
    f. Any visible disease and/or insect infestations
    g. Branch and/or trunk structural deficiencies.
    h. Appraisal of value
    i. Appraisal of benefits (storm water interception, heating/cooling, carbon sequestration)
2. The report shall note all trees or parts of trees, which are considered a hazard or significant or extreme risk level. Include the International Society of Arboriculture Tree Risk Assessment evaluation sheet for each tree, which may reasonably be identified as a potential hazard tree.
3. Recommendations as to treatment of all insect, disease and structural problems encountered.
4. Recommendations for fertilizer treatments, if any.
5. A plan of the site showing the location of all trees included in the report.

B. PRODUCT DATA: Submit manufacturer product data and literature describing all products required by this section to the Owner's Representative for approval. Provide submittal four weeks before the start of any work at the site.

C. QUALIFICATIONS SUBMITTAL: For each applicable person expected to work on the project, provide copies of the qualifications and experience of the Consulting Arborist, proof of either the registered Consulting Arborist® (RCA) with American Society of Consulting Arborists or an ISA Board Certified Master Arborist and any required Herbicide/Pesticide license to the Owner's Representative, for review prior to the start of work.

56.1.10 OBSERVATION OF THE WORK

A. The Owner's Representative may inspect the work at any time.

56.1.11 PRE-CONSTRUCTION CONFERENCE

A. Schedule a pre-construction meeting with the Owner's Representative at least seven (7) days before beginning work to review any questions the Contractor may have regarding the work, administrative procedures during construction and project work schedule.

1. The following Contractors shall attend the preconstruction conference:

a. General Contractor.

b. Consulting Arborist.

c. Subcontractor assigned to install Tree and Plant Protection measures.

d. Earthwork Contractor.

e. All site utility Contractors that may be required to dig or trench into the soil.

f. Landscape subcontractor.

g. Irrigation subcontractor

B. Prior to this meeting, mark all trees and plants to remain and or be removed as described in this specification for review and approval by the Owner's Representative.

56.1.12 QUALITY ASSURANCE

A. Contractor qualifications:

1. All pruning, branch tie back, tree removal, root pruning, and fertilizing required by this section shall be performed by or under the direct supervision of an ISA Certified Arborist. Submit aforementioned individual's qualifications for approval by the Owner's Representative.

2. All applications of pesticide or herbicide shall be performed by a person maintaining a current state license to apply chemical pesticides valid in the jurisdiction of the project. Submit copies of all required state licensing certificates including applicable chemical applicator licenses.

56.1.13 DAMAGE OR LOSS TO EXISTING PLANTS TO REMAIN

A. Specimen trees within or adjacent to construction areas will be identified by the Owner's Representative and the Architect, and marked with green tags. Loss of any of these trees will result in fines assessed at a minimum of $10,000 (or higher appraised amount that may be determined by the University prior to construction) per tree. Damage to all other trees on the property will be assessed at the rate of $200 per diameter inch of the tree measured 4.5' above grade.

B. Any trees or plants designated to remain and which are damaged by the Contractor shall be replaced in kind by the Contractor at their own expense in addition to fines and penalties.

Tree(s) shall be replaced with a tree(s) of similar species and equivalent trunk diameter to the tree(s) being replaced. For example, if a 20" diameter tree is to be replaced, the Contractor can provide ten (10) two inch diameter trees. Depending on site accommodations and landscape design, the replacement trees may be installed outside of the project site as directed by the Owner's Representative. Shrubs shall be replaced with a plant of similar species and equal size or the largest size plants reasonably available whichever is less. Where replacement plants are to be less than the size of the plant that is damaged, the Owner's Representative shall approve the size and quality of the replacement plant.

1. All trees and plants shall be installed per the requirements of Specification Section Planting.

C. Plants that are damaged shall be considered as requiring replacement or appraisal in the event that the damage affects more than 25 % of the crown, 25% of the trunk circumference, or root protection area, or the tree is damaged in such a manner that the tree could develop into a potential hazard. Trees and shrubs to be replaced shall be removed by the Contractor at his own expense.

1. The Owner's Representative may engage an independent arborist to assess any tree or plant that appears to have been damaged to determine their health or condition.

D. Any tree that is determined to be dead, damaged or potentially hazardous by the Owner's arborist and upon the request of the Owner's Representative shall be immediately removed by the Contractor at no additional expense to the owner. Tree removal shall include all clean-up of all wood parts and grinding of the stump to a depth sufficient to plant the replacement tree or plant, removal of all chips from the stump site and filling the resulting hole with topsoil.

E. Any remedial work on damaged existing plants recommended by the Consulting Arborist shall be completed by the Contractor at no cost to the owner. Remedial work shall include but is not limited to: soil compaction remediation and vertical mulching, pruning and or cabling, insect and disease control including injections, compensatory watering, additional mulching, and could include application tree growth regulators (TGR). Any remedial work is to be performed by an ISA Certified Arborist, ISA Board Certified Master Arborist or a Registered Consulting Arborist.

F. Remedial work may extend up to two years following the completion of construction to allow for any requirements of multiple applications or the need to undertake applications at required seasons of the year.

56.1.14 LOSS OF TREES DUE TO CONSTRUCTION FOOT PRINT

A. Any trees or plants designated as removals to accommodate construction shall be replaced. Tree(s) shall be replaced with a tree(s) of similar species and equivalent trunk diameter to the tree(s) removed. For example, if a 20" diameter tree is removed, the Contractor can provide ten (10) two inch diameter trees. Depending on site accommodations and landscape design, the replacement trees may be installed outside of the project site as

directed by the Owner's Representative. Shrubs shall be replaced with a plant of similar species and equal size or the largest size plants reasonably available whichever is less.

PART 2 –PRODUCTS

56.2.1 MULCH

The coarse grade Mulch specified here is considered superior for its water retention and soil building properties in areas of tree and shrub roots when irrigation is drip, bubblers or flood methods.

A. Mulch shall be coarse, ground, from tree and woody brush sources. The minimum range of fine particles shall be 3/8 inch or less in size and a maximum size of individual pieces shall be approximately 1 to 1-1/2 inch in diameter and maximum length of approximately 4 to 8 inches. No more that 25% of the total volume shall be fine particles and no more than 20% of total volume be large pieces. Mulch will be applied to a depth of 3 to 5 inches. Mulch shall not come into contact with the tree trunk.

1. It is understood that Mulch quality will vary significantly from supplier to supplier and region to region. The above requirements may be modified to conform to the source material from locally reliable suppliers as approved by the Owner's Representative.

B. Submit supplier's product data that product meets the requirements and two-gallon sample for approval.

56.2.2 WOOD CHIPS

A. Wood Chips from an arborist chipping operation with less than 20% by volume green leaves. Chips stockpiled from the tree removal process may be used. Mulch will be applied to a depth of 5 to 8 inches. Mulch shall not come into contact with the tree trunk.

56.2.3 TREE PROTECTION FENCING

A. Chain link fencing shall be installed around all existing trees to remain. Fencing shall be 6' tall galvanized nine gauge, with 3" end and line post and 1" minimum top rails, and bottom tension wire a maximum of 3" off the ground. Post shall be driven into the ground and spacing shall not exceed 8 feet.

6 feet tall metal chain link fence set in metal frame panels on movable core drilled concrete blocks of sufficient size to hold the fence erect in areas of existing paving to remain.

B. Orange plastic fencing shall be installed on the outside of the chain link fencing to provide high visibility.

C. GATES: For each fence type and in each separate fenced area, provide a minimum of one 3-foot-wide gate. Gates shall be lockable. The location of the gates shall be approved by the Owner's Representative.

D. Submit supplier's product data that product meets the requirements for approval.

56.2.4 TREE PROTECTION SIGN

A. Heavy-duty laminated or all weather signs, 11 inches x 17 inches, white colored background with black 2 inch high or larger block letters. The signs shall be attached to the tree protection fence every 50 feet. The tree protection sign shall read:

"Tree Protection Area - Keep Out"

The following information shall also be included on the sign:

i. Genus and species
ii. Tree diameter
iii. Tree height
iv. Appraised value of tree
v. Benefits provided
    1. Storm water interception in gallons
    2. Carbon sequestration in pounds
    3. Energy Savings

56.2.5 TREE (Plant) GROWTH REGULATOR (TGR/PGR)

A. Active ingredient Paclobutrazol i.e. (ShortStop, Cambistat 25C, Profile 2SC or other)

B. Submit supplier's product data that product meets the requirements for approval.

56.2.6 SOIL & ROOT PROTECTION

On projects where the tree protection fencing cannot be installed to create the desired protection zone.

A. Matting for vehicle and work protection shall be heavy duty matting designed for vehicle loading over tree roots, Alturnamats as manufactured by Alturnamats, Inc. Franklin, PA 16323 or approved equal.

B. 1/2"Steel plates - Following the recommendations of the project arborist steel plates shall be installed to protect the roots from Construction activities.

C. Submit suppliers' product data that product meets the requirements for approval.

56.2.7 GEOGRID

A. Geogrid shall be woven polyester fabric with PVC coating, Uni-axial or biaxial geogrid, inert to biological degradation, resistant to naturally occurring chemicals, alkalis, acids.

Manufacturers: GSE Environmental, TenCate, Terram

B. Submit suppliers' product data that product meets the requirements for approval.

56.2.8 GEOTEXTILE

A. Geotextile shall be nonwoven polypropylene fibers, inert to biological degradation and resistant of naturally occurring chemicals, alkalis and acids.

Manufacturers: GSE Environmental, TenCate, Terram

B. Submit supplier's product data that product meets the requirements for approval.

PART 3 –EXECUTION

56.3.1 SITE EXAMINATION

A. Examine the site, tree, plant and soil conditions. Notify the Owner's Representative in writing of any conditions that may impact the successful Tree and Plant Protections that is the intent of this section.

56.3.2 COORDINATION WITH PROJECT WORK

A. The Contractor shall coordinate with all other work that may impact the completion of the work.

B. Prior to the start of Work, prepare a detailed schedule of the work for coordination with other trades.

C. Coordinate the relocation of any irrigation lines currently present on the irrigation plan, heads or the conduits of other utility lines or structures that are in conflict with tree locations. Root balls shall not be altered to fit around lines. Notify the Owner's Representative of any conflicts encountered.

56.3.3 TREE AND PLANT PROTECTION AREA

A. The Tree and Plant Protection Area is defined as all areas indicated on the tree protection plan. Where no limit of the Tree and Plant Protection area is defined on the drawings, the limit shall be the drip line (outer edge of the branch spread) of each tree.

56.3.4 PREPARATION

A. Prior to the preconstruction meeting, layout the limits of the Tree and Plant Protection Area and then alignments of required Tree and Plant Protection Fencing and root pruning. Obtain the Owner's Representative's approval of the limits of the protection area and the alignment of all fencing and root pruning.

B. Flag all trees and shrubs to be removed by wrapping blue plastic ribbon around the trunk and obtain the Owner's Representative's approval of all trees and shrubs to be removed prior to the start of tree and shrub removal. After approval, mark all trees and shrubs to be removed with blue paint in a band completely around the base of the shrub(s) and around the trunk of the tree(s) 4.5 feet above the ground.

C. Flag all trees and shrubs to remain with green plastic ribbon tied completely around the trunk or each tree and on a prominent branch for each shrub. Obtain the Owner's Representative's approval of all trees and shrubs to remain prior to the start of tree and shrub removal.

D. Prior to any construction activity at the site including utility work, grading, storage of materials, or installation of temporary construction facilities, install all tree protection fencing, Geotextile Fabric, silt fence, tree protection signs, Geogrid, Mulch and or Wood Chips as shown on the drawing.

56.3.5 SOIL MOISTURE

A. Volumetric soil moisture level, in all soils within the Tree and Plant Protection Area shall be maintained above permanent wilt point to a depth of at least 8 inches. No soil work or other activity shall be permitted within the Tree and Plant Protection Area when the volumetric soil moisture is above field capacity. The permanent wilt point and field capacity for each type of soil texture shall be defined as follows (numbers indicate percentage volumetric soil moisture).

Soil Type	Permanent wilt point v/v	Field Capacity v/v
Sand, Loamy sand, Sandy Loam	5-8%	12-18%
Loam, Sandy clay, Sandy clay loam	14-25%	27-36%
Clay loam, Silt loam	11-22%	31-36%
Silty clay, Silty clay loam	22-27%	38-41%

1. Volumetric soil moisture shall be measured with a digital, electric conductivity meter. The meter shall be the Digital Soil Moisture Meter, DSMM500 by General Specialty Tools and Instruments, or approved equivalent meter.

B. The Contractor shall confirm the soil moisture levels with a moisture meter. If the moisture is too high, suspend operations until the soil moisture drains to below field capacity.

56. 3.6 ROOT PRUNING

A. Prior to any excavating into the existing soil grade within 25 feet of the limit of the Tree and Plant Protection Area or trees to remain, root prune all existing trees to a depth of 24 inches below existing grade in alignments following the edges of the Tree and Plant Protection Area or as directed by the Owner's Representative. Root pruning shall be in conformance with ANSI A300 Root Management Standard (part 8) latest edition.

1. Using an air excavation tool to expose roots within 2 feet of the limit of grading.

2. After completion of excavation, make clean cuts with a lopper, saw or pruner to sever roots so they will not be torn, ripped or damaged by the excavation, and backfill the trench immediately with existing soil, filling all voids.

56.3.7 INSTALLATION OF GEOGRIDS, GEOTEXTILE FABRICS, MATTING, WOOD CHIPS AND OR MULCH

A. Install geogrids, geotextile fabric, matting, wood chips and or mulch in areas and depths shown on the plans and details or as directed by the Owner's representative. In general, it is the intent of this specification to provide the following levels of protection:

1. All areas within the Tree and Plant Protection area provide a minimum of 5 inches of wood chips or mulch.

2. Areas where foot traffic or storage of lightweight materials is anticipated to be unavoidable provide a layer of Filter Fabric under the 5 inches of wood chips or mulch.

3. Areas where occasional light vehicle traffic is anticipated to be unavoidable, provide approved matting or a layer of geogrids under 8 inches of wood chips or mulch.

4. Areas where heavy vehicle traffic is unavoidable provide approved matting or a layer of geogrids under 8 -12 inches of wood chips or mulch and a layer of matting over the wood chips or mulch.

B. The Owner's Representative shall approve the appropriate level of protection.

C. In the above requirements, light vehicle is defined as a track skid steer with a ground pressure of 4 psi or lighter. A heavy vehicle is any vehicle with a tire or track pressure of greater than 4 psi. Lightweight materials are any packaged materials that can be physically moved by hand into the location. Bulk materials such as soil, or aggregate shall never be stored within the Tree and Plant Protection Area.

56.3.8 PROTECTION

A. Protect the Tree and Plant Protection Area at all times from compaction of the soil; damage of any kind to trunks, bark, branches, leaves and roots of all plants; and contamination of the soil, bark or leaves with construction materials, debris, silt, fuels, oils, and any chemicals substance. Notify the Owner’s Representative of any spills, compaction or damage and take corrective action immediately using methods approved by the Owner’s Representative.

56.3.9 GENERAL REQUIREMENTSAND LIMITATIONS FOR OPERATIONS WITHIN THE TREE AND PLANT PROTECTION AREA:

A. The Contractor shall not engage in any construction activity within the Tree and Plant Protection Area without the approval of the Owner's Representative including: operating, moving or storing equipment; storing supplies or materials; locating temporary facilities including trailers or portable toilets and shall not permit employees to traverse the area to access adjacent areas of the project or use the area for lunch or any other work breaks. Permitted activity, if any, within the Tree and Plant Protection Area may be indicated on the drawings along with any required remedial activity as listed below.

B. In the event that construction activity is unavoidable within the Tree and Plant Protection Area, notify the Owner's Representative and submit a detailed written plan of action for approval. The plan shall include: a statement detailing the reason for the activity including why other areas are not suited; a description of the proposed activity; the time period for the activity, and a list of remedial actions that will reduce the impact on the Tree and Plant Protection Area from the activity. Remedial actions shall include but shall not be limited to the following:

1. In general, demolition and excavation within the drip line of trees and shrubs shall proceed with extreme care either by the use of hand tools, directional boring and or air excavation where indicated or with other low impact equipment that will not cause damage to the tree, roots or soil.

2. When encountered, exposed roots, 1 inches and larger in diameter shall be worked around in a manner that does not break the outer layer of the root surface (bark). These roots shall be covered in Wood Chips and shall be maintained above permanent wilt point at all times. Roots one inch and larger in diameter shall not be cut without the approval of the Owner's Representative. Excavation shall be tunneled under these roots without cutting them. In the areas where roots are encountered, work shall be performed and scheduled to close excavations as quickly as possible over exposed roots.

3. Tree branches that interfere with the construction may be tied back or pruned to clear only to the point necessary to complete the work. Other branches shall only be removed when specifically indicated by the Owner's Representative. Tying back or trimming of all branches and the cutting of roots shall be in accordance with accepted arboricultural practices (ANSI A300, parts 1 and 8) and be performed by or direct under supervision of an ISA Certified Arborist.

4. Matting: Install temporary matting over the Wood Chips or Mulch to the extent indicated. Do not permit foot traffic, scaffolding or the storage of materials within the Tree and Plant Protection Area to occur off of the temporary matting.

5. Trunk Protection: Protect the trunk of each tree to remain by covering it with a ring of 8-foot-long 2-inch x 6 -inch planks loosely banded onto the tree with 3 steel bands.

Staple the bands to the planks as necessary to hold them securely in place. Trunk protection may be kept in place no longer than 12 months. If construction requires work near a particular tree to continue longer than 12 months, the steel bands shall be inspected every six months and loosened if they are found to have become tight.

6. Air Excavation Tool: If excavation for footings or utilities is required within the Tree and Plant Protection Area, air excavation tool techniques shall be used where practical or as designed on the drawings.

a. Remove the Wood Chips from an area approximately 18 inches beyond the limits of the hole or trench to be excavated. Cover the Wood Chips for a distance of not less than 15 feet around the limit of the excavation area with Filter Fabric, tarp plastic sheeting to protect the Wood Chips from silt. Mound the Wood Chips so that the plastic slopes towards the excavation.

b. Using a sprinkler or soaker hose, apply water slowly to the area of the excavation for a period of at least 4 hours, approximately 12 hours prior to the work so that the ground water level is at or near field capacity at the beginning of the work. For excavations that go beyond the damp soil, rewet the soil as necessary to keep soil moisture near field capacity.

c. Using an air excavation tool specifically designed and manufactured for the intended purpose, and at pressures recommended by the manufacturer of the equipment, fracture the existing soil to the shape and the depths required. Work at rates and using techniques that do not harm tree roots. Air pressure shall be a maximum of 90-100 psi.

i. The air excavation tool shall be either the “Air-Spade” as manufactured by Division of Guardair Corporation 47 Veterans Drive Chicopee, MA 01022 (800)-482-7324, or Supersonic Air Knife as manufactured by Easy Use Air Tools, Inc. Allison Park, Pa (866) 328-5723 or approved equal.

d. Using a commercial, high-powered vacuum truck if required, remove the soil from the excavation produced by the Air Knife excavation. The vacuum truck should generally operate simultaneously with the hose operator, such that the soil produced is picked up from the excavation hole, and the exposed roots can be observed and not damaged by the ongoing operation. Do not drive the vacuum truck into the Tree and Plant Protection Area unless the area is protected from compaction as approved in advance by the Owner’s Representative.

e. Remove all excavated soil and excavated wood chips, and contaminated soil at the end of the excavation.

f. Schedule the work so that foundations or utility work is completed immediately after the excavation. Do not let the roots dry out. Mist the roots several times during the day. If the excavated area must remain open overnight, mist the roots and cover the excavation with black plastic.

g. Dispose of all soil in a manner that meets local laws and regulations.

h. Restore soil within the trench as soon as the work is completed. Utilize soil of similar texture to the removed soil and lightly compact with hand tools. Leave soil mounded over the trench to a height of approximately 10% of the trench depth to account for settlement.

i. Restore any geogrids, filter fabric, wood chips or mulch and or matting that was required for the area.

56.3.10 GRADING AND FILLING AROUND TREES

A. Maintain existing grade within drip line of trees. Any variance to this will be executed only after consultation and recommendation from the Campus Arborist.

B. Where existing grade is above new finish grade shown around trees, carefully hand excavate within drip line to new grade. Cut exposed roots approximately 3" below elevation of new finish grade. Engage an ISA certified Arborist to recommend procedures to compensate for loss of roots and to provide initial services such as pruning of branches and stimulation of root growth. Provide subsequent maintenance during contract period as recommended by the arborist. Provide Grounds Superintendent with typed instructions for recommended long range maintenance procedures to be followed after completion of construction operations.

C. For minor fills where the existing grade is 4" or less below elevation of finish grade shown, use a topsoil type fill material rich in organic matter and loamy in texture. Place in single layers not more than two inches at a time and do not compact.

D. Fills greater than four inches shall only be attempted after consultation with the Campus Arborist. Detailed shop drawings of proposed work shall be submitted and approved by the Campus Arborist prior to any work. A progress schedule shall be established to monitor the work.

56.3.11 TREE REMOVAL:

A. Tree removals shall be performed by ISA Certified Arborists and companies shall have appropriate licenses and insurance for tree removal operations.

B. Remove all trees indicated by the drawings and specifications, as requiring removal, in a manner that will not damage adjacent trees or structures or compacts the soil.

C. Remove trees that are adjacent to trees or structures to remain, in sections, to limit the opportunity of damage to adjacent crowns, trunks, ground plane elements and structures.

D. Do not drop trees with a single cut unless the tree will fall in an area not included in the Tree and Plant Protection Area and there are no underground utilities that may be damaged. No tree to be removed within 50 feet of the Tree and Plant Protection Area shall be pushed over or up-rooted using a piece of grading equipment.

E. Protect adjacent paving, soil, trees, shrubs, ground cover plantings and understory plants to remain from damage during all tree removal operations, and from construction operations. Protection shall include the root system, trunk, limbs, and crown from breakage or scarring, and the soil from compaction.

F. Remove stumps and immediate root plate from existing trees to be removed. Grind trunk bases and large buttress roots to a depth of the largest buttress root or at least 18 inches below the top most roots whichever is less and over the area of three times the diameter of the trunk (DBH).

1. For trees where the stump will fall under new paved areas, grind roots to a total depth of 18 inches below the existing grade. If the sides of the stump hole still have greater than approximately 20% wood visible, continue grinding operation deeper and or wider until the resulting hole has less than 20% wood. Remove all wood chips produced by the grinding operation and back fill in 8 inch layers with controlled fill of a quality acceptable to the site engineer for fill material under structures, compacted to 95% of the maximum dry density standard proctor. The Owner's Representative shall approve each hole at the end of the grinding operation.

2. In areas where the tree location is to be a planting bed or lawn, remove all woodchips and backfill stump holes with planting soil as defined in Specification Section Planting Soil, in maximum of 12 inch layers and compact to 80-85% of the maximum dry density standard proctor.

G. Wood salvaged for up cycling will be identified by the Owner's Representative.

1. Sections of salvaged wood shall have a clean, flat cut across both ends.

2. Ends of wood sections shall be sealed with AnchorSeal after being cut and before being loaded. Branch cuts on the length of wood sections shall be sealed with AnchorSeal.

3. Care shall be taken when loading wood and logs not to damage the bark connection to the wood.

4. Wood and logs shall be stored so there is no contact with the ground. Wood and logs should be elevated from the ground by placing on cross beams of wood, concrete or steel. Wood and logs may also be stored on a gravel, concrete or asphalt pad.

56.3.12 PRUNING:

A. Within six months of the estimated date of substantial completion, prune all dead or hazardous branches larger than 2 inch in diameter from all trees to remain.

B. Implement all pruning recommendations found in the Arborist Report.

C. Prune any low, hanging branches and vines from existing trees and shrubs that overhang walks, streets and drives, or parking areas as follows:

1. Walks - within 7 feet vertically of the proposed walk elevation.

2. Parking areas - within 10 feet vertically of the proposed parking surface elevation.

3. Streets and drives - within 12 feet vertically of the proposed driving surface elevation.

D. All pruning shall be done in accordance with ANSI A300 (part 1), ISA BMP Tree Pruning (latest edition, and the "Structural Pruning: A Guide for the Green Industry", Edward Gilman, Brian Kempf, Nelda Matheny and Jim Clark, 2013 Urban Tree Foundation, Visalia CA.

E. Perform other pruning task as indicated on the drawings or requested by the Owner's Representative.

F. Where tree specific disease vectors require, sterilize all pruning tools between the work in individual trees.

56.3.13 TREE (Plant) GROWTH REGULATOR APPLICATION (TGR/PGR)

A. At the start of, or prior to, the construction contract period, treat all trees indicated on the Plan with Tree Growth Regulator at the recommended rates, time of year and methods indicated by the product distributor.

56.3.14 WATERING

A. The Contractor shall be fully responsible to ensure that adequate water is provided to all plants to be preserved during the entire construction period. Adequate water is defined to be maintaining soil moisture above the permanent wilt point to a depth of 8 inches or greater.

B. The Contractor shall adjust the automatic irrigation system, if available, and apply additional water, using hoses or water tanks as required.

C. Periodically test the moisture content in the soil within the root zone to determine the water content.

56.3.15 TURF AND WEED MAINTENANCE

A. Turf areas within the Tree and Plant Protection area shall be maintained in a manner that is consistent with University turf maintenance standards. This includes mowing, weed eating, edging, fertilization, weed control and leaf collection.

B. During the construction period, control any plants that seed in and around the fenced Tree and Plant Protection area at least three times a year.

1. All plants that are not shown on the planting plan or on the Tree and Plant Protection Plan to remain shall be considered as weeds.

C. At the end of the construction period provide one final mowing and weeding of the Tree and Plant Protection Area.

56.3.16 INSECT AND DISEASE CONTROL

A. Monitor all plants to remain for disease and insect infestations during the entire construction period. Provide all disease and insect control required to keep the plants in a healthy state using the principles of Integrated Plant Management (IPM). All pesticides shall be applied by a certified pesticide applicator.

56.3.17 CLEAN-UP

A. During tree and plant protection work, keep the site free of trash, pavements reasonably clean and work area in an orderly condition at the end of each day. Remove trash and debris in containers from the site no less than once a week.

1. Immediately clean up any spilled or tracked soil, fuel, oil, trash or debris deposited by the Contractor from all surfaces within the project or on public right of ways and neighboring property.

B. Once tree protection work is complete, wash all soil from pavements and other structures. Ensure that Mulch is confined to planting beds.

C. Make all repairs to grades, ruts, and damage to the work or other work at the site.

D. Remove and dispose of all excess Mulch, Wood Chips, packaging, and other material brought to the site by the Contractor.

56.3.18 REMOVAL OF FENCING AND OTHER TREE AND PLANT PROTECTION

A. At the end of the construction period or when requested by the Owner's Representative remove all fencing, Wood Chips or Mulch, Geogrids and Geotextile Fabric, trunk protection and or any other Tree and Plant Protection material.

END OF SECTION

University of Kentucky
Facilities Management
Office of the Vice President

225 Frank D. Peterson Service Bldg.
Lexington, KY 40506-0005
P: 859-257-5929
www.uky.edu

March 20, 2020

TO: UK Facilities Partners

FROM: Mary Vosevich
Vice President and Chief Facilities Officer

SUBJ: COVID-19 On-Site Work Rules

As we continue to navigate the challenges of the COVID-19 pandemic, we thank you for your continued support and partnership. While our goal is to maintain some sense of business continuity and keep work and projects moving forward as necessary, the safety of our students, patients and employees is paramount. We ask that you and your teams adhere, at a minimum, to the following on-site rules in support of the social distancing mandate and to ensure your safety and that of our community.

- Stay contained to your area that you are assigned
- Bring your lunch; eat lunch in your assigned area or go offsite
- Come to campus in clean clothes
- All employees should have some form of identification
- Check daily recommendations from CDC
- If you have been exposed to a known COVID-19 patient, you will be required to leave the premises and will not be allowed to work for the CDC recommended 14 days
- If you have been asked to self-isolate by any local or state public health department, you will be required to leave the premises and will not be allowed to return until you have self-isolated for the CDC recommended 14 days
- Follow any on-site screening processes
- Practice 'social distancing'
- Limit face-to-face contact

We sincerely appreciate your understanding and patience during this evolving situation. Many of you have already reached out with proactive plans, which is a testament to the dedication of your teams to the University of Kentucky. We will communicate new information and processes as they are available. Please keep your UK point of contact informed of any changes with your staff and don't hesitate to reach out with any questions or concerns.

HealthCare

CORONAVIRUS
VENDOR SCREENING

Safety is one of UK HealthCare's top priorities. UK Healthcare is monitoring events surrounding COVID-19, and we are following the Centers for Disease Control and Prevention guidelines to ensure the safety of all who enter our facility and to minimize the risk of transmission.

To protect the health of the people we serve, upon entering UK Healthcare facilities, we are requiring all vendors to screen electronically prior to entry.

DO ANY OF THE FOLLOWING APPLY?

- **Fever 100.0 or greater (self-reported)**
- New Cough (not associated with seasonal allergies)
- New Muscle Aches/Pain
- New Shortness of Breath
- New Sore Throat (not associated with seasonal allergies)
- Vomiting or Diarrhea
- Loss of Taste or Smell

Please use the QR code to complete the vendor / non-university of Kentucky employee screening prior to entering any UK facility.

Masks are also required prior to entry. Please attempt to bring a mask with you. If you do not have one you can obtain one at any main visitor/patient entry point.

THANK YOU FOR YOUR PATIENCE AND UNDERSTANDING.

MKTG-386

HealthCare

CORONAVIRUS
VENDOR SCREENING

Safety is one of UK HealthCare's top priorities. UK Healthcare is monitoring events surrounding COVID-19, and we are following the Centers for Disease Control and Prevention guidelines to ensure the safety of all who enter our facility and to minimize the risk of transmission.

To protect the health of the people we serve, upon entering UK Healthcare facilities, we are requiring all vendors to screen electronically prior to entry.

DO ANY OF THE FOLLOWING APPLY?

- **Fever 100.0 or greater (self-reported)**
- New Cough (not associated with seasonal allergies)
- New Muscle Aches/Pain
- New Shortness of Breath
- New Sore Throat (not associated with seasonal allergies)
- Vomiting or Diarrhea
- Loss of Taste or Smell

Please use the QR code to complete the vendor / non-university of Kentucky employee screening prior to entering any UK facility.

Masks are also required prior to entry. Please attempt to bring a mask with you. If you do not have one you can obtain one at any main visitor/patient entry point.

THANK YOU FOR YOUR PATIENCE AND UNDERSTANDING.

MKTG-386

NOTICE

September 2, 2021

On August 4, 2021 UK HealthCare announced our mandatory COVID vaccination for all providers, staff, trainees, learners, and those who work in UK HealthCare facilities. Religious beliefs and medical contraindications as defined by the Americans with Disabilities Act will be considered.

This notice is being sent to you as a clinical contractor and/or vendor of University of Kentucky ("UKHC").

All outside clinical contractors and vendors are asked to comply with UKHC's health requirements in order to continue providing services to UKHC. This mandate is effective September 15, 2021.

Given the COVID-19 pandemic, and the necessity of protecting patient, employee, and visitor safety, UKHC is requiring all employees and representatives of clinical contractors and vendors working on-site at UKHC to meet UKHC's COVID-19 mandate protocol. Therefore, UKHC will allow on-site only those individuals who either i) have completed the first vaccination against COVID-19, ii) are fully vaccinated against COVID-19 (i.e., will be two weeks past completing their complete COVID-19 vaccination series), or iii) received an exemption through the clinical contractor's/vendor's formal vaccine exemption process (see Appendix 1 for a sample COVID – 19 declination process and expected outcomes) from the COVID-19 vaccination requirement related to the individual's medical contraindications or a sincerely held religious belief.

We are requesting all clinical contractors and vendors take an active approach in supporting our requirements, validating vaccinations, declination status, and testing compliance where needed. We are relying on you to:

- Upload vaccination documentation into the Vendormate portal by September 15, 2021.
- If Vendormate is not utilized, ensure a process is developed to maintain compliance of vaccination and exemption status.
- Prior to the commencement of any new agency booking, provide to UKHC a list of staff assigned to UKHC. Said list shall identify which staff are vaccinated and which staff have received exemptions in order that proper planning and supervision of staff may occur.
- Acknowledge that those staff who are not vaccinated and received an approved exemption will be subject to additional measures to reduce possible transmission of COVID-19 (e.g., daily screening, regular testing). As of September 15, 2021, staff will need to complete weekly testing. All testing must be a PCR test and competed within 96 hours prior to visiting any UKHC clinical site. (Appendix 2)
- Secure appropriate authorization from staff before sharing their information with UKHC, relating to staffs' vaccination status and/or approved exemption from the COVID-19 vaccination requirement.
- **Acknowledge that those individuals who have not been fully vaccinated against COVID-19 or have not been exempted from the COVID-19 vaccination requirement and/or are not following appropriate testing measures will not be permitted to work at any UK HealthCare facility or building after September 15, 2021.**
- Communicate protocol requirements to individuals working within any UK HealthCare facility or building. This includes symptom screening expectations, wearing a mask and appropriate PPE and practicing social distancing. (https://covid-19.ukhc.org/wp-content/uploads/sites/121/2020/06/COVID-19-Screening-Protocol-for-Students-Learners.pdf).

    - Universal masking (across all UK HealthCare facilities) is required at all times except when eating or drinking. Cloth masks are not allowed for patient/family facing work.
    - **Screening for COVID-19 symptoms must be completed daily via the UK HealthCare web-based tool (https://app.mc.uky.edu/c19s/VendorScreener) or upon arrival to the**

facility. This is an OSHA requirement. Individuals who fail any portion (if they are following our screening) cannot work and will not be permitted into any of the UK HealthCare facilities until the issue is addressed and the individual is compliant with the UK HealthCare COVID-19 policies. Failure includes having 2 or more symptoms or a fever only.

    - Develop a process and maintain a record of employee acknowledgment and agreement to follow the guidelines which should be available upon request.
- Designate a responsible person/team to monitor compliance with vaccination, declination, testing requirements (if applicable), screening, masking, and social distancing. Reporting of status to adherence to the UK HealthCare protocols should be provided as needed on an on-demand basis.
- Identify an individual who we can communicate employee compliance via email and phone, if necessary.
- Develop a process for notification back to UKHC Infection Prevention and Control (IPAC) team if a student turns positive after an observation or rotation at UK HealthCare. These will need to be recorded, evaluated and action plan developed that would mitigate any potential exposures.

We thank you for your continued partnership and support.
Colleen Swartz, Vice President for Hospital Operations
Pete Gilbert, Senior Vice President and Chief Operations Officer
Mark Newman, MD, Executive Vice President for Health Affairs

For questions:

- For additional or specific questions related to these requirements please contact UKHC purchasing
- For COVID vaccination and screening requirement questions, please contact our IPAC department using at 859-323-6337.

Appendix 1

SAMPLE: COVID – 19 Declination Process and Outcome Expectations

<table>
<tr><th>Declination Request Reason</th><th>Additional Details</th><th>Outcome</th><th>Expectation for all unvaccinated persons in a UK HealthCare facility</th></tr>
<tr><td>Religious</td><td>Letter expressing sincerely held religious beliefs as to COVID-19 vaccine</td><td rowspan="4">Approved with education and access to vaccination resources</td><td rowspan="5">Daily health attestation screening;
Masking while in a UK HealthCare facility; and
Tier 4: weekly PCR testing
Tier 3: biweekly PCR testing
Tiers 2 and 1: no testing

*negative PCR test results in re-triggering of regular testing protocol until vaccination status updated or UK HealthCare moves out of high-level Tiers

**Positive PCR testing will place individual on “hold” until either 90 days post positive test, vaccination status updated, or UK HealthCare moves out of high-level Tiers</td></tr>
<tr><td rowspan="4">Medical</td><td>Documented anaphylaxis to previous dose of COVID-19 vaccine; or documented allergy to the vaccine or a component of the vaccine</td></tr>
<tr><td>Written letter from treating physician indicating medical contraindication or reasons they do not endorse vaccination for their patient</td></tr>
<tr><td>Pregnant or trying to become pregnant</td><td>Deferred until 6 weeks post-delivery with education and access to vaccination resources</td></tr>
<tr><td>Any other medical reasons, not specified by treating provider</td><td>Denied request, with education and access to vaccination resources; but provide the option to go back and re-request with “refusal” selected</td></tr>
</table>

Appendix 2

Any individuals who work on site in any UK HealthCare facility will be tested on this frequency if not vaccinated.

Under tier 4: weekly

Under tier 3: biweekly

Tiers 2 and 1: no testing

All testing must be PCR test only and completed per timing requirement outlined

Frequently asked questions

1. **Our agency no longer sends staff to UK HealthCare. How do I close this agreement?**
   In the event you no longer have staff at UK HealthCare, contact Paul Reister (Paul.reister@uky.edu).

2. **Where should I send my staff lists indicating vaccination and exemption status?**
   - If Vendormate is utilized, the staff must upload documentation via that system.
   - All other staff, provide the list(s) to your primary point of contact at UKHC

3. **Do I need to send you PRC testing results for those staff on an approved exemption?**
   No. Management and oversight of the PCR testing compliance should be validated by the agency. You will only need to send a notification (no more than 96 hours prior to the clinical rotation) via email indicating the exempt staff is approved for working within UKHC.

4. **Our staff are in the hospital on a weekly basis. How often will approved declination staff need to be tested?**
   Right now, PCR testing is required weekly.

5. **Could the testing frequency change?**
   Yes. We are monitoring case volumes and testing need daily. Appendix 2 lists the schedule.

6. **What notification is needed if a staff member turns positive after a shift at UK HealthCare?**
   Please contact the UK HealthCare Infection Prevention and Control Department by phone (859-323-6337) as soon as the information is known.

7. **For staff just starting their vaccination series, what is the deadline for completing and meeting the mandate protocol?**
   We understand there are different timeframes with each vaccine brand. To meet this protocol, staff must complete the first vaccination against COVID-19 by September 15. We are asking they complete the vaccine series as recommended by the manufacturer and CDC.

8. **Is there someone I can contact if I have questions about the declination process or working through a declination request?**
   A sample decision grid has been provided to support you (if you don't already have a process in place). You can also contact us at vaccinequestions@uky.edu. We will work to respond to you within one business day.

9. **Is UK HealthCare offering vaccinations to agency/vendor staff?**
   Yes. Vaccination against COVID-19 is now available for anyone age 12 and over. Vaccination is being offered by UK HealthCare free, and insurance is not required. Full details are available on our COVID-19 vaccination information website: https://ukhealthcare.uky.edu/covid-19/vaccine.

REQUIREMENTS COMMON TO ALL WORK CATEGORIES

PART 1 – GENERAL

1.1 RELATED DOCUMENTS

1. Drawings and general provisions of the Contract, including General Special Conditions and other Division 1 Specification Sections, apply to this Section.

1.2 GENERAL REQUIREMENTS

A. Contract and Bid

1. These General Requirements form a part of each Work Category work description, and they apply to each bidder's scope of work.

2. It is understood that the use of the terms Bidder, Contractor, Prime Contractor, Trade Contractor and Subcontractor within this description shall refer to the same entity, and it is the entity that enters into a contract with the Construction Manager (CM) as a successful Work Category Bidder.

3. If conflicts regarding the assignment of work exist between the drawing notes and/or other specification sections and this Work Category Description, this Work Category Description shall take precedence.

4. The Bidder, having become thoroughly familiar with the requirements, conditions and intent of the Contract Documents, and with all conditions affecting the performance and cost of the Work at the place where the Work is to be completed, and having fully inspected the site in all particulars, hereby proposes and agrees to fully perform and work within the time stated and in strict accordance with the Contract Documents, without claims for additional time or compensation.

5. Each subcontractor is responsible for knowing what Work has been assigned to any preceding or succeeding separate Contracts, as well as to other subcontracts within this Bid Package. No additional reimbursement or extensions of time will be allowed a subcontractor due to its lack of knowledge or understanding of the Work assigned to its subcontract or to any separate subcontract which may affect its Work. If applicable, documents for other Bid Packages are available for review in the CM's site office.

6. Except as may be specifically noted to the contrary in the Contract Documents, each subcontractor shall provide or cause to be provided, and shall pay for all labor, materials, equipment, tools, construction equipment and machinery, temporary utilities, transportation, testing, and all other facilities and services necessary for proper execution and completion of the Work of its Subcontract, whether temporary or permanent.

7. The Bidder's Lump Sum proposal INCLUDES all applicable sales and/or use taxes.

8. The Bidder agrees that upon written notice of the acceptance of its bid, the Bidder will arrange to meet with the CM within five (5) business days to review its bid and to execute the Subcontract. Executed Performance and Payment Bonds, if required, and all appropriate Insurance Certificates shall be delivered to the CM at the time of execution of the Subcontract. Failure to execute the Subcontract within ten (10) working days after receipt of the Subcontract may be considered a default under the obligation of the Bid Bond.

9. The Bidder shall include all costs for permits, fees, bonds, tap-in fees, assessments and inspections.

10. Trade contractors will be limited to **10% total mark-up** on all extra work proposals.

B. Scheduling

1. Each subcontractor shall include any premium time required to meet the project schedule, as well as for any work which impacts Owner operations (i.e. utility tie-ins, shutdowns, or blocking deliveries).

2. Subcontractors will be provided the durations as shown on the project schedule for completion of each particular work item, however, sequencing and timing for each work item may be adjusted as needed by the CM.

3. The CM will issue a 4-6 week lookahead schedule at each weekly progress meeting (which all subcontractors are required to attend). All subcontractors will then review that lookahead, and provide a written three week lookahead schedule to the CM, indicating all activities that they will be doing for the next three weeks, and the labor required for each activity.

4. Durations shown on the project schedule are intended to include time for commissioning. Subcontractors will need to complete work to allow commissioning to occur within the timeframe allotted for each activity.

5. In the event that the work by this subcontractor falls behind the accepted schedule, the CM shall issue a notice in writing that the subcontractor is behind. If, within 3 days the subcontractor has not provided sufficient labor and/or materials to get back on schedule, the CM reserves the right to have this work completed by others at the subcontractor's expense.

C. Supervision

1. Each subcontractor shall provide a full-time Superintendent, on site, throughout the duration of their scope of work. This Superintendent shall be authorized to make all decisions relative to the work on site, shall attend daily foreman check-in meetings and shall be the primary contact for all correspondence. Any change of superintendent shall be pre-approved by the Construction Manager.

2. The Construction Manager reserves the right to have the subcontractor's superintendent or project manager replaced for any reason.

D. Administration

1. Each subcontractor is required to submit documents in PDF format if 11" X 17" or smaller and not bound. Any documents or drawings larger than 11" X 17" will require one PDF copy and one hard copy. If samples are required four (4) physical samples will be submitted at the time of review. All submittals shall be prepared and submitted in accordance with the submittal requirements outlined in the General and Special Conditions. One electronic copy of the submittals will be returned to the Subcontractor.

2. All Operation and Maintenance (O&M) specified in the documents to be provided shall be submitted to the CM on or before the expiration of 75% of the contract performance time.

3. Record drawings shall be updated on a weekly basis at the Construction Manager's jobsite office.

4. Each subcontractor shall have the capability of utilizing E-Comm. This is an internet based project collaboration and management software. This will include any training necessary to use ecommunication.

5. Drawings and revisions will be distributed electronically. The Subcontractor shall provide its superintendent with access to an ipad or other portable table device for access to internet based software from the jobsite.

6. Each subcontractor shall have an active e-mail account for the receipt of CM correspondence to the subcontractor.

7. Subcontractor Superintendents shall attend a daily 10-15 minute planning meeting every morning prior to beginning work.

8. Subcontractor Superintendents shall attend a weekly jobsite coordination meeting.

9. Every Friday, each subcontractor will be required to submit to the CM Superintendent, a three week lookahead planning schedule. This form will be provided by the CM.

10. All construction contracting companies doing work in Fayette County must obtain a Contractor Registration Certificate as well as a Business License. CM may request proof that subcontractor holds a current certificate and license prior to payment.

11. All subcontractors are required to meet the University of Kentucky's Design Standards for all work items. These standards are available for review on the UK website.

12. Any work done by field ticket shall be reviewed with, and signed by Congleton-Hacker Company's Superintendent within 24 hours, and pricing submitted within 30 days. Failure to follow either of these requirements shall void any monies due to the subcontractor for the added work.

E. Safety

1. Provide and maintain an effective safety program and conform to all Federal and Local safety codes.

2. All employees of all contractors, subcontractors or other entities who require access to the site are required to attend a pre-construction safety orientation meeting prior to starting work on site.

3. Hard hats, work boots, high visibility clothing, and long pants shall be worn by all employees at all times while on site.

4. All equipment operators and truck drivers on the site are required to wear hard hats, work boots, and long pants at all times, including in the cab while running equipment.

5. Any barricade or safety device removed by a subcontractor's employees in order to perform the work shall be immediately re-erected as soon as that work activity is complete. Temporary barricades and/or a controlled access zone must be established while the barricade is down. If the subcontractor fails to comply with this requirement, the CM or designee will cause the necessary work to be completed, and all associated costs will be deducted from costs due the subcontractor.

6. If any personnel are required to leave the site due to safety violations, it will be the responsibility of the subcontractor to provide additional manpower or work premium time to make up any lost time due to the safety violation.

F. Site Utilization

1. Each subcontractor shall confine its operations to the defined site limits and/or approved site lay down and storage areas. Any work activities that require work outside of the site limits shall be coordinated in advance with the Construction Manager.

2. Each subcontractor is responsible for its own hoisting, unloading, storage and subsequent moving of materials as required to complete its work. On-site storage locations of all materials, equipment, and operations must be coordinated with, and approved by, the Construction Manager in advance. Staging areas will be designated to each subcontractor. Any materials, equipment, or operations found to be outside approved staging areas are subject to relocation by the Subcontractor at the Construction Manager's discretion.

3. All costs associated with material delivery in small quantities, relocation of materials that impede work progress, and off site material storage and handling shall be included in the bid.

4. Each subcontractor is responsible for receiving all deliveries, unloading, hoisting, and transporting to staging areas approved by the Construction Manager

5. Each subcontractor shall provide temporary protection as required against rain, wind, storms and theft. Damages to existing facilities due to the Subcontractor's failure to provide temporary protection as required will be corrected at the Subcontractor's expense.

6. Fuel storage on-site is restricted and fueling procedures must comply with applicable regulations and receive the CM's approval.

7. Where new work connects with existing, provide all necessary cutting and fitting required to make a satisfactory connection with the work in a finished and workmanlike condition. Furnish all labor and material necessary, whether or not shown or specified. All measurements must be verified.

8. Each subcontractor shall be responsible for the proper protection of adjacent structures, public right-of-ways and emergency egresses while performing its scope of work.

9. Each subcontractor shall be responsible for the protection of its own materials, tools, equipment, and finished work until substantial completion is granted. Damage to stored or finished work and/or theft of any materials, tools or equipment prior to substantial completion shall be repaired or replaced at the Subcontractor's expense.

10. Each subcontractor is responsible for maintaining drainage and grades of the site, affected by their work, during and after their work.

11. Each subcontractor shall be responsible for furnishing, installing, maintaining, and removing weather protection required for their work.

12. Each subcontractor shall be responsible for cleaning their tires, and the tires of any of their delivery trucks prior to leaving the site.

13. Tobacco use on the site is prohibited.

14. Failure to clean up the site daily will result in the performance of this activity by the CM or a designated Trade Contractor at a unit rate of $75.00 per hour and associated costs shall be

back charged to the appropriate Trade Contractor. Cleanliness during construction is of utmost importance.

15. Temporary electric prior to establishing temporary electric inside the building shall be provided by each trade contractor for their own work.

16. All work shall be scheduled so that there are no shutdowns of existing utilities for more than 24 hours.

G. Coordination

1. Each trade contractor shall be responsible for coordinating with and scheduling the Owner's testing agency and the Owner's commissioning agent for testing & start-up activities, and shall notify the CM when these activities are scheduled.

2. Beginning work shall be deemed acceptance of the existing or preceding conditions.

3. A temporary gravel parking lot is located adjacent to the project site to be used for parking. Parking permits issued by the CM will be required to park in this lot. Parking is limited, and so the number of vehicles from each subcontractor allowed to park on site shall be determined by the CM.

4. Normal working hours will be from 7:00 A.M. to 3:30 P.M., Monday through Friday unless the Construction Manager approves alternate arrangements. Off-hours work must be scheduled in advance with the CM. This does not alleviate the Trade Contractor's responsibility to work overtime as required to maintain the schedule. Delays due to normal weather conditions are to be taken into consideration and anticipated when bidding this project. Saturdays are considered workdays as required to make up any weekdays lost due to weather.

5. Unless specifically indicated otherwise, each Trade Contractor is responsible for all detailed layout and grade from established benchmark and control lines

6. Temporary electric will be provided for finish work only. Temporary electric will not be provided for all exterior, structural, and rough carpentry work, nor will it be provided for anything over 110V.

7. The Trade Contractor shall provide and continually maintain OSHA compliant guardrails around the top of all open excavations, including shored excavations, with the required number and spacing of ladders for accessing the excavation.

8. Each Trade Contractor shall provide any and all information pertinent to their work required by other trade contractors to properly coordinate their work, and will be responsible for requesting the same as needed from other trade contractors.

9. All work required for mock-ups as specified shall be included in all trade bid packages.

University of Kentucky
Main Campus
Standard Fire Alarm Maintenance Procedure
(Temporary removal of Fire Alarm from service)

The following procedures shall be followed when a system is taken out of service for testing, maintenance, and renovation.

1. All requirements of NFPA 72 shall be followed.
2. Approval to remove a Fire Alarm system from service or to take a Fire Alarm out of service is restricted to regular, full time, University of Kentucky maintenance employees and those individuals granted owner authorization codes* by the PPD Manager of Electrical Services.

   ***Note 1:** Those without an owner authorization code will need to contact the person requesting/authorizing the work to obtain this code.

3. A request by telephone, 257-2830, or 2-way shall be made to the Delta Room dispatcher to remove a system from service by an approved individual. The Delta Room dispatcher shall note the location, owner authorization code, name, company and estimated time the system will be down and inform the person of the responsibilities outlined in item #5 of this procedure.

   ***Note 2:** THE PERSON WHO REQUESTS THE REMOVAL FROM SEVICE SHALL BE IN THE BUILDING AT ALL TIMES DURING THE OUT OF SERVICE PERIOD IN ORDER TO COMPLETE THE RESPONSIBILITIES OUTLINED IN ITEM #5.

4. The Delta Room dispatcher will notify the UK Police dispatcher and other assigned agencies, i.e. outside monitoring stations, that the building is out of service.
5. While out of service, any initiated alarm will result in a Fire Department response unless the person who removed the system from service notifies the Delta Room, immediately, that they initiated the alarm . (Note: It is not the Delta Room dispatchers duty to contact the person who took the system out of service.) *At 05:00 PM, unless further notification is given to the Delta Room dispatcher, all systems will automatically be put back into service.*

   5.1. Immediate Fire Department response is required in all instances of Fire Alarm notification. There shall be no delay. In instances where the cause of the alarm is positively proven to be false, a call* can be placed to the UK Police dispatcher to see if the Fire Department can be held.

   ***Note 3:** The authority to place a call to hold the Fire Department is limited to the University Fire Marshall and the Delta Room dispatcher.

   5.2. While "Out of Service", any call placed via 911 shall initiate a Fire Department response under the Fire Alarm Response Procedure.
   5.3. When a Fire Department response is required the Fire Alarm Response Procedure shall be followed.

6. If the justification for removing a Fire Alarm system from service is to perform work on the system itself, the Fire Alarm system shall be demonstrated to be reporting and functioning correctly, to the Delta Room dispatcher, before attempting to put the system in service.
7. When a system is put back in service, a request shall be made by telephone or 2-way to put a system back in service. (Note: The same person who took the system out of service shall return the system to service.)
8. The Delta Room dispatcher will notify the UK Police dispatcher and other assigned agencies, i.e. outside monitoring stations, that the system is back in service.

This procedure shall apply to all persons who remove a Fire Alarm System from service including, but not limited to: UKPPD personnel, Housing personnel, Ag maintenance, and contractors

Date of last approval: 03-20-03
Revised : 3/6/01 Galen Tolliver Submitted or approval 1/10/01

UK Indoor Track Site Logistics Plan

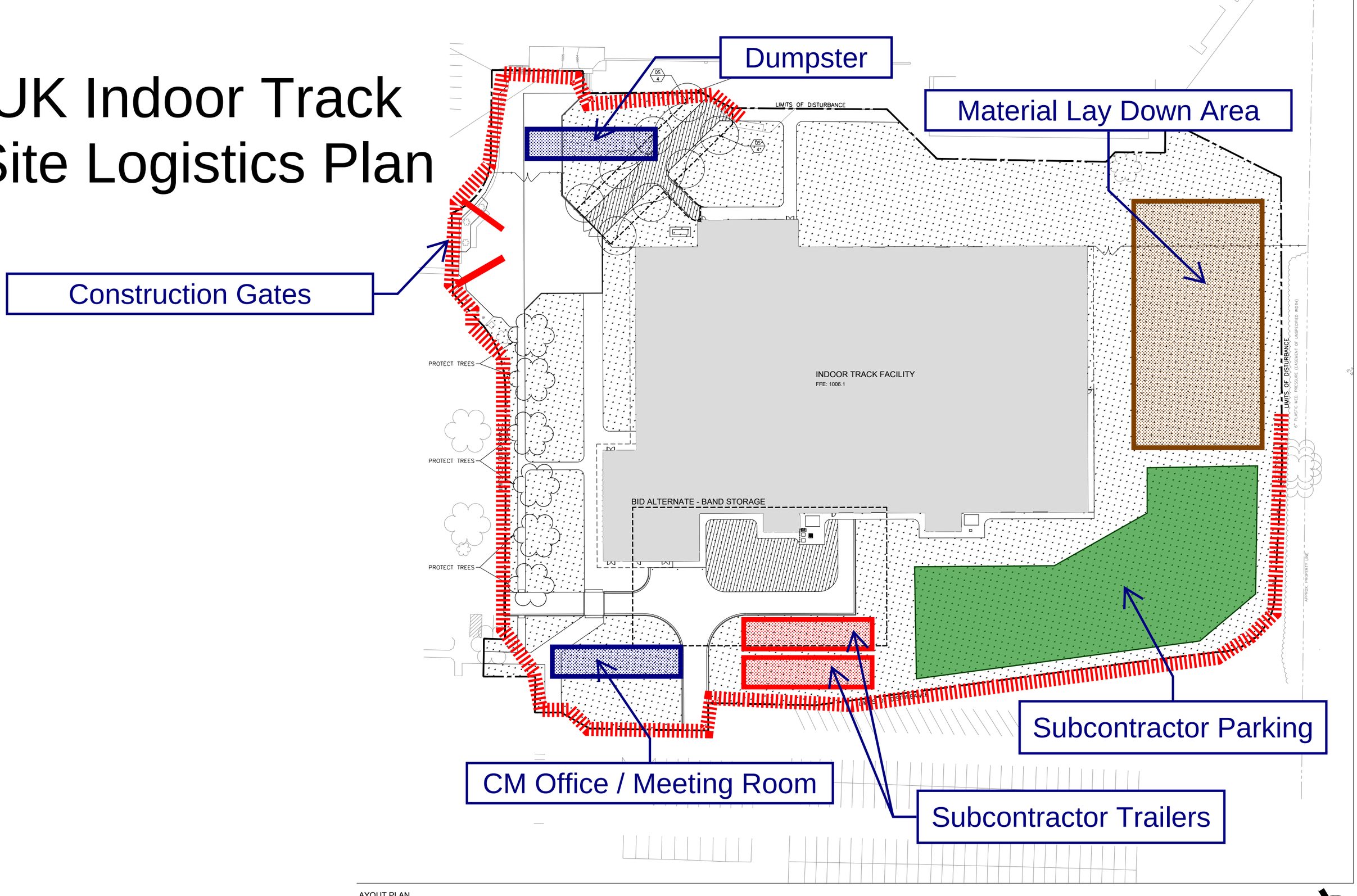

Project Schedule
Bid Date - September 28th, 2022

UK Indoor Track Facility

CONGLETON - HACKER CO.
Construction Managers / General Contractors

Activity Name	Original Duration	Start	Finish
RFP #01 - Track Surface RFP	307	08-Sep-22	13-Nov-23
Advertise Track RFP for bid	2	08-Sep-22	09-Sep-22
Bid Period	13	12-Sep-22	28-Sep-22
Pre-Bid Meeting	1	15-Sep-22	15-Sep-22
Track RFP Q&A Period	3	16-Sep-22	20-Sep-22
Addendum to Track RFP Issued	1	21-Sep-22	21-Sep-22
Award Track Contract	10	29-Sep-22	12-Oct-22
Track Design and Submittal Period	40	13-Oct-22	07-Dec-22
Review and Approve Track Submittal	10	08-Dec-22	21-Dec-22
Procurement and Fabricate Track	120	22-Dec-22	07-Jun-23
Metal Track Support Installation	30	11-Jul-23	21-Aug-23
Track Surface Installation	60	22-Aug-23	13-Nov-23
Field Event Installation	30	22-Aug-23	02-Oct-23
RFP #02 - PEMB RFP	217	08-Sep-22	10-Jul-23
Advertise PEMB RFP for bid	3	08-Sep-22	12-Sep-22
PEMB Bid Period	12	13-Sep-22	28-Sep-22
PEMB Pre-Bid Meeting	1	15-Sep-22	15-Sep-22
PEMB RFP Q&A Period	3	16-Sep-22	20-Sep-22
Addendum to PEMB RFP Issued	3	21-Sep-22	23-Sep-22
Award PEMB Contract	4	29-Sep-22	04-Oct-22
Design and Submittal Period	38	05-Oct-22	25-Nov-22
Review and Approve PEMB Submittals	10	28-Nov-22	09-Dec-22
PEMB Procurement and Fabrication	70	12-Dec-22	17-Mar-23
PEMB Erection	80	20-Mar-23	10-Jul-23
RFP #03 - Long Lead Electrical	284	08-Sep-22	11-Oct-23
Advertise LLE - RFP for bid	3	08-Sep-22	12-Sep-22
Long Lead Elect - Bid Period	12	13-Sep-22	28-Sep-22
Pre-Bid Meeting	1	15-Sep-22	15-Sep-22
Long Lead Elect - RFP Q&A Period	5	16-Sep-22	22-Sep-22
Addendum to LLE RFP Issued	2	16-Sep-22	19-Sep-22
Award LLE Contract	4	29-Sep-22	04-Oct-22
LLE Design and Submittal Period	15	05-Oct-22	25-Oct-22
LLE Review and Approve Submittals	10	26-Oct-22	08-Nov-22
LLE Procurement and Fabrications	225	09-Nov-22	20-Sep-23
LLE - Installation Period	15	21-Sep-23	11-Oct-23

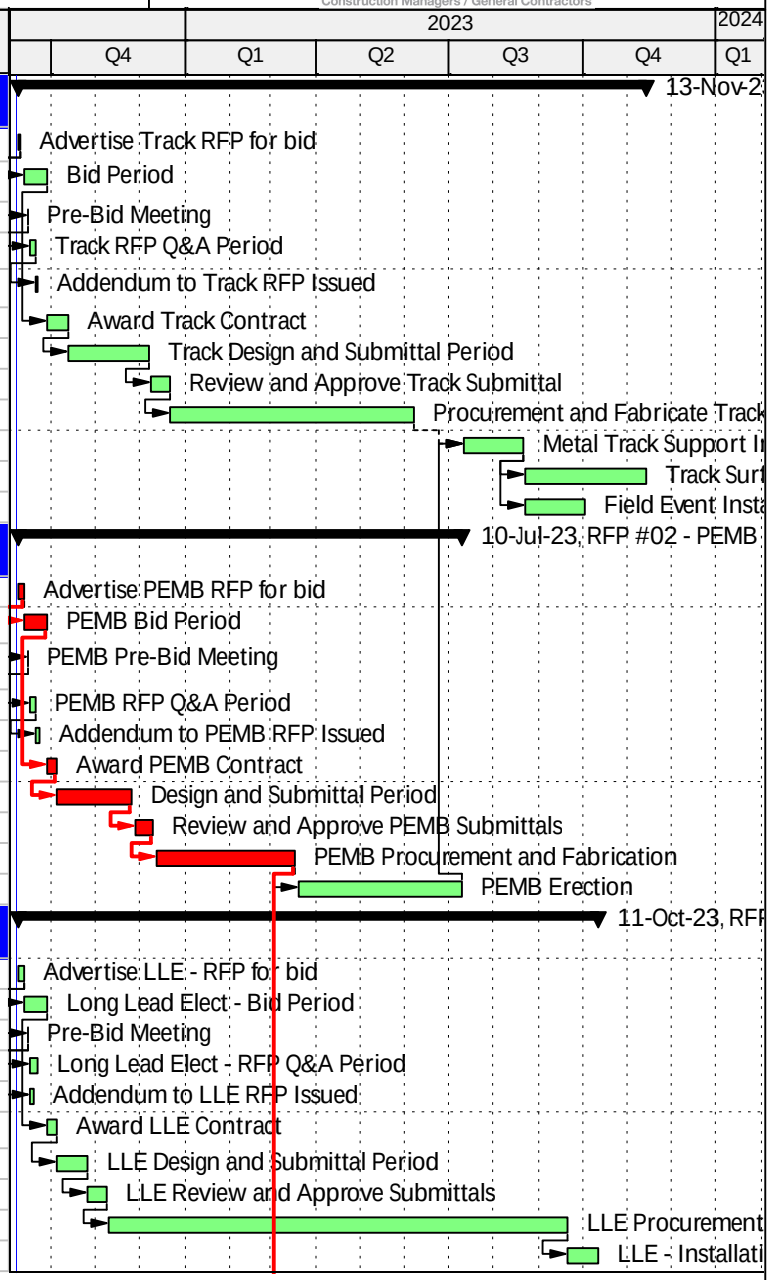

Actual Work
Critical Remaining Work
Remaining Work
Milestone

Project Schedule
Bid Date - September 28th, 2022

UK Indoor Track Facility

CONGLETON - HACKER CO.
Construction Managers / General Contractors

Activity Name	Original Duration	Start	Finish
Model of Procurement - Building anc	350	12-Aug-22 A	15-Dec-23
Demo existing stadium	3	12-Aug-22 A	28-Sep-22
Bid Package Design and Preparation	50	12-Aug-22 A	20-Oct-22
Advertise project for bid	1	21-Oct-22	21-Oct-22
Bid Period	20	21-Oct-22	17-Nov-22
Pre-Bid Conference	1	04-Nov-22	04-Nov-22
Bid Opening	1	24-Nov-22	24-Nov-22
Award Subcontracts	6	25-Nov-22	02-Dec-22
Mobilize for construction	10	05-Dec-22	16-Dec-22
Strip and Stockpile topsoil	5	19-Dec-22	23-Dec-22
Mass cut and fill	5	26-Dec-22	30-Dec-22
Strip / Spread Footings - Area A	10	02-Jan-23	13-Jan-23
Strip / Spread Footings - Area B	20	16-Jan-23	10-Feb-23
CIP Foundation Walls - Area A	5	16-Jan-23	20-Jan-23
CIP Foundation Walls - Area B	5	23-Jan-23	27-Jan-23
Below grade plumbing - Area A	5	30-Jan-23	03-Feb-23
Install Water Quality Structures	5	06-Feb-23	10-Feb-23
Below grade plumbing - Area B	5	06-Feb-23	10-Feb-23
Install Storm Manholes & Piping	10	13-Feb-23	24-Feb-23
Place / Finish Slab on Grade - Area A	10	13-Feb-23	24-Feb-23
Install sanitary manhole structures	5	27-Feb-23	03-Mar-23
Place / Finish Slab on Grade - Area B	10	27-Feb-23	10-Mar-23
Install sanitary sewer piping	10	06-Mar-23	17-Mar-23
Erect CMU walls - Area A	10	13-Mar-23	24-Mar-23
Erect PEMB steel columns - Area A	5	20-Mar-23	24-Mar-23
Erect CMU walls - Area B	10	27-Mar-23	07-Apr-23
Erect PEMB steel columns - Area B	5	27-Mar-23	31-Mar-23
Erect Entrance steel columns - Area A	5	03-Apr-23	07-Apr-23
Erect PEMB steel beams - Area A	5	03-Apr-23	07-Apr-23
Erect PEMB steel beams - Area B	5	10-Apr-23	14-Apr-23
Erect Entrance steel beams - Area A	5	10-Apr-23	14-Apr-23
Apply AVB at exterior walls - Area A	5	10-Apr-23	14-Apr-23
Install PEMB metal roof deck - Area A	2	17-Apr-23	18-Apr-23
Apply AVB at exterior walls - Area B	5	17-Apr-23	21-Apr-23
Erect Entrance steel beams - Area B	5	17-Apr-23	21-Apr-23
Install PEMB metal roof deck - Area B	2	19-Apr-23	20-Apr-23
Lay masonry veneer - Area A	15	24-Apr-23	12-May-23
Erect Entrance bar joists - Area A	5	24-Apr-23	28-Apr-23
Install Low Roof metal roof deck - Area A	2	01-May-23	02-May-23

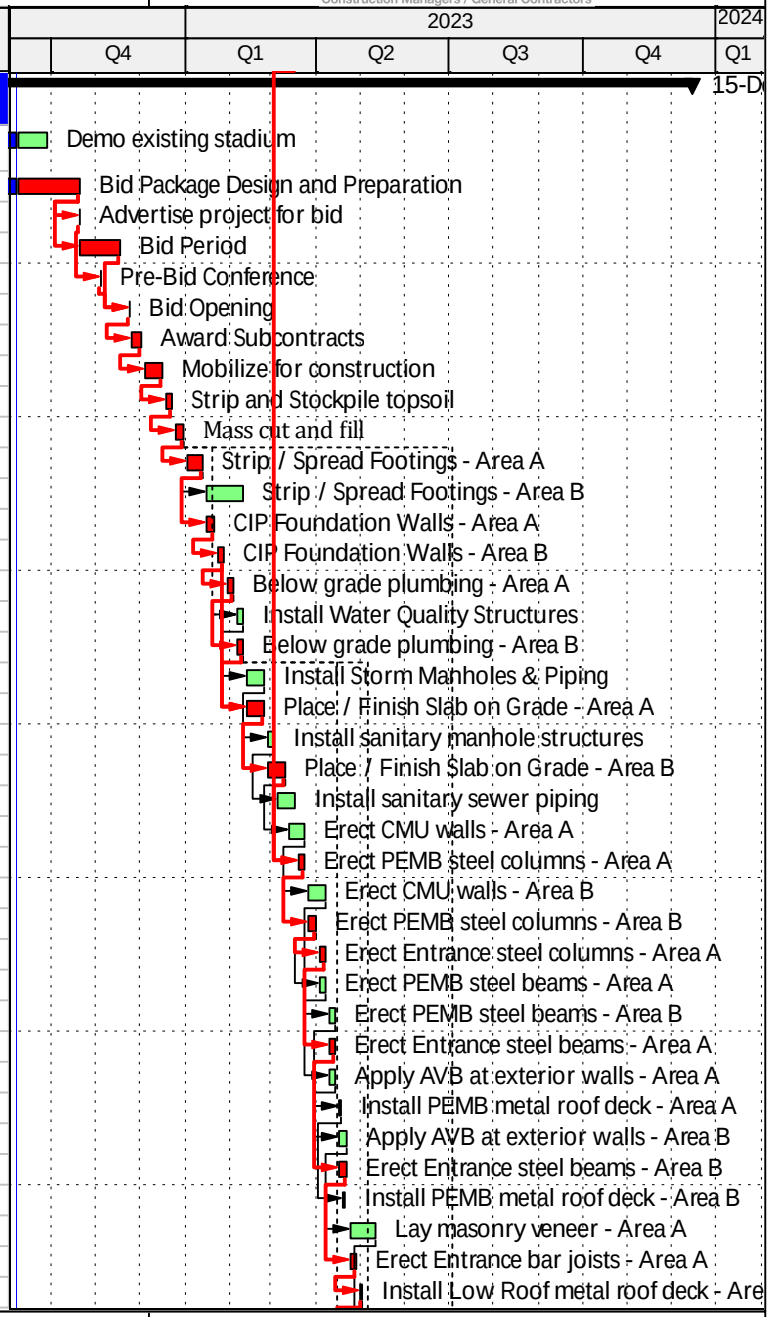

Actual Work
Critical Remaining Work
Remaining Work
Milestone

Project Schedule
Bid Date - September 28th, 2022

UK Indoor Track Facility

CONGLETON - HACKER CO.
Construction Managers / General Contractors

Activity Name	Original Duration	Start	Finish
Install PEMB metal wall panels - Area A	15	03-May-23	23-May-23
Above ceiling plumbing rough-in - Area A	15	03-May-23	23-May-23
Above ceiling sheetmetal rough-in - Area A	10	03-May-23	16-May-23
Lay masonry veneer - Area B	20	15-May-23	09-Jun-23
Above ceiling sheetmetal rough-in - Area B	10	17-May-23	30-May-23
Install PEMB metal wall panels - Area B	15	24-May-23	13-Jun-23
Fire sprinkler rough-in - Area A	15	24-May-23	13-Jun-23
Above ceiling plumbing rough-in - Area B	15	24-May-23	13-Jun-23
Concrete curb and gutter	5	24-May-23	30-May-23
Install CF Metal Stud Framing - Area A	10	14-Jun-23	27-Jun-23
Fire sprinkler rough-in - Area B	15	14-Jun-23	05-Jul-23
In-wall plumbing rough-in - Area A	20	14-Jun-23	12-Jul-23
Above ceiling electrical rough-in - Area A	20	14-Jun-23	12-Jul-23
Install entrance metal wall panels - Area A	15	28-Jun-23	19-Jul-23
Install CF Metal Stud Framing - Area B	10	28-Jun-23	12-Jul-23
Cut-in Sprinkler Heads - Area A	5	06-Jul-23	12-Jul-23
Apply ext gyp sheathing - Area A	5	13-Jul-23	19-Jul-23
Cut-in Sprinkler Heads - Area B	5	13-Jul-23	19-Jul-23
Set plumbing fixtures - Area A	5	13-Jul-23	19-Jul-23
Above ceiling electrical rough-in - Area B	15	13-Jul-23	02-Aug-23
Apply ext gyp sheathing - Area B	5	20-Jul-23	26-Jul-23
Test Sprinkler System	5	20-Jul-23	26-Jul-23
Fine Grading	5	20-Jul-23	26-Jul-23
Install roof membrane - Low roof - Area A	10	27-Jul-23	09-Aug-23
Install alum curtainwall framing - Area A	10	27-Jul-23	09-Aug-23
Frame int. light gauge metal stud walls - Area A	5	27-Jul-23	02-Aug-23
Install Synthetic running surface - Area A	20	27-Jul-23	23-Aug-23
Asphalt Aggregate Base Course	5	27-Jul-23	02-Aug-23
Install HM door frames - Area A	2	03-Aug-23	04-Aug-23
Frame int. light gauge metal stud walls - Area B	5	03-Aug-23	09-Aug-23
In-wall electrical rough-in - Area A	10	03-Aug-23	16-Aug-23
Asphalt Paving	5	03-Aug-23	09-Aug-23
Install alum curtainwall framing - Area B	10	10-Aug-23	23-Aug-23
Hang and finish interior gyp - Area A	5	10-Aug-23	16-Aug-23
Install HM door frames - Area B	2	17-Aug-23	18-Aug-23
Hang and finish interior gyp - Area B	5	17-Aug-23	23-Aug-23
Ext Soffit Support Framing - Area A	5	17-Aug-23	23-Aug-23
In-wall electrical rough-in - Area B	5	17-Aug-23	23-Aug-23
Install HM doors and Hdwr - Area A	5	21-Aug-23	25-Aug-23
Install alum. storefront framing - Area A	5	24-Aug-23	30-Aug-23

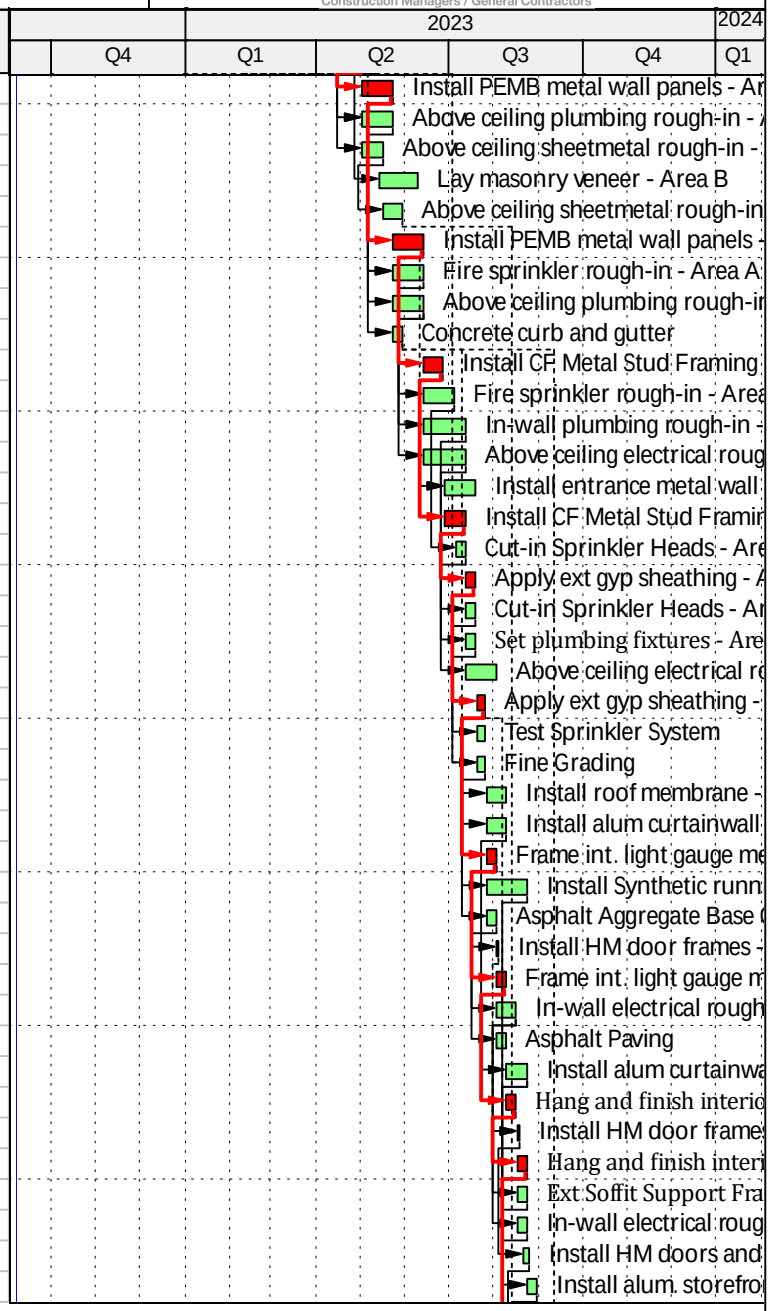

Actual Work
Critical Remaining Work
Remaining Work
Milestone

Project Schedule
Bid Date - September 28th, 2022

UK Indoor Track Facility

CONGLETON - HACKER CO.
Construction Managers / General Contractors

Activity Name	Original Duration	Start	Finish
Glaze curtainwall - Area A	10	24-Aug-23	06-Sep-23
Install Acoustical Ceiling Grid - Area A	5	24-Aug-23	30-Aug-23
Ext Soffit Support Framing - Area B	5	24-Aug-23	30-Aug-23
Prime walls - Area A	5	24-Aug-23	30-Aug-23
Pull Wire - Area A	5	24-Aug-23	30-Aug-23
Install Synthetic running surface - Area B	20	24-Aug-23	20-Sep-23
Install HM doors and Hdwr - Area B	5	28-Aug-23	01-Sep-23
Install alum. storefront framing - Area B	5	31-Aug-23	06-Sep-23
Drop Ceiling Acoust Ceiling Tiles - Area A	5	31-Aug-23	06-Sep-23
Install Metal Soffit - Area A	5	31-Aug-23	06-Sep-23
Prime walls - Area B	5	31-Aug-23	06-Sep-23
Install GRD's - Area A	5	31-Aug-23	06-Sep-23
Pull Wire - Area B	5	31-Aug-23	06-Sep-23
Install Overhead Coiling doors - Area A	4	04-Sep-23	07-Sep-23
Install Casework - Area A	5	07-Sep-23	13-Sep-23
Glaze alum. storefront - Area A	5	07-Sep-23	13-Sep-23
Glaze curtainwall - Area B	10	07-Sep-23	20-Sep-23
Install Metal Soffit - Area B	5	07-Sep-23	13-Sep-23
Lay and grout ceramic tile - Area A	5	07-Sep-23	13-Sep-23
Finish Paint - Area A	5	07-Sep-23	13-Sep-23
Install GRD's - Area B	5	07-Sep-23	13-Sep-23
Install light fixtures - Area A	5	07-Sep-23	13-Sep-23
Terminate Devices - Area A	5	07-Sep-23	13-Sep-23
Pull Communications cabling - Area A	5	07-Sep-23	13-Sep-23
Mount Data Racks - Area A	5	07-Sep-23	13-Sep-23
Install Overhead Coiling doors - Area B	4	08-Sep-23	13-Sep-23
Install Millwork and Trim - Area A	10	14-Sep-23	27-Sep-23
Glaze alum. storefront - Area B	5	14-Sep-23	20-Sep-23
Install Floor Covering - Area A	5	14-Sep-23	20-Sep-23
Finish Paint - Area B	2	14-Sep-23	15-Sep-23
Install Toilet partitions & bath access. - Area A	5	14-Sep-23	20-Sep-23
Install light fixtures - Area B	10	14-Sep-23	27-Sep-23
Terminate Devices - Area B	5	14-Sep-23	20-Sep-23
Terminate Comm Devices and Racks - Area A	5	14-Sep-23	20-Sep-23
Emergency Generator	5	14-Sep-23	20-Sep-23
Building Envelop Commissioning	10	18-Sep-23	29-Sep-23
Install Graphics - Area A	5	18-Sep-23	22-Sep-23
Install pipe and tube railings - Area A	5	21-Sep-23	27-Sep-23
Install alum. doors and hardware - Area A	5	21-Sep-23	27-Sep-23
Install Floor Covering - Area B	5	21-Sep-23	27-Sep-23

Actual Work
Critical Remaining Work
Remaining Work
Milestone

Project Schedule
Bid Date - September 28th, 2022

UK Indoor Track Facility

CONGLETON - HACKER CO.
Construction Managers / General Contractors

Activity Name	Original Duration	Start	Finish
Install window shades - Concourse Level - Area A	5	21-Sep-23	27-Sep-23
Install Graphics - Area B	5	25-Sep-23	29-Sep-23
Install pipe and tube railings - Area B	5	28-Sep-23	04-Oct-23
Install alum. doors and hardware - Area B	5	28-Sep-23	04-Oct-23
Concrete Paving	15	28-Sep-23	18-Oct-23
MEP Commissioning	5	02-Oct-23	06-Oct-23
Install Ornamental Fencing	5	19-Oct-23	25-Oct-23
Install Plant material	5	26-Oct-23	01-Nov-23
Install Sod	5	02-Nov-23	08-Nov-23
Final Architectural Punchlist	5	09-Nov-23	15-Nov-23
Substantial Completion	1	16-Nov-23	16-Nov-23
Final Completion	1	15-Dec-23	15-Dec-23

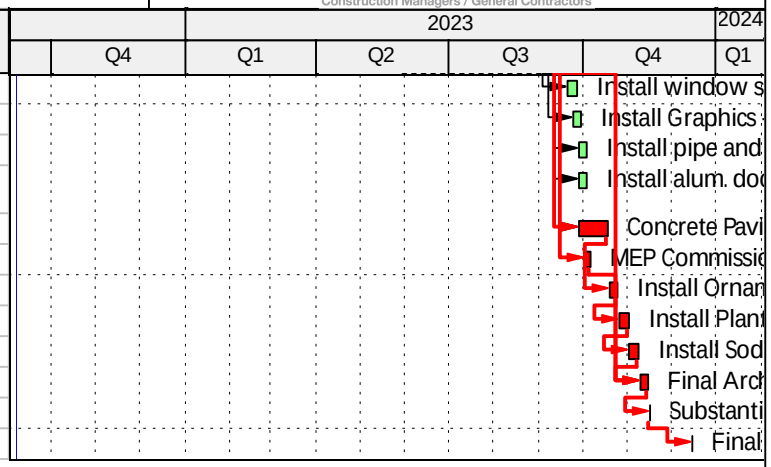

Actual Work
Critical Remaining Work
Remaining Work
Milestone